CITY OF HOUSTON

HOUSTON PUBLIC WORKS CAPITAL PROJECTS

LIFT STATION REHABILITATION AND RECONSTRUCTION DESIGN

(HEATHER RIDGE LIFT STATION, M.C.M.U.D. #58 LIFT STATION,
WILL CLAYTON LIFT STATION, SHADY MAPLES LIFT STATION,
BROOKDALE LIFT STATION)

WBS NO. R-000267-0178-3

60% SUBMITTAL

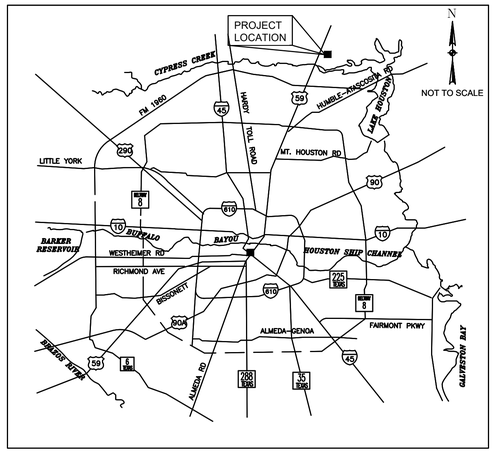

LOCATION MAP

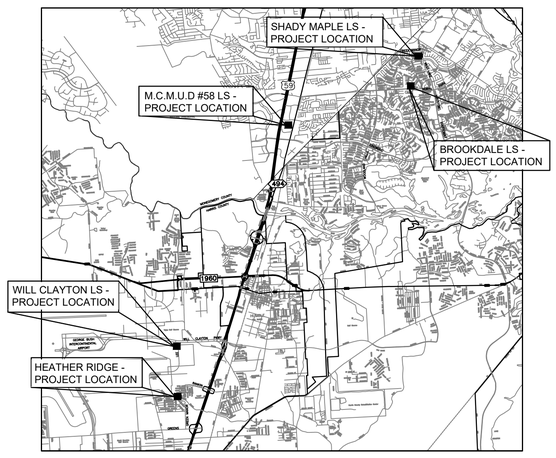

VICINITY MAP
KEY MAP NO 297N, 297S, 335H, 375A, 375J
COUNCIL DISTRICT B & E

MAYOR
JOHN WHITMIRE

CONTROLLER
CHRIS HOLLINS

DISTRICT COUNCIL MEMBERS

AMY PECK, DISTRICT A
TARSHA JACKSON, DISTRICT B
ABBIE KAMIN, DISTRICT C
CAROLYN EVANS–SHABAZZ, DISTRICT D
FRED FLICKINGER, DISTRICT E
TIFFANY D. THOMAS, DISTRICT F
MARY NAN HUFFMAN, DISTRICT G
MARIO CASTILLO, DISTRICT H
JOAQUIN MARTINEZ, DISTRICT I
EDWARD POLLARD, DISTRICT J
MARTHA CASTEX–TATUM, DISTRICT K

COUNCIL MEMBERS AT–LARGE

JULIAN RAMIREZ, POSITION 1
WILLIE DAVIS, POSITION 2
TWILA CARTER, POSITION 3
ALEJANDRA SALINAS, POSITION 4
SALLIE ALCORN, POSITION 5

rps A TETRA TECH COMPANY
Texas PE Firm Reg. #F-929
575 N. Dairy Ashford, Suite 700, Houston, Texas 77079
T +1 281 589 7257 E usinfrastructure@rpsgroup.com

ENGINEER'S SEAL

SURVEYED BY:
FB NO. F–4578

PARKS–FORESTRY DEPT.

METRO

HOUSTON WATER

TRANSPORTATION & DRAINAGE OPERATIONS

CAPITAL PROJECTS | SURVEY

CITY ENGINEER DATE

DIRECTOR OF HOUSTON PUBLIC WORKS DATE

FOR CITY OF HOUSTON USE ONLY

SHEET NO.	DRAWING NO.	SHEET TITLE
GENERAL		
1	G–1	COVER
2	G–2	SHEET INDEX
3	G–3	HCED REVIEW
4	G–4	ABBREVIATION
5	G–5	SYMBOLS
6–7	G–6 – G–7	GENERAL NOTES
8	M–1	ABBREVIATIONS, LEGENDS, & NOTES
9	P–1	ABBREVIATIONS, LEGENDS & NOTES
10	P–2	PLUMBING SCHEDULES
11–17	STD–C–1 – STD–C–7	WASTEWATER DETAILS
18–28	STD–C–8 – STD–C–18	PAVEMENT DETAILS
29	STD–C–19	STORM WATER POLLUTION PREVENTION DETAILS
30–39	STD–C–20 – STD–C–29	TRAFFIC CONTROL DETAILS
40	STD–C–30	FENCE DETAILS
41	STD–C–31	TREE PROTECTION DETAILS
42–44	STD–C–32 – STD–C–34	FORCE MAIN DETAILS
45	STD–M–1	STANDARD MECHANICAL DETAILS
46–47	STD–P–1 – STD–P–2	STANDARD PLUMBING DETAILS
48–49	S–1 – S–2	STRUCTURAL GENERAL NOTES
50–51	STD–S–1 – STD–S–2	STRUCTURAL STANDARD DETAILS
52–56	STD–D–1 – STD–D–5	PROCESS DETAILS
57–66	STD–E–1 – STD–E–10	ELECTRICAL DETAILS
SHADY MAPLE LS		
67	SM–SC–1	SURVEY DATA – SHADY MAPLE
68	SM–FC–1	FIRMETTE – SHADY MAPLE LS
69	SM–C–1	EXISTING & DEMOLITION PLAN – SHADY MAPLE LS
70	SM–C–2	PROPOSED SITE PLAN – SHADY MAPLE LS
71	SM–C–3	PROPOSED GRADING – SHADY MAPLE LS
72	SM–C–4	PLAN AND PROFILE –SHADY MAPLE LS
73	SM–C–5	SWPPP – SHADY MAPLE LS
74	SM–C–6	TRAFFIC CONTROL PLAN – SHADY MAPLE LS
75	SM–C–7	TREE PROTECTION PLAN – SHADY MAPLE LS
76	SM–M–1	SHADY MAPLES LS – MECHANICAL PLANS AND SECTION
77	SM–P–1	SHADY MAPLES LS – PLUMBING PLAN
78–79	SM–S–1 – SM–S–2	STRUCTURAL SHEETS
80–82	SM–D–1 – SM–D–3	PROCESS SHEETS
83–106	SM–E–1 – SM–E–24	ELECTRICAL SHEETS
BROOKDALE LS		
107	BR–SC–1	SURVEY DATA – BROOKDALE
108	BR–FC–1	FIRMETTE –BROOKDALE LS
109	BR–C–1	EXISTING & DEMOLITION PLAN – BROOKDALE LS
110	BR–C–2	PROPOSED SITE PLAN – BROOKDALE LS
111	BR–C–3	PROPOSED GRADING – BROOKDALE LS
112	BR–C–4	PLAN & PROFILE – BROOKDALE LS
113	BR–C–5	SWPPP – BROOKDALE LS
114	BR–C–6	TRAFFIC CONTROL PLAN – BROOKDALE LS
115	BR–C–7	TREE PROTECTION PLAN – BROOKDALE LS
116–117	BR–M–1 – BR–M–2	MECHANICAL SHEETS
118–119	BR–P–1 – BR–P–2	PLUMBING SHEETS
120–121	BR–S–1 – BR–S–2	STRUCTURAL SHEETS
122–124	BR–D–1 – BR–D–3	PROCESS SHEETS
125–147	BR–E–1 – BR–I–13	ELECTRICAL SHEETS
MCMUD 58 LS		
148	MC58–SC–1	SURVEY DATA – M.C.M.U.D. #58
149	MC58–FC–1	FIRMETTE – MCMUD58 LS – 28
150	MC58–C–1	EXISTING & DEMOLITION PLAN – MCMUD58 LS
151	MC58–C–2	PROPOSED SITE PLAN – MCMUD58 LS
152	MC58–C–3	PROPOSED GRADING – MCMUD58 LS
153	MC58–C–4	PLAN & PROFILE – SANITARY – MCMUD58
154	MC58–C–5	PLAN & PROFILE – FORCE MAIN – MCMUD58
155	MC58–C–6	PLAN & PROFILE – STORM – MCMUD58
156	MC58–C–7	SWPPP – MCMUD58 LS
157	MC58–C–8	TRAFFIC CONTROL PLAN – MCMUD58 LS
158	MC58–C–9	TREE PROTECTION PLAN – MCMUD58 LS
159	MC58–M–1	M.C.M.U.D. #58 LS MECHANICAL PLAN AND SECTION
160	MC58–P–1	M.C.M.U.D. #58 LS PLUMBING PLANS
161–162	MC58–S–1 – MC58–S–2	STRUCTURAL SHEETS
163–166	MC58–D–1 – MC58–D–4	PROCESS SHEETS
167–189	MC58–E–1 – MC58–E–23	ELECTRICAL SHEETS
WILL CLAYTON LS		
190	WC–SC–1	SURVEY DATA – WILL CLAYTON
191	WC–FC–1	FIRMETTE – WILL CLAYTON LS
192	WC–C–1	EXISTING & DEMOLITION PLAN – WILL CLAYTON LS
193	WC–C–2	PROPOSED SITE PLAN – WILL CLAYTON LS
194	WC–C–3	PROPOSED GRADING – WILL CLAYTON LS
195	WC–C–4	PLAN VIEW – WILL CLAYTON LS
196	WC–C–5	PROFILE VIEW – WILL CLAYTON LS
197	WC–C–6	SWPPP – WILL CLAYTON LS
198	WC–C–7	TRAFFIC CONTROL PLAN – WILL CLAYTON LS
199	WC–C–8	TREE PROTECTION PLAN – WILL CLAYTON LS
200	WC–M–1	WILL CLAYTON LS MECHANICAL PLAN AND SECTION
201	WC–P–1	WILL CLAYTON LS PLUMBING PLANS
202	WC–S–1	WILL CLAYTON LS STRUCTURAL PLAN AND SECTION
203–206	WC–D–1 – WC–D–4	PROCESS SHEETS
207–229	WC–E–1 – WC–E–23	ELECTRIC SHEETS

SHEET NO.	DRAWING NO.	SHEET TITLE
HEATHER RIDGE LS		
230	HR–SC–1	SURVEY DATA – HEATHER RIDGE
231	HR–FC–1	FIRMETTE – HEATHER RIDGE LS – 28
232	HR–C–1	EXISTING & DEMOLITION PLAN – HEATHER RIDGE LS
233	HR–C–2	PROPOSED SITE PLAN – HEATHER RIDGE LS
234	HR–C–3	PROPOSED GRADING – HEATHER RIDGE LS
235	HR–C–4	PLAN & PROFILE – HEATHER RIDGE LS
236	HR–C–5	SWPPP – HEATHER RIDGE LS
237	HR–C–6	TRAFFIC CONTROL PLAN – HEATHER RIDGE
238	HR–C–7	TREE PROTECTION PLAN – HEATHER RIDGE
239	HR–M–1	HEATHER RIDGE LS MECHANICAL PLANS AND SECTION
240	HR–P–1	HEATHER RIDGE LS PLUMBING PLAN
241–242	HR–S–1 – HR–S–2	STRUCTURAL SHEETS
243–245	HR–D–1 – HR–D–3	PROCESS SHEETS
246–268	HR–E–1 – HR–E–23	ELECTRICAL SHEETS

RPS
A TETRA TECH COMPANY
Texas PE Firm Reg. #F-929
575 N. Dairy Ashford, Suite 700,
Houston, Texas 77079
T +1 281 589 7257
E usinfrastructure@rpsgroup.com

SURVEYED BY: KUO Inc.
FB NO. F–4578

This document is released for the purposes of interim review only under the authority of:

Jeremy Austin, P.E.
Texas P.E. No. 116816
03/30/2026

It is not to be used for bidding, construction, or permitting purposes.

CITY OF HOUSTON

HOUSTON PUBLIC WORKS

RECONSTRUCTION & REHABILITATION
COH LIFT STATIONS

SHEET INDEX
G–2

WBS NUMBER	FOR CITY OF HOUSTON USE ONLY
R–000267–0178–3	
DRAWING SCALE	
AS NOTED	
CITY OF HOUSTON PM	
TAHA LOTIA	
SHEET NO. 2 OF 268	

PLOT STYLE: 007_oce_coh_0620_src14.ctb PLOTTED: 3/30/2026 5:12 PM
FILE NAME: SHEET INDEX.dwg

1. PAVING

(FOR EXISTING OR PROPOSED HC PUBLIC R.O.W.)

CONCRETE

DESIGN THICKNESS OF PAVING (IN.)	STABILIZED SUBGRADE DEPTH (IN.)	DESIGN STRENGTH OF CONCRETE (PSI)	STEEL SPACING LONG. (IN.)	STEEL SPACING TRANS. (IN.)	REINFORCE STEEL SIZE (#4 MIN.)

ASPHALT

DESIGN SURFACE COURSE THICKNESS (IN.)	DESIGN SURFACE COURSE TYPE (MATERIAL)	DESIGN BASE COURSE THICKNESS (IN.)	DESIGN BASE COURSE TYPE (MATERIAL)	STABILIZED SUBGRADE DEPTH (IN.)	STABILIZED SUBGRADE TYPE (MATERIAL)

DRIVEWAYS (IN EXISTING OR PROPOSED HC PUBLIC R.O.W.)

I. NUMBER OF DRIVEWAY APPROACHES PROPOSED INCLUDING WIDENING OR REPAVING EXISTING DRIVEWAYS

DRWY	WIDTH	MATERIAL	CULVERT (Y/N)	CULVERT LENGTH	NEAREST CROSS-STREET	DISTANCE TO CROSS-STREET
1						
2						
3						
4						
5						

II. HARRIS COUNTY STANDARD DRIVEWAY DETAIL APPEARS ON SHEET(S): _____

III. ADDITIONAL DRIVEWAY TABLE (AS APPLICABLE) APPEARS ON SHEET(S): _____

FIRE APPARATUS ACCESS ROAD

☐ REQUIRED AND SHOWN ON SHEET(S): _____
☐ NOT REQUIRED DUE TO: _____

CURBING

☐ STANDARD 6" CURBING PROPOSED
☐ 4" x 12" CURBING PROPOSED EXCEPT AT MEDIANS AND ISLANDS

2. TRAFFIC

I. MEDIAN CUTS
☐ MEDIAN MODIFICATIONS ARE SHOWN ON SHEET(S): _____
☐ NO MEDIAN CUT OR RELOCATION IS PROPOSED

II. LEFT / RIGHT TURN LANE
☐ LEFT / RIGHT TURN LANE IS SHOWN ON SHEET(S): _____
☐ NO LEFT / RIGHT TURN LANE IS PROPOSED

III. TRAFFIC CONTROL PLAN
☐ TRAFFIC CONTROL SHOWN ON SHEET(S): _____
☐ NO WORK IN HC RIGHT OF WAY

IV. TRAFFIC SIGNAL
☐ EXISTING TRAFFIC SIGNAL DEVICES (BOXES AND LOOPS) SHOWN ON SHEET(S): _____
☐ NEW ☐ REBUILT ☐ MODIFIED TRAFFIC SIGNAL SHOWN ON SHEET(S): _____
☐ HC FIBER PRESENT
☐ NO TRAFFIC SIGNAL

V. TRAFFIC IMPACT ANALYSIS
☐ TRAFFIC IMPACT ANALYSIS APPROVED ON DATE: _____ PROJECT NO.:
☐ NO TRAFFIC IMPACT ANALYSIS REQUIRED AND HC APPROVED
☐ NO NEW TRIPS GENERATED

VI. TRAFFIC VARIANCE
☐ TRAFFIC VARIANCE APPROVED ON DATE: _____ PROJECT NO.: _____

3. DESCRIPTION OF PROPERTY

I. LEGAL DESCRIPTION
A. ACREAGE: _____
B. ☐ SUBDIVISION: _____
☐ SURVEY & ABSTRACT: _____
C. ADJACENT ROADS: _____

II. PLATTING
A. SUBDIVISION PLAT (CHECK APPLICABLE)
☐ PROPOSED PLAT / REPLAT
☐ RECORDED PLAT / REPLAT
PLAT NAME: _____

B. STREETS PROPOSED
☐ PUBLIC
☐ PRIVATE
☐ PUBLIC & PRIVATE
☐ NONE

NOTE: FINAL CPC101 REQUIRED FOR PLAN APPROVAL, RECORDED PLAT REQUIRED FOR FINAL INSPECTION.

III. JURISDICTIONS
☐ CITY OF _____
☐ ETJ, CITY OF HOUSTON
☐ ETJ, CITY OF _____
☐ NO ETJ

IV. HCAD ACCOUNT NOS. (ALL)
_____
_____

V. UNOBSTRUCTED VISIBILITY EASEMENT (U.V.E.)
☐ REQUIRED PER PLANNING COMMISSION / HC REGULATIONS SHOWN ON SHEET(S): _____
☐ NOT REQUIRED PER PLANNING COMMISSION / HC REGULATIONS

4. RESIDENTIAL / SUBDIVISION / STREET DEDICATION DRAINAGE

I. PROPOSED DRAINAGE SYSTEM TYPE
☐ STORM SEWER
☐ ROADSIDE DITCH
☐ LOW IMPACT DEVELOPMENT (LID)

II. DESIGN METHOD USED
☐ CITY OF HOUSTON _____ YEAR FREQUENCY
☐ OTHER: _____

III. DRAINAGE SYSTEM OUTFALLS DIRECTLY TO EXISTING
☐ DETENTION BASIN (APPROVED HC PROJECT NO.): _____
DETENTION BASIN MAINTAINED BY: _____
☐ HCFCD DRAINAGE DITCH UNIT NO.: _____
☐ HC ROADSIDE DITCH (ROAD NAME): _____
☐ HC STORM SEWER (APPROVED HC PROJECT NO.): _____

IV. HC OUTFALL CALCULATIONS
☐ ROADSIDE DITCH OUTFALL:
ALLOWABLE OUTFALL RATE: 0.0027 x _____ LF FRONTAGE = _____ (CFS)
PROPOSED OUTFALL RATE: _____ (CFS), CALCULATIONS PROVIDED ON SHEET(S): _____
☐ STORM SEWER OUTFALL
CAPACITY ALLOCATED TO TRACT FROM D. A. MAP: _____ (CFS)
FROM DRAINAGE AREA MAP DATED: _____
PREPARED BY: _____
APPROVED HC PROJECT NO.: _____
ACTUAL OUTFALL RATE: _____ (CFS), CALCULATIONS PROVIDED ON SHEET(S): _____

V. DETENTION PROVIDED BY
☐ DETENTION BASIN IS PART THIS PLAN SET. SERVICE AREA MAP IS ON SHEET(S): _____
☐ REGIONAL DETENTION BASIN SYSTEM (APPROVED HC PROJECT NO.): _____

PROPOSED STORM SEWER IS SUBMERGED (AGREEMENT MUST BE PROVIDED).
STATIC W.S.E. @ OUTFALL IS _____.

5. COMMERCIAL / OTHER SITE DRAINAGE

I. PROPOSED DRAINAGE AREA
☐ NEW DEVELOPMENT AREA: _____
☐ RE-DEVELOPMENT AREA (NET NEW DEVELOPED AREA): _____
☐ LOW IMPACT DEVELOPMENT (LID)

II. DETENTION VOLUME

NEW AREA _____ X * = _____ ACRE FEET
DETENTION REQUIRED

*☐ .65 (CHANNEL)
*☐ .75 (STM SWR)
*☐ 1.00 (RD. DITCH)
*☐ OTHER:

PROPOSED DETENTION VOLUME = _____ ACRE FEET
PROPOSED DETENTION VOLUME CALCULATIONS ARE SHOWN ON SHEET(S): _____
DETENTION VOLUME PROVIDED BY EXISTING DETENTION BASIN
APPROVED HC PROJECT NO.: _____
DETENTION BASIN SERVICE AREA MAP IS PROVIDED ON SHEET(S): _____

III. OUTFALL
OUTFALL TO ☐ HC ROADSIDE DITCH
☐ EXISTING HC STORM SEWER
☐ OTHER _____

☐ HC ROADSIDE DITCH OUTFALL:
PROPOSED OUTFALL RATE: _____ (CFS), CALCULATIONS PROVIDED ON SHEET(S): _____
ALLOWABLE OUTFALL RATE: 0.0027 x _____ LF FRONTAGE = _____ (CFS)
☐ HC STORM SEWER OUTFALL:
CAPACITY ALLOCATED TO TRACT FROM D. A. MAP: _____ (CFS)
FROM DRAINAGE AREA MAP DATED: _____
PREPARED BY: _____
APPROVED HC PROJECT NO.: _____
ACTUAL OUTFALL RATE: _____ (CFS), CALCULATIONS PROVIDED ON SHEET(S): _____

IV. PUMPED DETENTION FACILITIES
VOLUME THAT GRAVITY FLOWS: _____ ACRE FEET
VOLUME THAT IS PUMPED: _____ ACRE FEET
ENTRANCE VELOCITY INTO ROADSIDE DITCH
OR STORM SEWER: _____
PUMP SPECIFICATIONS AND AUTOMATIC SHUTOFF PLAN FOR ROADSIDE DITCH & STORM SEWER OUTFALLS APPEAR ON SHEET(S): _____

V. FLOW RESTRICTOR SIZE
OUTFALL PIPE SIZE: _____
RESTRICTOR PIPE SIZE: _____
ON SHEET(S): _____

6. OFFSITE SHEET FLOW (100 YEAR)

OFFSITE SHEET FLOW MAPPING, TOTAL DISCHARGE CALCULATIONS, AND DESIGN ACCOMMODATIONS ARE SHOWN ON SHEET(S): _____

TOTAL ACREAGE = _____ (AC.)
TOTAL DISCHARGE = _____ (CFS)

☐ ALL OFFSITE SHEET FLOW FROM ADJACENT PROPERTIES IDENTIFIED AND PROPERLY ACCOUNTED FOR IN THE PROJECT.
☐ SIGNING ENGINEER HEREBY CERTIFIES THAT THESE AREAS HAVE BEEN ADDRESSED.

7. STORMWATER QUALITY

I. SWPPP: CONSTRUCTION MEASURES (COMPLETE FOR ALL PROJECTS)
NUMBER OF ACRES DISTURBED: _____
☐ DISTURBS >1AC. SITE PLAN & DETAILS ON SHEET(S): _____
☐ DISTURBS <1AC. N/A

II. APPLICABILITY FOR PERMANENT FEATURES (COMPLETE FOR ALL PROJECTS)
EXEMPT NEW DEVELOPMENT:
☐ PROJECT IS ON A PARCEL, WITHIN A LARGER COMMON PLAN OF DEVELOPMENT OR SALE, LESS THAN 5 ACRES.
THIS EXEMPTION IS VERIFIED WITH THE PLAT AND/OR GENERAL PLAN ON THE PROPERTY.

EXEMPT REDEVELOPMENT:
☐ THE INCREASE IN THE TOTAL AMOUNT OF IMPERVIOUS SURFACE, CURRENT PROJECT AND ANY SINCE 10/01/2001, ON A PREVIOUSLY DEVELOPED 5 ACRE OR LARGER PARCEL, INDIVIDUALLY AND/OR CONTIGUOUSLY OWNED, IS LESS THAN 1 ACRE.

NEW IMPERVIOUS:

CURRENT PROJECT	PREVIOUS PROJECT(S) TOTAL	TOTAL (CURRENT+PREVIOUS)

EXEMPT GRANDFATHERED:
☐ DRAINAGE FROM THIS PROJECT OUTFALLS DIRECTLY INTO AN EXISTING AND APPROVED DRAINAGE SYSTEM PRIOR TO 10/01/2001 WITH NO NEW DETENTION REQUIREMENT. INCLUDE THE ORIGINAL DRAINAGE AREA MAP OF THAT SYSTEM FOR VERIFICATION.
D.A. MAP NAME: _____ DATE: _____ APPROVED HC PROJECT NO.: _____

III. GENERAL
☐ PROJECT'S SWQ REQUIREMENTS FALL WITHIN THE JURISDICTION OF: _____ (ONLY COMPLETE IF OUTSIDE OF UNINCORPORATED HARRIS COUNTY)
☐ STORMWATER QUALITY PERMIT REQUIREMENT IS COVERED BY:
☐ EXISTING SWQMP
PROJECT TITLE: _____
HC PROJECT NO.: _____ HC SWQ PERMIT NO.: _____
SWQ SERVICE AREA MAP INCLUDED ON SHEET(S): _____
☐ INDUSTRIAL PERMITTING. (IAC AND SUPPORTING DOCUMENTATION MUST BE SUBMITTED)
PERMIT NO: _____

IF THE PROJECT IS NOT EXEMPT, OUTSIDE OF HARRIS COUNTY'S JURISDICTION, OR COVERED BY AN EXISTING SWQMP, A STORMWATER QUALITY MANAGEMENT PLAN IS REQUIRED.

IV. PERMANENT SWQ FEATURES (COMPLETE IF NOT EXEMPT)
☐ SITE PLAN ON SHEET(S): _____
☐ VEGETATIVE CONTROLS USED: (FILTER STRIP, GRASSY SWALE, URBAN FORESTRY, LID)
DETAILS AND CALCULATIONS APPEAR ON SHEET(S): _____
☐ BASIN STRUCTURE USED (WET, DRY, WETLANDS)
STRUCTURAL CONTROL IN BASIN: _____
DETAILS/CALCULATIONS ON SHEET(S): _____
☐ HYDRODYNAMIC TYPE SEPARATOR MODEL: _____
DETAILS/CALCULATIONS ON SHEET(S): _____
☐ OTHER(S):
STRUCTURAL CONTROL(S): _____
DETAILS/CALCULATIONS ON SHEET(S): _____

8. FLOODPLAIN STATUS

I. GENERAL INFORMATION
FIRM PANEL(S) FOR PROPERTY: _____
FIRM PANEL(S) DATE: _____
STATUS OF PROPERTY ON MAP
☐ ENTIRELY LOCATED IN UNSHADED ZONE X
☐ LOCATED PARTIALLY OR ENTIRELY IN ANY A ZONE OR SHADED ZONE X, DELINEATE FLOODPLAIN BOUNDARY ON CONSTRUCTION DRAWINGS (DRAINAGE LAYOUT PG. NO._____) (1% BASE FLOOD LEVEL _____)
(0.2% BASE FLOOD LEVEL _____)
☐ SITE REMOVED FROM FLOODPLAIN BY LOMR, LOMR-F, LOMA CASE NO._____ REVISED FLOODPLAIN IS SHOWN ON SHEET(S): _____

II. ELEVATION INFORMATION
BENCHMARK USED
☐ HARRIS COUNTY FLOODPLAIN REFERENCE MARK
☐ HARRIS-GALVESTON COASTAL SUBSIDENCE DISTRICT BENCHMARK (FOR COASTAL AREAS)
DESCRIPTION OF BENCHMARK INCLUDING ELEVATION, DATUM AND YEAR OF ADJUSTMENT (2001 ADJ.) _____

III. FLOODPLAIN DETERMINATION BASED ON GROUND ELEVATION
☐ PROPERTY LIES ENTIRELY ABOVE THE 1% BASE FLOOD LEVEL AND IN SHADED ZONE X
☐ PROPERTY LIES PARTIALLY OR ENTIRELY BELOW THE 1% BASE FLOOD LEVEL

IV. FLOODPLAIN STORAGE SUMMARY (APPLIES ONLY TO PORTION OF LAND LOCATED WITHIN FLOODPLAIN AS DELINEATED BY FIRM PANEL)
A. TOTAL VOLUME OF MATERIAL PROPOSED TO BE MOVED OR PLACED WITHIN THE FIRM DELINEATED FLOODPLAIN (FILL, BASE, CONCRETE, ASPHALT, ETC.): BELOW 0.2% BASE FLOOD ELEVATION _____ (2001 ADJ.) _____ CUBIC YARDS
B. TOTAL VOLUME OF MATERIAL PROPOSED TO BE REMOVED FROM THE FIRM DELINEATED FLOODPLAIN: BELOW 0.2% BASE FLOOD ELEVATION _____ (2001 ADJ.) _____ CUBIC YARDS
C. FILL AREA & VOLUME CALCULATIONS ARE SHOWN ON SHEET(S): _____

9. WATER AND WASTEWATER

I. COMMERCIAL PROJECTS
DOES THE PROPERTY HAVE UTILITIES?
☐ PROPOSED ☐ EXISTING ☐ NO
CHECK APPLICABLE
☐ PUBLIC WATER & SANITARY
☐ PRIVATE WATER WELL & SEPTIC SYSTEM
☐ PUBLIC WATER & PRIVATE SEPTIC SYSTEM
☐ PRIVATE WATER WELL & PUBLIC SANITARY
☐ LETTER FROM THE DISTRICT / MUNICIPALITY AUTHORIZING MUNICIPALITY AUTHORIZING SERVICE & CONNECTION.
UTILITY DISTRICT / MUNICIPALITY NAME: _____
☐ PROPOSED OR EXISTING SEPTIC TANK(S) AND DISPOSAL AREA(S) SHOWN ON SHEET(S): _____
☐ ALL EXISTING AND PROPOSED UTILITIES ACCURATELY SHOWN & LABELED ON THE SITE PLANS.

NOTE: SEPTIC SYSTEMS REQUIRE HC WASTEWATER REVIEW
HC SEPTIC PERMIT/REQUEST NO. _____

NOTE: DEDICATED UNDERGROUND FIRE LINES MUST BE SUBMITTED TO THE HARRIS COUNTY FIRE PROTECTION GROUP FOR REVIEW AND PERMITTING BY THE UNDERGROUND FIRE LINE CONTRACTOR. CIVIL REVIEW DOES ***NOT*** REVIEW OR APPROVE UNDERGROUND FIRE LINES FOR THE FIRE PROTECTION SYSTEMS.

WASTEWATER TREATMENT PLANTS

HC WWTP REVIEW:
☐ NEW WWTP SITE OR REHAB / EXPANSION OF AN EXISTING WWTP SITE
☐ HARRIS COUNTY DOMESTIC WASTEWATER TREATMENT PLANT EXPRESS REVIEW SHEET ATTACHED AND COMPLETED ACCORDING TO INSTRUCTIONS

10. SIDEWALKS

☐ SIDEWALKS ARE PROPOSED IN THIS DEVELOPMENT
☐ NO SIDEWALKS ARE PROPOSED IN THIS DEVELOPMENT

11. LANDSCAPING

☐ COMMERCIAL BUILDING(S) PROPOSED AND LANDSCAPING SHOWN ON SHEET(S): _____
☐ NO COMMERCIAL BUILDING(S) PROPOSED

12. PERMITS REQUIRED

☐ STORM WATER QUALITY
☐ ORIGINAL ☐ AMENDMENT TO PERMIT NO.: _____
☐ SEPTIC (EXISTING) ☐ SEPTIC (PROPOSED)
☐ CIVIL SITE WORK (PHASE II PERMIT CLASS I (UNSHADED X ZONE))
☐ CIVIL SITE WORK (PHASE II PERMIT CLASS II (ALL OTHER ZONES))
☐ DRIVEWAY WITH CULVERT ☐ DRIVEWAY WITH CURB AND GUTTER
☐ BUILDING(S) IS A CRITICAL FACILITY
☐ BUILDING PERMITS (NO. OF BUILDINGS = _____)
☐ SUBDIVISION INFRASTRUCTURE PHASE II (NO. OF LOTS = _____)
☐ NOTICE OF DETENTION AFFIDAVIT REQUIRED
☐ MUD MAINTENANCE AGREEMENT REQUIRED
☐ STREET DEDICATION

WORK IN HARRIS COUNTY R.O.W.
☐ UTILITY WORK _____
☐ TURN LANE _____
☐ OTHER CONSTRUCTION _____

VIOLATIONS
☐ EXISTING VIOLATIONS ON PROPERTY
VIOLATION NUMBER(S): _____

NOTES:
A PERMIT IS REQUIRED FOR EACH SCOPE OF WORK ON SITE.
A R.O.W. NOTIFICATION IS REQUIRED FOR EACH SCOPE OF WORK IN HC OR HCFCD R.O.W.

BENCHMARK REQUIREMENTS FOR PROPOSED BRIDGES AND OR NEW RESIDENTIAL SUBIDIVSIONS

When the County Engineer has determined that a new benchmark will be required to be established for the proposed project, the developer shall be required to install a benchmark per section 8.0, part 2 of the Harris County Infrastructure Regulations.

Is a new Benchmark required for this project? (*to be determined by Harris County*) [__] yes [__] no

If a new Benchmark is required, the proposed benchmark information is shown on sheet(s): ____

FOR PROJECTS LOCATED IN ANY FLOODPLAIN

Development constructed or placed in accordance with these plans will comply with all provisions of the Regulations of Harris County, Texas for Floodplain Management.

No net fill is allowed in the flood plain and no fill is allowed in the floodway.

FOUNDATION NOTES: (*Applies to only buildings or building additions requiring a class II permit*)

All water heaters, furnaces, air conditioning units, electrical distribution panels, and any other mechanical or electrical equipment must be elevated in accordance with Section 4.05 of Harris County Floodplain regulations.

Any electrical circuit serving a light switch or outlet located below the base (100-year) flood elevation shall be dropped from above and be on a separate breaker.

All materials used below the (100-year) base flood elevation are on approved FEMA Technical Bulletin 2-08 as Class 5 water-resistant, and approved in accordance with FEMA Technical Bulletin 1-08 for foundation openings.

Critical facilities located in the 0.2% or 500yr floodplain or 1% or 100yr floodplain shall have the lowest floor elevated to 3 feet or more above the 0.2% flood elevation, or 24 inches above the crown of the adjacent road, which ever results in a higher elevation.

Floodproofing and sealing measures must be taken to ensure that toxic substances will not be displaced by or released into floodwaters.

Access routes elevated to or above the level of the base flood shall be provided to all critical facilities to the extent possible.

A completed as-built certificate must be submitted after the structure is complete and before it is occupied.

The County Engineer's Office will post a final inspection notice on the structure once all requirements have been met.

No fill may be used to elevate structures in the 1% or 100yr flood plain. Structures may be constructed on an open foundation, such as piers, or on continuous foundation walls with properly sized and located openings. All foundations are required to be designed by a registered professional engineer.

All structures shall be designed to withstand a three second gust basic wind speed of 120mph.

*Completed ***Elevation Certificates** to be submitted: one at permitting, a second after the slab is poured or sub-floor is installed and before the framing starts, and a third is required once construction is finished. *(PER CURRENT FIRM PANEL)*

HARRIS COUNTY OFFICE OF THE COUNTY ENGINEER - PERMIT OFFICE NOTE:

THE PERMIT MANAGER SIGNATURE REPRESENTS THE FOLLOWING:
- THE COMPLETION OF REVIEW OF THESE PLANS
- INTERPOSE NO OBJECTION TO THE PROPOSED DESIGN ON PRIVATE PROPERTY
- APPROVAL OF WORK IN HARRIS COUNTY MAINTAINED RIGHT OF WAY
- APPROVAL OF WORK IN PROPOSED HARRIS COUNTY RIGHT OF WAY THAT IS TO BE ACCEPTED BY THE COUNTY

HCOCE SIGNATURE BLOCK:

THE PROJECT WAS REVIEWED, HOWEVER, THIS DOES NOT MEAN THE ENTIRE PROJECT, INCLUDING ALL SUPPORTING DATA AND CALCULATIONS HAVE BEEN COMPLETELY CHECKED AND VERIFIED. THESE DRAWINGS ARE SIGNED, DATED AND SEALED BY A PROFESSIONAL ENGINEER LICENSED TO PRACTICE IN THE STATE OF TEXAS, WHICH THEREFORE CONVEYS THE ENGINEER'S RESPONSIBILITY AND ACCOUNTABILITY. THIS DOES NOT RELIEVE ANY PARTY FROM COMPLYING WITH APPROPRIATE FEDERAL, STATE AND LOCAL ENVIRONMENTAL RULES, LAWS, AND REGULATIONS AND ANY OTHER LEGALLY ADOPTED REGULATION OR ORDINANCE RELATED TO LAND DEVELOPMENT. IF THE CITY SIGNATURES ARE REQUIRED BY ORDINANCE, COUNTY PERMITS WILL NOT BE ISSUED UNTIL SUCH SIGNATURES ARE OBTAINED. PLAN APPROVAL EXPIRATION TO BE IN ACCORDANCE WITH LOCAL GOVERNEMENT CODE CH. 245.

ENGINEER'S CERTIFICATION

I, _____, A LICENSED PROFESSIONAL ENGINEER IN THE STATE OF TEXAS, DO HEREBY CERTIFY THAT THE INFORMATION PRESENTED ON THIS SHEET IS TRUE AND CORRECT TO THE BEST OF MY KNOWLEDGE AND THAT I AM NOT VIOLATING ANY PROVISION OF THE CURRENT TEXAS ENGINEERING PRACTICE ACT AND RULES CONCERNING THE PRACTICE OF ENGINEERING AND PROFESSIONAL ENGINEERING LICENSURE. I CERTIFY TO THE BEST OF MY KNOWLEDGE THAT THE PLANS IN THEIR ENTIRETY ARE DESIGNED PER THE HARRIS COUNTY ENGINEERING STANDARDS, REGULATIONS, AND GUIDELINES UNLESS PROVIDED A VARIANCE BY THE COUNTY ENGINEER OR HIS DESIGNEE. SHOULD IT BE DEEMED BY HCED STAFF, THAT THE PLANS DO NOT MEET THE COUNTY'S STANDARDS, REGULATIONS AND GUIDELINES AND DID NOT RECEIVE AN APPROVED VARIANCE, THE APPROVAL OF SAID PLANS BECOMES NULL AND VOID AND THE DESIGN PLANS MUST BE CORRECTED AT NO CHARGE TO THE COUNTY.

THE COMPLETED PROJECT CONSISTS OF DRAWING SHEETS _____ THRU _____

SIGNATURE _____ DATE _____

SEAL

This document is released for the purposes of interim review only under the authority of:

Jeremy Austin, P.E.
Texas P.E. No. 116816
03/30/2026

It is not to be used for bidding, construction, or permitting purposes.

REVISIONS

NOTE: REVISION BLOCK IS TO BE USED ONLY FOR CHANGES MADE AFTER PLANS HAVE BEEN APPROVED BY HARRIS COUNTY.

REV. NO.	DATE	SHEET NO.	DESCRIPTION	P.E. INITIAL	HC APPROVED DATE	HC INITIAL

HARRIS COUNTY
OFFICE OF THE COUNTY ENGINEER
REVIEW SHEET

HC PROJECT NO. HCFCD PROJECT NO. SHEET NUMBER 3 OF 268

ABBREVIATIONS:

&	AND
@	AT
AB	ALL BELL
AC	ACRE / ASBESTOS CEMENT
AI/VR	AIR INLET / VACUUM RELIEF
APPROX	APPROXIMATELY
ASPH	ASPHALT
AVE	AVENUE
℄	BASELINE
B/B	BACK TO BACK
BC	BACK OF CURB
BFV	BUTTERFLY VALVE
BL	BUILDING LINE
BLDG	BUILDING
BLVD	BOULEVARD
℄	CENTER LINE
C/C	CENTER TO CENTER
CGMP	CORRUGATED GALVANIZED METAL PIPE
CMP	CORRUGATED METAL PIPE
CIP	CAST IRON PIPE
CLR	CLEARANCE
CO	CLEAN OUT
COH	CITY OF HOUSTON
CONC	CONCRETE
CONSTR	CONSTRUCTION
CPEE	CENTERPOINT ENERGY ELECTRIC
CPEG	CENTERPOINT ENERGY GAS
DIA	DIAMETER
DIP	DUCTILE IRON PIPE
DR	DRIVE
DWG	DRAWING
DWY	DRIVEWAY
E	EAST
EL	ELEVATION
EP	EDGE OF PAVEMENT
E/R	END OF RADIUS
ESMT	EASEMENT
EXIST	EXISTING
FC	FACE OF CURB
F/F	FACE TO FACE
FH	FIRE HYDRANT
℄	FLOW LINE
FM	FORCE MAIN
FT	FEET
GPS	GLOBAL POSITIONING SYSTEM
GV	GATE VALVE
GV&B	GATE VALVE AND BOX
HCFCD	HARRIS COUNTY FLOOD CONTROL DISTRICT
HDPE	HIGH-DENSITY POLYETHYLENE
HGL	HYDRAULIC GRADE LINE
HP	HIGH PRESSURE
INV EL	INVERT ELEVATION
IP	INTERMEDIATE PRESSURE
IR	IRON ROD

ABBREVIATIONS:

J-BOX	JUNCTION BOX
JT	JOINT
JUNCT	JUNCTION
LF	LINEAR FEET
LN	LANE
LPT	LOW POINT
LT	LEFT
LS	LIFT STATION
MAX	MAXIMUM
METRO	METROPOLITAN TRANSIT AUTHORITY
MH	MANHOLE
MIN	MINIMUM
MON	MONUMENT
N	NORTH
NA	NOT APPLICABLE
NAVD	NORTH AMERICAN VERTICAL DATUM
NG	NATURAL GROUND
NO	NUMBER
NTS	NOT TO SCALE
OCC	ZERO CURB CUT
OS	OFFSET
OH	OVERHEAD
PC	POINT OF CURVE
PCC	POINT OF COMPOUND CURVATURE
PCCP	PRESTRESSED CONCRETE CYLINDER PIPE
PERM	PERMANENT
PGL	PROFILE GRADE LINE
PI	POINT OF INTERSECTION
PL	PROPERTY LINE
PNT	POINT
PPCA	POTENTIALLY PETROLEUM CONTAMINATED AREA
PRC	POINT OF REVERSE
PROP	PROPOSED
PSI	POUND PER SQUARE INCH
PT	POINT OF TANGENCY
PVC	POLYVINYL CHLORIDE PIPE / POINT OF VERTICAL CURVATURE
PVMT	PAVEMENT
PVI	POINT OF VERTICAL INTERSECTION
PVT	POINT OF VERTICAL TANGENCY

ABBREVIATIONS:

(R)	RECORD DRAWING
R	RADIUS
RCB	REINFORCED CONCRETE BOX
RCP	REINFORCED CONCRETE PIPE
RD	ROAD
REINF	REINFORCED
REM	REMOVABLE
RJ	RESTRAINED JOINT
ROW	RIGHT OF WAY
RR	RAILROAD
RRPM	REFLECTIVE REMOVABLE PAVEMENT MARKERS
RT	RIGHT
S	SOUTH
SAN	SANITARY
SCHED	SCHEDULE
SF	SQUARE FEET
SHT	SHEET
SSE	SANITARY SEWER EASEMENT
ST	STREET
STA	STATION
STD	STANDARD
STL	STEEL
STM	STORM
SWBT	SOUTHWESTERN BELL TELEPHONE
SWR	SEWER
SY	SQUARE YARD
TAN	TANGENT
TBM	TEMPORARY BENCHMARK
TEMP	TEMPORARY
TOB	TOP OF BANK
TOC	TOP OF CURB
TOP	TOP OF PAVEMENT
TOS	TOP OF STACK
TS&V	TAPPING SLEEVE AND VALVE
TXDOT	TEXAS DEPARTMENT OF TRANSPORTATION
TYP	TYPICAL
UE	UTILITY EASEMENT
UGND	UNDERGROUND
VC	VERTICAL CURVE
VPI	VERTICAL POINT OF INTERSECTION
W	WEST
W/	WITH
WL	WATER LINE
WLE	WATER LINE EASEMENT
WM	WATER METER
WP	WOOD POLE
WSEL	WATER SURFACE ELEVATION
WV	WATER VALVE
WWTP	WASTE WATER TREATMENT PLANT

RPS A TETRA TECH COMPANY
Texas PE Firm Reg. #F-929
575 N. Dairy Ashford, Suite 700,
Houston, Texas 77079
T +1 281 589 7257
E usinfrastructure@rpsgroup.com

SURVEYED BY: KUO Inc.
FB NO. F-4578

This document is released for the purposes of interim review only under the authority of:

Jeremy Austin, P.E.
Texas P.E. No. 116816
03/30/2026

It is not to be used for bidding, construction, or permitting purposes.

CITY OF HOUSTON
HOUSTON PUBLIC WORKS

RECONSTRUCTION & REHABILITATION
COH LIFT STATIONS

ABBREVIATION
G-4

WBS NUMBER	FOR CITY OF HOUSTON USE ONLY
R-000267-0178-3	
DRAWING SCALE	
AS NOTED	
CITY OF HOUSTON PM	
TAHA LOTIA	
SHEET NO. 4 OF 268	

PLOTTED: 3/30/2026 4:30 PM
PLOT STYLE: Coh_ctb_230809.ctb
FILE NAME: 4 ABBREVIATION.dwg

PLOTTED: 3/30/2026 4:30 PM

PLOT STYLE: Coh_ctb_230809.ctb

FILE NAME: 5 SYMBOLS.dwg

EXISTING PLAN VIEW

- WATER METER
- WATER VALVE (GATE)
- WATER VALVE (BUTTERFLY)
- FIRE HYDRANT/FLUSHING VALVE
- TAPPING SLEEVE & VALVE
- REDUCER
- ROUND CONNECTION
- SANITARY SEWER CLEANOUT & MANHOLE
- STORM SEWER MANHOLE
- STORM SEWER INLETS
- CULVERT PIPE AND HEADWALL
- TOP OF CURB ELEVATION
- GUTTER ELEVATION
- TOP OF PAVEMENT ELEVATION
- CONTOUR LINE
- ROW LINE
- PROPERTY LINE
- LOT LINES
- EASEMENT LINE
- CENTER LINE OF ROW
- TRANSIT LINE
- EDGE OF DITCHES
- CENTER LINE OF DITCHES
- EDGE OF DITCHES
- FENCE LINE, WOOD
- FENCE LINE, CHAIN LINK
- FENCE LINE, BARBED WIRE
- FENCE LINE, HOG WIRE
- EDGE OF CONCRETE
- CURB LINE
- CONCRETE WALK
- EDGE OF ASPHALT
- EDGE OF SHELL OR GRAVEL
- DIMENSION LINE
- AERIAL POWER LINE
- UNDERGROUND POWER LINE
- GAS LINE
- UNKNOWN UNDERGROUND LINE
- OIL PIPELINE
- UNDERGROUND TELECOMM LINE W/VAULT
- AERIAL TELECOMM LINE
- RAILROAD LINE
- WATER LINE
- SANITARY SEWER LINE
- STORM SEWER LINE
- SANITARY SEWER FORCE MAIN
- RECLAIMED WATER LINE
- NON–POTABLE WATER LINE
- GAS METER
- GAS VALVE
- PROPANE LINE
- STEAM LINE
- MISC UNDERGROUND PIPELINE LABLE

PROPOSED PLAN VIEW

- WATER METER
- WATER VALVE (GATE)
- WATER VALVE (BUTTERFLY)
- FIRE HYDRANT/FLUSHING VALVE
- TAPPING SLEEVE & VALVE
- REDUCER
- ROUND CONNECTION
- SANITARY SEWER CLEANOUT & MANHOLE
- STORM SEWER MANHOLE
- STORM SEWER INLETS
- CULVERT PIPE AND HEADWALL
- TOP OF CURB ELEVATION
- GUTTER ELEVATION
- TOP OF PAVEMENT ELEVATION
- CONTOUR LINE
- ROW LINE
- PROPERTY LINE
- LOT LINES
- EASEMENT LINE
- CENTER LINE OF ROW
- TRANSIT LINE
- EDGE OF DITCHES
- CENTER LINE OF DITCHES
- EDGE OF DITCHES
- FENCE LINE, WOOD
- FENCE LINE, CHAIN LINK
- FENCE LINE, BARBED WIRE
- FENCE LINE, HOG WIRE
- EDGE OF CONCRETE
- CURB LINE
- CONCRETE WALK
- EDGE OF ASPHALT
- EDGE OF SHELL OR GRAVEL
- DIMENSION LINE
- AERIAL POWER LINE
- UNDERGROUND POWER LINE
- GAS LINE
- UNKNOWN UNDERGROUND LINE
- OIL PIPELINE
- UNDERGROUND TELECOMM LINE W/ VAULT
- AERIAL TELECOMM LINE
- RAILROAD LINE
- WATER LINE
- SANITARY SEWER LINE
- STORM SEWER LINE
- SANITARY SEWER FORCE MAIN
- RECLAIMED WATER LINE
- NON–POTABLE WATER LINE
- GAS METER
- GAS VALVE
- PROPANE LINE
- STEAM LINE
- MISC UNDERGROUND PIPELINE LABLE
- MATCH LINE

EXISTING PLAN VIEW

- PAVING HEADER
- BUILDING, RESIDENTIAL
- BUILDING, COMMERCIAL
- TREE
- HEDGE
- IRON PIPE OR IRON ROD MONUMENT
- POINT OF INTERSECTION (PI)
- POINT OF CURVE (PC)
- POINT OF TANGENCY (PT)
- POWER POLE
- POWER POLE W/DOWN GUY

EXISTING PROFILE VIEW

- NORTH OR EAST PROPERTY LINE
- SOUTH OR WEST PROPERTY LINE
- NORTH OR EAST CURB
- SOUTH OR WEST CURB
- NORTH OR EAST DITCH
- SOUTH OR WEST DITCH
- NORTH OR EAST NATURAL GROUND
- SOUTH OR WEST NATURAL GROUND
- NORTH OR EAST CULVERT
- SOUTH OR WEST CULVERT
- CENTERLINE OF ROW
- CENTERPOINT ENERGY CONDUIT
- GAS LINE
- WESTERN UNION
- AT&T CONDUIT
- WATER LINE
- SANITARY SEWER LINE
- STORM SEWER LINE
- SANITARY SEWER FORCE MAIN
- RECLAIMED WATER LINE
- NON–POTABLE WATER LINE
- CENTERPOINT ENERGY MANHOLE
- AT&T MANHOLE
- WATER LINE MANHOLE
- SANITARY SEWER MANHOLE & CLEANOUT
- STORM SEWER MANHOLE
- STORM SEWER INLET

PROPOSED PLAN VIEW

- PAVING HEADER
- BUILDING, RESIDENTIAL
- BUILDING, COMMERCIAL
- TREE
- HEDGE
- IRON PIPE OR IRON ROD MONUMENT
- POINT OF INTERSECTION (PI)
- POINT OF CURVE (PC)
- POINT OF TANGENCY (PT)
- POWER POLE
- POWER POLE W/DOWN GUY

PROPOSED PROFILE VIEW

- NORTH OR EAST PROPERTY LINE
- SOUTH OR WEST PROPERTY LINE
- NORTH OR EAST CURB
- SOUTH OR WEST CURB
- NORTH OR EAST DITCH
- SOUTH OR WEST DITCH
- NORTH OR EAST NATURAL GROUND
- SOUTH OR WEST NATURAL GROUND
- NORTH OR EAST CULVERT
- SOUTH OR WEST CULVERT
- CENTERLINE OF ROW
- CENTERPOINT ENERGY CONDUIT
- GAS LINE
- WESTERN UNION
- AT&T CONDUIT
- WATER LINE
- SANITARY SEWER LINE
- STORM SEWER LINE
- SANITARY SEWER FORCE MAIN
- RECLAIMED WATER LINE
- NON–POTABLE WATER LINE
- CENTERPOINT ENERGY MANHOLE
- AT&T MANHOLE
- WATER LINE MANHOLE
- SANITARY SEWER MANHOLE & CLEANOUT
- STORM SEWER MANHOLE
- STORM SEWER INLET

MISC STANDARD ELEMENTS

- COH NORTH ARROW
- COH BAR SCALE (0' 10' 20' 40'; SCALE: 1"=20')
- REVISION CLOUD/DELTA
- DETAIL/SECTION TITLE (1 VIEW TITLE; SCALE: 1:1)
- SECTION CALLOUT (1 / XX)
- DETAIL CALLOUT (1 / XX)

RPS — A TETRA TECH COMPANY
Texas PE Firm Reg. #F-929
575 N. Dairy Ashford, Suite 700, Houston, Texas 77079
T +1 281 589 7257
E usinfrastructure@rpsgroup.com

SURVEYED BY: KUO Inc.
FB NO. F–4578

This document is released for the purposes of interim review only under the authority of:

Jeremy Austin, P.E.
Texas P.E. No. 116816
03/30/2026

It is not to be used for bidding, construction, or permitting purposes.

CITY OF HOUSTON
HOUSTON PUBLIC WORKS

RECONSTRUCTION & REHABILITATION
COH LIFT STATIONS

SYMBOLS
G–5

WBS NUMBER	FOR CITY OF HOUSTON USE ONLY
R–000267–0178–3	
DRAWING SCALE	
AS NOTED	
CITY OF HOUSTON PM	
TAHA LOTIA	
SHEET NO. 5 OF 268	

GENERAL CONSTRUCTION NOTES

1. UNLESS OTHERWISE NOTED AND APPROVED ON DRAWINGS, CONSTRUCT CIVIL INFRASTRUCTURE IN ACCORDANCE WITH THE EFFECTIVE EDITION OF THE HOUSTON PUBLIC WORKS STANDARD CONSTRUCTION SPECIFICATIONS, STANDARD CONSTRUCTION DETAILS AND SUPPLEMENTS, ADDENDA, AND AMENDMENTS THERETO. THE LATEST EDITION OF THE ABOVE PUBLICATIONS CAN BE FOUND AT:
HTTPS: WWW.HOUSTONPERMITTINGCENTER.ORG/OFFICE-CITY-ENGINEER/DESIGN-AND-CONSTRUCTION-STANDARDS.
2. THE DESIGN MUST BE CONSISTENT WITH THE EFFECTIVE EDITION OF HOUSTON PUBLIC WORKS INFRASTRUCTURE DESIGN MANUAL AND TCEQ (TEXAS COMMISSION ON ENVIRONMENTAL QUALITY) REQUIREMENTS.
3. UTILITIES PRESENTED ON THESE DRAWINGS ARE SHOWN BASED ON THE BEST AVAILABLE INFORMATION. CONTRACTOR SHALL VERIFY THE EXACT LOCATIONS IN THE FIELD PRIOR TO COMMENCING CONSTRUCTION. CONTRACTOR SHALL NOTIFY TEXAS ONE CALL AT 713-223-4567/811 OR 800-344-8377 AND LONE STAR NOTIFICATION CENTER AT 800-669-8344 AT LEAST 48 HOURS BEFORE PROCEEDING WITH ANY EXCAVATION. UTILITIES MARKED WITHIN PUBLIC RIGHT OF WAY OR IN EASEMENTS SHALL COMPLY WITH TAC TITLE 16, PART 1, CHAPTER 18, RULE § 18.6 AND THE AMERICAN PUBLIC WORKS ADMINISTRATION (APWA) UNIFORM COLOR CODE.
4. CONTRACTOR SHALL BE RESPONSIBLE FOR DAMAGES TO EXISTING WATER, WASTEWATER STORM DRAINAGE LINES, AND TRAFFIC CONTROL DEVICES. DAMAGES SHALL BE REPAIRED IN ACCORDANCE WITH THE EFFECTIVE EDITION OF HOUSTON PUBLIC WORKS STANDARD CONSTRUCTION SPECIFICATIONS FOR WASTEWATER COLLECTION SYSTEMS, WATER LINES, STORM DRAINAGE, STREET PAVING, AND TRAFFIC AND STANDARD CONSTRUCTION DETAILS FOR WASTEWATER COLLECTION SYSTEMS, WATER LINES, STORM DRAINAGE, STREET PAVING, AND TRAFFIC, REFERENCED ABOVE, AND SUPPLEMENTS, ADDENDA, AND AMENDMENTS THERETO, AT NO ADDITIONAL COST TO THE OWNING AUTHORITY.
5. CONTRACTOR SHALL NOTIFY THE OFFICE OF THE CITY ENGINEER, HOUSTON PUBLIC WORKS IN WRITING PRIOR TO COMMENCING CONSTRUCTION.
6. ADEQUATE DRAINAGE SHALL BE MAINTAINED AT ALL TIMES DURING CONSTRUCTION AND ANY DRAINAGE DITCH OR STRUCTURE DISTURBED DURING CONSTRUCTION SHALL BE RESTORED TO EXISTING CONDITIONS OR BETTER AND TO THE SATISFACTION OF THE OWNING AUTHORITY.
7. CONTRACTOR SHALL COMPLY WITH LATEST EDITION OF OSHA REGULATIONS AND THE STATE OF TEXAS LAWS CONCERNING EXCAVATION.
8. CONTRACTOR SHALL TAKE NECESSARY PRECAUTIONS TO PROTECT ROOT SYSTEMS OF SHRUBS, PLANTS AND TREES ALONG THE AREA OF EXCAVATION.
9. CONTRACTOR SHALL MAINTAIN A SET OF REDLINE DRAWINGS AND RECORD AS-BUILT CONDITIONS DURING CONSTRUCTION. THESE AS-BUILT DRAWINGS WILL BE SUBMITTED TO THE DESIGN CONSULTANT WHO WILL MAKE THE CHANGES ON THE ORIGINAL TRACINGS, LABEL EACH SHEET IN THE SET AS "RECORD DRAWINGS", AND RETURN IT TO THE OFFICE OF THE CITY ENGINEER.
10. THE CONTRACTOR SHALL CONFINE ALL CONSTRUCTION ACTIVITIES STRICTLY WITHIN THE LIMITS OF THE CONSTRUCTION EASEMENT AND WATER LINE EASEMENT.
11. THE TEMPORARY CONSTRUCTION EASEMENT LOCATED IN FRONT OF THE BUSINESS SHALL BE USED FOR TEMPORARY MATERIAL AND EQUIPMENT STORAGE DURING ACTIVE CONSTRUCTION ON THE ADJACENT SECTION OF THE WATER LINE (WL).
12. THE CONTRACTOR SHALL ALWAYS MAINTAIN CONTINUOUS AND UNOBSTRUCTED ACCESS TO ALL BUSINESSES WITHIN THE AFFECTED AREA.

STORM SEWER CONSTRUCTION NOTES

1. STORM SEWER SHALL BE REINFORCED CONCRETE PIPE (C-76, CLASS III), AND SHALL BE INSTALLED, BEDDED, AND BACKFILLED IN ACCORDANCE WITH THE CITY OF HOUSTON DRAWING NOS. 02317-02, 02317-03, 02317-05, 02317-06, AND 02317-07 (OCT. 2002) AS APPLICABLE UNLESS OTHERWISE SHOWN ON THE DRAWINGS.
2. ALL STORM SEWER CONSTRUCTED IN SIDELOT EASEMENT SHALL BE R.C.P. (C-76, CLASS III) AND SHALL BE EMBEDDED IN ACCORDANCE WITH THE CITY OF HOUSTON DRAWING NOS. 02317-02, 02317-03, 02317-05, 02317-06, AND 02317-07 AS APPLICABLE.
3. ALL SEWER UNDER PROPOSED OR FUTURE PAVEMENT AND TO A POINT ONE (1) FOOT BACK OF ALL PROPOSED OR FUTURE CURBS SHALL BE BACKFILLED WITH 1-1/2 SACK CEMENT/C.Y. STABILIZED SAND TO WITHIN ONE (1) FOOT OF SUBGRADE. THE REMAINING DEPTH OF TRENCH SHALL BE BACKFILLED WITH SUITABLE EARTH MATERIAL.
4. ALL TRENCH BACKFILL SHALL BE IN 8" LIFTS, WITH TESTS TAKEN AT 100 FOOT INTERVALS IN EACH LIFT, AND MECHANICALLY COMPACTED TO A DENSITY OF NOT LESS THAN 95% OF THE MAXIMUM DRY DENSITY AS DETERMINED BY THE STANDARD PROCTOR COMACTION TEST (ASTM D-698/AASHTO T99).
5. CIRCULAR AND ELLIPTICAL REINFORCED CONCRETE PIPE SHALL BE INSTALLED USING RUBBER GASKET JOINT CONFORMING TO ASTM C443 AND ASTM C877 RESPECTIVELY.
6. MINIMUM HORIZONTAL CLEARANCE BETWEEN ANY STORM PIPE AND BOX SHALL BE AT LEAST 48-INCHES FROM EXTERIOR OF THE STORM PIPE OR BOX TO THE EXTERIOR OF THE EXISTING OR PROPOSED PUBLIC OR PRIVATE UTILITY AND OTHER APPURTENANCES. MINIMUM VERTICAL CLEARANCE BETWEEN ANY STORM PIPE AND BOX SHALL BE AT LEAST 18-INCHES FROM EXTERIOR OF THE STORM PIPE OR BOX TO THE EXTERIOR OF THE EXISTING OR PROPOSED PUBLIC OR PRIVATE UTILITY AND OTHER APPURTENANCES.
7. ADJUST MANHOLE COVERS TO GRADE CONFORMING TO REQUIREMENTS OF SECTION 02086-ADJUSTING MANHOLES, INLETS, AND VALVE BOXES TO GRADE.
8. THE CONTRACTOR SHALL BE RESPONSIBLE FOR PROTECTING, MAINTAINING, AND RESTORING ANY BACK SLOPE DRAINAGE SYSTEM DISTURBED AS A RESULT OF THIS WORK.
9. ALL DITCHES SHALL BE GRADED TO PROPOSED ELEVATIONS TO INSURE PROPER DRAINAGE. ALL OUTFALLS SHALL BE PROPERLY BACKFILLED AND COMPACTED. ALL DISTURBED AREA SHALL BE REGRADED, SEEDED, AND FERTILIZED.
10. ALL DRIVEWAYS WILL BE LOCATED TO AVOID EXISTING CURB INLET STRUCTURES.

WATER LINE CONSTRUCTION NOTES

1. WATER LINES SHALL BE CONSTRUCTED IN ACCORDANCE WITH THE LATEST CITY OF HOUSTON INFRASTRUCTURE DESIGN MANUAL, STANDARD SPECIFICATION, AND CONSTRUCTION DETAILS.
2. ALL 4" THROUGH 12" WATER LINE TO BE AWWA C-900 PVC DR-18 BLUE PRESSURE RATED WATER MAIN WITH 2" AND SMALLER WATER SERVICE LINE TO BE CONTINUOUS TYPE K COPPER TUBING PER COH STANDARD SPECIFICATION SECTION 02503. ALL 4" THRU 54" DI PIPE WATER LINES SHALL BE AWWA C151 WITH INSIDE LINING WITH AWWA C104 AND DOUBLE WRAPPED WITH 8-MIL POLYETHYLENE SHEETS.
3. CONCRETE THRUST BLOCKS SHALL BE PROVIDED AS NECESSARY TO PREVENT PIPE MOVEMENT. USE RESTRAINED JOINTS WHERE PREVENTING MOVEMENT OF 16" OR GREATER PIPE IS NECESSARY DUE TO THRUST.
4. ALL WATER LINES UNDER PROPOSED OR FUTURE PAVING AND TO A POINT OF ONE (1) FOOT BACK OF ALL PROPOSED OR FUTURE CURBS SHALL BE ENCASED IN BANK SAND TO 12" OVER PIPE AND BACKFILLED WITH CEMENT STABILIZED SAND TO WITHIN ONE (1) FOOT OF SUBGRADE.
5. ALL WATER LINE AND SEWER LINE CROSSINGS SHALL BE CONSTRUCTED PER CITY OF HOUSTON AND TCEQ REGULATIONS.
6. ALL WATER VALVES SHALL BE SUPPLIED AND INSTALLED IN ACCORDANCE WITH THE LATEST EDITION OF AWWA C-500 AND SHALL BE OF THE RESILIENT SEAT TYPE.
7. ALL WATER LINES TO BE DISINFECTED IN CONFORMANCE WITH AWWA C-651 AND THE TEXAS STATE DEPARTMENT OF HEALTH. AT LEAST ONE BACTERIOLOGICAL SAMPLE SHALL BE COLLECTED FOR EVERY 1,000 LINEAR FEET OF WATER LINE AND SHALL BE REPEATED IF CONTAMINATION PERSISTS.
8. ALL BELOW GRADE VALVES SHALL BE GASKETED, HUB-END GATE VALVES WITH A CAST IRON BOX, EXCEPT WHERE FLANGES ARE CALLED OUT ON THE PLANS.
9. 4" THRU 12" FITTINGS SHALL BE CEMENT MORTAR LINED COMPACT DUCTILE IRON PRESSURE FITTINGS PER ANSI A21.53, OR PUSH-ON FITTINGS PER ANSI A21.10 PRESSURE RATED AT 250 PSIG.
10. HYDROSTATIC TESTING: ALL WATER PIPES SHALL BE TESTED FOR LEAKAGE IN ACCORDANCE WITH THE LATEST CITY OF HOUSTON STANDARD CONSTRUCTION SPECIFICATIONS. TESTS ARE TO BE PERFORMED ON THE ENTIRE FOOTAGE OF WATER PIPE LINE INCLUDED IN THE PROJECT.
11. ALL WATER LINES TO HAVE 4' MINIMUM COVER TO FINISHED GRADE AND MINIMUM 12" CLEARANCE TO OTHER UTILITIES AT CROSSING UNLESS OTHERWISE NOTED ON PLANS. ALL WATER LINE INSTALLED OVER 8' DEEP SHALL UTILIZE RESTRAINED JOINT FITTINGS.
12. CONTRACTOR SHALL KEEP WATER PIPE CLEAN AND CAPPED (OR OTHERWISE EFFECTIVELY COVERED) OPEN PIPE ENDS TO EXCLUDE INSECTS, ANIMALS OR OTHER SOURCES OF CONTAMINATION FROM UNFINISHED PIPE LINES AT TIMES WHEN CONSTRUCTION IS NOT IN PROGRESS.
13. PLACE 1 FULL SECTION (MIN 18 FT) OF SANITARY SEWER CENTERED AT WATER LINE CROSSING. PROVIDE RESTRAINED JOINTS ON SANITARY SEWER, SPACED AT LEAST 9 FT HORIZONTALLY FROM CENTERLINE OF WATERLINE.
14. REPLACE ONE FULL SECTION OF EXISTING SANITARY SEWER WITH PRESSURE-RATED DUCTILE IRON PIPE. EMBED SANITARY SEWER WITH CEMENT STABILIZED SAND FOR THE TOTAL LENGTH OF ONE PIPE SEGMENT PLUS ONE FOOT BEYOND THE JOINT ON EACH END.
15. WATER LINE TO BE DUCTILE IRON PIPE AT SANITARY SEWER CROSSING.

GRADING NOTES

1. GENERAL CONTRACTOR AND ALL SUBCONTRACTORS SHALL VERIFY THE SUITABILITY OF ALL EXISTING AND PROPOSED SITE CONDITIONS INCLUDING GRADES AND DIMENSIONS BEFORE STARTING CONSTRUCTION. THE ENGINEER SHALL BE NOTIFIED IMMEDIATELY OF ANY DISCREPANCIES.
2. BEFORE STARTING CONSTRUCTION, CONTRACTOR SHALL VERIFY BENCHMARK ELEVATION AND NOTIFY ENGINEER IF ANY DISCREPANCY AND/OR CONFLICT IS FOUND.
3. CONTRACTOR SHALL ENSURE THERE IS POSITIVE DRAINAGE FROM THE PROPOSED BUILDINGS AND NO PONDING IN PAVED AREAS, AND SHALL NOTIFY ENGINEER IF ANY GRADING DISCREPANCIES ARE FOUND IN THE EXISTING AND PROPOSED GRADES PRIOR TO PLACEMENT OF PAVEMENT OR UTILITIES.
4. CONTRACTOR SHALL PROTECT ALL MANHOLE COVERS, VALVE COVERS, VAULT LIDS, FIRE HYDRANTS, POWER POLES, GUY WIRES, AND TELEPHONE BOXES THAT ARE TO REMAIN IN PLACE AND UNDISTURBED DURING CONSTRUCTION.
5. ALL EXISTING CONCRETE PAVING, SIDEWALK, AND CURB DEMOLITION SHALL BE REMOVED AND DISPOSED OF BY CONTRACTOR. DISPOSAL SHALL BE AT AN APPROVED OFF-SITE, LAWFUL LOCATION, UNLESS DIRECTED OTHERWISE BY THE OWNER.

SWPPP CONSTRUCTION NOTES

1. CONTRACTOR SHALL IMPLEMENT INLET PROTECTION DEVICES AND REINFORCED FILTER FABRIC BARRIER ALONG ROAD AND SIDE DITCHES AT LOCATIONS SHOWN ON THE TYPICAL STORM WATER POLLUTION PREVENTION PLANS (SWPPP) TO KEEP SILT AND OR EXCAVATED MATERIALS FROM ENTERING INTO THE STORM WATER INLETS AND DITCHES EVENTUALLY POLLUTING THE RECEIVING STORM.
2. DURING THE EXCAVATION PHASE OF THE PROJECT, CONTRACTOR SHALL SCHEDULE THE WORK IN SHORT SEGMENTS SO THAT EXCAVATION MATERIAL CAN BE QUICKLY HAULED AWAY FROM THE SITE AND TO PREVENT IT FROM STAYING UNCOLLECTED ON THE EXISTING PAVEMENT. ANY LOOSE EXCAVATED MATERIAL WHICH FALLS ON PAVEMENTS OR DRIVEWAYS SHALL BE SWEPT BACK INTO THE EXCAVATED AREA.
4. CONTRACTOR TO INSPECT AND MAINTAIN THE AREAS LISTED BELOW AT LEAST ONCE EVERY FOURTEEN (14) CALENDAR DAYS AND WITHIN 24 HOURS OF THE END OF A STORM EVENT OF 0.5 INCHES OR GREATER.
   - DISTURBED AREAS OF THE CONSTRUCTION SITE THAT HAVE NOT BEEN FINALLY STABILIZED.
   - AREAS USED FOR STORAGE OF MATERIALS THAT ARE EXPOSED TO PRECIPITATION.
   - STRUCTURAL CONTROL MEASURES.
   - LOCATIONS WHERE VEHICLES ENTER OR EXIT THE SITE.
5. CONTRACTOR TO BE RESPONSIBLE TO MAINTAIN EXISTING DITCHES AND/OR CULVERTS FOR UNOBSTRUCTED DRAINAGE AT ALL TIMES. WHERE SODDING IS DISTURBED BY EXCAVATION ON BACKFILLING OPERATIONS, SUCH AREAS SHALL BE REPLACED BY SEEDING OR SODDING. SLOPES 4:1 OR STEEPER SHALL BE REPLACED BY BLOCK SODDING.
6. CONTRACTOR SHALL REMOVE AND/OR REPLACE INLET PROTECTION BARRIER BEFORE AND AFTER A SEVERE WEATHER EVENT AT THE REQUEST OF THE CITY OF HOUSTON.

STANDARD HCFCD NOTES FOR CONSTRUCTION DRAWINGS

1. OBTAIN AND COMPLY WITH ALL APPLICABLE CITY, COUNTY, STATE, AND FEDERAL PERMITS AND APPROVALS, WITH ASSISTANCE FROM ENGINEER, IF NECESSARY. OBTAIN PERMIT (CERTIFICATION) FROM HARRIS COUNTY ENGINEER TO ENTER HARRIS COUNTY FLOOD CONTROL DISTRICT RIGHT-OF-WAY.
2. NOTIFY THE HARRIS COUNTY FLOOD CONTROL DISTRICT'S PROPERTY MANAGEMENT DEPARTMENT IN WRITING AT LEAST 48 HOURS PRIOR TO CONSTRUCTION. SUBMIT THE HCFCD 48 HOUR PRE-CONSTRUCTION NOTIFICATION FORM, A COPY OF THE APPROVED CONSTRUCTION DRAWINGS, AND A COPY OF THE CORPS OF ENGINEERS INDIVIDUAL SECTION 404 PERMIT OR COMPLIANCE WITH NATIONWIDE PERMIT, IF APPLICABLE, TO HCFCD, 9900 NORTHWEST FREEWAY, HOUSTON, TEXAS 77092, ATTN: DEVELOPMENT COORDINATION AND INSPECTION DEPT. BY HAND DELIVERY, BY EMAIL DCID@HCFCD.ORG, OR FAX TO 713-684-4129 (FAX NUMBER).
3. ENGINEER SHALL SUBMIT CERTIFICATION LETTER AND RECORD DRAWINGS TO THE HARRIS COUNTY FLOOD CONTROL DISTRICT'S DEVELOPMENT COORDINATION AND INSPECTION SECTION REQUESTING INSPECTION OF ITEMS CONSTRUCTED IN HARRIS COUNTY FLOOD CONTROL DISTRICT RIGHT-OF-WAY. PRIOR TO REQUESTING INSPECTION, THE DRAINAGE RIGHT-OF-WAY AND/OR EASEMENTS SHALL BE STAKED AND FLAGGED.
4. PROTECT, MAINTAIN, AND RESTORE EXISTING BACKSLOPE DRAINAGE SYSTEMS.
5. BACKSLOPE SWALE AND INTERCEPTOR STRUCTURE ELEVATIONS AND LOCATIONS SHOWN ON PLANS ARE APPROXIMATE. FINAL ELEVATIONS AND LOCATIONS SHALL BE FIELD VERIFIED BY THE ENGINEER PRIOR TO INSTALLATION.
6. ESTABLISH TURF GRASS ON ALL DISTURBED AREAS WITHIN THE CHANNEL OR DETENTION RIGHT-OF-WAY, EXCEPT THE CHANNEL BOTTOM AND WHERE STRUCTURAL EROSION MEASURES ARE USED. MINIMUM ACCEPTANCE CRITERIA ARE 75% COVERAGE OF LIVE BERMUDA GRASS AND NO EROSION OR RILLS DEEPER THAN 4".
7. PERFORM ALL ACTIVITIES WITHIN HARRIS COUNTY FLOOD CONTROL DISTRICT RIGHT-OF-WAY IN ACCORDANCE WITH THE MOST RECENT HARRIS COUNTY FLOOD CONTROL DISTRICT STANDARD SPECIFICATIONS BOOK.
8. EXCAVATE CHANNEL FLOWLINE TO DESIGN ELEVATION AS SHOWN ON PLANS AND DOWNSTREAM, AS NECESSARY, TO ENSURE NO WATER REMAINS IN THE FACILITY (STORM SEWER, LATERAL CHANNEL, OR DRY BOTTOM DETENTION BASIN) DURING NORMAL WATER SURFACE CONDITIONS IN THE CHANNEL, SO THE FACILITY WILL FUNCTION AS INTENDED. FOR WET BOTTOM DETENTION BASINS, ENSURE NO WATER IS ABOVE THE DESIGN LEVEL IN THE WET BOTTOM DURING NORMAL WATER SURFACE CONDITIONS IN THE CHANNEL.
9. MAINTAIN FLOW IN CHANNEL DURING CONSTRUCTION AND RESTORE CHANNEL TO ORIGINAL CONDITION.
10. REMOVE ALL EXCAVATED MATERIAL FROM THE HARRIS COUNTY FLOOD CONTROL DISTRICT OR DRAINAGE RIGHT-OF-WAY. NO FILL IS TO BE PLACED WITHIN A DESIGNATED FLOOD PLAIN AREA WITHOUT FIRST OBTAINING A FILL PERMIT FROM THE APPROPRIATE JURISDICTIONAL AUTHORITY.

CONTRACTOR WORK ZONE NOTES

1. DRIVEWAY ACCESS WILL BE MAINTAINED OPEN AFTER WORKING HOURS. A MINIMUM OF ONE DRIVEWAY ACCESS WILL BE MAINTAINED OPEN AT ALL TIMES TO COMMERCIAL, APARTMENTS, AND/OR NON-RESIDENTIAL DEVELOPMENTS.
2. THE LENGTH OF THE WORK ZONE MUST BE MINIMIZED WITHIN THE HARRIS COUNTY ROW OR EASEMENTS. THERE SHALL NOT BE MORE THAN 200-FEET OF TRENCH OPEN AT ANY ONE TIME. THE CONSTRUCTION ZONE WILL BE A ROLLING CONSTRUCTION ZONE WITH APPROPRIATE TRANSITIONS ON EACH END UNLESS OTHERWISE SHOWN IN PLANS AND SPECIFICATIONS.
3. SIGNALIZED INTERSECTIONS: LANES WILL NOT BE CLOSED AT A SIGNALIZED INTERSECTION, UNLESS APPROVED BY THE COUNTY ENGINEER AND SHOWN IN THE PLANS AND SPECIFICATIONS.
4. TEMPORARY PAVEMENT MARKERS: TEMPORARY EPOXY-GLUED BOTTONS OR "CONSTRUCTION GRADE" TAPE PAVEMENT MARKERS SHOULD BE USED ON PERMANENT PAVEMENT TO ELIMINATE GRINDING AND SCARRING OF THE SURFACE.
5. PEDESTRIAN TRAFFIC: CARE SHALL BE TAKEN TO PROVIDE FOR TEMPORARY PEDESTRIAN TRAFFIC AND CROSSING AT AREAS SUCH AS SCHOOLS, PARKS, AND SHOPPING AREAS.

SANITARY SEWERS CONSTRUCTION NOTES

1. ALL SEWERS SHALL BE SUBJECT TO A STANDARD EXFILTRATION TEST. TESTS ARE TO BE PERFORMED ON THE TOTAL FOOTAGE OF SEWER LINE INCLUDED IN THE PROJECT. REQUIREMENTS OF TEXAS ADMINISTRATIVE CODE, TITLE 30 CHAPTER 217, "DESIGN CRITERIA FOR DOMESTIC WASTEWATER SYSTEMS" SHALL GOVERN WHERE CONFLICTS EXIST EXCEPT WHERE CITY REQUIREMENTS ARE MORE STRINGENT.
2. ALL MANHOLES ARE TO BE PER CITY OF HOUSTON STANDARD DETAILS DRAWING NUMBERS 02082-01, 02082-02, 02082N-02, 02082-03, AND 02082N-03 UNLESS OTHERWISE NOTED. USE THE LATEST VERSION AS APPLICABLE.
3. SANITARY SEWER MANHOLES WILL HAVE BEDDING AND BACKFILL PER CITY OF HOUSTON STANDARD DETAILS DRAWING NO. 02317-08 UNLESS OTHERWISE NOTED.
4. THE SANITARY SEWER PVC PIPE SHALL BE ASTM D 3034 TYPE PSM SDR 26 GRAVITY SEWER PIPE, ASTM D2241 SDR 26 PRESSURE RATED SEWER PIPE OR AWWA C-900 DR-18 GREEN PVC PRESSURE RATED SEWER PIPE BASED ON CONSTRUCTION CONDITION REQUIREMENT AND CONFORMING TO ASTM D1784 AND CITY OF HOUSTON STANDARD SPECIFICATION SECTION 02506 POLYVINYL CHLORIDE PIPE.
5. WHEN SS PRESSURE RATED PVC PIPE IS USED ON WATERLINE (WL) CROSSING UNDER CONDITION 1 OF COH IDM TABLE 7.3, THE SAME TYPE OF D2241 SDR 26 PVC PIPE OR C-900 GREEN DR-18 PVC GREEN PRESSURED TO BE UTILIZING IN-BETWEEN TWO SS MHS. OR TO UTILIZE A DI TRANSITION ADAPTER FOR THE CONNECTING OF ASTM D-3034 PVC GRAVITY PIPE TO DI-OD AWWA C-900 PVC PIPE CENTERED AT WL WHEN CONNECTING TWO DIFFERENT TYPES OF PVC PIPES FOR SEWER CONSTRUCTION.
6. AWWA C-900 DR-18 PVC PIPE USES EITHER AWWA C900 DR-18 PVC FITTINGS OR DIP FITTINGS.
7. ALL SANITARY SEWER LINES UNDER PROPOSED OR FUTURE PAVEMENT AND TO A POINT ONE (1) FOOT BACK OF ALL PROPOSED OR FUTURE CURBS SHALL HAVE BEDDING PER CITY OF HOUSTON STANDARD DETAILS DRAWING NUMBERS 02317-01, 02317-02, OR 02317-03 AS APPLICABLE, WITH 1 ½ SACK CEMENT/CY STABILIZED SAND BACKFILL UP TO THE BOTTOM OF THE PAVEMENT SUBGRADE. 100 PSI PERFORMANCE RESULTS ARE STILL REQUIRED.
8. ALL NEW SANITARY SEWERS CROSSING WATER LINES WITH A CLEARANCE BETWEEN 12 INCHES AND 9 FEET SHALL HAVE A MINIMUM OF ONE 18'JOINT OF DUCTILE IRON OR (GREEN) C900 PVC PIPE MEETING ASTM SPECIFICATION D2241 CENTERED ON WATER LINE. WHEN WATER LINE IS BELOW SANITARY SEWER, PROVIDE MINIMUM 2 FOOT SEPARATION.
9. CONTRACTOR SHALL PROVIDE A MINIMUM HORIZONTAL CLEARANCE OF 9'FEET BETWEEN WATER LINES AND SANITARY SEWER MANHOLES AND LINES.
10. SANITARY SEWER MANHOLE RIMS OUTSIDE OF PROPOSED PAVING WILL BE SET 3"- 6" ABOVE THE SURROUNDING LEVEL FINISHED GRADE AFTER PAVING WITH SLOPED BACKFILL ADDED FOR STORM WATER TO DRAIN AWAY FROM MANHOLE RIM.
11. IN WET STABLE TRENCH AREAS USE BEDDING PER CITY OF HOUSTON STANDARD DETAILS DRAWING NUMBER 02317-02.
12. DEFLECTION TEST: DEFLECTION TESTS SHALL BE PERFORMED ON ALL FLEXIBLE AND SEMI-RIGID SEWER PIPE. THE TEST SHALL BE CONDUCTED AFTER THE FINAL BACKFILL HAS BEEN IN PLACE AT LEAST 30 DAYS. NO PIPE SHALL EXCEED A DEFLECTION OF 5% IF THE DEFLECTION TEST IS TO BE RUN USING A RIGID MANDREL, IT SHALL HAVE A DIAMETER EQUAL TO 95% OF THE INSIDE DIAMETER OF THE PIPE. THE TEST SHALL BE PERFORMED AS PER 30 TAC 217.57 LATEST AMENDMENT AND WITHOUT MECHANICAL PULLING DEVICES. NO BALL-TYPE MANDREL IS ALLOWED.
13. INFILTRATION, EXFILTRATION OR LOW-PRESSURE AIR TEST: EITHER OF THE FOLLOWING TESTS SHALL BE PERFORMED AS PER TAC, TITLE 30 217.57 WITHIN THE SPECIFIED TOLERANCES ON ALL GRAVITY SEWERS.

A. INFILTRATION OR EXFILTRATION TEST: TOTAL LEAKAGE AS DETERMINED BY A HYDROSTATIC HEAD TEST SHALL NOT EXCEED 50 GALLONS PER INCH DIAMETER PER MILE OF PIPE PER 24 HOURS AT A MINIMUM TEST HEAD OF TWO (2) FEET.

B. LOW-PRESSURE AIR TEST: PERFORM TEST ACCORDING TO UNI-B-6-90 OR OTHER APPROPRIATE PROCEDURES. FOR SECTIONS OF PIPE LESS THAN 36"(INCH) AVERAGE INSIDE DIAMETER, THE MINIMUM ALLOWABLE TIME FOR PRESSURE DROP FROM 3.5 P.S.I.G. TO 2.5 P.S.I.G. SHALL BE AS FOLLOWS:

6"340 SECONDS OR 0.855(L) FOR TEST LENGTHS GREATER THAN 398'
8"454 SECONDS OR 1.520(L) FOR TEST LENGTHS GREATER THAN 298'
10"567 SECONDS OR 2.374(L) FOR TEST LENGTHS GREATER THAN 239'
12"680 SECONDS OR 3.419(L) FOR TEST LENGTHS GREATER THAN 199'
15"850 SECONDS OR 5.342(L) FOR TEST LENGTHS GREATER THAN 159'
18"1020 SECONDS OR 7.693(L) FOR TEST LENGTHS GREATER THAN 133'

WHERE L = LENGTH OF LINE OF SAME PIPE SIZE IN FEET.

14. "SAN. S. E."INDICATES "SANITARY SEWER EASEMENT"
15. FOR SANITARY MANHOLE (MH) RIMS SET INSIDE OF OR @ CURB & GUTTER PAVEMENT AND/OR BELOW T.C., MH RIMS WILL BE SET FLUSHED WITH AN ABUTTING PAVED SURFACE. THE (VALCUN, NEENAH OR EQUAL) HEAVY DUTY BOLTED SOLID MH COVER SHALL BE PROPERLY (AND SECURELY) ATTACHED AND SEALED TO ITS COMPATIBLE GASKETED FRAME BY USING BOTH A NEOPRENE GASKET AND (AT LEAST) 4 COUNTER-SUNK HEX-HEAD COARSE THREADED ½"-13 UNC STAINLESS STEEL BOLTS. THE HEAVY DUTY FRAME MH COVER SHALL BE SOLID (NO AIR HOLES). SAID FRAME SHALL BE BOTH EMBEDDED INTO THE MH'S TOP ALSO SECURELY ANCHORED TO THE UNDERLYING MH STRUCTURE WITH EITHER SECURELY ATTACHED EMBEDDED ANCHOR BOLTS OR THE CONCRETE MH'S EXPOSED REBARS WELDED TO THE FRAME OR OTHER EQUALLY SECURED METHODS TO PREVENT MH COVER/FRAME BLOW-OFFS/EJECTIONS.

STANDARD HARRIS COUNTY NOTES FOR PLANS

1. AUTHORIZATION NOTICE ISSUED BY HARRIS COUNTY PUBLIC INFRASTRUCTURE ENGINEERING DEPARTMENT PERMIT OFFICE REQUIRED PRIOR TO CONSTRUCTION OF UTILITIES OR LEFT TURN LANES WITHIN HARRIS COUNTY RIGHTS-OF-WAY. CONTACT HARRIS COUNTY PERMIT OFFICE (713)956-3000.
2. AUTHORIZATION NOTICES ISSUED BY HARRIS COUNTY PUBLIC INFRSTRUCTURE ENGINEEERING DEPARTMENT PERMIT OFFICE REQUIRED PRIOR TO CONSTRUCTION WITHIN HARRIS COUNTY FLOOD CONTROL RIGHT-OF-WAY. CONTACT HARRIS COUNTY PERMIT OFFICE (713)956-3000.
3. VENT PIPES WITHIN HARRIS COUNTY RIGHT-OF-WAY SHALL BE BREAKAWAY, PER DETAILS, UNESS OTHERWIDE INDICATED ON DRAWINGS AND APPROVED NY HARRIS COUNTY PUBLIC INFRASTRUCTURE ENGINEERING DEPARTMENT.
4. CONTRACTOR IS FULLY RESPONSIBLE FOR OBTAINING ALL PERMIT REQUIRED BY THE "REGULATIONS OF HARRIS COUNTY, TEXAS FOR FLOOD PLAIN MANAGEMENT" PRIOR TO START OF CONSTRUCTION.

HARRIS COUNTY APPENDIX D NOTES

1. WATER LINES, WASTEWATER COLLECTION SYSTEMS, AND STORM DRAINAGE SYSTEMS SHALL BE DESIGNED AND CONSTRUCTED IN ACCORDANCE WITH THE CITY OF HOUSTON'S, DEPARTMENT OF PUBLIC WORKS AND ENGINEERING 'DESIGN MANUAL, STANDARD CONSTRUCTION SPECIFICATIONS, AND DETAILS FOR WASTEWATER COLLECTION SYSTEMS, WATER LINES, STORM DRAINAGE AND STREET PAVING":
2. ALL STORM SEWER WILL BE REINFORCED CONCRETE (C76 CLASS III) AND SHALL BE INSTALLED, BEDDED AND BACKFILLED IN ACCORDANCE WITH THE CITY OF HOUSTON'S DRAWINGS 02317-02, 02317-03, 02317-05, 02317-06 AND 02317-07 AS APPLICABLE.
3. ALL STORM SEWERS CONSTRUCTED IN SIDE LOT EASEMENTS SHALL BE R.C.P., MINIMUM TWENTY (20) FOOT WIDE EASEMENTS SHALL BE PROVIDED.
4. AN ALTERNATIVE TO CEMENT STABILIZED SAND MAY BE USED AS BACKFILL FOR PIPES FIFTY-FOUR (54) INCH AND LARGER, FROM 1-FOOT ABOVE THE TOP OF THE PIPE TO THE BOTTOM OF THE SUBGRADE. CONTRACTOR MAY BACKFILL WITH SUITABLE MATERIAL, PROVIDED THE BACKFILL MATERIAL IS PLACED IN EIGHT (8) INCH LIFTS AND MECHANICALLY COMPACTED TO NINETY-FIVE (95)% STANDARD PROCTOR DENSITY. TESTS SHALL BE TAKEN AT ONE HUNDRED (100) FOOT INTERVALS ON EACH LIFT. BEDDING AND BACKFILL TO ONE (1) FOOT ABOVE THE TOP OF THE PIPE SHALL BE CEMENT-STABILIZED SAND.
5. ALL PROPOSED PIPE STUB-OUTS FROM MANHOLES/JUNCTION BOXES OR INLETS ARE TO BE PLUGGED WITH EIGHT (8) INCH BRICK WALLS UNLESS OTHERWISE NOTED.
6. THE CONTRACTOR(S) SHALL NOTIFY HARRIS COUNTY ENGINEERING DEPARTMENT - PERMIT OFFICE TWENTY-FOUR (24) HOURS IN ADVANCE OF COMMENCING UTILITY AND/OR PAVING CONSTRUCTION AT (713) 274-3931 AND WRITTEN NOTIFICATION FORTY- EIGHT (48) HOURS IN ADVANCE OF COMMENCING CONSTRUCTION AT 1111 FANNIN STREET 8TH FLOOR, HOUSTON, TEXAS, 77022.
7. PAVING SHALL BE IN ACCORDANCE WITH THE "REGULATIONS OF HARRIS COUNTY, TEXAS FOR THE APPROVAL AND ACCEPTANCE OF INFRASTRUCTURE" AND/OR AMENDMENTS OF THE SAME.
8. GUIDELINES SET FORTH IN THE LATEST EDITION OF THE "TEXAS MANUAL ON UNIFORM TRAFFIC CONTROL DEVICES, TMUCD WITH REVISIONS" SHALL BE OBSERVED.
9. OWNER OR OWNER'S AGENT TO OBTAIN ALL PERMITS REQUIRED BY THE "REGULATIONS OF HARRIS COUNTY, TEXAS FOR FLOODPLAIN MANAGEMENT" PRIOR TO STARTING CONSTRUCTION.
10. OWNER OR OWNER'S AGENT TO OBTAIN ALL NOTIFICATIONS REQUIRED BY HARRIS COUNTY, TEXAS PRIOR TO STARTING CONSTRUCTION OF UTILITIES AND/OR CULVERTS WITHIN HARRIS COUNTY AND HARRIS COUNTY FLOOD CONTROL DISTRICT RIGHTS-OF-WAY.

RPS
A TETRA TECH COMPANY
Texas PE Firm Reg. #F-929
575 N. Dairy Ashford, Suite 700,
Houston, Texas 77079
T +1 281 589 7257
E usinfrastructure@rpsgroup.com

SURVEYED BY: KUO Inc.
FB NO. F-4578

This document is released for the purposes of interim review only under the authority of:

Jeremy Austin, P.E.
Texas P.E. No. 116816
**

UTILITY NOTES

CENTERPOINT ENERGY

CAUTION: UNDERGROUND GAS FACILITIES

THE CONTRACTOR SHALL CONTACT THE UTILITY COORDINATING COMMITTEE AT 1-800-545-6005 OR 811 A MINIMUM OF 48 HOURS PRIOR TO CONSTRUCTION TO HAVE MAIN AND SERVICE LINES FIELD LOCATED.

- WHEN CENTERPOINT ENERGY PIPE LINE MARKINGS ARE NOT VISIBLE, CALL (713) 207-5463 OR (713) 945-8037 (7:00 A.M. TO 4:30 P.M.) FOR STATUS OF LINE LOCATION REQUEST BEFORE EXCAVATION BEGINS.
- WHEN EXCAVATING WITHIN EIGHTEEN INCHES (18") OF THE INDICATED LOCATION OF CENTERPOINT ENERGY FACILITIES, ALL EXCAVATION MUST BE ACCOMPLISHED USING NON-MECHANIZED EXCAVATION PROCEDURES.
- WHEN CENTERPOINT ENERGY FACILITIES ARE EXPOSED, SUFFICIENT SUPPORT MUST BE PROVIDED TO THE FACILITIES TO PREVENT EXCESSIVE STRESS ON THE PIPING.
- FOR EMERGENCIES REGARDING GAS LINES CALL (713) 659-2111 OR (713) 207-4200.

THE CONTRACTOR IS FULLY RESPONSIBLE FOR ANY DAMAGES CAUSED BY HIS FAILURE TO EXACTLY LOCATE AND PRESERVE THESE UNDERGROUND FACILITIES.

WARNING: OVERHEAD ELECTRICAL LINES:

OVERHEAD LINES MAY EXIST ON THE PROPERTY. THE LOCATION OF OVERHEAD LINES HAS NOT BEEN SHOWN ON THESE DRAWINGS AS THE LINES ARE CLEARLY VISIBLE, BUT YOU SHOULD LOCATE THEM PRIOR TO BEGINNING ANY CONSTRUCTION. TEXAS LAW, SECTION 752, HEALTH & SAFETY CODE, FORBIDS ACTIVITIES THAT OCCUR IN CLOSE PROXIMITY TO HIGH VOLTAGE LINES, SPECIFICALLY:

- ANY ACTIVITY WHERE PERSON OR THINGS MAY COME WITHIN SIX (6) FEET OF LIVE OVERHEAD HIGH VOLTAGE LINES; AND
- OPERATING A CRANE, DERRICK, POWER SHOVEL, DRILLING RIG, PILE DRIVER, HOISTING EQUIPMENT, OR SIMILAR APPARATUS WITHIN 10 FEET OF LIVE OVERHEAD HIGH VOLTAGE LINES.

PARTIES RESPONSIBLE FOR THE WORK, INCLUDING CONTRACTORS, ARE LEGALLY RESPONSIBLE FOR THE SAFETY OF CONSTRUCTION WORKERS UNDER THIS LAW. THIS LAW CARRIES BOTH CRIMINAL AND CIVIL LIABILITY. TO ARRANGE FOR LINES TO BE TURNED OFF OR REMOVED CALL CENTERPOINT ENERGY AT (713) 207-2222.

ACTIVITIES ON OR ACROSS CENTERPOINT ENERGY FEE OR EASEMENT PROPERTY

NO APPROVAL TO USE, CROSS OR OCCUPY CENTERPOINT FEE OR EASEMENT PROPERTY IS GIVEN. IF YOU NEED TO USE CENTERPOINT PROPERTY, PLEASE CONTACT OUR SURVEYING AND RIGHT OF WAY DIVISION AT (713) 207-6348 OR (713) 207-5769.

WARNING: UNDERGROUND ELECTRICAL UTILITIES:

THE CONTRACTOR SHALL CONTACT THE UTILITY COORDINATING COMMITTEE AT 1-800-545-6005 OR 811 A MINIMUM OF 48 HOURS PRIOR TO CONSTRUCTION TO HAVE MAIN AND SERVICE LINES FIELD LOCATED.

- ALL INFORMATION CONCERNING TYPE AND LOCATION OF UNDERGROUND UTILITIES IS NOT GUARANTEED TO BE ACCURATE OR ALL INCLUSIVE. THE CONTRACTORS ARE RESPONSIBLE MAKING THEIR OWN DETERMINATIONS AS TO TYPE AND LOCATION OF UNDERGROUND UTILITIES AS MAY BE NECESSARY TO AVOID DAMAGE THERETO. THE CONTRACTOR SHALL VERIFY LOCATION OF UNDERGROUND PIPELINES, CONDUITS, AND STRUCTURES BY CONTACTING OWNERS OF UNDERGROUND UTILITIES OR BY EXCAVATING IN ADVANCE OF CONSTRUCTION.
- THE CONTRACTOR IS RESPONSIBLE FOR DETERMINING THE EXACT LOCATION OF ALL UTILITIES WHEN AND WHERE THEY FALL IN THE PATH OF CONSTRUCTION.
- THE CONTRACTOR IS ALSO RESPONSIBLE FOR CONTACTING THE UTILITY COORDINATING COMMITTEE AT (713) 223-4567 AND TEXAS ONE CALL AT 1-800-245-4545, FORTY-EIGHT (48) HOURS PRIOR TO ANY CONSTRUCTION.
- THE LOCATION OF ANY CENTERPOINT ENERGY UTILITIES ARE SHOWN IN APPROXIMATE WAY ONLY. THE CONTRACTOR SHALL DETERMINE THE EXACT LOCATION BEFORE COMMENCING WORK. THEY AGREE TO BE FULLY RESPONSIBLE FOR ANY AND ALL DAMAGES WHICH MIGHT BE OCCASIONED BY THIS FAILURE TO EXACTLY LOCATE AND PRESERVE THESE UNDERGROUND UTILITIES.
- ALL PROPOSED FACILITIES SHALL MAINTAIN 12□CLEAR FROM ALL EXISTING UTILITIES.

COMCAST

1. THE LOCATION OF COMCAST CABLE FACILITIES ARE SHOWN IN AN APPROXIMATE WAY ONLY. THE CONTRACTOR WILL DETERMINE THE EXACT LOCATION BEFORE COMMENCING WORK. CONTRACTOR AGREES TO BE FULLY RESPONSIBLE FOR ANY AND ALL DAMAGES, WHICH MIGHT BE OCCASIONED BY THIS FAILURE TO EXACTLY LOCATE AND PRESERVE THESE UNDERGROUND LINES FIELD LOCATED.
2. THE CONTRACTOR WILL CALL TEXAS ONE-CALL AT 1-800-245-4545 A MINIMUM OF 48 HOURS PRIOR TO CONSTRUCTION TO HAVE UNDERGROUND LINES FIELD LOCATED.
3. WHEN EXCAVATING WITHIN EIGHTEEN INCHES (18") OF THE INDICATED LOCATION OF COMCAST CABLE FACILITIES, ALL EXCAVATION MUST BE ACCOMPANIED USING NON-MECHANIZED EXCAVATION PROCEDURES. WHEN BORING, THE CONTRACTOR SHALL EXPOSE THE COMCAST CABLE FACILITIES.
4. WHEN COMCAST CABLE FACILITIES ARE EXPOSED, THE CONTRACTOR WILL PROVIDE SUPPORT TO PREVENT DAMAGE TO THE CONDUIT DUCTS OR CABLES. WHEN EXCAVATING NEAR TELEPHONE POLES, THE CONTRACTOR WILL BRACE THE POLE FOR SUPPORT.
5. THE CONTRACTOR WILL DETERMINE THE EXACT LOCATION OF THE UNDERGROUND FACILITIES BEFORE COMMENCING WORK AND AGREES TO BE FULLY RESPONSIBLE FOR ALL DAMAGES CAUSED BY THIS FAILURE TO EXACTLY LOCATE AND PRESERVE ALL UNDERGROUND FACILITIES.

AT&T TEXAS/SWBT FACILITIES

1. THE LOCATIONS OF AT&T TEXAS/SWBT FACILITIES ARE SHOWN IN AN APPROXIMATE WAY ONLY. THE CONTRACTOR SHALL DETERMINE THE EXACT LOCATION BEFORE COMMENCING WORK. HE AGREES TO BE FULLY RESPONSIBLE FOR ANY AND ALL DAMAGES WHICH MIGHT BE OCCASIONED BY THIS FAILURE TO EXACTLY LOCATE AND PRESERVE THESE UNDERGROUND UTILITIES.
2. THE CONTRACTOR SHALL CALL 1-800-344-8377 (TEXAS 811) A MINIMUM OF 48 HOURS PRIOR TO CONSTRUCTION TO HAVE UNDERGROUND LINES FIELD LOCATED.
3. WHEN EXCAVATING WITHIN EIGHTEEN INCHES (18") OF THE INDICATED LOCATION OF AT&T TEXAS/SWBT FACILITIES, ALL EXCAVATIONS MUST BE ACCOMPLISHED USING NON-MECHANIZED EXCAVATION PROCEDURES. WHEN BORING, THE CONTRACTOR SHALL EXPOSE THE AT&T TEXAS/SWBT FACILITIES.
4. WHEN AT&T TEXAS/SWBT FACILITIES ARE EXPOSED, THE CONTRACTOR WILL PROVIDE SUPPORT TO PREVENT DAMAGE TO THE CONDUIT DUCTS OR CABLES. WHEN EXCAVATING NEAR TELEPHONE POLES THE CONTRACTOR SHALL BRACE THE POLE FOR SUPPORT.
5. THE PRESENCE OR ABSENCE OF AT&T TEXAS/SWBT UNDERGROUND CONDUIT FACILITIES OR BURIED CABLE FACILITIES SHOWN ON THESE PLANS DOES NOT MEAN THAT THERE ARE NO DIRECT BURIED CABLES OR OTHER CABLES IN CONDUIT IN THE AREA.
6. PLEASE CONTACT THE AT&T TEXAS DAMAGE PREVENTION MANAGER KEVIN RAY AT (713) 614-1983 OR E-MAIL HIM AT kr7896@att.com, IF CABLE LOCATE REQUESTS ARE NOT COMPLETED FOR AT&T TEXAS/SWBT FACILITIES.

UTILITY COORDINATION

1. CENTERPOINT GAS AND ELECTRIC:
   - CONTRACTOR SHALL CONTACT CYNTHIA MARTINEZ AT CINDY.MARTINEZ@CENTERPOINTENERGY.COM AT LEAST 72 HOURS PRIOR TO CONSTRUCTION AROUND CENTERPOINT GAS AND ELECTRIC UTILITIES.
2. VERIZON:
   - CONTRACTOR SHALL CONTACT – MICHAEL MABE AT 832-917-7790 AND MICHAEL.MABE@VERIZON.COM AT LEAST 72 HOURS PRIOR TO CONSTRUCTION AROUND VERIZON FIBER/CABLE UTILITIES.
3. AT&T:
   - CONTRACTOR SHALL CONTACT KATHY TINNEY AT 713-485-8128 AND KT145J@ATT.COM AT LEAST 72 HOURS PRIOR TO CONSTRUCTION AROUND AT&T FIBER/CABLE UTILITIES.
4. COMCAST:
   - CONTRACTOR SHALL CONTACT CORY THOMAS AT CORY.THOMAS@COMCAST.COM AT LEAST 72 HOURS PRIOR TO CONSTRUCTION AROUND COMCAST FIBER/CABLE UTILITIES.

METRO NOTES

1. PRIOR TO CONSTRUCTION THE CONTRACTOR SHALL SECURE "TRACK ALLOCATION PERMITS" ISSUED BY METRO RAIL OPERATIONS. CONTACT EDDIE ESPINOSA (EDDIE.ESPINOSA@RIDEMETRO.ORG, 832-392-0758) FOR TRACK ALLOCATION REQUESTS AND TRACK ACCESS PROCEDURES.
2. ALL CONTRACTORS MUST SUCCESSFULLY COMPLETE THE ROADWAY WORKER PROTECTION TRAINING PRIOR TO CONSTRUCTION. THE COURSE IS HELD AT THE SERVICE AND INSPECTION FACILITY (S&I) LOCATED AT 5880 TEXAS STREET, HOUSTON, TEXAS 77011, ROOM #107 AND IS OFFERED IN BOTH ENGLISH AND SPANISH. CONTRACTOR MUST EMAIL TRACK.SAFETY@RIDEMETRO.ORG TO SCHEDULE THE CLASS. TRACK SAFETY CERTIFICATION FOR CONTRACTOR IS VALID FOR 1 YEAR.
3. TRACKWAY ALLOCATION REQUEST FORM MUST BE SUBMITTED BY 5:00 PM TUESDAY PRIOR TO THE WEEK OF THE SCHEDULED WORK.
4. WORK ACTIVITIES WITHIN TEN FEET OF THE OVERHEAD CONTACT SYSTEM (OCS) REQUIRE A RED TAG IN ADDITION TO A METRO RAIL WORK PERMIT. THE SUPERINTENDENT, RAIL CONTROL, OR DESIGNEE MAY ALSO REQUIRE A RED TAG DUE TO OTHER SPECIAL CONDITIONS OR SITUATIONS (E.G., CRANES, AREAS OF HEAVY CONSTRUCTION, ETC.).
5. THE CONTRACTOR SHALL BE RESPONSIBLE FOR REPAIRS TO ANY METRO FACILITIES DAMAGED DURING CONSTRUCTION. IF THE CONTRACTOR CANNOT IMMEDIATELY MAKE THE REPAIRS TO METRO'S SATISFACTION, METRO WILL MAKE THE REPAIRS AND BILL THE COST TO THE CONTRACTOR.
6. PRIOR TO CONSTRUCTION THE CONTRACTOR SHALL VERIFY IN THE FIELD THAT THERE ARE NO CONFLICTS WITH OUR FIBER OPTICS, COMMUNICATION, SIGNALING, ELECTRICAL POWER, HIGH VOLTAGE CABLES OR ANY OTHER METRO INFRASTRUCTURE.
7. THE CONTRACTOR SHALL CONTACT THE DIRECTOR OF PRECONSTRUCTION, CASEY MCKAY, BY EMAIL AT CASEY.MCKAY@RIDEMETRO.ORG OR BY PHONE 713-750-4236 ONE WEEK PRIOR TO CONSTRUCTION. THE CONSTRUCTION DEPARTMENT MAY ASSIGN AN INSPECTOR TO ASSURE NO DAMAGES ARE MADE TO METRO'S FACILITIES.
8. THE CONTRACTOR SHALL "HAND EXCAVATE" IN THE VICINITY OF COMMUNICATION AND POWER LINES FEEDING THE METRO SYSTEM.
9. AUGER BORE PITS SHALL BE LOCATED AT A MINIMUM DISTANCE OF THIRTY-FIVE FEET (35') FROM CENTERLINE OF TRACKS.
10. THE CONTRACTOR SHALL CONTACT METRO BUS OPERATIONS A MINIMUM OF TEN (10) WORKING DAYS PRIOR TO CONSTRUCTION CHANGES. THE CONTACT INFORMATION IS JULIO RIVERA, JR122@RIDEMETRO.ORG, 713-615-7219.
11. THE CONTRACTOR SHALL PROVIDE ANY TEMPORARY BUS STOP FACILITIES NEEDED, EXCEPT FOR BUS STOP SIGNS, AT NO COST TO METRO AND SHALL RESTORE ANY AFFECTED BUS STOP TO ITS ORIGINAL CONDITION AND MEET CURRENT AMERICAN DISABILITY ACT (ADA) REQUIREMENTS AS REQUIRED BY LOCAL, STATE, AND FEDERAL CODE AND REQUIREMENTS. NO BUS STOP SHALL BE PERMANENTLY REMOVED WITHOUT APPROVAL FROM METRO.
12. THE CONTRACTOR SHALL CONTACT THE DIRECTOR OF UNIVERSAL ACCESSIBILITY, TIM MILLS BY EMAIL AT TM140@RIDEMETRO.ORG OR BY PHONE 713-739-6861 ONE WEEK PRIOR TO CONSTRUCTION. METRO MAY ASSIGN AN INSPECTOR TO ASSURE NO DAMAGES ARE MADE TO METRO'S FACILITIES. UNIVERSAL ACCESSIBILITY WILL COORDINATE ANY PERMANENT OR TEMPORARY IMPACT ON BUS STOPS, SHELTERS, AND SIDEWALK TO MAINTAIN ACCESSIBILITY.

HCED GENERAL NOTES

1. PRIOR TO CONSTRUCTION THE CONTRACTOR SHALL SECURE "TRACK ALLOCATION PERMITS" ISSUED BY METRO RAIL OPERATIONS. CONTACT EDDIE ESPINOSA (EDDIE.ESPINOSA@RIDEMETRO.ORG, 832-392-0758) FOR TRACK ALLOCATION REQUESTS AND TRACK ACCESS PROCEDURES.
2. THE CONTRACTOR SHALL FIELD VERIFY EXISTING CONDITIONS BEFORE BEGINNING CONSTRUCTION.
3. THE CONTRACTOR IS RESPONSIBLE FOR PROVIDING SECURITY TO PROTECT THE PROJECT SITE, CONTRACTOR PROPERTY, EQUIPMENT, AND WORK.
4. THE CONTRACTOR IS RESPONSIBLE FOR CLEANING STREETS OF CONSTRUCTION DIRT AND DEBRIS AT CLOSE OF EACH WORK DAY.
5. THE CONDITION OF THE ROAD AND/OR RIGHT-OF-WAY, UPON COMPLETION OF THE JOB SHALL BE AS GOOD AS OR BETTER THAN PRIOR TO STARTING WORK.
6. PRIOR TO CONSTRUCTION, THE CONTRACTOR, ALONG WITH CONCURRENCE FROM THE FIELD ENGINEER, SHALL DETERMINE HIS/HER LAY-DOWN AND/OR STAGING AREA LOCATIONS.
7. THE CONTRACTOR SHALL NOTIFY ALL PROPERTY OWNERS A MINIMUM OF 24 HOURS PRIOR TO BLOCKING DRIVEWAYS OR ENTERING UTILITY EASEMENTS.
8. TRAFFIC INGRESS AND EGRESS FOR DRIVEWAYS AND PEDESTRIAN ACCESS FACILITIES SHALL BE MAINTAINED THROUGHOUT CONSTRUCTION.
9. THE CONTRACTOR SHALL REMOVE ANY FENCES, POSTS, MAILBOXES, PLANTERS, PERMANENT TRASH CONTAINERS, CULVERTS, ETC. OR SECTIONS THEREOF, THAT ENCROACH WITHIN THE COUNTY'S RIGHT-OF-WAY. NOTE: PRIOR TO CONSTRUCTION, THE PROPERTY OWNER WAS PAID TO RELOCATE OR REPLACE THESE ITEMS OUTSIDE OF THE COUNTY'S RIGHT-OF-WAY. IF THE OWNER HAS FAILED TO DO SO, THE CONTRACTOR WILL REPLACE THEM WITH THE MINIMUM LEVEL OF QUALITY NEEDED TO SECURE THE PROPERTY AND/OR MAINTAIN MAIL DELIVERY. IN THAT CASE, PAYMENT FOR THESE INSTALLATIONS WILL BE INCLUDED AS EXTRA WORK ITEMS OR AS OVERRUNS TO EXISTING PAY ITEMS.
10. ANY DAMAGE CAUSED BY THE CONTRACTOR TO SUCH ITEMS LOCATED OUTSIDE OF THE COUNTY'S RIGHT-OF-WAY, SHALL BE REPLACED WITH LIKE-KIND OR BETTER AT THE CONTRACTOR'S EXPENSE.
11. ALSO, IF THESE ITEMS ARE LOCATED WITHIN THE PROJECT RIGHT-OF-WAY AND ARE DESIGNATED TO REMAIN, ANY DAMAGE CAUSED BY THE CONTRACTOR TO SUCH ITEMS, SHALL BE REPLACED WITH LIKE-KIND OR BETTER AT THE CONTRACTOR'S EXPENSE.
12. TREES, BUSHES, SHRUBBERY AND OTHER DAMAGED PLANTINGS DESIGNATED TO REMAIN SHALL BE REPLACED WITHIN 72 HOURS OF REMOVAL AND ARE TO BE THOROUGHLY WATERED-IN. NO SEPARATE PAY.
13. PAVED SURFACES, PAVEMENT MARKERS AND MARKINGS SHALL BE PROTECTED FROM DAMAGE BY TRACKED EQUIPMENT.
14. IRON RODS DISTURBED DURING CONSTRUCTION ARE TO BE REPLACED BY A REGISTERED PROFESSIONAL LAND SURVEYOR FOR THE ORIGINAL PROPERTY OWNER AT NO SEPARATE PAY.
15. CONSTRUCTION STAKING WILL BE PROVIDED BY THE CONTRACTOR. TWO COPIES OF STAKING NOTES TO BE PROVIDED TO THE ENGINEER PRIOR TO CONSTRUCTION.
16. THE COUNTY OR THE COUNTY'S SURVEYOR SHALL PROVIDE A BENCHMARK OR TEMPORARY BENCHMARK AND SURVEY CONTROLS.
17. THE CONTRACTOR SHALL MAINTAIN UPDATED RED-LINED RECORD DRAWINGS ON SITE FOR INSPECTION BY THE ENGINEER.
18. MOWING, MAINTENANCE, AND CLEAN-UP OF THE PROJECT SHALL MEET THE REQUIREMENT OF STANDARD SPECIFICATION ITEM 560 (NO SEPARATE PAY). MOWING, MAINTENANCE, AND CLEAN-UP IS REQUIRED FOR THE PROJECT LIMITS AND DURATION, REGARDLESS OF THE CONTRACTOR'S SCOPE OF ACTIVITIES WITHIN THE PROJECT LIMITS.
19. THE REMOVAL OF ANY ABANDONED UTILITIES REQUIRED TO COMPLETE THE WORK SHALL BE INCIDENTAL AND NO SEPARATE PAYMENT SHALL BE MADE.
20. IT IS THE CONTRACTOR'S RESPONSIBILITY TO STOCKPILE NECESSARY MATERIAL ON-SITE OR AT A SECURED OFF-SITE LOCATION AT NO ADDITIONAL EXPENSE TO HARRIS COUNTY. ANY SUITABLE EXCAVATED MATERIAL ON THE PROJECT WHICH IS AVAILABLE AT THE TIME OF NEED; WHETHER FROM STORM SEWER, ROADWAY, AND/OR CHANNEL EXCAVATION, SHALL BE USED BEFORE BORROW IS BROUGHT ON-SITE.
21. MANHOLES, JUNCTION BOXES, INLETS, AND RISERS ARE TO BE PRECAST OR CAST-IN-PLACE.

A TETRA TECH COMPANY
Texas PE Firm Reg. #F-929
575 N. Dairy Ashford, Suite 700,
Houston, Texas 77079
T +1 281 589 7257
E usinfrastructure@rpsgroup.com

SURVEYED BY: KUO Inc.
FB NO. F-4578

This document is released for the purposes of interim review only under the authority of:

Jeremy Austin, P.E.
Texas P.E. No. 116816
03/30/2026

It is not to be used for bidding, construction, or permitting purposes.

CITY OF HOUSTON
HOUSTON PUBLIC WORKS

RECONSTRUCTION & REHABILITATION
COH LIFT STATIONS

GENERAL NOTES (SHEET 2 OF 2)
G-7

WBS NUMBER	FOR CITY OF HOUSTON USE ONLY
R-000267-0178-3	
DRAWING SCALE	
AS NOTED	
CITY OF HOUSTON PM	
TAHA LOTIA	
SHEET NO. 7 OF 268	

PLOTTED: 3/30/2026 4:30 PM
PLOT STYLE: Coh_ctb_230809.ctb
FILE NAME: 6 GENERAL NOTES (SHEET 1 OF 2).dwg

MECHANICAL LEGEND

- 20x12 SA — DUCT SIZE & SYSTEM ABBREVIATION FIRST FIGURE IS DIMENSION SHOWN ON PLAN
- DUCT SECTION, POSITIVE PRESSURE
- DUCT SECTION, NEGATIVE PRESSURE
- NEW DUCTWORK
- FLEXIBLE DUCTWORK
- DUCT TRANSITION
- RECT. TO ROUND TRANSITION
- BRANCH DUCTWORK
- TURNING VANES
- CEILING DIFFUSER - SUPPLY
- CEILING DIFFUSER - RETURN
- CEILING DIFFUSER - EXHAUST
- CEILING DIFFUSER - ROUND
- LINEAR SLOT DIFFUSER (DOUBLE SLOT)
- LOUVER AND SCREEN
- FIRE DAMPER, PROVIDE ACCESS DOOR
- VOLUME DAMPER
- BD — BACKDRAFT DAMPER
- SUPPLY/INTAKE AIRFLOW DIRECTION
- EXHAUST AIRFLOW DIRECTION
- GRILLE OR REGISTER, SIDEWALL
- PIPE CAP
- PIPE CONNECTION, BOTTOM
- PIPE CONNECTION, TOP
- PIPE ELBOW, TURNED UP
- PIPE ELBOW, TURNED DOWN
- PIPE TEE
- ANCHOR, INTERMEDIATE
- BUTTERFLY VALVE
- GATE VALVE
- BALL VALVE
- CHECK VALVE
- STRAINER VALVE
- THREE-WAY CONTROL VALVE
- TWO-WAY CONTROL VALVE
- PRESSURE GAUGE
- ·U· — DOOR UNDERCUT
- Ø — DIAMETER

- MANUAL AIR VENT
- AUTOMATIC AIR VENT
- PUMP (SCHEMATIC)
- (T) — THERMOSTAT
- CO_2 — CARBON DIOXIDE SENSOR
- CO — CARBON MONOXIDE SENSOR
- (M) — MOTORIZED DAMPER
- (A) — PNEUMATIC DAMPER
- (S) — EMERGENCY SHUTDOWN SWITCH
- DP — DIFFERENTIAL PRESSURE SENSOR
- SD — DUCT SMOKE DETECTOR
- (M) — MASTER EMERGENCY SHUTDOWN SWITCH
- (H) — HUMIDISTAT
- HVAC - # — EQUIPMENT TAG
- BOD: 4' - 7" — BOTTOM OF DUCT ELEVATION TAG
- POINT OF DISCONNECTION
- POINT OF CONNECTION
- (#) — KEYED NOTE
- CD-A W X H ### — AIR TERMINAL AND AIRFLOW TAG
  - AIR QUANTITY DELIVERED BY DEVICE IN CFM
  - AIR TERMINAL NECK SIZE (IN.)
  - AIR TERMINAL MARK AS INDICATED IN SCHEDULE
- OR
- SAD-# ### CFM — AIR TERMINAL MARK AS INDICATED IN SCHEDULE; AIR QUANTITY DELIVERED BY DEVICE
- AREA OUT OF SCOPE
- AREA OF DEMOLITION

NOTES:

1. THIS LEGEND IS FOR REFERENCE ONLY.
2. ALL SYMBOLS WITHIN THIS LEGEND MAY NOT APPLY TO THIS PROJECT.

MECHANICAL ABBREVIATIONS

(D)	DEMOLITION
(E)	EXISTING
(R)	RELOCATED
AAV	AUTOMATIC AIR VENT
ABS	ABSOLUTE
AD	ACCESS DOOR
ADJ	ADJUSTABLE
AFF	ABOVE FINISHED FLOOR
AFG	ABOVE FINISHED GRADE
AHU	AIR HANDLING UNIT
AP	ACCESS PANEL
APD	AIR PRESSURE DROP
APPROX	APPROXIMATE
BFF	BELOW FINISHED FLOOR
BHP	BRAKE HORSEPOWER
CAP	CAPACITY
CHWR	CHILLED WATER RETURN
CHWS	CHILLED WATER SUPPLY
CONC	CONCRETE
COND	CONDENSATE
CONN	CONNECTION
CONT	CONTINUATION
CP-1	CONTROL PANEL WITH DESIGNATION
CU	CONDENSING UNIT
CW	CHILLED WATER
DB	DRY BULB
DEG	DEGREES
DEMO	DEMOLITION
DIA	DIAMETER
DN	DOWN
DWG	DRAWING
EA	EXHAUST AIR
EAG	EXHAUST AIR GRILLE
EAT	ENTERING AIR TEMPERATURE
EF	EXHAUST FAN
EMCS	EMERGENCY MANAGEMENT AND CONTROL SYSTEM
ENT	ENTERING
ERV	ENERGY RECOVERY VENTILATOR
ESP	EXTERNAL STATIC PRESSURE
ET	EXPANSION TANK
EUH	ELECTRIC UNIT HEATER
EWT	ENETERING WATER TEMPERATURE
EXH	EXHAUST
F	FAHRENHEIT
FCU	FAN COIL UNIT
FD	FIRE DAMPER
FH	FIRE HYDRANT
FLEX	FLEXIBLE
FM	FLOW METER
FPM	FEET PER MINUTE
GAL	GALLONS
GH	GRAVITY HOOD
GM	GAS METER
GPM	GALLONS PER MINUTE
GUH	GAS UNIT HEATER
HP	HORSEPOWER
HWR	HOT WATER RETURN
HWS	HOT WATER SUPPLY
ID	INSIDE DIAMETER/DIMENSION
IE	INVERT ELEVATION
IN	INCH
L	LOUVER
LAT	LEAVING AIR TEMPERATURE
LP	LOUVERED PENTHOUSE
LVL	LEVEL
LWT	LEAVING WATER TEMPERATURE
M	METER
MAX	MAXIMUM
MEZZ	MEZZANINE
MFR	MANUFACTURER
MIN	MINIMUM
MISC	MISCELLANEOUS
N/A	NOT APPLICABLE
NG	NATURAL GAS
NTS	NOT TO SCALE
OA	OUTDOOR AIR
OD	OUTSIDE DIAMETER
OED	OPEN ENDED DUCT
PD	PRESSURE DROP
PSI	POUNDS PER SQUARE INCH
R	RADIUS
RA	RETURN AIR
RAG	RETURN AIR GRILLE
REFRIG	REFRIGERANT
RH	RADIANT HEATER
RL	REFRIGERANT LIQUID LINE
RPM	REVOLUTIONS PER MINUTE
RS	REFRIGERANT SUCTION LINE
SA	SUPPLY AIR
SAG	SUPPLY AIR GRILLE
SB	SECURITY BARS
SF	SUPPLY FAN
SPEC	SPECIFICATION
STD	STANDARD
T	THERMOMETER
TA	TRANSFER AIR
TBD	TO BE DETERMINED
TEMP	TEMPERATURE
TSP	TOTAL STATIC PRESSURE
TSTAT	THERMOSTAT
TYP	TYPICAL
UH	UNIT HEATER
V	VENT
VAV	VARIABLE AIR VOLUME
VFD	VARIABLE FREQUENCY DRIVE
VIF	VERIFY IN FIELD
VRF	VARIABLE REFRIGERANT FLOW
W	WATT
WB	WET BULB
WMS	WIRE MESH SCREEN
WS	WASTE STACK

APPLICABLE CODES AND STANDARDS

HOUSTON BUILDING CODE	HBC 2021 (IBC 2021)
HOUSTON BUILDING CODE, EXISTING BLDG	HEBC 2021 (IEBC 2021)
HOUSTON PLUMBING CODE	HPC 2021 (UPC 2021)
TEXAS IHB FUEL GAS CODE	TFGC 2021 (IFGC 2021)
HOUSTON ELECTRICAL CODE	HEC 2023 (NFPA 70 2023)
OCCUPATIONAL SAFETY AND HEALTH ACT	OSHA
COH DPW&E ENGINEERING DESIGN MANUAL FOR SUBMERSIBLE LIFT STATIONS	COH DPW&E 2016

NOTE: ALL APPLICABLE BUILDING CODES AND STANDARDS NOT SPECIFIED HEREIN.

MECHANICAL GENERAL NOTES

GENERAL NOTES

1. THESE GENERAL NOTES APPLY TO ALL SHEETS. REFER TO INDIVIDUAL SHEETS FOR SHEET SPECIFIC NOTES.
2. CONTRACT DOCUMENT DRAWINGS ARE DIAGRAMMATIC AND ARE INTENDED TO CONVEY SCOPE AND GENERAL ARRANGEMENT ONLY. DO NOT SCALE FOR MATERIAL QUANTITIES. ALL SCALING SHOULD BE REFERENCED TO ARCHITECTURAL PLANS ONLY.
3. COORDINATE CONSTRUCTION OF ALL MECHANICAL WORK WITH ALL OTHER DISCIPLINES AND AS SHOWN ON OTHER CONTRACT DRAWINGS.
4. CONTRACTOR SHALL VISIT SITE AND VERIFY ALL EXISTING CONDITIONS AND CONNECTIONS TO EXISTING WORK PRIOR TO BIDDING AND CONSTRUCTION.
5. COORDINATE CUTTING AND PATCHING WITH GENERAL CONTRACTOR AND OTHER DISCIPLINES. CONTRACTOR SHALL BE RESPONSIBLE FOR ALL CUTTING AND PATCHING RELATED TO THEIR WORK.
6. ALL ATTACHMENTS TO THE BUILDING STRUCTURE SHALL BE COORDINATED WITH THE STRUCTURAL DESIGN. ALL BRACING AND MOUNTING OF PIPES AND DUCTS SHALL MEET THE MINIMUM REQUIREMENTS OF THE MOST RECENT SMACNA HVAC DUCT CONSTRUCTION STANDARDS-METAL AND FLEXIBLE. CONTRACTOR SHALL MAINTAIN ONE COPY OF THIS MANUAL ON SITE AT ALL TIMES.
7. FOR SEISMIC ZONES REFER TO STRUCTURAL DESIGN FOR SEISMIC ATTACHMENT REQUIREMENTS PER THE BUILDING CODE. ALL SEISMIC RESTRAINTS OF PIPES AND DUCTS SHALL MEET THE MINIMUM REQUIREMENTS OF THE MOST RECENT SMACNA SEISMIC RESTRAINT MANUAL. CONTRACTOR SHALL MAINTAIN ONE COPY ON SITE AT ALL TIMES.
8. PROVIDE FLASHING AND COUNTERFLASHING FOR ALL PENETRATIONS THROUGH WALLS OR ROOF TO MAKE WATERPROOF INSTALLATION.
9. ALL MISCELLANEOUS STEEL REQUIRED TO ENSURE PROPER INSTALLATION AND AS SHOWN IN THE DETAILS FOR PIPING, DUCTWORK, AND EQUIPMENT (UNLESS OTHERWISE NOTED) SHALL BE FURNISHED AND INSTALLED BY THE MECHANICAL CONTRACTOR.
10. AT COMPLETION OF CONSTRUCTION, CONTRACTOR SHALL PROVIDE COPIES OF BOUND OPERATIONS AND MAINTENANCE MANUALS.

ANCHORAGE NOTES

1. ALL MECHANICAL EQUIPMENT SHALL BE ANCHORED OR BRACED TO MEET THE HORIZONTAL AND VERTICAL FORCES PRESCRIBED IN CHAPTER 13 OF ASCE 7-16, IBC 2108 SECTION 1613, AND AS MODIFIED BY CHAPTER 2 OF UFC 3-301-01.
2. THE ATTACHMENT OF THE FOLLOWING ITEMS SHALL RESIST THE ASSIGNED FORCES BUT NEED NOT BE DETAILED ON THE PLANS. THE INSPECTOR SHALL VERIFY THAT THESE EQUIPMENT AND DISTRIBUTION SYSTEMS HAVE BEEN ANCHORED.
   - TEMPORARY OR MOVABLE EQUIPMENT WITH FLEXIBLE CONNECTION TO POWER OR UTILITIES.
   - EQUIPMENT WEIGHING 20 LB OR LESS OR IN CASE OF DISTRIBUTED SYSTEM 5 LB/FT OR LESS.
3. INSTALLATION OF THE COMPONENTS NOT SPECIFICALLY DETAILED ON THE PLANS SHALL BE SUBJECT TO THE APPROVAL OF THE OWNER'S REPRESENTATIVE AND/OR STRUCTURAL ENGINEER.
4. PROVIDE CALCULATIONS AND DETAILS FOR THE SUPPORTS, ATTACHMENTS, AND BRACING OF ALL PIPES, DUCTS, AND CONDUITS.
5. A LICENSED PROFESSIONAL ENGINEER SHALL VERIFY THE ADEQUACY OF STRUCTURE FOR SUPPORT AND ANCHORAGE OF THE EQUIPMENT.

NO	DATE	REVISION	APP.

RPS — A TETRA TECH COMPANY
Texas PE Firm Reg. #F-929
575 N. Dairy Ashford, Suite 700, Houston, Texas 77079
T +1 281 589 7257
E usinfrastructure@rpsgroup.com

SURVEYED BY: KUO INC.
FB NO. F-4578

This document is released for the purposes of interim review only under the authority of:

Luke Ramirez, P.E.
Texas P.E. No. 128371
2/16/26

It is not to be used for bidding, construction, or permitting purposes.

CITY OF HOUSTON

HOUSTON PUBLIC WORKS

RECONSTRUCTION & REHABILITATION
COH LIFT STATIONS

ABBREVIATIONS, LEGENDS, & NOTES

M-1

WBS NUMBER	FOR CITY OF HOUSTON USE ONLY
R-000267-0178-3	
DRAWING SCALE	
AS NOTED	
CITY OF HOUSTON PM	
TAHA LOTIA	
SHEET NO. 8 OF 268	

PLOTTED: 3/27/2026 9:39:18 AM
PLOT STYLE:
Autodesk Docs://200-317106-24001 COH LS Rehab Design/M-LIFT STATIONS-200-317106-24001_v25.rvt

PLUMBING LEGEND

- SANITARY SEWER PIPING
- COLD WATER PIPING
- HOT WATER PIPING
- HOT WATER RECIRCULATION PIPING
- VENT PIPING
- STORM PIPING
- HIDDEN / UNDERGROUND PIPING

- VENT THROUGH ROOF
- CLEAN OUT, EXPOSED
- CLEAN OUT
- DOUBLE YARD CLEANOUT
- FLOOR DRAIN
- TPL — TRAP PRIMER LINE
- HB — HOSE BIBB W/INTEGRAL VACUUM BREAKER (INTERIOR SURFACE)
- WH — WALL HYDRANT W/INTEGRAL VACUUM BREAKER (EXTERIOR SURFACE)
- PIPE CAP
- PIPE CONNECTION, BOTTOM
- PIPE CONNECTION, TOP
- PIPE ELBOW, TURNED UP
- PIPE ELBOW, TURNED DOWN
- PIPE TEE
- ANCHOR, INTERMEDIATE
- BUTTERFLY VALVE
- GATE VALVE
- BALL VALVE
- CHECK VALVE
- STRAINER VALVE
- STRAINER (BLOW-OFF)
- GAS COCK/GAS STOP
- THERMOMETER
- BALANCING VALVE
- THERMOSTATIC MIXING VALVE
- SOLENOID VALVE
- PRESSURE REGULATOR
- RELIEF VALVE
- WATER HAMMER ARRESTER/SHOCK ABSORBER
- UNION
- PUMP (SCHEMATIC)
- W — WATER METER
- BFP — BACK FLOW PREVENTER
- M — GAS METER
- Ø — DIAMETER

- SK - # — FIXTURE TAG
- LIMIT OF DEMOLITION
- CONNECT TO EXISTING
- KEYED NOTE
- 3/4"ø HW — PIPE SIZE AND SYSTEM TAG
- AREA OUT OF SCOPE
- AREA OF DEMOLITION

NOTES:

1. THIS LEGEND IS FOR REFERENCE ONLY.
2. ALL SYMBOLS WITHIN THIS LEGEND MAY NOT APPLY TO THIS PROJECT.

PLUMBING ABBREVIATIONS

(D)	DEMOLITION
(E)	EXISTING
(R)	RELOCATED
AFF	ABOVE FINISHED FLOOR
AFG	ABOVE FINISHED GRADE
APPROX	APPROXIMATE
BFF	BELOW FINISHED FLOOR
BFP	BACKFLOW PREVENTER
CA	COMPRESSED AIR
CAP	CAPACITY
CO	CLEAN OUT
COND	CONDENSATE
CONN	CONNECTION
CONT	CONTINUATION
D	DRAIN
DCW	DOMESTIC COLD WATER
DEG	DEGREES
DEMO	DEMOLITION
DIA	DIAMETER
DN	DOWN
DS	DOWNSPOUT
DWG	DRAWING
EA	EACH
EEW	EMERGENCY EYE/FACE WASH
ENT	ENTERING
ESS	EMERGENCY SAFETY SHOWER
ET	EXPANSION TANK
F	FAHRENHEIT
FCO	FLOOR CLEAN OUT
FD	FLOOR DRAIN
FH	FIRE HYDRANT
FM	FLOW METER
FPH	FREEZE PROOF HYDRANT
FPM	FEET PER MINUTE
GAL	GALLONS
GD	GARBAGE DISPOSAL
GM	GAS METER
GPM	GALLONS PER MINUTE
GWH	GAS WATER HEATER
HB	HOSE BIBB
HD	HEAD
HO	HUB OUTLET
HP	HORSEPOWER
HW	HOT WATER
HWR	HOT WATER RETURN
ID	INSIDE DIAMETER/DIMENSION
IE	INVERT ELEVATION
IMVB	ICE MAKER VALVE BOX
IN	INCH
IW	INDUSTRIAL WASTE
IWH	INSTANTANEOUS WATER HEATER
LAV	LAVATORY
M	METER
MAX	MAXIMUM
MEZZ	MEZZANINE
MFR	MANUFACTURER
MIN	MINIMUM
MISC	MISCELLANEOUS
N/A	NOT APPLICABLE
NG	NATURAL GAS
NPW	NON-POTABLE WATER
NTS	NOT TO SCALE
OD	OUTSIDE DIAMETER
PCV	PRESSURE CONTROL VALVE
PD	PRESSURE DROP
PG	PRESSURE GAUGE
PRV	PRESSURE REDUCING VALVE
PSI	POUNDS PER SQUARE INCH
PVC	POLYVINYL CHLORIDE
PW	POTABLE WATER
R	RADIUS
RD	ROOF DRAIN
RP	RECIRCULATION PUMP
RPBP	REDUCED PRESSURE BACKFLOW PREVENTER
RPM	REVOLUTIONS PER MINUTE
SAN	SANITARY SEWER PIPING
SK	SINK
SP	SUMP PUMP
SPEC	SPECIFICATION
STD	STANDARD
STO	STORM
SW	SERVICE WATER
TBD	TO BE DETERMINED
TCV	TEMPERING VALVE
TD	TRENCH DRAIN
TEMP	TEMPERATURE
TMV	THERMOSTATIC MIXING VALVE
TP	TRAP PRIMER
TW	TEPID WATER
TYP	TYPICAL
UR	URINAL
V	VENT
VIF	VERIFY IN FIELD
VS	VENT STACK
VTR	VENT THRU ROOF
WB	WASHER BOX
WC	WATER CLOSET
WCO	WALL CLEAN OUT
WG	WATER GAUGE
WPD	WATER PRESSURE DROP
YH	YARD HYDRANT

PLUMBING GENERAL NOTES

APPLICABLE CODES AND STANDARDS	
HOUSTON BUILDING CODE	HBC 2021 (IBC 2021)
HOUSTON BUILDING CODE, EXISTING BLDG	HEBC 2021 (IEBC 2021)
HOUSTON PLUMBING CODE	HPC 2021 (UPC 2021)
TEXAS IHB FUEL GAS CODE	TFGC 2021 (IFGC 2021)
HOUSTON ELECTRICAL CODE	HEC 2023 (NFPA 70 2023)
OCCUPATIONAL SAFETY AND HEALTH ACT	OSHA
COH DPW&E ENGINEERING DESIGN MANUAL FOR SUBMERSIBLE LIFT STATIONS	COH DPW&E 2016

NOTE: ALL APPLICABLE BUILDING CODES AND STANDARDS NOT SPECIFIED HEREIN.

GENERAL NOTES

1. THESE GENERAL NOTES APPLY TO ALL SHEETS. REFER TO INDIVIDUAL SHEETS FOR SHEET NOTES.
2. CONTRACT DOCUMENT DRAWINGS ARE DIAGRAMMATIC AND ARE INTENDED TO CONVEY SCOPE AND GENERAL ARRANGEMENT ONLY. DO NOT SCALE FOR MATERIAL QUANTITIES. ALL SCALING SHOULD BE REFERENCED TO ARCHITECTURAL PLANS ONLY.
3. ALL EQUIPMENT AND PIPING SHALL BE INSTALLED IN COMPLIANCE WITH THE CODES LISTED IN THE TABLE ABOVE.
4. ALL INTERIOR FLOOR DRAINS AND OPEN RECEPTACLES WITH TRAPS SHALL BE PROTECTED BY A TRAP PRIMER.
5. WATER LINES SHALL NOT BE ROUTED ABOVE ANY ELECTRICAL ROOMS, ELECTRICAL PANELS, OR TELEPHONE ROOMS.
6. CONTRACTOR IS RESPONSIBLE FOR COORDINATION WITH OTHER TRADES TO MINIMIZE SPATIAL CONFLICTS.
7. CONTRACTOR SHALL VERIFY ALL FIELD CONDITIONS AND DIMENSIONS BEFORE CONSTRUCTION BEGINS.
8. PROVIDE ISOLATION VALVES AT ALL PIPE CONNECTIONS TO EQUIPMENT.
9. COORDINATE NEW WATER METER LOCATION WITH LOCAL UTILITY AUTHORITY.

NATURAL GAS PIPING NOTES

1. ALL GAS PIPING SHALL BE PAINTED AND LABELED IN ACCORDANCE WITH APPLICABLE CODES AND SPECIFICATIONS.
2. COORDINATE NEW METER LOCATION FOR BUILDING WITH LOCAL UTILITIES.
3. ALL GAS PIPING SHALL BE LABELED AT BEGINNING, ALL ENDS, AND AT 6' INTERVALS DESIGNATING GAS & PRESSURE. LABELS SHALL BE PER SPECIFICATIONS.

NO	DATE	REVISION	APP.

A TETRA TECH COMPANY
Texas PE Firm Reg. #F-929
575 N. Dairy Ashford, Suite 700,
Houston, Texas 77079
T +1 281 589 7257
E usinfrastructure@rpsgroup.com

SURVEYED BY: KUO INC.
FB NO. F-4578

This document is released for the purposes of interim review only under the authority of:

Luke Ramirez, P.E.
Texas P.E. No. 128371
2/16/26

It is not to be used for bidding, construction, or permitting purposes.

CITY OF HOUSTON
HOUSTON PUBLIC WORKS

RECONSTRUCTION & REHABILITATION
COH LIFT STATIONS

ABBREVIATIONS, LEGENDS, & NOTES

P-1

WBS NUMBER	FOR CITY OF HOUSTON USE ONLY
R-000267-0178-3	
DRAWING SCALE	
AS NOTED	
CITY OF HOUSTON PM	
TAHA LOTIA	
SHEET NO. 9 OF 268	

PLOTTED: 3/27/2026 9:39:39 AM
PLOT STYLE:
Autodesk Docs://200-317106-24001 COH LS Rehab Design/M-LIFT STATIONS-200-317106-24001_v25.rvt

PLUMBING FIXTURE SCHEDULE

MARK	DESCRIPTION	CONNECTION SIZE (IN)				MANUFACTURER	MODEL	NOTES
		CW	HW	WASTE	VENT			
YH-1	FREEZE-PROOF YARD HYDRANT	3/4"	-	-	-	ZURN	Z1395XL	-

BACKFLOW PREVENTER SCHEDULE

MARK	DESCRIPTION	LOCATION	SIZE (IN)	FLOW (GPM)	MAXIMUM OPERATING PRESSURE (PSIG)	MAXIMUM INLET TEMPERATURE (°F)	PRESSURE LOSS AT RATED FLOW (PSIG)	MANUFACTURER	MODEL	NOTES
BFP-2	REDUCED PRESSURE ZONE BACKFLOW PREVENTER	SHADY MAPLE	3/4"	10	175	180	13.0	WATTS	LF009-QT-S	1
BFP-3	REDUCED PRESSURE ZONE BACKFLOW PREVENTER	M.C.M.U.D. #58	3"	175	175	110	12.0	WATTS	LF009-OSY	2
BFP-4	REDUCED PRESSURE ZONE BACKFLOW PREVENTER	WILL CLAYTON	3/4"	15	175	180	13.0	WATTS	LF009-QT-S	1
BFP-5	REDUCED PRESSURE ZONE BACKFLOW PREVENTER	BROOKDALE	3/4"	10	175	180	13.0	WATTS	LF009-QT-S	1

NOTES:
1. PROVIDE WITH BALL VALVES FOR SHUT OFF, STRAINER, INSULATED VANDAL-PROOF ENCLOSURE (HOT BOX TYPE OR APPROVED EQUAL)
2. PROVIDE WITH GATE VALVES FOR SHUT OFF, STRAINER, INSULATED VANDAL-PROOF ENCLOSURE (HOT BOX TYPE OR APPROVED EQUAL)

NO.	DATE	REVISION	APP.

A TETRA TECH COMPANY
Texas PE Firm Reg. #F-929
575 N. Dairy Ashford, Suite 700,
Houston, Texas 77079
T +1 281 589 7257
E usinfrastructure@rpsgroup.com

SURVEYED BY: KUO INC.
FB NO. F-4578

This document is released for the purposes of interim review only under the authority of:

Luke Ramirez, P.E.
Texas P.E. No. 128371
2/16/26

It is not to be used for bidding, construction, or permitting purposes.

CITY OF HOUSTON
HOUSTON PUBLIC WORKS

RECONSTRUCTION & REHABILITATION
COH LIFT STATIONS

PLUMBING SCHEDULES

P-2

WBS NUMBER	FOR CITY OF HOUSTON USE ONLY
R-000267-0178-3	
DRAWING SCALE	
AS NOTED	
CITY OF HOUSTON PM	
TAHA LOTIA	
SHEET NO. 10 OF 268	

PLOTTED: 3/27/2026 9:39:54 AM
PLOT STYLE:
Autodesk Docs://200-317106-24001 COH LS Rehab Design/M-LIFT STATIONS-200-317106-24001_v25.rvt

PLOTTED: 3/30/2026 4:31 PM
PLOT STYLE: Coh_ctb_230809.ctb
FILE NAME: WASTEWATER DETAILS (SHEET 2 OF 7).dwg

NO.	DATE	REVISION	APP.
	MM/DD/YY	BRIEF DESCRIPTION	XXX
	MM/DD/YY	BRIEF DESCRIPTION	XXX
	MM/DD/YY	BRIEF DESCRIPTION	XXX

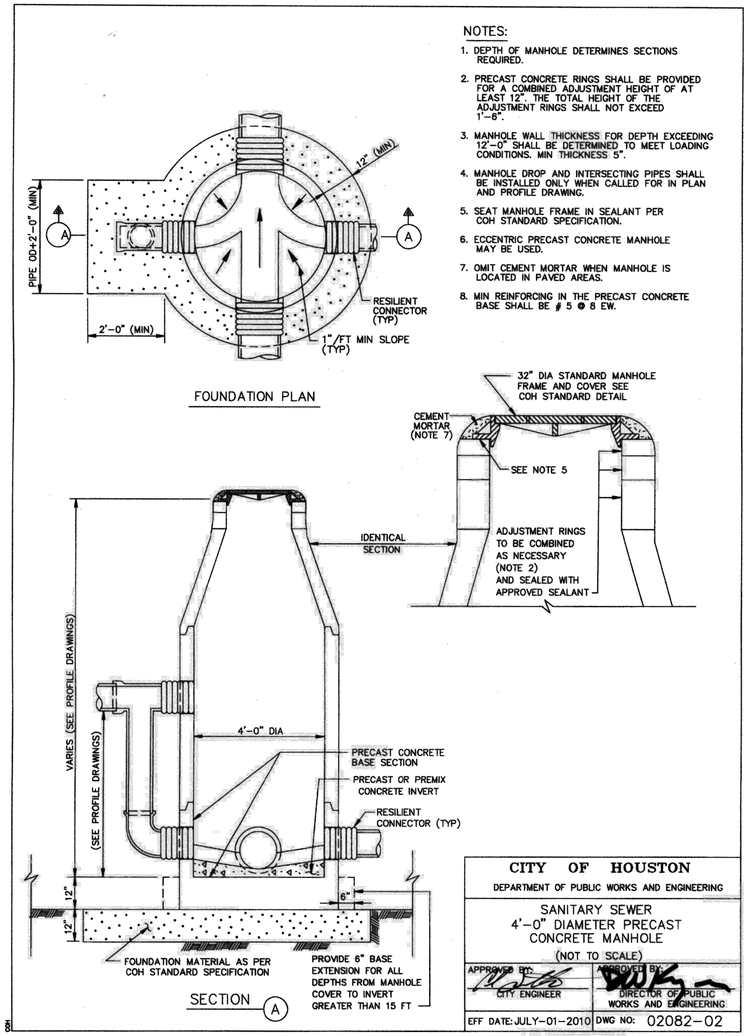

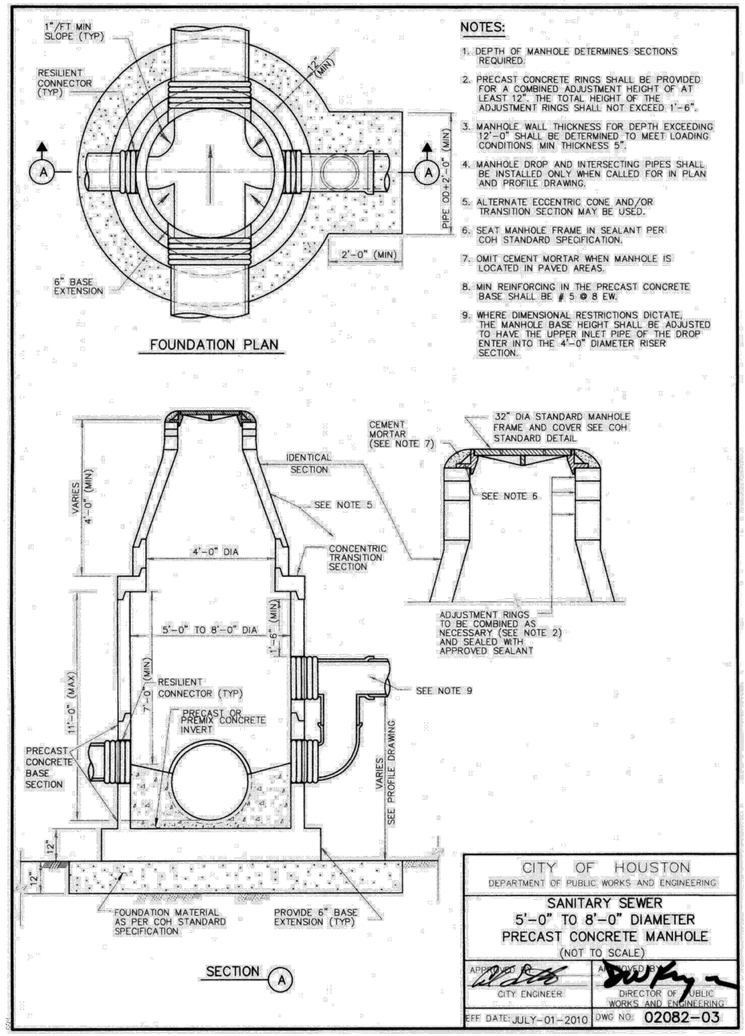

RPS
A TETRA TECH COMPANY
Texas PE Firm Reg. #F-929
575 N. Dairy Ashford, Suite 700,
Houston, Texas 77079
T +1 281 589 7257
E usinfrastructure@rpsgroup.com

SURVEYED BY: KUO Inc.
FB NO. F-4578

This document is released for the purposes of interim review only under the authority of:

Jeremy Austin, P.E.
Texas P.E. No. 116816
03/30/2026

It is not to be used for bidding, construction, or permitting purposes.

CITY OF HOUSTON
HOUSTON PUBLIC WORKS

RECONSTRUCTION & REHABILITATION COH LIFT STATIONS

WASTEWATER DETAILS
(SHEET 1 OF 7)
STD-C-1

WBS NUMBER	FOR CITY OF HOUSTON USE ONLY
R-000267-0178-3	
DRAWING SCALE	
AS NOTED	
CITY OF HOUSTON PM	
TAHA LOTIA	
SHEET NO. 11 OF 268	

PLOTTED: 3/30/2026 4:31 PM
PLOT STYLE: Con_ctb_230809.ctb
FILE NAME: WASTEWATER DETAILS (SHEET 2 OF 7).dwg

NO.	DATE	REVISION	APP.
	MM/DD/YY	BRIEF DESCRIPTION	XXX
	MM/DD/YY	BRIEF DESCRIPTION	XXX
	MM/DD/YY	BRIEF DESCRIPTION	XXX

NOTES ON USE OF STANDARD DETAIL 02082-03

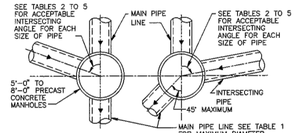

FOR MAIN PIPES FROM STRAIGHT THROUGH TO 45° DEFLECTION

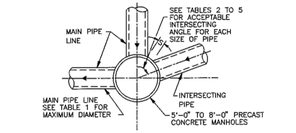

FOR MAIN PIPE WITH 45° TO 90° DEFLECTION

TABLE 1
MAXIMUM MAIN PIPE DIAMETER (I.D) IN INCHES

MANHOLE DIAMETER (FT)	STRAIGHT THROUGH TO 45° DEFLECTION	WITH 90° DEFLECTION	TABLE TO BE USED
5	36	27	2
6	42	33	3
7	48	36	4
8	60	42	5

TABLE 2
MINIMUM ANGLE AND INTERSECTING PIPE ID SIZES FOR 5'-0" DIA MANHOLE

INTERSECTING PIPE ID SIZES (INCHES)	MINIMUM INTERSECTING ANGLE IN DEGREES FOR VARIOUS MAIN PIPE ID SIZES IN INCHES									
	8"	10"	12"	15"	18"	21"	24"	27"	30"	33"	36"
8	49	50	54	58	61	66	69	73	77	82	86
10		53	57	61	64	68	71	76	79	84	88
12			61	65	68	72	75	80	83	88	–
15				68	71	75	79	83	87	–	–
18					75	79	82	87	90	–	–
21						83	86	90	–	–	–
24							90	–	–	–	–
27								–	–	–	–
30									–	–	–
33										–	–
36											–

TABLE 3
MINIMUM ANGLE AND INTERSECTING PIPE ID SIZES FOR 6'-0" DIA MANHOLE

INTERSECTING PIPE ID SIZES (INCHES)	MINIMUM INTERSECTING ANGLE IN DEGREES FOR VARIOUS MAIN PIPE ID SIZES IN INCHES										
	8"	10"	12"	15"	18"	21"	24"	27"	30"	33"	36"	42"
8	40	42	45	49	51	54	57	61	63	67	70	78
10		44	47	50	53	56	59	62	65	69	72	79
12			50	54	56	60	62	66	68	72	75	83
15				57	59	62	65	69	71	75	78	85
18					62	65	68	71	74	78	81	88
21						68	71	74	77	81	84	–
24							74	77	80	84	87	–
27								83	85	89	–	–
30									–	–	–	–
33										–	–	–
36											–	–
42												–

TABLE 4
MINIMUM ANGLE AND INTERSECTING PIPE ID SIZES FOR 7'-0" DIA MANHOLE

INTERSECTING PIPE ID SIZES (INCHES)	MINIMUM INTERSECTING ANGLE IN DEGREES FOR VARIOUS MAIN PIPE ID SIZES IN INCHES											
	8"	10"	12"	15"	18"	21"	24"	27"	30"	33"	36"	42"	48"
8	35	36	39	42	44	47	49	52	54	57	59	65	71
10		38	40	43	45	48	50	53	55	59	61	67	73
12			43	46	48	51	53	56	58	61	64	70	76
15				48	50	53	55	58	61	64	66	72	78
18					58	56	58	61	63	66	69	74	81
21						58	60	63	66	69	71	77	83
24							63	66	68	71	74	79	86
27								70	72	78	78	84	90
30									78	81	83	89	–
33										86	88	–	–
36											–	–	–
42												–	–
48													–

TABLE 5
MINIMUM ANGLE AND INTERSECTING PIPE ID SIZES FOR 8'-0" DIA MANHOLE

INTERSECTING PIPE ID SIZES (INCHES)	MINIMUM INTERSECTING ANGLE IN DEGREES FOR VARIOUS MAIN PIPE ID SIZES IN INCHES													
	8"	10"	12"	15"	18"	21"	24"	27"	30"	33"	36"	42"	48"	54"	60"
8	30	32	34	36	38	41	43	45	47	50	52	56	61	67	74
10		33	35	38	40	42	44	46	48	51	53	58	63	68	77
12			38	40	42	44	46	49	51	53	55	60	65	71	79
15				42	44	47	48	51	53	56	58	62	67	73	81
18					46	49	51	53	55	58	60	64	70	75	83
21						51	53	55	57	60	62	67	72	77	85
24							55	57	59	62	64	69	74	79	89
27								61	63	66	68	73	78	83	–
30									67	70	72	77	82	87	–
33										74	76	81	86	–	–
42											81	85	–	–	–
48												–	–	–	–
54													–	–	–
60														–	–

* NOT APPLICABLE
(INTERSECTING PIPE GREATER THAN MAIN PIPE)

NOTES TO SPECIFIER:

1. *"–" INDICATES THAT A SPECIAL DESIGN OR THE NEXT LARGER MANHOLE SIZE SHALL BE USED.*
2. *TABLES 2 TO 5 ARE BASED ON A MIN SEPARATION DISTANCE "S" OF 15.5" OR INTERSECTION PIPE OD/2, WHICHEVER IS GREATER, BETWEEN MAIN AND INTERSECTING PIPES ALONG THE MANHOLE INSIDE WALL ARC.*
3. *PIPE WALL THICKNESS USED IN TABLES 2 TO 5 ARE BASED ON RCP. THE DESIGN ENGINEER MAY CALCULATE TO SEE IF THINNER WALL PIPES CAN MEET THE SEPARATION CRITERIA FOR ANGLES SMALLER THAN THE TABLES ALLOW.*
4. *LIMITATIONS TO BASE HEIGHT ARE BASED ON RESISTING BUOYANT UPLIFT FORCES BASED ON WATER AT GROUND SURFACE AND A SAFETY FACTOR OF 1.20.*
5. *A SPECIAL DESIGN IS REQUIRED IF MANHOLE ID IS GREATER THAN 8 FT.*

CITY OF HOUSTON
DEPARTMENT OF PUBLIC WORKS AND ENGINEERING
ENGINEERING, CONSTRUCTION AND REAL ESTATE GROUP

SANITARY SEWER
5'-0" TO 8'-0" DIAMETER
PRECAST CONCRETE MANHOLE NOTES
(NOT TO SCALE)

APPROVED BY: CITY ENGINEER
APPROVED BY: DIRECTOR OF PUBLIC WORKS AND ENGINEERING
EFF DATE: OCT-01-2002 | DWG NO: 02082N-03

NOTES ON USE OF STANDARD DETAIL 02082-02

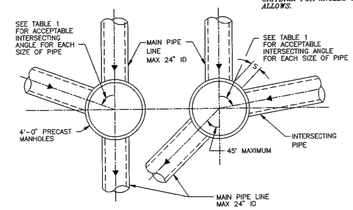

MAX 24" ID MAIN PIPE ALLOWED FOR STRAIGHT THROUGH TO 45° DEFLECTION

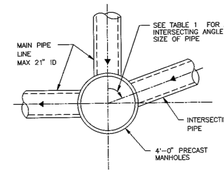

MAX 21" ID MAIN PIPE ALLOWED FOR 45° TO 90° DEFLECTION

TABLE 1
MIN ANGLE AND INTERSECTING PIPE SIZES FOR A 4'-0" DIA MANHOLE

INTERSECTING PIPE SIZE (INCHES)	MIN INTERSECTING ANGLE IN DEGREES FOR VARIOUS MAIN PIPE SIZES IN INCHES						
	6"	8"	10"	12"	15"	18"	21"	24"
6	55	58	60	65	70	75	80	85
8		60	63	68	73	77	82	87
10			66	71	75	80	85	90
12				76	80	85	90	–
15					85	90	–	–
18						–	–	–
21							–	–
24								–

NOT APPLICABLE
UNLESS HYDRAULICS DICTATE
(INTERSECTING PIPE > MAIN PIPE)

CITY OF HOUSTON
DEPARTMENT OF PUBLIC WORKS AND ENGINEERING
ENGINEERING, CONSTRUCTION AND REAL ESTATE DIVISION

SANITARY SEWER
4'-0" DIAMETER PRECAST
CONCRETE MANHOLE NOTES
(NOT TO SCALE)

APPROVED BY: CITY ENGINEER
APPROVED BY: DIRECTOR OF PUBLIC WORKS AND ENGINEERING
EFF DATE: OCT-01-2002 | DWG NO: 02082N-02

RPS
A TETRA TECH COMPANY
Texas PE Firm Reg. #F-929
575 N. Dairy Ashford, Suite 700,
Houston, Texas 77079
T +1 281 589 7257
E usinfrastructure@rpsgroup.com

SURVEYED BY: KUO Inc.
FB NO. F-4578

This document is released for the purposes of interim review only under the authority of:

Jeremy Austin, P.E.
Texas P.E. No. 116816
03/30/2026

It is not to be used for bidding, construction, or permitting purposes.

CITY OF HOUSTON
HOUSTON PUBLIC WORKS

RECONSTRUCTION & REHABILITATION
COH LIFT STATIONS

WASTEWATER DETAILS
(SHEET 2 OF 7)
STD-C-2

WBS NUMBER	FOR CITY OF HOUSTON USE ONLY
R-000267-0178-3	
DRAWING SCALE	
AS NOTED	
CITY OF HOUSTON PM	
TAHA LOTIA	
SHEET NO. 12 OF 268	

PLOTTED: 3/30/2026 4:31 PM
PLOT STYLE: Coh_ctb_230809.ctb
FILE NAME: WASTEWATER DETAILS (SHEET 3 OF 7).dwg

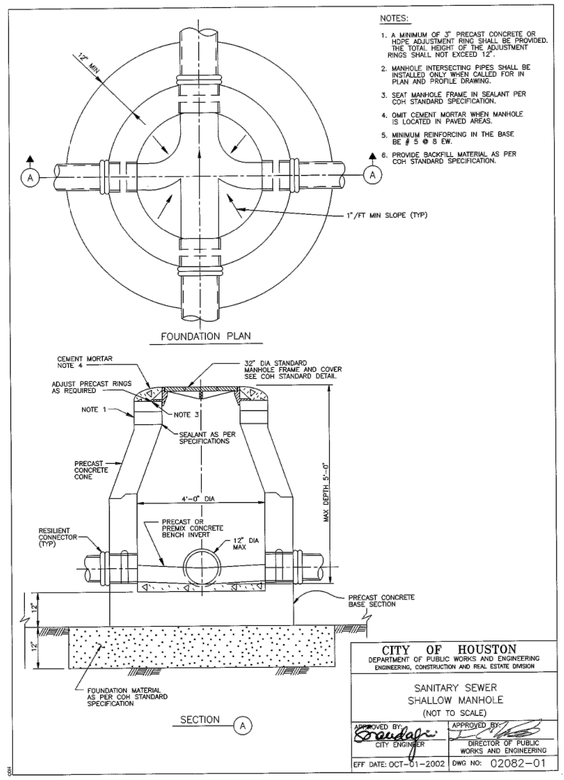

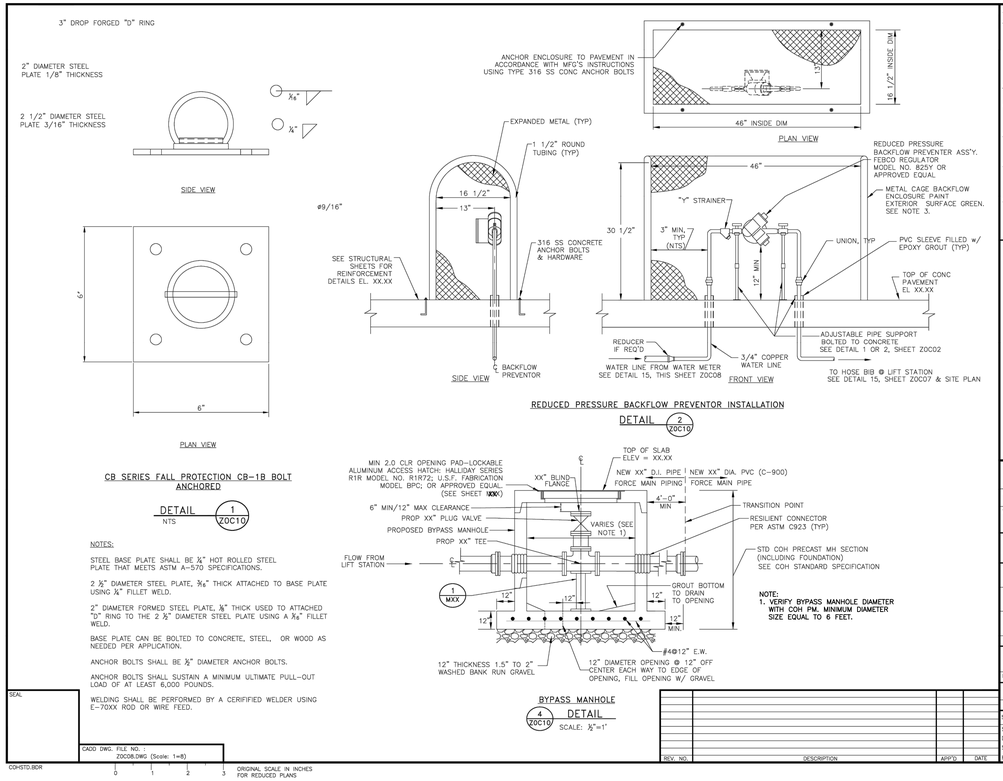

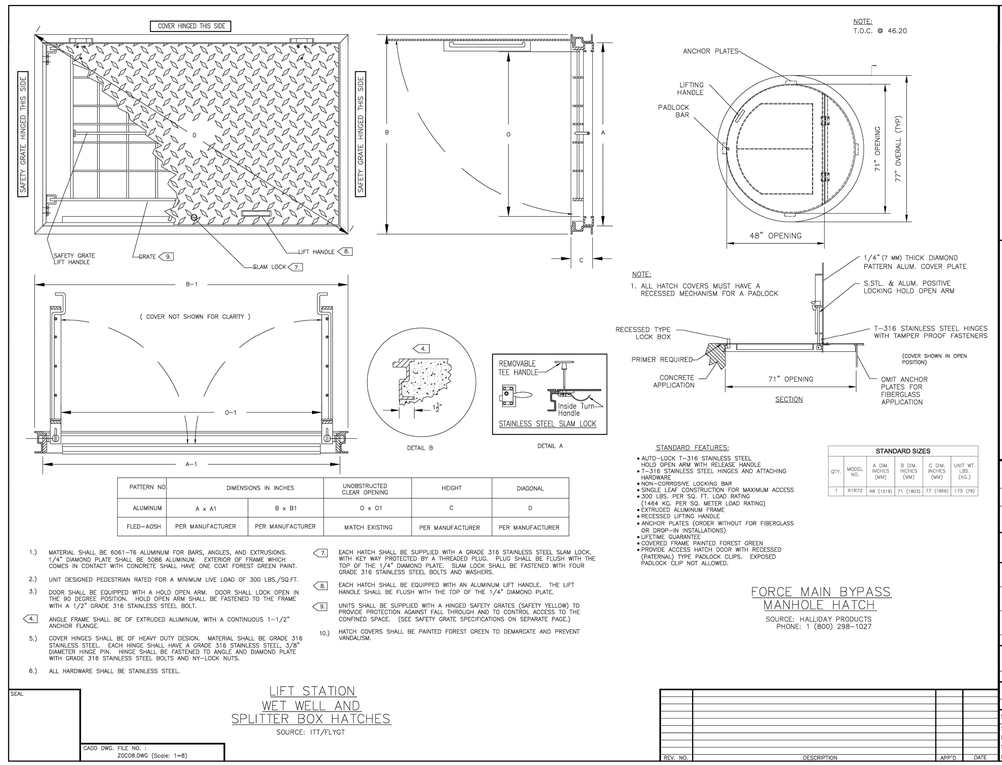

PATTERN NO.	DIMENSIONS IN INCHES		UNOBSTRUCTED CLEAR OPENING	HEIGHT	DIAGONAL
ALUMINUM	A x A1	B x B1	O x O1	C	D
FLED-AOSH	PER MANUFACTURER	PER MANUFACTURER	MATCH EXISTING	PER MANUFACTURER	PER MANUFACTURER

RPS
A TETRA TECH COMPANY
Texas PE Firm Reg. #F-929
575 N. Dairy Ashford, Suite 700,
Houston, Texas 77079
T +1 281 589 7257
E usinfrastructure@rpsgroup.com

SURVEYED BY: KUO Inc.
FB NO. F-4578

This document is released for the purposes of interim review only under the authority of:

Jeremy Austin, P.E.
Texas P.E. No. 116816
03/30/2026

It is not to be used for bidding, construction, or permitting purposes.

CITY OF HOUSTON
HOUSTON PUBLIC WORKS

RECONSTRUCTION & REHABILITATION COH LIFT STATIONS

WASTEWATER DETAILS (SHEET 3 OF 7) STD-C-3

WBS NUMBER	FOR CITY OF HOUSTON USE ONLY
R-000267-0178-3	
DRAWING SCALE	
AS NOTED	
CITY OF HOUSTON PM	
TAHA LOTIA	
SHEET NO. 13 OF 268	

PLOTTED: 3/30/2026 4:31 PM
PLOT STYLE: CoH_ctb_230809.ctb
FILE NAME: WASTEWATER DETAILS (SHEET 4 OF 7).dwg

TYPE 1
OPEN PICK HOLE

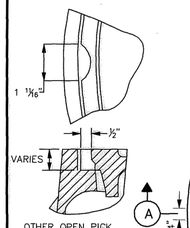

NOTE:
23 1/2" MANHOLE COVER CAN BE USED ONLY FOR REPLACEMENT OF EXISTING MANHOLE COVER.

PLAN

23 1/2" MANHOLE COVER WITH FRAME

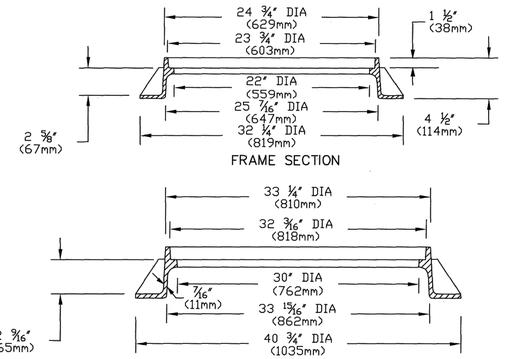

FRAME SECTION

SECTION (A)

32" MANHOLE COVER WITH FRAME

1) NOTE: APPROXIMATE WEIGHTS.
FRAME- 170 LBS 77 kg
COVER- 270 LBS 123 kg
UNIT- 440 LBS 200 kg
2) MATERIAL- GRAY IRON ASTM A48 CL35B
3) CASTING TO MEET M306 PROOF LOAD SPECIFICATION
4) MODEL V-14240 ASY OR APPROVED EQUAL

CITY OF HOUSTON
DEPARTMENT OF PUBLIC WORKS AND ENGINEERING

SANITARY SEWER AND WATER MANHOLE FRAME AND COVER

(NOT TO SCALE)

APPROVED BY:	APPROVED BY:
CITY ENGINEER	DIRECTOR OF PUBLIC WORKS AND ENGINEERING
EFF DATE: JUL-01-2016	DWG NO: 02090-01

ASSEMBLY VIEW

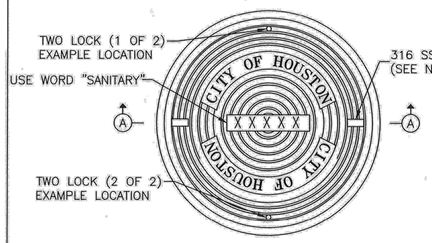

ASSEMBLY VIEW - W/ HINGE

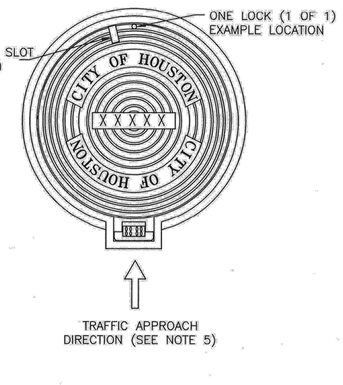

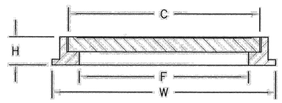

SECTION A-A

COVER SIZE	C	F	H	W
	IN (MAX)	IN (EXACT)	IN (MAX)	IN (MAX)
32"	35.75	30.00	5.00	41.00

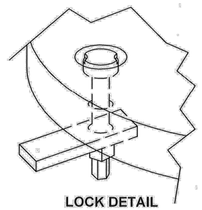

LOCK DETAIL

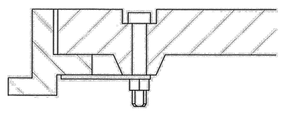

LOCK CUT AWAY SECTION DETAIL

NOTES:

1. FRAME AND COVER MEETS OR EXCEEDS REQUIREMENTS FOR CITY OF HOUSTON SPECIFICATION 02091 – NON METALLIC FRAMES, GRATES, RINGS, AND COVERS.
2. COVER SHALL HAVE A MINIMUM OF ONE (1) 316 STAINLESS STEEL PICK BAR SLOT MOLDED IN THE COMPOSITE MATRIX.
3. LOCK AND BOLT SHALL BE 316 STAINLESS STEEL AND BE ¼" TURN CAM/PADDLE TYPE.
4. MANHOLE DESIGNS WITHOUT HINGES MUST INCLUDE A MINIMUM OF TWO (2) LOCKS LOCATED ON OPPOSITE EDGES. DESIGNS WITH A HINGE MUST INCLUDE A MINIMUM OF ONE (1) LOCK LOCATED OPPOSITE EDGE OF THE HINGE MECHANISM.
5. MANHOLE INSTALLATIONS WITH HINGES SHALL ORIENT HINGES PARALLEL TO TRAFFIC FLOW DIRECTION. THE HINGE WILL BE LOCATED ON THE APPROACHING DIRECTION OF TRAFFIC.

CITY OF HOUSTON
HOUSTON PUBLIC WORKS

NON-METALLIC MANHOLE FRAME AND COVER

(NOT TO SCALE)

APPROVED BY:	APPROVED BY:
CITY ENGINEER	DIRECTOR OF HOUSTON PUBLIC WORKS
EFF DATE: JUL-01-2021	DWG NO: 02091-01

RPS
A TETRA TECH COMPANY
Texas PE Firm Reg. #F-929
575 N. Dairy Ashford, Suite 700,
Houston, Texas 77079
T +1 281 589 7257
E usinfrastructure@rpsgroup.com

SURVEYED BY: KUO Inc.
FB NO. F-4578

This document is released for the purposes of interim review only under the authority of:

Jeremy Austin, P.E.
Texas P.E. No. 116816
03/30/2026

It is not to be used for bidding, construction, or permitting purposes.

CITY OF HOUSTON
HOUSTON PUBLIC WORKS

RECONSTRUCTION & REHABILITATION
COH LIFT STATIONS

WASTEWATER DETAILS
(SHEET 4 OF 7)
STD-C-4

WBS NUMBER	FOR CITY OF HOUSTON USE ONLY
R-000267-0178-3	
DRAWING SCALE	
AS NOTED	
CITY OF HOUSTON PM	
TAHA LOTIA	
SHEET NO. 14 OF 268	

PLOTTED: 3/30/2026 4:31 PM
PLOT STYLE: Coh_ctb_230809.ctb
FILE NAME: WASTEWATER DETAILS (SHEET 5 OF 7).dwg

HALF SECTION UNDER PAVEMENT

HALF SECTION UNDER NATURAL GROUND

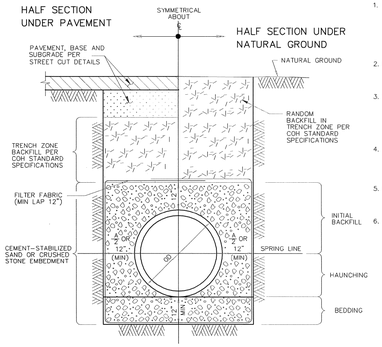

TYPICAL CROSS-SECTION

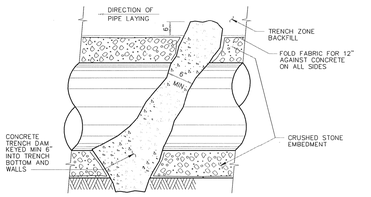

LONGITUDINAL SECTION ALONG PIPE ℄
AT EMBEDMENT TRENCH DAM

NOTES:

1. MIN TRENCH WIDTH SHALL BE PIPE OD PLUS AN ALLOWANCE "A" FOR THE NOMINAL PIPE SIZE:

NOMINAL PIPE SIZE	"A"
18" TO 30"	24"
OVER 30"	36"

2. MAX TRENCH WIDTH SHALL BE NOT GREATER THAN MIN TRENCH WIDTH PLUS 24 INCHES, UNLESS OTHERWISE NOTED.
3. TRENCH DAM MAY BE FORMED OR UNFORMED.ACTUAL SHAPE OF CONCRETE TRENCH DAM CROSS SECTION MAY BE DETERMINED BY CONTRACTOR IN FIELD, MEETING MINIMUM THICKNESS AND KEY DEPTH REQUIREMENTS.
4. TRENCH DAM SHALL BE PLACED AT LEAST 5 FT AWAY FROM ANY PIPELINE STRUCTURE.SEE SPECIFICATIONS FOR OTHER REQUIREMENTS.
5. PLACE TRENCH DAMS IN CLASS I EMBEDMENTS AT THE MIDPOINT OF LINE SEGMENTS LONGER THAN 100 FEET BETWEEN MANHOLES.
6. CEMENT-STABILIZED SAND IS PREFERRED FOR EMBEDMENT, BUT CRUSHED STONE MAY BE USED ONLY WHEN SPECIFIED ON THE PLANS.

CITY OF HOUSTON
DEPARTMENT OF PUBLIC WORKS AND ENGINEERING

SANITARY SEWER EMBEDMENT AND TRENCH ZONE BACKFILL FOR DRY OR WET STABLE TRENCH

(NOT TO SCALE)

APPROVED BY: CITY ENGINEER | APPROVED BY: DIRECTOR OF PUBLIC WORKS AND ENGINEERING

EFF DATE: JUL-01-2016 | DWG NO.: 02317-01

NOTES:

1. ACTUAL SHAPE OF CONCRETE TRENCH DAM CROSS SECTION MAY BE DETERMINED BY CONTRACTOR IN FIELD, MEETING MINIMUM THICKNESS AND KEY DEPTH REQUIREMENTS.
2. THIS DETAIL SHALL BE USED WITH CEMENT STABILIZED SAND EMBEDMENT, OR OTHER CLASS II EMBEDMENT IN WET STABLE TRENCH CONDITIONS.
3. PLACE TRENCH DAMS IN CLASS I EMBEDMENTS AT THE MIDPOINT OF LINE SEGMENTS LONGER THAN 100 FEET BETWEEN MANHOLES.

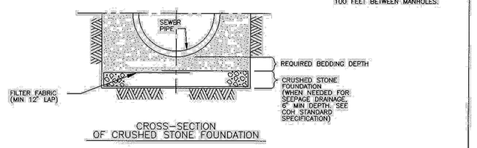

CROSS-SECTION
OF CRUSHED STONE FOUNDATION

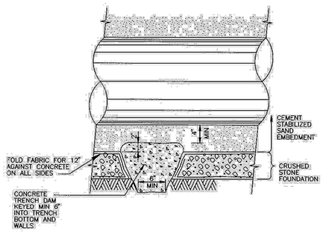

LONGITUDINAL SECTION ALONG PIPE ℄
AT FOUNDATION TRENCH DAM

CITY OF HOUSTON
DEPARTMENT OF PUBLIC WORKS AND ENGINEERING
ENGINEERING, CONSTRUCTION AND REAL ESTATE DIVISION

SANITARY OR STORM SEWER CRUSHED STONE FOUNDATION FOR WET STABLE TRENCH

(NOT TO SCALE)

APPROVED BY: CITY ENGINEER | APPROVED BY: DIRECTOR OF PUBLIC WORKS AND ENGINEERING

EFF DATE: OCT-01-2002 | DWG NO.: 02317-02

02317-03

NOTES:

1. THIS DETAIL MAY BE USED ONLY FOR DRY STABLE TRENCH CONDITIONS PER COH STANDARD. SEE COH STANDARD SPECIFICATION FOR REQUIREMENTS IN OTHER CONDITIONS.
2. MIN. TRENCH WIDTH SHALL BE PIPE OD PLUS AN ALLOWANCE "A" FOR THE NOMINAL PIPE SIZE:

NOMINAL PIPE SIZE	"A"
18" TO 30"	24"
OVER 30"	36"

3. MAX. TRENCH WIDTH SHALL BE NOT GREATER THAN MIN. TRENCH WIDTH PLUS 24 INCHES, UNLESS OTHERWISE NOTED.
4. ALTERNATIVE EMBEDMENT BACKFILL MATERIALS FOR FORCE MAINS MAY BE ALLOWED. SEE COH STANDARD SPECIFICATIONS.

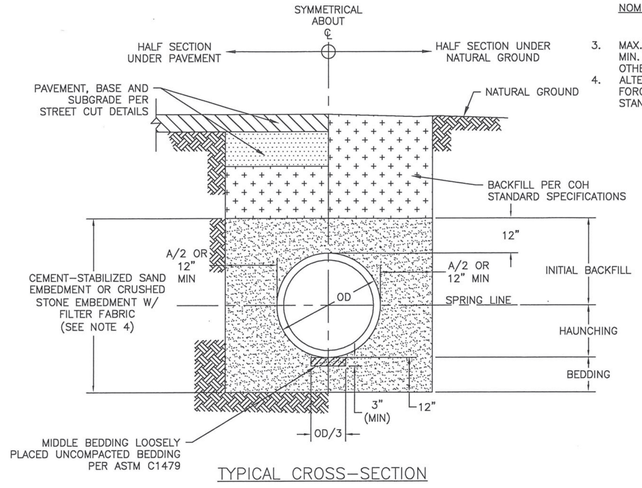

TYPICAL CROSS-SECTION

SANITARY OR STORM SEWER BEDDING AND BACKFILL
FOR DRY STABLE TRENCH
NTS

RPS
A TETRA TECH COMPANY
Texas PE Firm Reg. #F-929
575 N. Dairy Ashford, Suite 700,
Houston, Texas 77079
T +1 281 589 7257
E usinfrastructure@rpsgroup.com

SURVEYED BY: KUO Inc.
FB NO. F-4578

This document is released for the purposes of interim review only under the authority of:

Jeremy Austin, P.E.
Texas P.E. No. 116816
03/30/2026

It is not to be used for bidding, construction, or permitting purposes.

CITY OF HOUSTON
HOUSTON PUBLIC WORKS

RECONSTRUCTION & REHABILITATION
COH LIFT STATIONS

WASTEWATER DETAILS
(SHEET 5 OF 7)
STD-C-5

WBS NUMBER	FOR CITY OF HOUSTON USE ONLY
R-000267-0178-3	
DRAWING SCALE	
AS NOTED	
CITY OF HOUSTON PM	
TAHA LOTIA	
SHEET NO. 15 OF 268	

PLOTTED: 3/30/2026 4:31 PM
PLOT STYLE: Coh_ctb_230809.ctb
FILE NAME: WASTEWATER DETAILS (SHEET 6 OF 7).dwg

NOTE:
1. THE CONTRACTOR SHALL CENTER A MINIMUM OF 18 FOOT JOINT OF DUCTILE IRON PIPE OR C900 PVC PIPE ACROSS THE CENTER OF THE PROPOSED STORM SEWER.

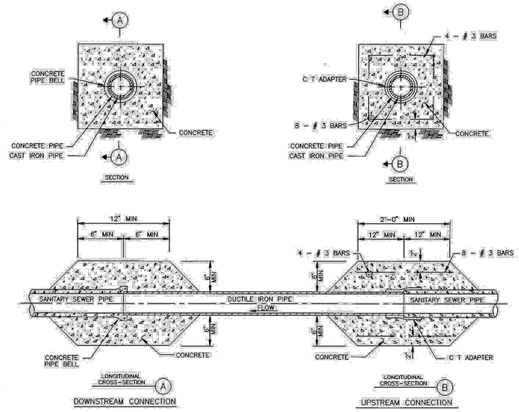

CITY OF HOUSTON
DEPARTMENT OF PUBLIC WORKS AND ENGINEERING
ENGINEERING, CONSTRUCTION AND REAL ESTATE DIVISION

SANITARY SEWER
DUCTILE IRON PIPE
STORM SEWER CROSSING
(NOT TO SCALE)

APPROVED BY: Brandagini, CITY ENGINEER	APPROVED BY: DIRECTOR OF PUBLIC WORKS AND ENGINEERING
EFF DATE: OCT-01-2002	DWG NO: 02531-03

NOTES:
1. PLACE AND COMPACT EMBEDMENT AND TRENCH ZONE BACKFILL PER COH STANDARD SPECIFICATIONS.

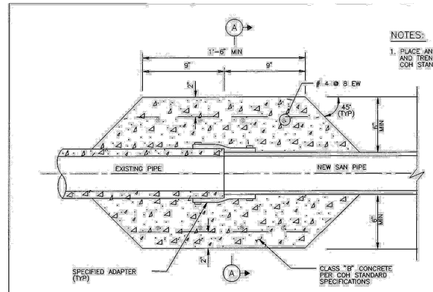

CITY OF HOUSTON
DEPARTMENT OF PUBLIC WORKS AND ENGINEERING
ENGINEERING, CONSTRUCTION AND REAL ESTATE DIVISION

SANITARY SEWER
PIPE TRANSITION FOR 36" SEWER AND SMALLER
(NOT TO SCALE)

APPROVED BY: Brandagini, CITY ENGINEER	APPROVED BY: DIRECTOR OF PUBLIC WORKS AND ENGINEERING
EFF DATE: OCT-01-2002	DWG NO: 02531-04

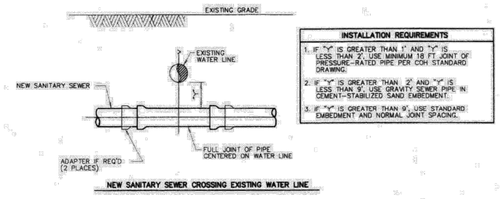

INSTALLING SANITARY SEWERS CROSSING OR PARALLEL TO WATER LINES

NOTES:
1. SANITARY SEWER MUST BE BELOW WATER LINE WHEREVER POSSIBLE. WHEN WATERLINE IS BELOW THE SANITARY SEWER PROVIDE MINIMUM 2 FT SEPARATION AND INSTALL PIPE IN ACCORDANCE TO CHAPTER 7 TABLE 7.3 OF COH DESIGN MANUAL.
2. WHEN PRESSURE-RATED PIPE IS REQUIRED, PROVIDE PIPE WITH MINIMUM 150 psi PRESSURE RATING.
3. ADAPTERS MUST BE FACTORY MOLDED OR FABRICATED, WITH RING STIFFNES AT LEAST EQUAL TO THE ADJOINING SANITARY SEWER PIPE, AND USING RESILIENT GASKET OR SEAL MATERIAL. FLEXIBLE RUBBER "BOOT" TYPE ADAPTERS WILL NOT BE ACCEPTED.
4. INSTALL FORCE MAINS SAME AS FOR GRAVITY SEWER, USING SPECIFIED PRESSURE PIPE.
5. "Y" MUST ALWAYS BE GREATER THAN OR EQUAL TO 1 FT FOR PRESSURE RATED SS AND 2 FT FOR NON-PRESSURE RATED SS.
6. "X" MUST BE GREATER THAN OR EQUAL TO 4 FT.
7. ALTERNATIVES MAY BE SHOWN ON THE DRAWINGS OR DESCRIBED IN THE SPECIFICATIONS.
8. SEPARATION REQUIREMENTS SHOWN HERE DO NOT APPLY TO SERVICE CONNECTIONS – REFER TO PLUMBING CODE FOR APPLICABLE REQUIREMENTS.

CITY OF HOUSTON
DEPARTMENT OF PUBLIC WORKS AND ENGINEERING

SANITARY SEWER
INSTALLING SANITARY SEWERS CROSSING OR PARALLEL TO WATER LINES
(NOT TO SCALE)

APPROVED BY: CITY ENGINEER	APPROVED BY: DIRECTOR OF PUBLIC WORKS AND ENGINEERING
EFF DATE: JUL-01-2010	DWG NO: 02531-05

RPS
A TETRA TECH COMPANY
Texas PE Firm Reg. #F-929
575 N. Dairy Ashford, Suite 700,
Houston, Texas 77079
T +1 281 589 7257
E usinfrastructure@rpsgroup.com

SURVEYED BY: KUO Inc.
FB NO. F-4578

This document is released for the purposes of interim review only under the authority of:

Jeremy Austin, P.E.
Texas P.E. No. 116816
03/30/2026

It is not to be used for bidding, construction, or permitting purposes.

CITY OF HOUSTON
HOUSTON PUBLIC WORKS

RECONSTRUCTION & REHABILITATION
COH LIFT STATIONS

WASTEWATER DETAILS
(SHEET 6 OF 7)
STD-C-6

WBS NUMBER	FOR CITY OF HOUSTON USE ONLY
R-000267-0178-3	
DRAWING SCALE	
AS NOTED	
CITY OF HOUSTON PM	
TAHA LOTIA	
SHEET NO. 16 OF 268	

PLOTTED: 3/30/2026 4:31 PM
PLOT STYLE: Coh_ctb_230809.ctb
FILE NAME: WASTEWATER DETAILS (SHEET 7 OF 7).dwg

NOTES:
1. REPLACE EXISTING SERVICE LINE TO EXTENT SHOWN ON PLAN AND PROFILE DRAWINGS, OR AS SPECIFIED.
2. EXCAVATE & REMOVE EXISTING SEWER LATERAL AS REQUIRED TO ALLOW RECONSTRUCTION.

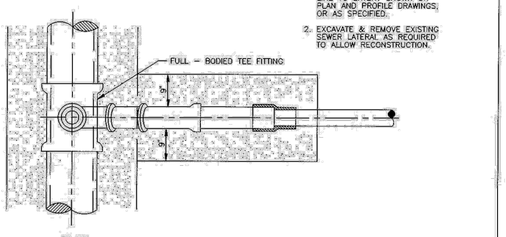

CROSS–SECTION OF SEWER AT SERVICE CONNECTION

CITY OF HOUSTON DEPARTMENT OF PUBLIC WORKS AND ENGINEERING ENGINEERING, CONSTRUCTION AND REAL ESTATE DIVISION	
SANITARY SEWER SERVICE RECONNECTION WITH STACK ON NEW OR REPLACEMENT SEWER (NOT TO SCALE)	
APPROVED BY: CITY ENGINEER	APPROVED BY: DIRECTOR OF PUBLIC WORKS AND ENGINEERING
EFF DATE: OCT–01–2002	DWG NO: 02534–02

NOTE:
1. REPLACE EXISTING SERVICE LINE TO EXTENT SHOWN ON PLAN AND PROFILE DRAWINGS, OR AS SPECIFIED.

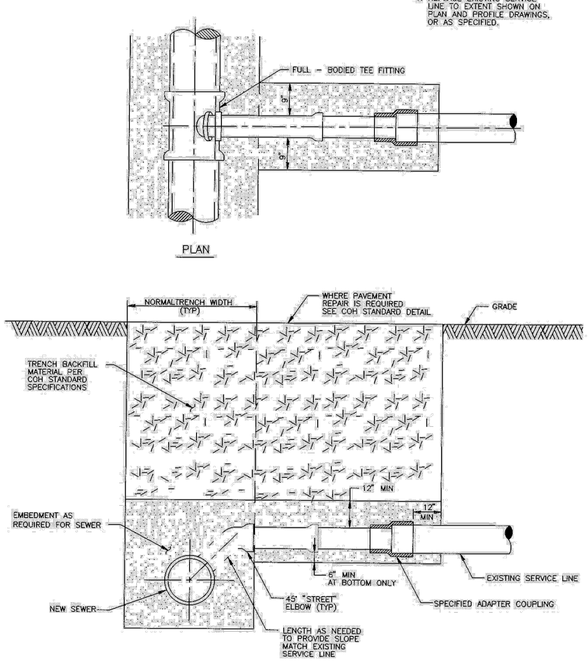

CROSS–SECTION OF SEWER AT SERVICE CONNECTION

CITY OF HOUSTON DEPARTMENT OF PUBLIC WORKS AND ENGINEERING ENGINEERING, CONSTRUCTION AND REAL ESTATE DIVISION	
SANITARY SEWER SERVICE RECONNECTION ON NEW OR REPLACEMENT SEWER (NOT TO SCALE)	
APPROVED BY: CITY ENGINEER	APPROVED BY: DIRECTOR OF PUBLIC WORKS AND ENGINEERING
EFF DATE: OCT–01–2002	DWG NO: 02534–04

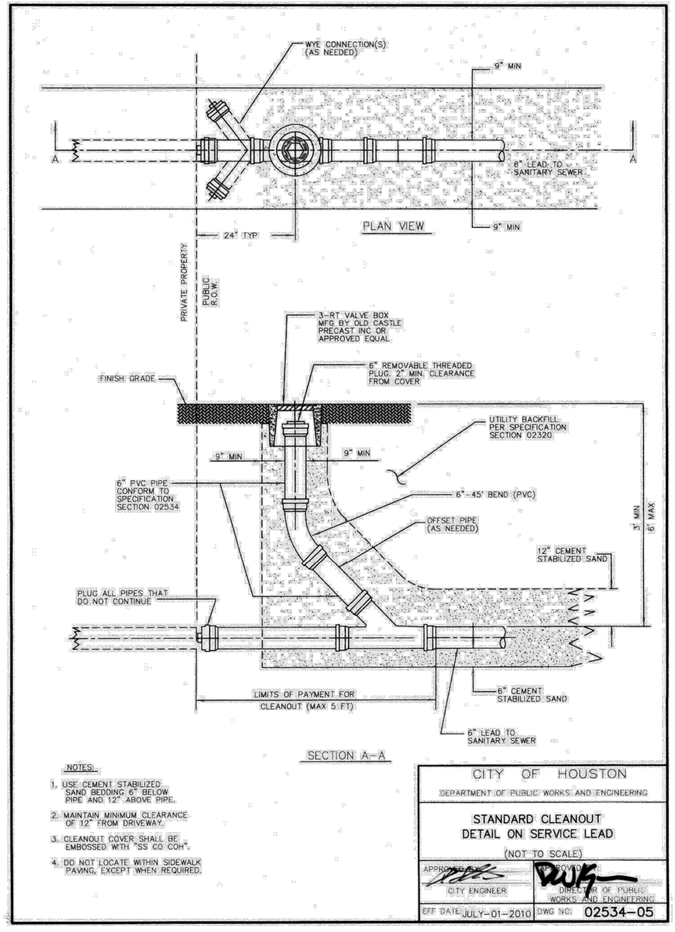

SECTION A–A

NOTES:
1. USE CEMENT STABILIZED SAND BEDDING 6" BELOW PIPE AND 12" ABOVE PIPE.
2. MAINTAIN MINIMUM CLEARANCE OF 12" FROM DRIVEWAY.
3. CLEANOUT COVER SHALL BE EMBOSSED WITH "SS CO COH".
4. DO NOT LOCATE WITHIN SIDEWALK PAVING, EXCEPT WHEN REQUIRED.

CITY OF HOUSTON DEPARTMENT OF PUBLIC WORKS AND ENGINEERING	
STANDARD CLEANOUT DETAIL ON SERVICE LEAD (NOT TO SCALE)	
APPROVED BY: CITY ENGINEER	APPROVED BY: DIRECTOR OF PUBLIC WORKS AND ENGINEERING
EFF DATE: JULY–01–2010	DWG NO: 02534–05

RPS
A TETRA TECH COMPANY
Texas PE Firm Reg. #F-929
575 N. Dairy Ashford, Suite 700,
Houston, Texas 77079
T +1 281 589 7257
E usinfrastructure@rpsgroup.com

SURVEYED BY: KUO Inc.
FB NO. F–4578

This document is released for the purposes of interim review only under the authority of:

Jeremy Austin, P.E.
Texas P.E. No. 116816
03/30/2026

It is not to be used for bidding, construction, or permitting purposes.

CITY OF HOUSTON
HOUSTON PUBLIC WORKS

RECONSTRUCTION & REHABILITATION COH LIFT STATIONS

WASTEWATER DETAILS
(SHEET 7 OF 7)
STD–C–7

WBS NUMBER	FOR CITY OF HOUSTON USE ONLY
R–000267–0178–3	
DRAWING SCALE	
AS NOTED	
CITY OF HOUSTON PM	
TAHA LOTIA	
SHEET NO. 17 OF 268	

PLOTTED: 3/30/2026 4:31 PM
PLOT STYLE: Coh_ctb_230809.ctb
FILE NAME: PAVEMENT DETAILS (SHEET 1 OF 11).dwg

DISCLAIMER:
THE USE OF THIS STANDARD IS GOVERNED BY THE TEXAS ENGINEERING PRACTICE ACT. THE DESIGN REQUIREMENTS ON THIS STANDARD DO NOT PURPORT TO ADDRESS ALL OF THE SAFETY CONCERNS ASSOCIATED WITH THEIR USE. THE ENGINEER OF RECORD (EOR) IS, IN HIS/HER THESE DESIGN REQUIREMENTS AND BY AUTHORIZING THEIR USE, ACCEPTS RESPONSIBILITY FOR THOSE WORK ELEMENTS FOR WHICH HE/SHE IS THE EOR. HOUSTON PUBLIC WORKS MAKES NO WARRANTY OF ANY KIND, EXPRESSED OR IMPLIED, AS TO ANY MATTER WHATSOEVER, INCLUDING ITS USE OR SUITABILITY FOR THOSE WORK ELEMENTS FOR WHICH THE EOR IS RESPONSIBLE. HOUSTON PUBLIC WORKS ASSUMES NO RESPONSIBILITY FOR INCORRECT RESULTS OR DAMAGES RESULTING FROM ITS USE.

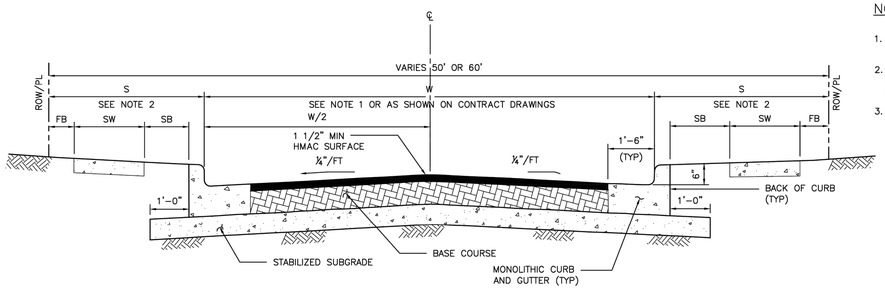

HMAC PAVEMENT – CURB & GUTTER SECTION

(NOT APPLICABLE TO ETJ OF CITY OF HOUSTON)

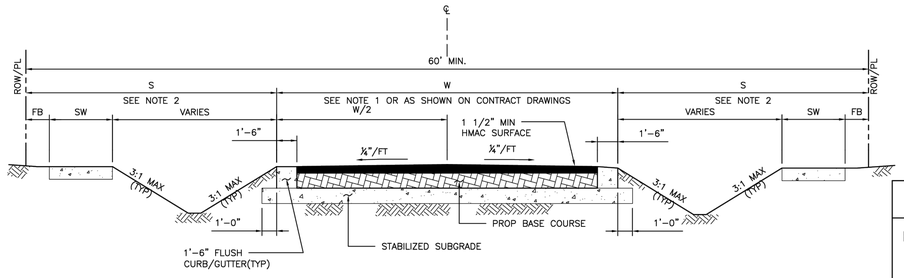

HMAC PAVEMENT – DITCH SECTION

(NOT APPLICABLE TO ETJ OF CITY OF HOUSTON)

NOTES:

1. FOR TRAVEL WAY WIDTH (W) REFER TO IDM SECTION 10.3.03.A.
2. REFER TO CONTRACT DRAWINGS FOR "S" DIMENSION (S), SIDEWALK (SW), FRONTAGE BUFFER (FB), AND SAFETY BUFFER (SB) WIDTHS.
3. BASE COURSE SHALL BE:
   ALTERNATES:
   A) 6" (MIN) HOT MIX ASPHALTIC CONCRETE.
   B) 8" (MIN) CRUSHED CONCRETE.

CITY OF HOUSTON
HOUSTON PUBLIC WORKS STANDARD

HOT MIX ASPHALTIC CONCRETE PAVEMENT DETAILS

(SCALE: NOT TO SCALE)

APPROVED BY:

DocuSigned by: Sukut Iranwar — CITY ENGINEER	DocuSigned by: Carol Haddock — DIRECTOR OF HPW
DocuSigned by: KHANG NGUYEN — CITY TRAFFIC ENGINEER	

EFF DATE: NOV-27-2023 | DWG NO: 02741-01

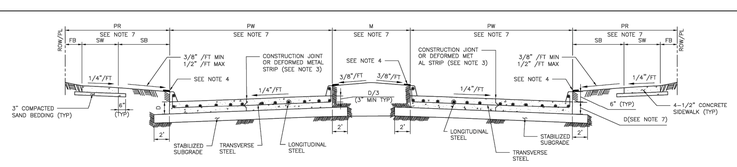

TYPICAL DOUBLE ROADWAY SECTION FOR CONCRETE PAVEMENT WITH CURBS

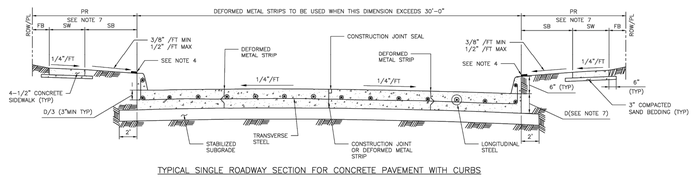

TYPICAL SINGLE ROADWAY SECTION FOR CONCRETE PAVEMENT WITH CURBS

NOTES:

1. THE MAXIMUM WIDTH BETWEEN LONGITUDINAL JOINTS SHALL NOT EXCEED 15'-0".
2. ALL EARTHEN AREAS ARE TO BE HYDROMULCHED UNLESS SHOWN OTHERWISE ON DRAWINGS.
3. CONTRACTOR MAY SAW CUT IN LIEU OF DEFORMED METAL STRIP.
4. USE STRIP OF SOD GRASS TO PREVENT EROSION UNTIL STAND OF GRASS IS ESTABLISHED.
5. AN EQUAL OR LARGER AREA OF WELDED REINFORCEMENT BAR CONFORMING TO ASTM A497, MAY BE SUBSTITUTED FOR REBARS LISTED IN TABLE 1.
6. IF AVAILABLE ROW IS NOT SUFFICIENT TO ACCOMMODATE SIDEWALK WIDTH (SW) ACCORDING TO IDM REQUIREMENTS, ENGINEER SHALL OBTAIN A VARIANCE FROM THE CITY ENGINEER.
7. REFER TO CONTRACT DRAWINGS FOR PAVEMENT WIDTH (PW) AND PAVEMENT THICKNESS (D), MEDIAN (M), PEDESTRIAN REALM (PR), SIDEWALK (SW), FRONTAGE BUFFER (FB), AND SAFETY BUFFER (SB) WIDTHS.

TABLE 1

REINFORCING STEEL BAR SIZES AND SPACINGS FOR VARIOUS PAVEMENT THICKNESSES (D) WITH: MAXIMUM TRANSVERSE CONTROL JOINT SPACING = 20'-0"
MAXIMUM EXPANSION JOINT SPACING = 80'-0"
f'c = 4,000 PSI/28 DAYS AND FY = 60,000 PSI

PAVEMENT THICKNESS 'D' (IN)	PAVEMENT WIDTH 'PW' (FT)	LONGITUDINAL STEEL									TRAVERSE STEEL		
		#4 BARS			#5 BARS			#6 BARS			#4 BARS	#5 BARS	#6 BARS
		NUMBER OF BARS	SPACING (IN)	END BAR SPACING (IN)	NUMBER OF BARS	SPACING (IN)	END BAR SPACING (IN)	NUMBER OF BARS	SPACING (IN)	END BAR SPACING (IN)	SPACING (IN)	SPACING (IN)	SPACING (IN)
6	28	17	20.50	4.00	–	–	–	–	–	–	36	–	–
7	25	17	18.25	4.00	–	–	–	–	–	–	36	–	–
7	35	24	18.00	3.00	–	–	–	–	–	–	36	–	–
7	36	25	17.75	3.00	–	–	–	–	–	–	36	–	–
7	37	25	18.25	3.00	–	–	–	–	–	–	36	–	–
7	41	28	18.00	3.00	–	–	–	–	–	–	36	–	–
7	45	31	17.75	3.75	–	–	–	–	–	–	36	–	–
8	25	20	15.50	2.75	13	24.50	3.0	–	–	–	36	36	–
8	34	27	15.50	2.50	17	25.00	4.0	–	–	–	36	36	–
8	35	27	16.00	2.00	18	24.25	4.0	–	–	–	36	36	–
8	36	28	15.75	3.25	18	25.00	3.0	–	–	–	30	36	–
8	44	24	15.75	4.00	22	24.75	4.0	–	–	–	30	36	–
8	45	35	15.75	2.25	23	24.25	3.0	–	–	–	30	36	–
9	25	22	14.00	3.00	14	22.50	4.0	–	–	–	36	36	–
9	34	31	13.50	2.00	19	22.25	3.5	–	–	–	30	36	–
9	35	31	13.75	3.75	20	21.75	3.5	–	–	–	30	36	–
9	36	32	13.75	3.00	21	21.25	3.5	–	–	–	30	36	–
9	44	39	13.75	2.75	25	21.75	3.0	–	–	–	24	36	–
9	45	39	14.00	4.00	26	21.25	4.5	–	–	–	24	36	–
10	25	24	12.75	3.50	17	18.25	4.0	–	–	–	36	36	36
10	34	33	12.50	4.00	21	20.00	4.0	–	–	–	30	36	36
10	35	34	12.50	3.75	23	18.75	4.0	–	–	–	30	36	36
10	36	35	12.50	3.50	24	18.50	3.0	–	–	–	30	36	36
10	44	44	12.00	4.00	29	18.50	4.5	–	–	–	24	36	36
10	45	44	12.50	3.00	29	19.00	3.0	–	–	–	24	36	36
11	25	27	11.25	3.00	17	18.25	4.0	12	26.75	3	36	36	36
11	34	36	11.50	2.75	24	17.50	2.5	17	25.00	4	24	36	36
11	35	37	11.50	3.00	24	18.00	3.0	17	25.75	4	24	36	36
11	36	40	11.00	2.00	25	17.75	3.0	17	26.50	4	24	36	36
11	44	48	11.125	2.50	30	18.00	3.0	21	26.00	4	24	36	36
11	45	49	11.125	3.00	31	17.75	4.0	22	25.50	3	24	36	36
12	25	–	–	–	19	16.25	4.0	13	24.50	3	36	36	36
12	34	–	–	–	26	16.00	4.0	18	23.50	4	24	36	36
12	35	–	–	–	26	16.50	4.0	19	23.00	3	24	36	36
12	36	–	–	–	27	16.25	4.5	20	22.25	4.5	24	36	36
12	44	–	–	–	33	16.25	4.0	24	22.50	5	24	30	36
12	45	–	–	–	35	15.75	3.0	25	22.25	3	24	30	36

MINIMUM LAP LENGTH (L):
A. # 4 BARS ; L = 22 INCHES
B. # 5 BARS ; L = 27 INCHES
C. # 6 BARS ; L = 32 INCHES

DISCLAIMER:
THE USE OF THIS STANDARD IS GOVERNED BY THE TEXAS ENGINEERING PRACTICE ACT. THE DESIGN REQUIREMENTS ON THIS STANDARD DO NOT PURPORT TO ADDRESS ALL OF THE SAFETY CONCERNS ASSOCIATED WITH THEIR USE. THE ENGINEER OF RECORD (EOR) IS, IN HIS/HER THESE DESIGN REQUIREMENTS AND BY AUTHORIZING THEIR USE, ACCEPTS RESPONSIBILITY FOR THOSE WORK ELEMENTS FOR WHICH HE/SHE IS THE EOR. HOUSTON PUBLIC WORKS MAKES NO WARRANTY OF ANY KIND, EXPRESSED OR IMPLIED, AS TO ANY MATTER WHATSOEVER, INCLUDING ITS USE OR SUITABILITY FOR THOSE WORK ELEMENTS FOR WHICH THE EOR IS RESPONSIBLE. HOUSTON PUBLIC WORKS ASSUMES NO RESPONSIBILITY FOR INCORRECT RESULTS OR DAMAGES RESULTING FROM ITS USE.

APPROVED BY:	APPROVED BY:
DocuSigned by: Sukut Iranwar — CITY ENGINEER	DocuSigned by: KHANG NGUYEN — CITY TRAFFIC ENGINEER

APPROVED BY:
DocuSigned by: Carol Haddock
DIRECTOR OF HOUSTON PUBLIC WORKS

EFF DATE: NOV-27-2023 | DWG NO: 02751-01

CITY OF HOUSTON
HOUSTON PUBLIC WORKS STANDARD

CONCRETE PAVEMENT DETAILS

	FOR CITY OF HOUSTON USE ONLY
DRAWING SCALE	
NOT TO SCALE	

RPS
A TETRA TECH COMPANY
Texas PE Firm Reg. #F-929
575 N. Dairy Ashford, Suite 700,
Houston, Texas 77079
T +1 281 589 7257
E usinfrastructure@rpsgroup.com

SURVEYED BY: KUO Inc.
FB NO. F-4578

This document is released for the purposes of interim review only under the authority of:

Jeremy Austin, P.E.
Texas P.E. No. 116816
03/30/2026

It is not to be used for bidding, construction, or permitting purposes.

CITY OF HOUSTON
HOUSTON PUBLIC WORKS

RECONSTRUCTION & REHABILITATION
COH LIFT STATIONS

PAVEMENT DETAILS
(SHEET 1 OF 11)
STD-C-8

WBS NUMBER	FOR CITY OF HOUSTON USE ONLY
R-000267-0178-3	
DRAWING SCALE	
AS NOTED	
CITY OF HOUSTON PM	
TAHA LOTIA	
SHEET NO. 18 OF 268	

PLOT STYLE: Coh_ctb_230809.ctb
PLOTTED: 3/30/2026 4:31 PM
FILE NAME: PAVEMENT DETAILS (SHEET 2 OF 11).dwg

DISCLAIMER:
THE USE OF THIS STANDARD IS GOVERNED BY THE TEXAS ENGINEERING PRACTICE ACT. THE DESIGN REQUIREMENTS ON THIS STANDARD DO NOT PURPORT TO ADDRESS ALL OF THE SAFETY CONCERNS ASSOCIATED WITH THEIR USE. THE ENGINEER OF RECORD (EOR) IS TO REVIEW THESE DESIGN REQUIREMENTS AND BY AUTHORIZING THEIR USE ASSUMES RESPONSIBILITY FOR THE DESIGN AND ASSOCIATED SAFETY MEASURES. ANY MODIFICATIONS MADE BY THE EOR SHALL BE APPROVED BY THE CITY OF HOUSTON FOR ANY PURPOSES WHATSOEVER. THE CITY OF HOUSTON ASSUMES NO RESPONSIBILITY FOR INCORRECT RESULTS OR DAMAGES RESULTING FROM ITS USE.

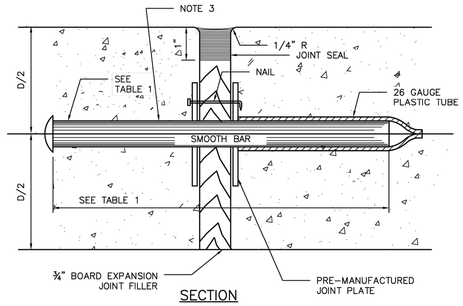

SECTION

DOWEL TYPE EXPANSION JOINT

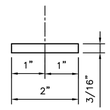

PLAN VIEW

JOINT PLATE

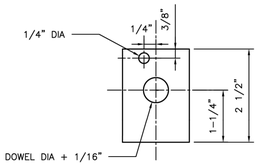

ELEVATION VIEW

JOINT PLATE

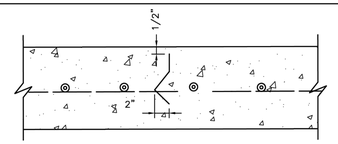

SECTION

DEFORMED METAL STRIP

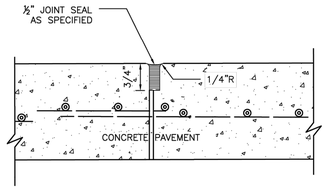

SECTION

CONSTRUCTION JOINT SEAL

TABLE 1

PAVEMENT THICKNESS (IN)	DOWEL SIZES AND SPACINGS		
	DIAMETER (IN)	LENGTH (IN)	SPACING (IN)
6	3/4	18	12
7	1	18	12
8	1	18	12
9	1 1/4	18	12
10	1 1/4	18	12
11	1 1/4	18	12
12	1 1/4	18	12

NOTES:

1. STEEL TO MEET ASTM STANDARD SPECIFICATIONS FOR CONCRETE REINFORCING BARS. UNITS TO BE SPACED 12" CENTER ON CENTER.
2. EXPANSION JOINT TO BE PLACED AT THE END OF EACH CURB RADIUS.
3. CENTER DOWEL HORIZONTALLY ON JOINT.
4. CENTER DOWEL VERTICALLY IN CONCRETE BASE. EXTEND THICKENED CONCRETE AS NEEDED TO MAINTAIN 3" MIN COVER.
5. CITY OF HOUSTON APPROVED PRODUCTS MAY BE USED AS JOINT PLATE ALTERNATIVE.

CITY OF HOUSTON
HOUSTON PUBLIC WORKS STANDARD

PAVEMENT EXPANSION AND CONSTRUCTION JOINT DETAILS

(SCALE: NOT TO SCALE)

APPROVED BY:

DocuSigned by: Sukul Tanwar — CITY ENGINEER
DocuSigned by: KHANG NGUYEN — CITY TRAFFIC ENGINEER
DocuSigned by: Carl Haddock — DIRECTOR OF HPW

EFF DATE: NOV-27-2023 | DWG NO: 02752-01

DISCLAIMER:
THE USE OF THIS STANDARD IS GOVERNED BY THE TEXAS ENGINEERING PRACTICE ACT. THE DESIGN REQUIREMENTS ON THIS STANDARD DO NOT PURPORT TO ADDRESS ALL OF THE SAFETY CONCERNS ASSOCIATED WITH THEIR USE. THE ENGINEER OF RECORD (EOR) IS TO REVIEW THESE DESIGN REQUIREMENTS AND BY AUTHORIZING THEIR USE ASSUMES RESPONSIBILITY FOR THE DESIGN AND ASSOCIATED SAFETY MEASURES. ANY MODIFICATIONS MADE BY THE EOR SHALL BE APPROVED BY THE CITY OF HOUSTON FOR ANY PURPOSES WHATSOEVER. THE CITY OF HOUSTON ASSUMES NO RESPONSIBILITY FOR INCORRECT RESULTS OR DAMAGES RESULTING FROM ITS USE.

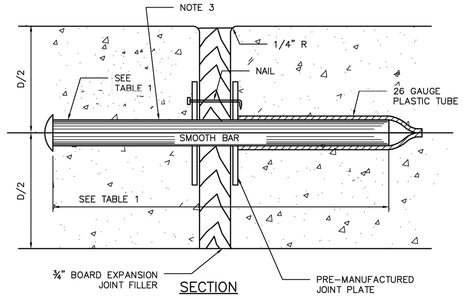

SECTION

DOWEL TYPE EXPANSION JOINT

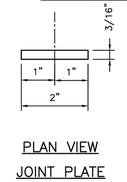

PLAN VIEW

JOINT PLATE

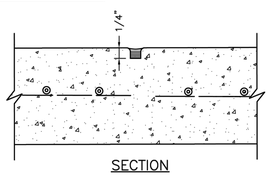

SECTION

CONTROL JOINT

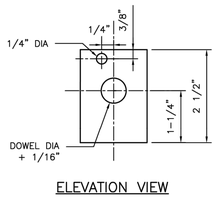

ELEVATION VIEW

JOINT PLATE

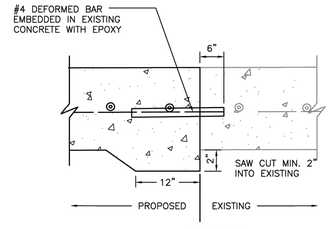

SECTION

SIDEWALK TO EXISTING SIDEWALK

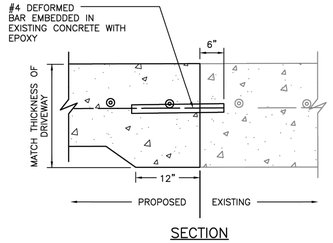

SECTION

SIDEWALK TO EXISTING DRIVEWAY

TABLE 1

PAVEMENT THICKNESS (IN)	DOWEL SIZES AND SPACINGS		
	DIAMETER (IN)	LENGTH (IN)	SPACING (IN)
4 1/2	1/2	18	12
5	1/2	18	12
6	3/4	18	12
7	1	18	12

NOTES:

1. STEEL TO MEET ASTM STANDARD SPECIFICATIONS FOR CONCRETE REINFORCING BARS.
2. EXPANSION JOINT TO BE PLACED AT THE END OF EACH CURB RADIUS AND SPACED AT A MAXIMUM DISTANCE OF 3 FEET MAXIMUM SPACING FOR CONTROL JOINTS SHALL BE 5 FEET.
3. CENTER DOWEL HORIZONTALLY ON JOINT.
4. CENTER DOWEL VERTICALLY IN CONCRETE AS NEEDED TO MAINTAIN A 2 INCH MINIMUM COVER.

CITY OF HOUSTON
HOUSTON PUBLIC WORKS STANDARD

SIDEWALK EXPANSION AND CONSTRUCTION JOINT DETAILS

(SCALE: NOT TO SCALE)

APPROVED BY:

DocuSigned by: Sukul Tanwar — CITY ENGINEER
DocuSigned by: KHANG NGUYEN — CITY TRAFFIC ENGINEER
DocuSigned by: Carl Haddock — DIRECTOR OF HPW

EFF DATE: NOV-27-2023 | DWG NO: 02752-02

A TETRA TECH COMPANY
Texas PE Firm Reg. #F-929
575 N. Dairy Ashford, Suite 700, Houston, Texas 77079
T +1 281 589 7257
E usinfrastructure@rpsgroup.com

SURVEYED BY: KUO Inc.
FB NO. F-4578

This document is released for the purposes of interim review only under the authority of:

Jeremy Austin, P.E.
Texas P.E. No. 116816
03/30/2026

It is not to be used for bidding, construction, or permitting purposes.

CITY OF HOUSTON
HOUSTON PUBLIC WORKS

RECONSTRUCTION & REHABILITATION
COH LIFT STATIONS

PAVEMENT DETAILS
(SHEET 2 OF 11)
STD-C-9

WBS NUMBER	FOR CITY OF HOUSTON USE ONLY
R-000267-0178-3	
DRAWING SCALE	
AS NOTED	
CITY OF HOUSTON PM	
TAHA LOTIA	
SHEET NO. 19 OF 268	

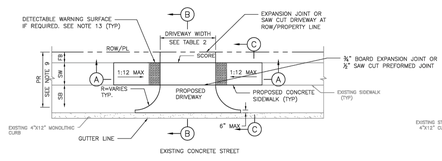

PLAN VIEW
DRIVEWAY

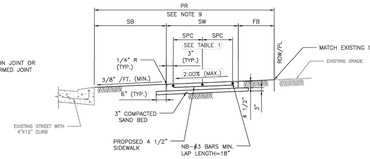

SECTION C–C
TYPICAL SIDEWALK SECTION

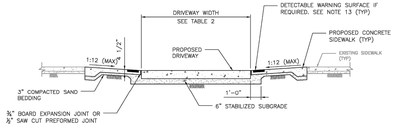

SECTION A–A
PROPOSED SIDEWALK THROUGH DRIVEWAY WITH EXCESSIVE GRADES

TABLE 1

REINFORCING STEEL INFORMATION
FOR 4 ½ " THICK SIDEWALKS
EXPANSION JOINT SPACING = 40 FT
f'c' = 3,500 PSI AND fy = 60,000 PSI
REFER TO CONTRACT DRAWINGS FOR SIDEWALKS WIDER THAN 6 FEET.

SIDEWALK THICKNESS (IN)	SIDEWALK WIDTH (FT)	LONGITUDINAL STEEL			TRANSVERSE STEEL #3 BARS SPACING (IN)
		#3 BARS			
		NO. OF BARS "NB"	SPACING "SPC" (IN)	END BAR SPACING (IN)	
4.5	5	3	27	3	48
4.5	6	4	22	3	48

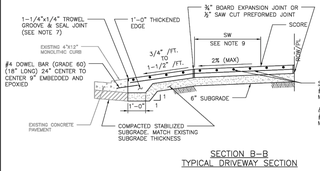

SECTION B–B
TYPICAL DRIVEWAY SECTION

TABLE 2

DRIVEWAY DESIGN CRITERIA (1)(2)

TRAFFIC TYPE	TYPE A DRIVEWAY (FOR SINGLE FAMILY RESIDENTIAL HOUSES OR DUPLEXES)				TYPE B DRIVEWAY (SHARED ACCESS/SHARED DRIVEWAY)				TYPE C DRIVEWAY (COMMERCIAL DRIVEWAY)			
	WIDTH (FT)		RADIUS (FT)		WIDTH (FT)		RADIUS (FT)		WIDTH (FT)		RADIUS (FT)	
	MIN	MAX	MIN	MAX	MIN	MAX	MIN	MAX	MIN	MAX	MIN	MAX
ONE-WAY	10	12	4	10	12(3)	16(5)	4(5)	10(5)	15	20	10	20
TWO-WAY	10(3)	24(4)	4	10	18(3)	24	4	10	24	35	10	20

(1) REFER TO INFRASTRUCTURE DESIGN MANUAL ARTICLE 15.2.07.C.1.F FOR DRIVEWAYS THAT REQUIRE A VEHICLE SWEPT PATH ANALYSIS.
(2) REFER TO INFRASTRUCTURE DESIGN MANUAL ARTICLES 15.2.07.C.1.G.(1) AND 15.2.07.C.1.G.(2) FOR TYPE 1 PAE AND TYPE 2 PAE REQUIREMENTS.
(3) THE MINIMUM WIDTH FOR JOINT ACCESS DRIVEWAY IS 12 FT.
(4) REFER TO CHAPTER 42 OF THE CODE OF ORDINANCES FOR DRIVEWAY WIDTHS FOR NARROW LOTS.
(5) ONLY MURS AND COURTYARD STYLE DEVELOPMENTS ON CORNER LOTS CAN HAVE ONE-WAY DRIVEWAYS.
(6) REFER TO CHAPTER 42, SECTION 42-146 OF THE CODE OF ORDINANCES FOR EXCEPTIONS TO THE MINIMUM DRIVEWAY WIDTH FOR SHARED DRIVEWAYS.

NOTES:

1. REPAIR, RECONSTRUCTION OR REPLACEMENT OF SIDEWALKS SHALL MEET PERMITTING REQUIREMENTS OF CODE OF ORDINANCES SECTION 40-552.
2. FOR REPAIR, RECONSTRUCTION, OR REPLACEMENT OF EXISTING SIDEWALKS:
   - 2.1. EXISTING SIDEWALKS LESS THAN OR EQUAL TO 20 FEET IN TOTAL LENGTH:
     - 2.1.1. THE PROPOSED SIDEWALK WIDTH WILL BE ALLOWED TO MATCH THE EXISTING SIDEWALK.
   - 2.2. EXISTING SIDEWALKS GREATER THAN 20 FEET IN TOTAL LENGTH:
     - 2.2.1. THE SIDEWALK WIDTH FOR THE ENTIRE PROPERTY WIDTH SHALL BE IMPROVED TO MEET WIDTH REQUIREMENTS ACCORDING TO THE LATEST INFRASTRUCTURE DESIGN MANUAL.
   - 2.3. 20 FOOT TOTAL LENGTH IS DEFINED AS:
     - 2.3.1. UP TO 10 FEET ON BOTH SIDES OF THE DRIVEWAY; OR
     - 2.3.2. UP TO 20 FEET WHEN SIDEWALK AFFECTED IS LOCATED ONLY ON ONE SIDE OF THE DRIVEWAY.
3. IF AVAILABLE ROW IS NOT SUFFICIENT TO ACCOMMODATE DRIVEWAY WIDTH IN ACCORDING TO IDM REQUIREMENTS, ENGINEER SHALL OBTAIN A VARIANCE FROM THE CITY ENGINEER.
4. DRIVEWAYS SHALL BE 6" THICK FOR SINGLE FAMILY OR DUPLEXES.
5. DRIVEWAYS AND SIDEWALKS SHALL BE CONSTRUCTED WITH PORTLAND CEMENT CONCRETE AND INCLUDE 5 1/2 SACKS OF CEMENT PER CUBIC YARD OF CONCRETE.
6. THE OUTER DOWEL BARS ARE TO BE LOCATED 12" FROM END OF PROPOSED EDGE OF DRIVEWAY RETURN; EXTEND DOWEL 3" INCHES INTO PROPOSED DRIVEWAY AND BEND REMAINING BAR TO EXTEND TO RADIUS RETURN BOTH SIDES.
7. TROWEL GROOVE SEALANT SHALL BE LOW MODULUS SILICONE OR POLYURETHANE SEALANT.
8. ALL JOINTS ALONG THE SIDEWALK SHALL BE CONSTRUCTED ACCORDING TO DRAWING 02752-02 AND SPECIFICATION 02752.
9. REFER TO CONTRACT DRAWINGS FOR PEDESTRIAN REALM (PR), SIDEWALK (SW), FRONTAGE BUFFER (FB), AND SAFETY BUFFER (SB) WIDTHS.
10. CEMENT STABILIZED SAND 1.5 SACKS OF CEMENT PER TON OF DRY SAND.
11. ALL RAMPS AND SIDEWALKS/WALKWAYS SHALL BE CONSTRUCTED IN ACCORDANCE WITH HOUSTON PUBLIC WORKS STANDARDS, TEXAS ACCESSIBILITY STANDARDS (TAS) AND AMERICANS WITH DISABILITIES ACT (ADA) REQUIREMENTS. IF THERE IS A CONFLICT IN THE REQUIREMENTS, THE STRICTEST REQUIREMENTS SHALL GOVERN.
12. CURB RAMPS THAT ARE STEEPER THAN A 1:12 MAX SLOPE WILL NOT BE ACCEPTED BY THE CITY OF HOUSTON.
13. DETECTABLE WARNING SURFACES:
    - 13.1. SIDEWALK SHALL HAVE A DETECTABLE WARNING SURFACE WHERE:
      - 13.1.1. SIDEWALK INTERSECTS TYPE C DRIVEWAYS (COMMERCIAL DRIVEWAYS) THAT ARE STOP, YIELD OR TRAFFIC SIGNAL CONTROLLED; OR
      - 13.1.2. SIDEWALK SLOPE IS GREATER THAN 1:20 AND INTERSECTS A TYPE C DRIVEWAY (COMMERCIAL DRIVEWAY)
    - 13.2. DETECTABLE WARNING SURFACES ARE OPTIONAL WHERE SIDEWALKS INTERSECT TYPE A DRIVEWAYS (SINGLE FAMILY RESIDENTIAL HOUSES OR DUPLEXES) OR TYPE B DRIVEWAYS (SHARED ACCESS/SHARED DRIVEWAYS).
    - 13.3. REFER TO STANDARD DETAILS 02775-06 TO 02775-07 FOR DETECTABLE WARNING SURFACE STANDARDS.

APPROVED BY:	APPROVED BY:
Signed/Sealed by: Sohail Faruqui	Signed/Sealed by: HANNAH HATHEWAY
CITY ENGINEER	CITY TRAFFIC ENGINEER
APPROVED BY: Signed/Sealed by: Carol Haddock	
DIRECTOR OF HOUSTON PUBLIC WORKS	
EFF DATE: NOV-27-2023	DWG NO: 02754-01A

CITY OF HOUSTON
HOUSTON PUBLIC WORKS STANDARD

DRIVEWAY DETAIL WITH 4"x12" CURB FOR LOCAL RESIDENTIAL STREETS

FOR CITY OF HOUSTON USE ONLY

DRAWING SCALE
NOT TO SCALE

DISCLAIMER:
THE USE OF THIS STANDARD IS GOVERNED BY THE TEXAS ENGINEERING PRACTICE ACT. THE DESIGN REQUIREMENTS ON THIS STANDARD DO NOT PURPORT TO ADDRESS ALL OF THE SAFETY CONDITIONS ASSOCIATED WITH USE OF THE STANDARD. IT IS THE RESPONSIBILITY OF THE ENGINEER OF RECORD (EOR) TO REVIEW THESE DESIGN REQUIREMENTS AND BY AUTHORIZING THEIR USE, ACCEPTS RESPONSIBILITY FOR FIELD APPLICABILITY, ADEQUACY AND SAFETY. NO WARRANTY OF ANY KIND IS MADE BY THE CITY OF HOUSTON OR ANY AUTHORIZED REPRESENTATIVE. THE CITY OF HOUSTON ASSUMES NO RESPONSIBILITY FOR INCORRECT RESULTS OR DAMAGES RESULTING FROM ITS USE.

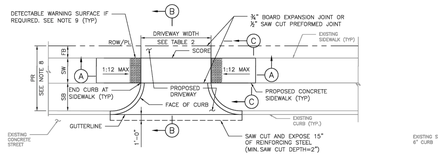

PLAN VIEW
DRIVEWAY

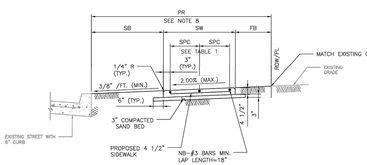

SECTION C–C
TYPICAL SIDEWALK SECTION

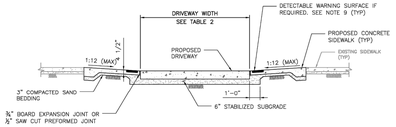

SECTION A–A
PROPOSED SIDEWALK THROUGH DRIVEWAY WITH EXCESSIVE ELEVATION DIFFERENCE WITH EXISTING SIDEWALK

TABLE 1

REINFORCING STEEL INFORMATION
FOR 4 ½ " THICK SIDEWALKS
EXPANSION JOINT SPACING = 40 FT
f'c' = 3,500 PSI AND fy = 60,000 PSI
REFER TO CONTRACT DRAWINGS FOR SIDEWALKS WIDER THAN 6 FEET.

SIDEWALK THICKNESS (IN)	SIDEWALK WIDTH (FT)	LONGITUDINAL STEEL			TRANSVERSE STEEL #3 BARS SPACING (IN)
		#3 BARS			
		NO. OF BARS "NB"	SPACING "SPC" (IN)	END BAR SPACING (IN)	
4.5	5	3	27	3	48
4.5	6	4	22	3	48

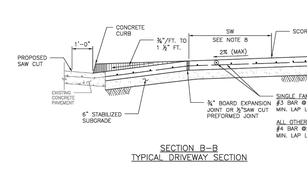

SECTION B–B
TYPICAL DRIVEWAY SECTION

TABLE 2

DRIVEWAY DESIGN CRITERIA (1)(2)

TRAFFIC TYPE	TYPE A DRIVEWAY (FOR SINGLE FAMILY RESIDENTIAL HOUSES OR DUPLEXES)				TYPE B DRIVEWAY (SHARED ACCESS/SHARED DRIVEWAY)				TYPE C DRIVEWAY (COMMERCIAL DRIVEWAY)			
	WIDTH (FT)		RADIUS (FT)		WIDTH (FT)		RADIUS (FT)		WIDTH (FT)		RADIUS (FT)	
	MIN	MAX	MIN	MAX	MIN	MAX	MIN	MAX	MIN	MAX	MIN	MAX
ONE-WAY	10	12	4	10	12(3)	16(5)	4(5)	10(5)	15	20	10	20
TWO-WAY	10(3)	24(4)	4	10	18(3)	24	4	10	24	35	10	20

(1) REFER TO INFRASTRUCTURE DESIGN MANUAL ARTICLE 15.2.07.C.1.F FOR DRIVEWAYS THAT REQUIRE A VEHICLE SWEPT PATH ANALYSIS.
(2) REFER TO INFRASTRUCTURE DESIGN MANUAL ARTICLES 15.2.07.C.1.G.(1) AND 15.2.07.C.1.G.(2) FOR TYPE 1 PAE AND TYPE 2 PAE REQUIREMENTS.
(3) THE MINIMUM WIDTH FOR JOINT ACCESS DRIVEWAY IS 12 FT.
(4) REFER TO CHAPTER 42 OF THE CODE OF ORDINANCES FOR DRIVEWAY WIDTHS FOR NARROW LOTS.
(5) ONLY MURS AND COURTYARD STYLE DEVELOPMENTS ON CORNER LOTS CAN HAVE ONE-WAY DRIVEWAYS.
(6) REFER TO CHAPTER 42, SECTION 42-146 OF THE CODE OF ORDINANCES FOR EXCEPTIONS TO THE MINIMUM DRIVEWAY WIDTH FOR SHARED DRIVEWAYS.

NOTES:

1. REPAIR, RECONSTRUCTION OR REPLACEMENT OF SIDEWALKS SHALL MEET PERMITTING REQUIREMENTS OF CODE OF ORDINANCES SECTION 40-552.
2. FOR REPAIR, RECONSTRUCTION, OR REPLACEMENT OF EXISTING SIDEWALKS:
   - 2.1. EXISTING SIDEWALKS LESS THAN OR EQUAL TO 20 FEET IN TOTAL LENGTH:
     - 2.1.1. THE PROPOSED SIDEWALK WIDTH WILL BE ALLOWED TO MATCH THE EXISTING SIDEWALK.
   - 2.2. EXISTING SIDEWALKS GREATER THAN 20 FEET IN TOTAL LENGTH:
     - 2.2.1. THE SIDEWALK WIDTH FOR THE ENTIRE PROPERTY WIDTH SHALL BE IMPROVED TO MEET WIDTH REQUIREMENTS ACCORDING TO THE LATEST INFRASTRUCTURE DESIGN MANUAL.
   - 2.3. 20 FOOT TOTAL LENGTH IS DEFINED AS:
     - 2.3.1. UP TO 10 FEET ON BOTH SIDES OF THE DRIVEWAY; OR
     - 2.3.2. UP TO 20 FEET WHEN SIDEWALK AFFECTED IS LOCATED ONLY ON ONE SIDE OF THE DRIVEWAY.
3. ALL JOINTS ALONG THE SIDEWALK SHALL BE CONSTRUCTED ACCORDING TO DRAWING 02752-02 AND SPECIFICATION 02752.
4. DRIVEWAYS SHALL BE MINIMUM 6" THICK FOR SINGLE FAMILY AND DUPLEXES. DRIVEWAYS SHALL BE MINIMUM 7" THICK FOR ALL OTHERS (I.E. COMMERCIAL, INDUSTRIAL, ETC.)
5. DRIVEWAYS AND SIDEWALKS SHALL BE CONSTRUCTED WITH PORTLAND CEMENT CONCRETE AND INCLUDE 5 1/2 SACKS OF CEMENT PER CUBIC YARD OF CONCRETE.
6. ALL RAMPS AND SIDEWALKS/WALKWAYS SHALL BE CONSTRUCTED IN ACCORDANCE WITH HOUSTON PUBLIC WORKS STANDARDS, TEXAS ACCESSIBILITY STANDARDS (TAS) AND AMERICANS WITH DISABILITIES ACT (ADA) REQUIREMENTS. IF THERE IS A CONFLICT IN THE REQUIREMENTS, THE STRICTEST REQUIREMENTS SHALL GOVERN.
7. CURB RAMPS THAT ARE STEEPER THAN A 1:12 MAX SLOPE WILL NOT BE ACCEPTED BY THE CITY OF HOUSTON.
8. REFER TO CONTRACT DRAWINGS FOR PEDESTRIAN REALM (PR), SIDEWALK (SW), FRONTAGE BUFFER (FB), AND SAFETY BUFFER (SB) WIDTHS.
9. DETECTABLE WARNING SURFACES:
   - 9.1. SIDEWALK SHALL HAVE A DETECTABLE WARNING SURFACE WHERE:
     - 9.1.1. SIDEWALK INTERSECTS TYPE C DRIVEWAYS (COMMERCIAL DRIVEWAYS) THAT ARE STOP, YIELD OR TRAFFIC SIGNAL CONTROLLED; OR
     - 9.1.2. SIDEWALK SLOPE IS GREATER THAN 1:20 AND INTERSECTS A TYPE C DRIVEWAY (COMMERCIAL DRIVEWAY)
   - 9.2. DETECTABLE WARNING SURFACES ARE OPTIONAL WHERE SIDEWALKS INTERSECT TYPE A DRIVEWAYS (SINGLE FAMILY RESIDENTIAL HOUSES OR DUPLEXES) OR TYPE B DRIVEWAYS (SHARED ACCESS/SHARED DRIVEWAYS).
   - 9.3. REFER TO STANDARD DETAILS 02775-06 TO 02775-07 FOR DETECTABLE WARNING SURFACE STANDARDS.

APPROVED BY:	APPROVED BY:
Signed/Sealed by: Sohail Faruqui	Signed/Sealed by: HANNAH HATHEWAY
CITY ENGINEER	CITY TRAFFIC ENGINEER
APPROVED BY: Signed/Sealed by: Carol Haddock	
DIRECTOR OF HOUSTON PUBLIC WORKS	
EFF DATE: NOV-27-2023	DWG NO: 02754-01B

CITY OF HOUSTON
HOUSTON PUBLIC WORKS STANDARD

DRIVEWAY DETAIL WITH 6" CURBED STREETS

FOR CITY OF HOUSTON USE ONLY

DRAWING SCALE
NOT TO SCALE

DISCLAIMER:
THE USE OF THIS STANDARD IS GOVERNED BY THE TEXAS ENGINEERING PRACTICE ACT. THE DESIGN REQUIREMENTS ON THIS STANDARD DO NOT PURPORT TO ADDRESS ALL OF THE SAFETY CONDITIONS ASSOCIATED WITH USE OF THE STANDARD. IT IS THE RESPONSIBILITY OF THE ENGINEER OF RECORD (EOR) TO REVIEW THESE DESIGN REQUIREMENTS AND BY AUTHORIZING THEIR USE, ACCEPTS RESPONSIBILITY FOR FIELD APPLICABILITY, ADEQUACY AND SAFETY. NO WARRANTY OF ANY KIND IS MADE BY THE CITY OF HOUSTON OR ANY AUTHORIZED REPRESENTATIVE. THE CITY OF HOUSTON ASSUMES NO RESPONSIBILITY FOR INCORRECT RESULTS OR DAMAGES RESULTING FROM ITS USE.

A TETRA TECH COMPANY
Texas PE Firm Reg. #F-929
575 N. Dairy Ashford, Suite 700,
Houston, Texas 77079
T +1 281 589 7257
E usinfrastructure@rpsgroup.com

SURVEYED BY: KUO Inc.
FB NO. F-4578

This document is released for the purposes of interim review only under the authority of:

Jeremy Austin, P.E.
Texas P.E. No. 116816
03/30/2026

It is not to be used for bidding, construction, or permitting purposes.

CITY OF HOUSTON
HOUSTON PUBLIC WORKS

RECONSTRUCTION & REHABILITATION
COH LIFT STATIONS

PAVEMENT DETAILS
(SHEET 3 OF 11)
STD–C–10

WBS NUMBER	FOR CITY OF HOUSTON USE ONLY
R-000267-0178-3	
DRAWING SCALE	
AS NOTED	
CITY OF HOUSTON PM	
TAHA LOTIA	
SHEET NO. 20 OF 268	

PLOTTED: 3/30/2026 4:32 PM
PLOT STYLE: Coh_ctb_230809.ctb
FILE NAME: PAVEMENT DETAILS (SHEET 3 OF 11).dwg

PLOTTED: 3/30/2026 4:32 PM
PLOT STYLE: CoH_ctb_230809.ctb
FILE NAME: PAVEMENT DETAILS (SHEET 4 OF 11).dwg

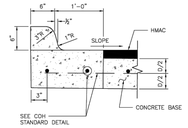

ESPLANADE CURB CONNECTED TO CONCRETE BASE

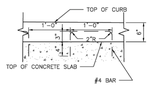

ALTERNATE CONCRETE CURB REINFORCEMENT

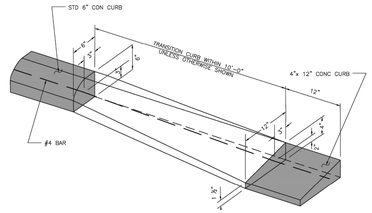

CURB TRANSITION
(SEE NOTES)

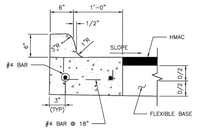

ESPLANADE CURB CONNECTED TO FLEXIBLE BASE

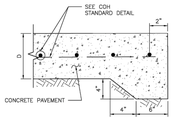

STANDARD CONCRETE PAVING HEADER

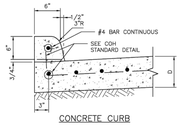

CONCRETE CURB

WHEN CONCRETE CURB IS TO BE PLACED EXISTING CONCRETE USE BASE #4 BAR @ 18x10" LONG, DOWELED AND SET IN EPOXY GROUT. SET #4 DOWEL BARS, 25" LONG AT 12" C-C WHEN PAVEMENT SECTION POURED.

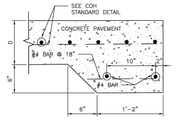

STANDARD RAILROAD HEADER

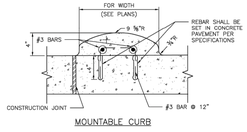

MOUNTABLE CURB

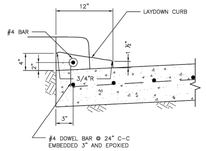

4-INCH x 12-INCH TRANSITION CURB
(SEE NOTES)

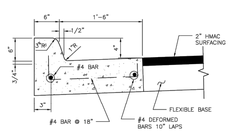

MONOLITHIC CURB AND GUTTER

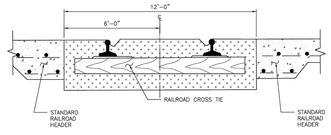

STANDARD RAILROAD CROSSING – SINGLE TRACK

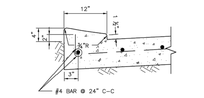

4-INCH x 12-INCH MONOLITHIC CURB
(SEE NOTES)

4"x12" MONOLITHIC AND TRANSITION CURB NOTES:

1. 6-INCH CONCRETE CURB TO BE CONSTRUCTED ON ALL ESPLANADES, ISLANDS, NON-RESIDENTIAL STREETS, AND RESIDENTIAL STREETS.
2. TRANSITIONS FROM 6- INCH CONCRETE CURB TO 4-INCH x 12-INCH CONCRETE CURB TO BE ACCOMPLISHED WITHIN 10 FEET, UNLESS OTHERWISE SHOWN. IF THIS 10-FEET TRANSITION CURB IS NOT POURED MONOLITHICALLY WITH THE PAVEMENT, THEN REINFORCING STEEL AS SHOWN IN "4-INCH x 12-INCH TRANSITION CURB" IS TO BE INSTALLED.

APPROVED BY: (Developed by: Suhail Kanwar)	APPROVED BY: (Developed by: HANG NGUYEN)
CITY ENGINEER	CITY TRAFFIC ENGINEER
APPROVED BY: (for Interim Director) Carol Haddock	
DIRECTOR OF HOUSTON PUBLIC WORKS	
EFF DATE: NOV-27-2023	DWG NO: 02771-01

CITY OF HOUSTON
HOUSTON PUBLIC WORKS STANDARD

CURB, CURB AND GUTTER AND HEADER DETAILS

FOR CITY OF HOUSTON USE ONLY
DRAWING SCALE
NOT TO SCALE

DISCLAIMER:
THE USE OF THIS STANDARD IS GOVERNED BY THE TEXAS ENGINEERING PRACTICE ACT. THE DESIGN REQUIREMENTS ON THIS STANDARD DO NOT PURPORT TO ADDRESS ALL OF THE SAFETY CONCERNS ASSOCIATED WITH THEIR USE. THE ENGINEER OF RECORD (EOR) IS TO REVIEW THESE DESIGN REQUIREMENTS AND BY AUTHORIZING THEIR USE, ACCEPTS RESPONSIBILITY FOR THEIR APPLICABILITY, ADEQUACY AND SAFETY. NO WARRANTY OF ANY KIND IS MADE BY THE CITY OF HOUSTON FOR ANY PURPOSES WHATSOEVER. THE CITY OF HOUSTON ASSUMES NO RESPONSIBILITY FOR INCORRECT RESULTS OR DAMAGES RESULTING FROM ITS USE.

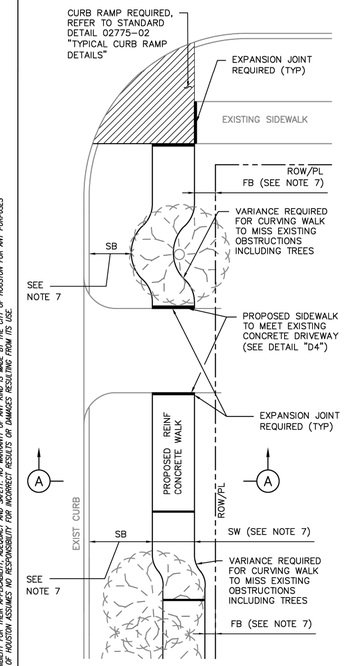

PLAN VIEW

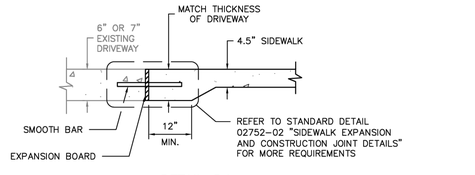

DETAIL D4
DRIVEWAY/SIDEWALK HEADER

TABLE 1

REINFORCING STEEL INFORMATION
FOR 4 ½ " THICK SIDEWALKS
EXPANSION JOINT SPACING = 40 FT
f_c' = 3,500 PSI AND f_y = 60,000 PSI
REFER TO CONTRACT DRAWINGS FOR SIDEWALKS WIDER THAN 6 FEET.

SIDEWALK THICKNESS (IN)	SIDEWALK WIDTH (FT)	LONGITUDINAL STEEL #3 BARS NO. OF BARS	LONGITUDINAL STEEL #3 BARS SPACING (IN)	LONGITUDINAL STEEL #3 BARS END BAR SPACING (IN)	TRANSVERSE STEEL #3 BARS SPACING (IN)
4.5	5	3	27	3	48
4.5	6	4	22	3	48

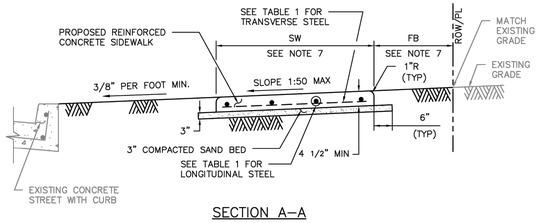

SECTION A–A

NOTES:

1. 6X6 – W2.9XW2.9 WELDED WIRE FABRIC MAY BE USED IN LIEU OF THE REINFORCING STEEL GIVEN IN TABLE 1.
2. REINFORCED CONCRETE SIDEWALKS THRU DRIVEWAYS OPENINGS SHALL BE EITHER 6" THICK OR 7" THICK AS SPECIFIED ON 6" STABILIZED SUBGRADE. FOR THE REINFORCING STEEL REQUIREMENTS, SEE CITY OF HOUSTON STANDARD DETAILS 02754-01A, 02754-01B, 02754-03, AND 02754-04.
3. MAXIMUM SPACING FOR EXPANSION JOINTS SHALL BE 40 FEET.
4. CONTRACTOR SHALL CONSTRUCT SIDEWALK IN A MANNER NOT TO BLOCK THE NATURAL DRAINAGE FROM ADJACENT PROPERTY.
5. ALL RAMPS AND SIDEWALKS/WALKWAYS SHALL BE CONSTRUCTED IN ACCORDANCE WITH HOUSTON PUBLIC WORKS STANDARDS, TEXAS ACCESSIBILITY STANDARDS (TAS) AND AMERICANS WITH DISABILITIES ACT (ADA) REQUIREMENTS. IF THERE IS A CONFLICT IN THE REQUIREMENTS, THE STRICTEST REQUIREMENTS SHALL GOVERN.
6. CURB RAMPS THAT ARE STEEPER THAN A 1:12 MAX SLOPE WILL NOT BE ACCEPTED BY THE CITY OF HOUSTON UNLESS NOTED OTHERWISE.
7. REFER TO CONTRACT DRAWINGS FOR SIDEWALK (SW), FRONTAGE BUFFER (FB), AND SAFETY BUFFER (SB) WIDTHS.

CITY OF HOUSTON
HOUSTON PUBLIC WORKS STANDARD

TYPICAL SIDEWALK LAYOUT AND DETAILS FOR STREETS WITH CURBS
(SCALE: NOT TO SCALE)

APPROVED BY:	
(DocuSigned by: Suhail Kanwar) CITY ENGINEER	(DocuSigned by: Carol Haddock) DIRECTOR OF HPW
(DocuSigned by: HANG NGUYEN) CITY TRAFFIC ENGINEER	
EFF DATE: NOV-27-2023	DWG NO: 02775-01

RPS A TETRA TECH COMPANY
Texas PE Firm Reg. #F-929
575 N. Dairy Ashford, Suite 700, Houston, Texas 77079
T +1 281 589 7257
E usinfrastructure@rpsgroup.com

SURVEYED BY: KUO Inc.
FB NO. F-4578

This document is released for the purposes of interim review only under the authority of:

Jeremy Austin, P.E.
Texas P.E. No. 116816
03/30/2026

It is not to be used for bidding, construction, or permitting purposes.

CITY OF HOUSTON
HOUSTON PUBLIC WORKS

RECONSTRUCTION & REHABILITATION
COH LIFT STATIONS

PAVEMENT DETAILS
(SHEET 4 OF 11)
STD-C-11

WBS NUMBER	FOR CITY OF HOUSTON USE ONLY
R-000267-0178-3	
DRAWING SCALE	
AS NOTED	
CITY OF HOUSTON PM	
TAHA LOTIA	
SHEET NO. 21 OF 268	

DISCLAIMER:
THE USE OF THIS STANDARD IS GOVERNED BY THE TEXAS ENGINEERING PRACTICE ACT. THE DESIGN REQUIREMENTS ON THIS STANDARD DO NOT PURPORT TO ADDRESS ALL OF THE SAFETY CONCERNS ASSOCIATED WITH THE USE OF SAME. CONCERNS THAT THE ENGINEER RECOGNIZES BUT ARE NOT ADDRESSED BY THE DESIGN REQUIREMENTS ON THIS STANDARD SHOULD BE ADDRESSED BY THE ENGINEER IN THE DESIGN. IN ADDITION, THE ENGINEER IS TO NOTIFY THE CITY OF HOUSTON IF ANY DESIGN REQUIREMENTS ON THIS STANDARD ARE DEEMED TO BE UNSAFE. ALL OF THE SAFETY CONCERNS ASSOCIATED WITH THE USE OF THIS STANDARD SHALL BE BORNE BY THE ENGINEER AND BY AUTHORIZING THEIR USE, THE CITY OF HOUSTON DOES NOT ASSUME ANY RESPONSIBILITY FOR ACCIDENTS OR INJURIES OF ANY NATURE WHATSOEVER THAT MAY OCCUR DUE TO THE USE OF THIS STANDARD. IN ADDITION, THE ENGINEER IS RESPONSIBLE FOR THE PROPER INTERFACE OF ALL APPURTENANCES SHOWN HEREON WITH THE SURROUNDING CONSTRUCTION. THE CITY OF HOUSTON ASSUMES NO RESPONSIBILITY FOR INCORRECT RESULTS OR DAMAGES RESULTING FROM ITS USE.

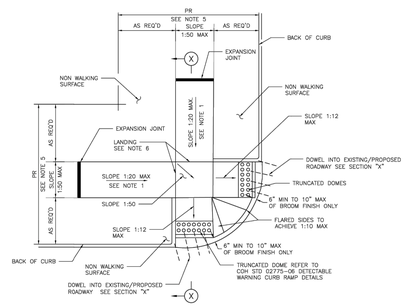

STREETS WITH NON– WALKING SURFACE BEHIND CURB
SEE NOTE–7

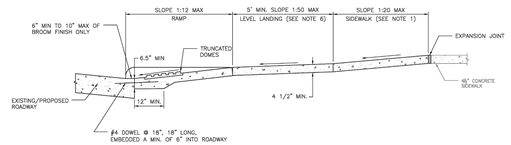

SECTION X–X

NOTES:

1. REPLACE EXISTING SIDEWALK FROM LEVEL LANDING AS NECESSARY TO ACHIEVE 1:20 SLOPE
2. BROOM FINISH IS MEASURED FROM FACE OF CURB.
3. ALL RAMPS AND SIDEWALKS/WALKWAYS SHALL BE CONSTRUCTED IN ACCORDANCE WITH HOUSTON PUBLIC WORKS STANDARDS, TEXAS ACCESSIBILITY STANDARDS (TAS) AND AMERICANS WITH DISABILITIES ACT (ADA) REQUIREMENTS. IF THERE IS A CONFLICT IN THE REQUIREMENTS, THE STRICTEST REQUIREMENTS SHALL GOVERN.
4. CURB RAMPS THAT ARE STEEPER THAN A 1:12 MAX SLOPE WILL NOT BE ACCEPTED BY THE CITY OF HOUSTON UNLESS NOTED OTHERWISE.
5. REFER TO CONTRACT DRAWINGS FOR PEDESTRIAN REALM (PR) WIDTH.
6. MINIMUM 5'x5' LANDING PAD ACCORDING TO ADA REQUIREMENTS. WHEN THE APPROACHING SIDEWALK IS WIDER THAN 5', THE LANDING PAD AND RAMP WIDTH MUST MATCH THE SIDEWALK WIDTH.
7. FOR STREETS WITH WALKABLE SURFACES IMMEDIATELY BEHIND THE CURB A FLARE IS REQUIRED ON BOTH SIDES OF THE RAMP.

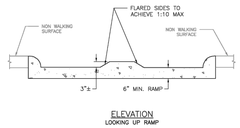

ELEVATION
LOOKING UP RAMP

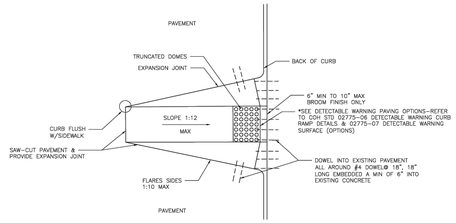

CURB RAMP CONSTRUCTION FOR EXISTING PAVEMENT

APPROVED BY:	APPROVED BY:
Salud Iravani	Hang Nguyen
CITY ENGINEER	CITY TRAFFIC ENGINEER
APPROVED BY: Carl Haddock	
DIRECTOR OF HOUSTON PUBLIC WORKS	
EFF DATE: NOV–27–2023	DWG NO: 02775–02

CITY OF HOUSTON
HOUSTON PUBLIC WORKS STANDARD

TYPICAL CURB RAMP DETAILS

	FOR CITY OF HOUSTON USE ONLY
DRAWING SCALE	
NOT TO SCALE	

DISCLAIMER:
THE USE OF THIS STANDARD IS GOVERNED BY THE TEXAS ENGINEERING PRACTICE ACT. THE DESIGN REQUIREMENTS ON THIS STANDARD DO NOT PURPORT TO ADDRESS ALL OF THE SAFETY CONCERNS ASSOCIATED WITH THE USE OF SAME. CONCERNS THAT THE ENGINEER RECOGNIZES BUT ARE NOT ADDRESSED BY THE DESIGN REQUIREMENTS ON THIS STANDARD SHOULD BE ADDRESSED BY THE ENGINEER IN THE DESIGN. IN ADDITION, THE ENGINEER IS TO NOTIFY THE CITY OF HOUSTON IF ANY DESIGN REQUIREMENTS ON THIS STANDARD ARE DEEMED TO BE UNSAFE. ALL OF THE SAFETY CONCERNS ASSOCIATED WITH THE USE OF THIS STANDARD SHALL BE BORNE BY THE ENGINEER AND BY AUTHORIZING THEIR USE, THE CITY OF HOUSTON DOES NOT ASSUME ANY RESPONSIBILITY FOR ACCIDENTS OR INJURIES OF ANY NATURE WHATSOEVER. THE CITY OF HOUSTON ASSUMES NO RESPONSIBILITY FOR INCORRECT RESULTS OR DAMAGES RESULTING FROM ITS USE.

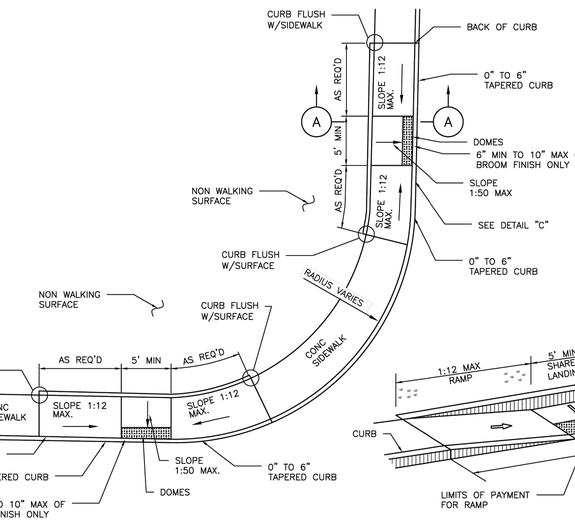

SIDEWALK ON BACK OF CURB

NOTES:

1. ALL RAMPS AND SIDEWALKS/WALKWAYS SHALL BE CONSTRUCTED IN ACCORDANCE WITH HOUSTON PUBLIC WORKS STANDARDS, TEXAS ACCESSIBILITY STANDARDS (TAS) AND AMERICANS WITH DISABILITIES ACT (ADA) REQUIREMENTS. IF THERE IS A CONFLICT IN THE REQUIREMENTS, THE STRICTEST REQUIREMENTS SHALL GOVERN.
2. CURB RAMPS THAT ARE STEEPER THAN A 1:12 MAX SLOPE WILL NOT BE ACCEPTED BY THE CITY OF HOUSTON.
3. REFER TO CONTRACT DRAWINGS FOR S–DIMENSION (S), SIDEWALK (SW), FRONTAGE BUFFER (FB), AND SAFETY BUFFER (SB) WIDTHS.

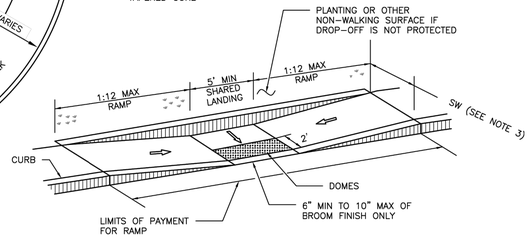

DETAIL "C"

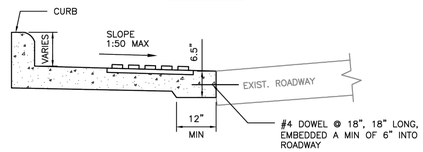

SECTION A–A

CITY OF HOUSTON
HOUSTON PUBLIC WORKS STANDARD

PARALLEL CURB RAMP

(SCALE: NOT TO SCALE)

APPROVED BY:	
Salud Iravani — CITY ENGINEER	Carl Haddock — DIRECTOR OF HPW
Hang Nguyen — CITY TRAFFIC ENGINEER	
EFF DATE: NOV–27–2023	DWG NO: 02775–03

RPS — A TETRA TECH COMPANY
Texas PE Firm Reg. #F–929
575 N. Dairy Ashford, Suite 700, Houston, Texas 77079
T +1 281 589 7257
E usinfrastructure@rpsgroup.com

SURVEYED BY: KUO Inc.
FB NO. F–4578

This document is released for the purposes of interim review only under the authority of:

Jeremy Austin, P.E.
Texas P.E. No. 116816
03/30/2026

It is not to be used for bidding, construction, or permitting purposes.

CITY OF HOUSTON
HOUSTON PUBLIC WORKS

RECONSTRUCTION & REHABILITATION
COH LIFT STATIONS

PAVEMENT DETAILS
(SHEET 5 OF 11)
STD–C–12

WBS NUMBER	FOR CITY OF HOUSTON USE ONLY
R–000267–0178–3	
DRAWING SCALE	
AS NOTED	
CITY OF HOUSTON PM	
TAHA LOTIA	
SHEET NO. 22 OF 268	

PLOTTED: 3/30/2026 4:32 PM
PLOT STYLE: Coh_ctb_230809.ctb
FILE NAME: PAVEMENT DETAILS (SHEET 5 OF 11).dwg

DISCLAIMER:
THE USE OF THIS STANDARD IS GOVERNED BY THE TEXAS ENGINEERING PRACTICE ACT. THE DESIGN REQUIREMENTS ON THIS STANDARD DO NOT PURPORT TO ADDRESS ALL OF THE SAFETY CONCERNS ASSOCIATED WITH ITS USE. THE ENGINEER OF RECORD (EOR) IS TO REVIEW THESE DESIGN REQUIREMENTS AND BY AUTHORIZING THEIR USE, ACCEPTS RESPONSIBILITY FOR THEIR APPLICABILITY, ADEQUACY AND SAFETY. NO WARRANTY OF ANY KIND IS MADE BY THE CITY OF HOUSTON FOR ANY PURPOSES WHATSOEVER. THE CITY OF HOUSTON ASSUMES NO RESPONSIBILITY FOR INCORRECT RESULTS OR DAMAGES RESULTING FROM ITS USE.

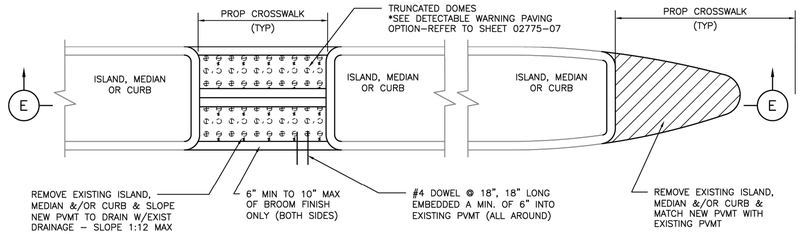

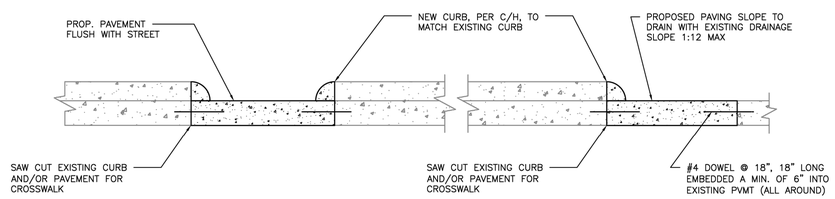

SECTION E–E
FOR ISLAND, MEDIAN, OR CURB MODIFICATIONS FOR CROSSWALKS

NOTES:

1. SEE COH STANDARD DETAIL FOR PAVEMENT MARKING DETAILS.
2. ALL RAMPS AND SIDEWALKS/WALKWAYS SHALL BE CONSTRUCTED IN ACCORDANCE WITH HOUSTON PUBLIC WORKS STANDARDS, TEXAS ACCESSIBILITY STANDARDS (TAS) AND AMERICANS WITH DISABILITIES ACT (ADA) REQUIREMENTS. IF THERE IS A CONFLICT IN THE REQUIREMENTS, THE STRICTEST REQUIREMENTS SHALL GOVERN.
3. CURB RAMPS THAT ARE STEEPER THAN A 1:12 MAX SLOPE WILL NOT BE ACCEPTED BY THE CITY OF HOUSTON.

CITY OF HOUSTON
HOUSTON PUBLIC WORKS STANDARD

CURB MODIFICATION FOR CURB RAMPS & CROSSWALKS

(SCALE: NOT TO SCALE)

APPROVED BY:

DocuSigned by: Sulaiman Kauwar — CITY ENGINEER
DocuSigned by: HANG NGUYEN — CITY TRAFFIC ENGINEER
DocuSigned by: Carol Haddock — DIRECTOR OF HPW

EFF DATE: NOV–27–2023 | DWG NO: 02775–04

DISCLAIMER:
THE USE OF THIS STANDARD IS GOVERNED BY THE TEXAS ENGINEERING PRACTICE ACT. THE DESIGN REQUIREMENTS ON THIS STANDARD DO NOT PURPORT TO ADDRESS ALL OF THE SAFETY CONCERNS ASSOCIATED WITH ITS USE. THE ENGINEER OF RECORD (EOR) IS TO REVIEW THESE DESIGN REQUIREMENTS AND BY AUTHORIZING THEIR USE, ACCEPTS RESPONSIBILITY FOR THEIR APPLICABILITY, ADEQUACY AND SAFETY. NO WARRANTY OF ANY KIND IS MADE BY THE CITY OF HOUSTON FOR ANY PURPOSES WHATSOEVER. THE CITY OF HOUSTON ASSUMES NO RESPONSIBILITY FOR INCORRECT RESULTS OR DAMAGES RESULTING FROM ITS USE.

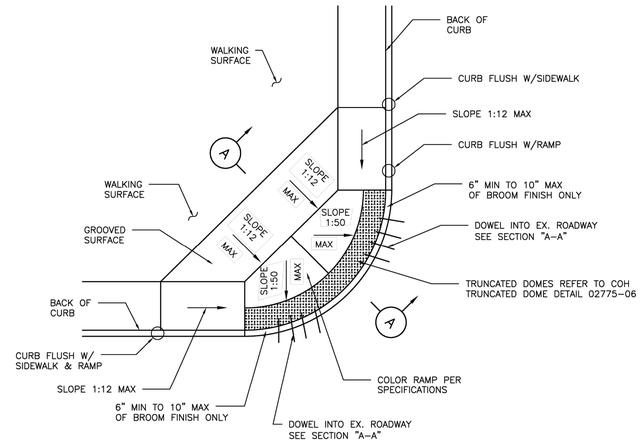

PLAN

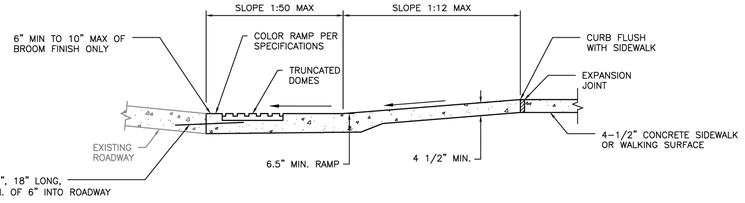

SECTION A–A

NOTES:

1. ALL RAMPS AND SIDEWALKS/WALKWAYS SHALL BE CONSTRUCTED IN ACCORDANCE WITH HOUSTON PUBLIC WORKS STANDARDS, TEXAS ACCESSIBILITY STANDARDS (TAS) AND AMERICANS WITH DISABILITIES ACT (ADA) REQUIREMENTS. IF THERE IS A CONFLICT IN THE REQUIREMENTS, THE STRICTEST REQUIREMENTS SHALL GOVERN.
2. CURB RAMPS THAT ARE STEEPER THAN A 1:12 MAX SLOPE WILL NOT BE ACCEPTED BY THE CITY OF HOUSTON.
3. THIS STANDARD DETAIL SHALL BE USED ONLY IF THE ROADWAY GEOMETRIC DOESN'T ALLOW STANDARD DETAILS 02775–02, 02775–03, AND 02775–09 TO BE USED.
4. THIS STANDARD DETAIL SHALL NOT BE USED IN LIEU OF STANDARD DETAILS 02775–02, 02775–03, AND 02775–09 UNLESS APPROVED BY THE CITY.

CITY OF HOUSTON
HOUSTON PUBLIC WORKS STANDARD

COMMERCIAL & HIGH DENSITY CONDITIONS CURB RAMP DETAILS

(SCALE: NOT TO SCALE)

APPROVED BY:

DocuSigned by: Sulaiman Kauwar — CITY ENGINEER
DocuSigned by: HANG NGUYEN — CITY TRAFFIC ENGINEER
DocuSigned by: Carol Haddock — DIRECTOR OF HPW

EFF DATE: NOV–27–2023 | DWG NO: 02775–05

A TETRA TECH COMPANY
Texas PE Firm Reg. #F-929
575 N. Dairy Ashford, Suite 700,
Houston, Texas 77079
T +1 281 589 7257
E usinfrastructure@rpsgroup.com

SURVEYED BY: KUO Inc.
FB NO. F–4578

This document is released for the purposes of interim review only under the authority of:

Jeremy Austin, P.E.
Texas P.E. No. 116816
03/30/2026

It is not to be used for bidding, construction, or permitting purposes.

CITY OF HOUSTON
HOUSTON PUBLIC WORKS

RECONSTRUCTION & REHABILITATION
COH LIFT STATIONS

PAVEMENT DETAILS
(SHEET 6 OF 11)
STD–C–13

WBS NUMBER	FOR CITY OF HOUSTON USE ONLY
R–000267–0178–3	
DRAWING SCALE	
AS NOTED	
CITY OF HOUSTON PM	
TAHA LOTIA	
SHEET NO. 23 OF 268	

PLOTTED: 3/30/2026 4:32 PM
PLOT STYLE: Coh_ctb_230809.ctb
FILE NAME: PAVEMENT DETAILS (SHEET 6 OF 11).dwg

DISCLAIMER:
THE USE OF THIS STANDARD IS GOVERNED BY THE TEXAS ENGINEERING PRACTICE ACT. THE DESIGN REQUIREMENTS ON THIS STANDARD DO NOT PURPORT TO ADDRESS ALL OF THE SAFETY CONCERNS ASSOCIATED WITH THEIR USE. THE ENGINEER OF RECORD (EOR) IS TO REVIEW THOSE DESIGN REQUIREMENTS AND BY AUTHORIZING THEIR USE, ACCEPTS RESPONSIBILITY FOR THEIR APPLICABILITY, ADEQUACY AND SAFETY. NO WARRANTY OF ANY KIND IS MADE BY THE CITY OF HOUSTON FOR ANY PURPOSES WHATSOEVER. THE CITY OF HOUSTON ASSUMES NO RESPONSIBILITY FOR INCORRECT RESULTS OR DAMAGES RESULTING FROM ITS USE.

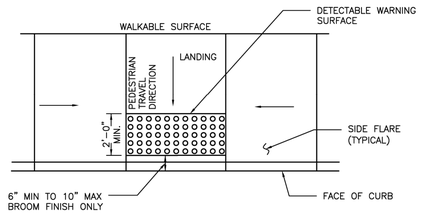

TYPICAL PLACEMENT OF DETECTABLE WARNING SURFACE ON LANDING AT STREET EDGE

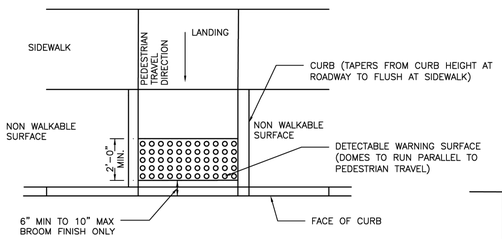

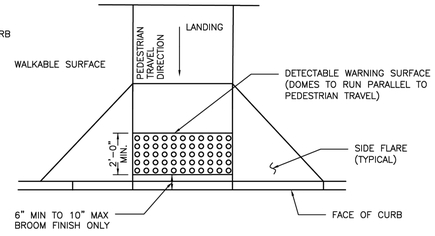

TYPICAL PLACEMENT OF DETECTABLE WARNING SURFACE ON SLOPING RAMP RUN

GENERAL NOTES FOR DETECTABLE WARNINGS:

1. DETECTABLE WARNING SURFACES MUST BE FULLY ADA COMPLIANT.
2. ALL NEW CURB RAMPS MUST CONTAIN A DETECTABLE WARNING SURFACE THAT CONSISTS OF RAISED TRUNCATED DOMES. THE SURFACE MUST CONTRAST VISUALLY WITH ADJOINING SURFACE, INCLUDING SIDE FLARES. FURNISH DARK BROWN OR DARK RED DETECTABLE WARNING SURFACE ADJACENT TO UNCOLORED CONCRETE, UNLESS SPECIFIED ELSEWHERE IN THE PLANS.
3. DETECTABLE WARNING SURFACES MUST MAINTAIN A SLIP RESISTANCE WITH FA-VALUE OF EQUAL TO OR GREATER THAN 0.8.
4. DETECTABLE WARNING SURFACES MUST MAINTAIN A WATER ABSORPTION RATE OF LESS THAN 1%, DETECTABLE WARNING SHALL NOT ALLOW WATER TO ACCUMULATE.
5. DETECTABLE WARNINGS INSTALLED INTO FRESH CONCRETE SHALL BE WITHOUT VOIDS AND UTILIZING AN ACCEPTABLE ANCHORING SYSTEM.
6. ALIGN TRUNCATED DOMES IN THE DIRECTION OF PEDESTRIAN TRAVEL WHEN ENTERING THE STREET.
7. DETECTABLE WARNING SURFACES SHALL BE A MINIMUM OF 24" IN DEPTH IN THE DIRECTION OF PEDESTRIAN TRAVEL, AND EXTEND THE FULL WIDTH OF THE CURB RAMP OR LANDING WHERE THE PEDESTRIAN ACCESS ROUTE ENTERS THE STREET.
8. DETECTABLE WARNING SURFACES SHALL BE LOCATED SO THAT THE EDGE NEAREST THE CURB LINE IS 6" MIN TO 10" MAX FROM THE DETECTABLE WARNING SURFACES MAY BE CURVED ALONG THE CORNER RADIUS.
9. ALL RAMPS AND SIDEWALKS/WALKWAYS SHALL BE CONSTRUCTED IN ACCORDANCE WITH HOUSTON PUBLIC WORKS STANDARDS, TEXAS ACCESSIBILITY STANDARDS (TAS) AND AMERICANS WITH DISABILITIES ACT (ADA) REQUIREMENTS. IF THERE IS A CONFLICT IN THE REQUIREMENTS, THE STRICTEST REQUIREMENTS SHALL GOVERN.
10. CURB RAMPS THAT ARE STEEPER THAN A 1:12 MAX SLOPE WILL NOT BE ACCEPTED BY THE CITY OF HOUSTON.

CITY OF HOUSTON
HOUSTON PUBLIC WORKS STANDARD

DETECTABLE WARNING CURB RAMP DETAILS

(SCALE: NOT TO SCALE)

APPROVED BY:

DocuSigned by: Suhail Kanwar — CITY ENGINEER
DocuSigned by: KHANG NGUYEN — CITY TRAFFIC ENGINEER
DocuSigned by: Carl Haddock — DIRECTOR OF HPW

EFF DATE: NOV-27-2023 | DWG NO: 02775-06

DISCLAIMER:
THE USE OF THIS STANDARD IS GOVERNED BY THE TEXAS ENGINEERING PRACTICE ACT. THE DESIGN REQUIREMENTS ON THIS STANDARD DO NOT PURPORT TO ADDRESS ALL OF THE SAFETY CONCERNS ASSOCIATED WITH THEIR USE. THE ENGINEER OF RECORD (EOR) IS TO REVIEW THOSE DESIGN REQUIREMENTS AND BY AUTHORIZING THEIR USE, ACCEPTS RESPONSIBILITY FOR THEIR APPLICABILITY, ADEQUACY AND SAFETY. NO WARRANTY OF ANY KIND IS MADE BY THE CITY OF HOUSTON FOR ANY PURPOSES WHATSOEVER. THE CITY OF HOUSTON ASSUMES NO RESPONSIBILITY FOR INCORRECT RESULTS OR DAMAGES RESULTING FROM ITS USE.

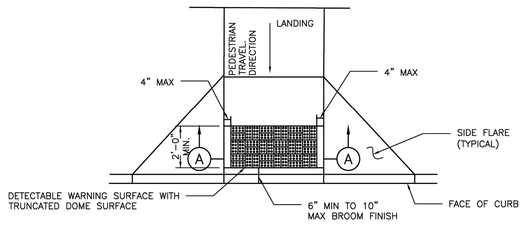

PLAN VIEW

DETECTABLE WARNING SURFACE

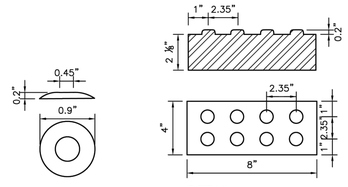

DETAIL

DETECTABLE WARNING PAVER

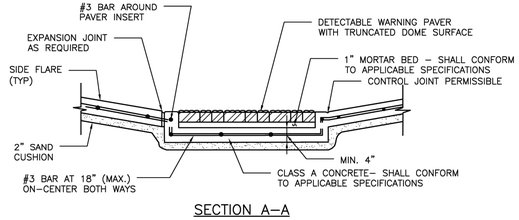

SECTION A-A

PAVER

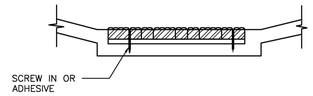

DETAIL A-5

NOTES:

GENERAL NOTES

1. ALL RAMPS AND SIDEWALKS/WALKWAYS SHALL BE CONSTRUCTED IN ACCORDANCE WITH HOUSTON PUBLIC WORKS STANDARDS, TEXAS ACCESSIBILITY STANDARDS (TAS) AND AMERICANS WITH DISABILITIES ACT (ADA) REQUIREMENTS. IF THERE IS A CONFLICT IN THE REQUIREMENTS, THE STRICTEST REQUIREMENTS SHALL GOVERN.
2. CURB RAMPS THAT ARE STEEPER THAN A 1:12 MAX SLOPE WILL NOT BE ACCEPTED BY THE CITY OF HOUSTON.

PAVERS

1. FURNISH DETECTABLE WARNING SURFACE UNITS MEETING ALL REQUIREMENTS OF ASTM C-936, C-33. LAY IN A TWO BY TWO UNIT BASKET WEAVE PATTERN OR AS DIRECTED.
2. LAY FULL-SIZE UNITS FIRST FOLLOWED BY CLOSURE UNITS CONSISTING OF AT LEAST 25 PERCENT OF A FULL UNIT. CUT DETECTABLE WARNING POWER UNITS USING A POWER SAW.

POLYMER CONCRETE

1. DETECTABLE WARNING TILES SHALL BE MADE OF POLYMER CONCRETE MATERIALS.
2. DETECTABLE WARNING TILES SHALL BE INSTALLED INTO FRESH CONCRETE (CAST-IN-PLACE) UTILIZING AN ANCHORING SYSTEM.
3. DETECTABLE WARNING TILES SHALL BE OF TERRACOTTA (BRICK-RED) COLOR AND COLORED THROUGHOUT TO GUARANTEE THE ADA REQUIRED COLOR CONTRAST.
4. DETECTABLE WARNING TILES SHALL MEET OR EXCEED THE FOLLOWING ASTM-BASED "STANDARDS" FOR CONCRETE MATERIALS.
   A. COMPRESSION STRENGTH > 12,500 PSI PER ASTM C 39-04
   B. WATER ABSORPTION < 0.25% PER ASTM C 97-09

PADS

1. FURNISH REQUIREMENTS OF ADAAG (MARCH 2003).
2. OTHER MATERIALS MAY BE USED IF APPROVED BY THE CITY ENGINEER

CITY OF HOUSTON
HOUSTON PUBLIC WORKS STANDARD

DETECTABLE WARNING SURFACE (OPTIONS)

(SCALE: NOT TO SCALE)

APPROVED BY:

DocuSigned by: Suhail Kanwar — CITY ENGINEER
DocuSigned by: KHANG NGUYEN — CITY TRAFFIC ENGINEER
DocuSigned by: Carl Haddock — DIRECTOR OF HPW

EFF DATE: NOV-27-2023 | DWG NO: 02775-07

A TETRA TECH COMPANY
Texas PE Firm Reg. #F-929
575 N. Dairy Ashford, Suite 700,
Houston, Texas 77079
T +1 281 589 7257
E usinfrastructure@rpsgroup.com

SURVEYED BY: KUO Inc.
FB NO. F-4578

This document is released for the purposes of interim review only under the authority of:

Jeremy Austin, P.E.
Texas P.E. No. 116816
03/30/2026

It is not to be used for bidding, construction, or permitting purposes.

CITY OF HOUSTON
HOUSTON PUBLIC WORKS

RECONSTRUCTION & REHABILITATION
COH LIFT STATIONS

PAVEMENT DETAILS
(SHEET 7 OF 11)
STD-C-14

WBS NUMBER	FOR CITY OF HOUSTON USE ONLY
R-000267-0178-3	
DRAWING SCALE	
AS NOTED	
CITY OF HOUSTON PM	
TAHA LOTIA	
SHEET NO. 24 OF 268	

PLOTTED: 3/30/2026 4:32 PM
PLOT STYLE: Coh_ctb_230809.ctb
FILE NAME: PAVEMENT DETAILS (SHEET 7 OF 11).dwg

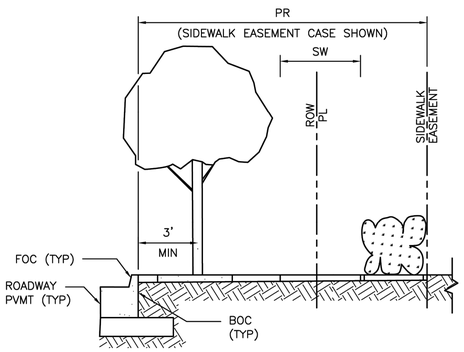

ELEVATION

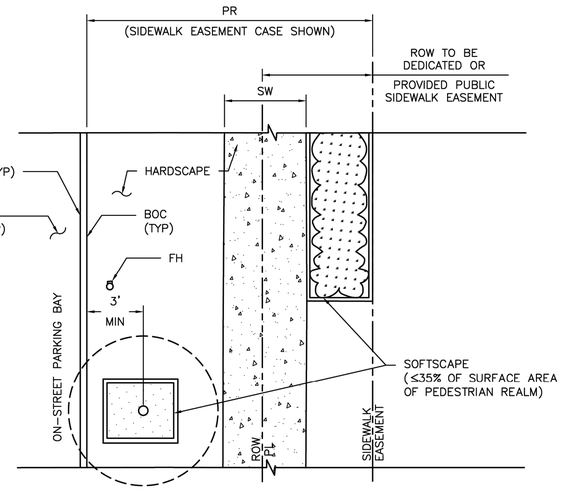

PLAN
PEDESTRIAN REALM PERFORMANCE STANDARD

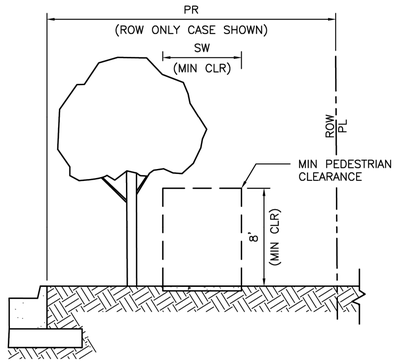

ELEVATION

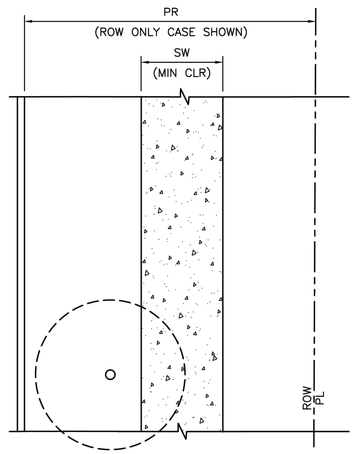

PLAN
SIDEWALK & CLEAR PEDESTRIAN ZONE
MANDATORY MINIMUM REQUIREMENT

NOTES

1. REFER TO CONTRACT DRAWINGS FOR PEDESTRIAN REALM (PR), AND SIDEWALK (SW) WIDTHS.
2. THE MINIMUM UNOBSTRUCTED VERTICAL CLEARANCE OF A SIDEWALK IS EIGHT (8) FEET AS MEASURED VERTICALLY FROM THE SURFACE OF THE SIDEWALK. FOR VERTICAL CLEARANCE TO IMPROVEMENTS CONSTRUCTED OVER A SIDEWALK WITHIN THE PEDESTRIAN REALM, REFER TO THE CONTRACT DRAWINGS.
3. FOR PEDESTRIAN REALM DESIGN BACKGROUND, REFER TO CHAPTER 42 OF THE CODE OF ORDINANCES, ARTICLE IV – ENHANCED PEDESTRIAN REALM STANDARDS AND THE USERS' GUIDE FOR WALKABLE PLACES AND TRANSIT–ORIENTED DEVELOPMENT.
4. FOR ADDITIONAL PLANTING REQUIREMENTS, REFER TO CHAPTER 33 OF THE CODE OF ORDINANCES, SECTION 129 – GENERAL PLANTING STANDARDS.

CITY OF HOUSTON
HOUSTON PUBLIC WORKS STANDARD

SIDEWALK AND CLEAR ZONE
TRANSIT CORRIDOR STREET

(SCALE: NOT TO SCALE)

APPROVED BY:

DocuSigned by: Suhail Kanwar — CITY ENGINEER
DocuSigned by: KHANG NGUYEN — CITY TRAFFIC ENGINEER
DocuSigned by: Carol Haddock — DIRECTOR OF HPW

EFF DATE: NOV–27–2023 | DWG NO: 02775–08

DISCLAIMER:
THE USE OF THIS STANDARD IS GOVERNED BY THE TEXAS ENGINEERING PRACTICE ACT. THE DESIGN REQUIREMENTS ON THIS STANDARD DO NOT PURPORT TO ADDRESS ALL OF THE SAFETY CONCERNS ASSOCIATED WITH THEIR USE. IT IS THE RESPONSIBILITY OF THE DESIGN ENGINEER TO ADOPT APPROPRIATE SITE SPECIFIC DESIGN DETAILS AS REQUIRED BY GOOD ENGINEERING PRACTICE. THE ENGINEER USING THIS STANDARD FOR ANY PROJECT ASSUMES ALL RESPONSIBILITY AND LIABILITY FOR THEIR APPLICABILITY TO THE PROJECT. THE CITY OF HOUSTON MAKES NO REPRESENTATIONS OR WARRANTIES OF ANY KIND WHATSOEVER WITH REGARD TO THIS STANDARD ON ANY PROJECT AND HEREBY DISCLAIMS ANY AND ALL LIABILITY FOR ALL DAMAGES OF ANY KIND ARISING FROM ITS USE OR ASSOCIATED WITH ITS USE. THE ENGINEER USING THIS STANDARD, BY SUCH USE, ACCEPTS RESPONSIBILITY FOR THEIR APPLICABILITY, ADEQUACY AND SAFETY. NO WARRANTY OF ANY KIND IS MADE BY THE CITY OF HOUSTON FOR ANY PURPOSES WHATSOEVER. THE CITY OF HOUSTON ASSUMES NO RESPONSIBILITY FOR INCORRECT RESULTS OR DAMAGES RESULTING FROM ITS USE.

RPS A TETRA TECH COMPANY
Texas PE Firm Reg. #F-929
575 N. Dairy Ashford, Suite 700, Houston, Texas 77079
T +1 281 589 7257
E usinfrastructure@rpsgroup.com

SURVEYED BY: KUO Inc.
FB NO. F–4578

This document is released for the purposes of interim review only under the authority of:

Jeremy Austin, P.E.
Texas P.E. No. 116816
03/30/2026

It is not to be used for bidding, construction, or permitting purposes.

CITY OF HOUSTON
HOUSTON PUBLIC WORKS

RECONSTRUCTION & REHABILITATION
COH LIFT STATIONS

PAVEMENT DETAILS
(SHEET 8 OF 11)
STD–C–15

WBS NUMBER	FOR CITY OF HOUSTON USE ONLY
R–000267–0178–3	
DRAWING SCALE	
AS NOTED	
CITY OF HOUSTON PM	
TAHA LOTIA	
SHEET NO. 25 OF 268	

PLOTTED: 3/30/2026 4:32 PM
PLOT STYLE: Coh_ctb_230809.ctb
FILE NAME: PAVEMENT DETAILS (SHEET 8 OF 11).dwg

DISCLAIMER:
THE USE OF THIS STANDARD IS GOVERNED BY THE TEXAS ENGINEERING PRACTICE ACT. THE DESIGN REQUIREMENTS ON THIS STANDARD DO NOT PURPORT TO ADDRESS ALL OF THE SAFETY CONCERNS ASSOCIATED WITH THEIR USE. THE ENGINEER OF RECORD (EOR) IS TO REVIEW THESE DESIGN REQUIREMENTS AND BY AUTHORIZING THEIR USE AS PART OF THE CONSTRUCTION PLANS ASSUMES THE RESPONSIBILITY FOR ADDRESSING ALL SUCH CONCERNS. NO WARRANTY OR GUARANTEE IS MADE BY THE CITY OF HOUSTON FOR ANY PURPOSES WHATSOEVER. THE CITY OF HOUSTON ASSUMES NO RESPONSIBILITY FOR INCORRECT RESULTS OR DAMAGES RESULTING FROM ITS USE.

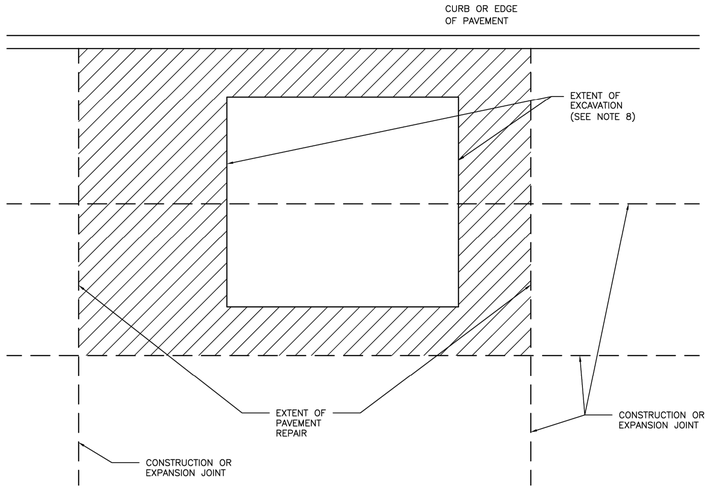

NOTES:

1. EXTENT OF PAVEMENT REPAIR SHALL BE PERPENDICULAR AND PARALLEL TO TRAVEL WAY.
2. REPLACE ENTIRE PANEL WIDTH AND LENGTH TO NEAREST CONSTRUCTION OR EXPANSION JOINT BEYOND EDGE OF EXCAVATION.
3. SAW CUT AND EXPOSE 15" OF REINFORCING STEEL WITHIN EXISTING PAVEMENT. PROVIDE HORIZONTAL DOWELS (PER SPECIFICATION SECTION 02951—PAVEMENT REPAIR AND RESTORATION) IF EXISTING REINFORCING IS BROKEN OFF.
4. REPLACE CURB WHEN ADJACENT LANE IS REPLACED.
5. MAINTAIN EXPANSION JOINTS AT EXISTING LOCATIONS UNLESS OTHERWISE DIRECTED BY CITY ENGINEER.
6. SPECIALTY PAVEMENTS (IE: BRICK PAVERS) TO BE REPLACED WITH MATCHING PAVEMENT IN ALL CASES.
7. REPLACE PAVEMENT MARKINGS IN ACCORDANCE WITH CITY OF HOUSTON STANDARD SPECIFICATIONS 02764—RAISED PAVEMENT MARKERS AND 02767—THERMOPLASTIC PAVEMENT MARKINGS.
8. EXTENT OF EXCAVATION INCLUDES 18" OVERCUT AS SHOWN ON STANDARD DETAIL 02951—04 PAVEMENT REPAIR DETAIL FOR STREET CUTS (FLEX—BASE PAVEMENT & CONCRETE PAVEMENT).

CITY OF HOUSTON
HOUSTON PUBLIC WORKS STANDARD

STREET CUT FOR CONCRETE PAVEMENT REPLACEMENT/RESTORATION AGE OF PAVEMENT ≤ 5YRS
(SCALE: NOT TO SCALE)

APPROVED BY:

DocuSigned by: Sukul Tanwar — CITY ENGINEER
DocuSigned by: KHANG NGUYEN — CITY TRAFFIC ENGINEER
DocuSigned by: Carol Haddock — DIRECTOR OF HPW

EFF DATE: NOV—27—2023 | DWG NO: 02951—01

DISCLAIMER:
THE USE OF THIS STANDARD IS GOVERNED BY THE TEXAS ENGINEERING PRACTICE ACT. THE DESIGN REQUIREMENTS ON THIS STANDARD DO NOT PURPORT TO ADDRESS ALL OF THE SAFETY CONCERNS ASSOCIATED WITH THEIR USE. THE ENGINEER OF RECORD (EOR) IS TO REVIEW THESE DESIGN REQUIREMENTS AND BY AUTHORIZING THEIR USE AS PART OF THE CONSTRUCTION PLANS ASSUMES THE RESPONSIBILITY FOR ADDRESSING ALL SUCH CONCERNS. NO WARRANTY OR GUARANTEE IS MADE BY THE CITY OF HOUSTON FOR ANY PURPOSES WHATSOEVER. THE CITY OF HOUSTON ASSUMES NO RESPONSIBILITY FOR INCORRECT RESULTS OR DAMAGES RESULTING FROM ITS USE.

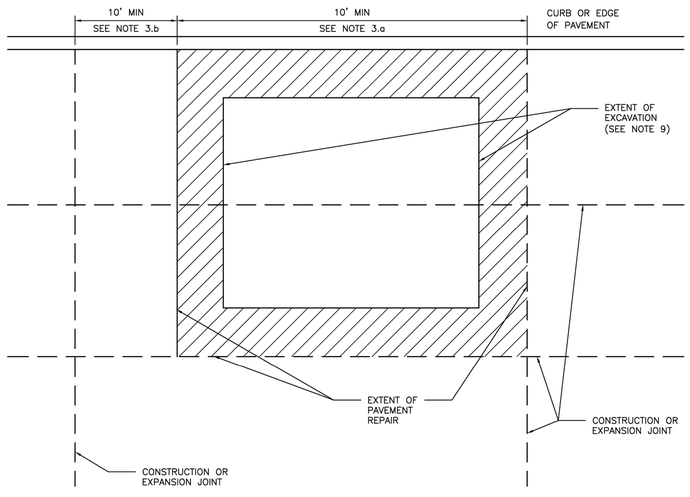

NOTES:

1. EXTENT OF PAVEMENT REPAIR SHALL BE PERPENDICULAR AND PARALLEL TO TRAVEL WAY.
2. WIDTH:
   REPLACE PANEL WIDTH TO NEAREST CONSTRUCTION OR EXPANSION JOINT BEYOND EDGE OF EXCAVATION.
3. LENGTH:
   a. MINIMUM LENGTH OF PAVEMENT REPAIR ALONG TRAVEL WAY IS 10' FROM THE NEAREST JOINT.
   b. IF EXTENT OF PAVEMENT REPAIR IS LESS THAN 10' FROM EXISTING CONSTRUCTION OR EXPANSION JOINT, EXTEND PAVEMENT REPAIR TO EXISTING JOINT.
4. SAW CUT AND EXPOSE 15" OF REINFORCING STEEL AROUND EDGE OF PANEL REPLACEMENT. PROVIDE HORIZONTAL DOWELS (PER SPECIFICATION SECTION 02951—PAVEMENT REPAIR AND RESTORATION) IF REINFORCING IS BROKEN OFF OR DOES NOT EXIST.
5. REPLACE CURB WHEN ADJACENT LANE IS REPLACED.
6. MAINTAIN EXPANSION JOINTS AT EXISTING LOCATIONS UNLESS OTHERWISE DIRECTED BY CITY ENGINEER.
7. SPECIALTY PAVEMENTS (IE: BRICK PAVERS) TO BE REPLACED WITH MATCHING PAVEMENT IN ALL CASES.
8. REPLACE PAVEMENT MARKINGS IN ACCORDANCE WITH CITY OF HOUSTON STANDARD SPECIFICATIONS 02764—RAISED PAVEMENT MARKERS AND 02767—THERMOPLASTIC PAVEMENT MARKINGS.
9. EXTENT OF EXCAVATION INCLUDES 18" OVERCUT AS SHOWN ON STANDARD DETAIL 02951—04 PAVEMENT REPAIR DETAIL FOR STREET CUTS (FLEX—BASE PAVEMENT & CONCRETE PAVEMENT).

CITY OF HOUSTON
HOUSTON PUBLIC WORKS STANDARD

STREET CUT FOR CONCRETE PAVEMENT REPLACEMENT/RESTORATION AGE OF PAVEMENT > 5YRS
(SCALE: NOT TO SCALE)

APPROVED BY:

DocuSigned by: Sukul Tanwar — CITY ENGINEER
DocuSigned by: KHANG NGUYEN — CITY TRAFFIC ENGINEER
DocuSigned by: Carol Haddock — DIRECTOR OF HPW

EFF DATE: NOV—27—2023 | DWG NO: 02951—02

RPS — A TETRA TECH COMPANY
Texas PE Firm Reg. #F-929
575 N. Dairy Ashford, Suite 700, Houston, Texas 77079
T +1 281 589 7257
E usinfrastructure@rpsgroup.com

SURVEYED BY: KUO Inc.
FB NO. F—4578

This document is released for the purposes of interim review only under the authority of:

Jeremy Austin, P.E.
Texas P.E. No. 116816
03/30/2026

It is not to be used for bidding, construction, or permitting purposes.

CITY OF HOUSTON
HOUSTON PUBLIC WORKS

RECONSTRUCTION & REHABILITATION COH LIFT STATIONS

PAVEMENT DETAILS
(SHEET 9 OF 11)
STD—C—16

WBS NUMBER	FOR CITY OF HOUSTON USE ONLY
R—000267—0178—3	
DRAWING SCALE	
AS NOTED	
CITY OF HOUSTON PM	
TAHA LOTIA	
SHEET NO. 26 OF 268	

PLOTTED: 3/30/2026 4:32 PM
PLOT STYLE: Coh_ctb_230809.ctb
FILE NAME: PAVEMENT DETAILS (SHEET 9 OF 11).dwg

DISCLAIMER:
THE USE OF THIS STANDARD IS GOVERNED BY THE TEXAS ENGINEERING PRACTICE ACT. THE DESIGN REQUIREMENTS ON THIS STANDARD DO NOT PURPORT TO ADDRESS ALL OF THE SAFETY CONCERNS ASSOCIATED WITH THEIR USE. THE ENGINEER OF RECORD (EOR) IS TO REVIEW THESE DESIGN REQUIREMENTS AND BY AUTHORIZING THEIR USE ASSUMES RESPONSIBILITY FOR THE WORK DESIGNED. ANY USER OF THIS STANDARD AGREES, BY SUCH USE, TO HOLD HARMLESS AND INDEMNIFY THE CITY OF HOUSTON FOR ANY AND ALL LIABILITY OF ANY NATURE ARISING OUT OF OR RESULTING FROM THE USE OF THIS STANDARD OR MODIFICATIONS THEREOF. WHATSOEVER, THE CITY OF HOUSTON ASSUMES NO RESPONSIBILITY FOR INCORRECT RESULTS OR DAMAGES RESULTING FROM ITS USE.

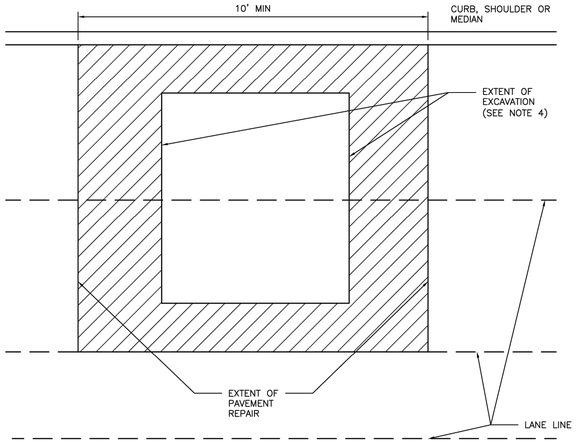

NOTES:

1. EXTENT OF PAVEMENT REPAIR SHALL BE PERPENDICULAR AND PARALLEL TO TRAVEL WAY.
2. FLEXIBLE BASE: REPLACE BASE TO SAME THICKNESS PLUS TWO INCHES (2") FOR EXTENT OF EXCAVATION. USE APPROVED BASE MATERIAL TYPE.*
3. SURFACE COURSE:
   - 3.1. WIDTH: SURFACE MILL AND OVERLAY FULL WIDTH OF LANE(S) TO NEAREST LANE DIVIDER BEYOND EDGE OF EXCAVATION.
   - 3.2. LENGTH: MINIMUM LENGTH OF SURFACE MILL ALONG TRAVEL WAY IS 10'.
   - 3.3. REPLACE PAVEMENT MARKINGS IN ACCORDANCE WITH CITY OF HOUSTON STANDARD SPECIFICATIONS 02764–RAISED PAVEMENT MARKERS AND 02767–THERMOPLASTIC PAVEMENT MARKINGS.
4. EXTENT OF EXCAVATION INCLUDES 18" OVER CUT AS SHOWN ON STANDARD DETAIL 02951–04 PAVEMENT REPAIR DETAIL FOR STREET CUTS (FLEX–BASE PAVEMENT AND CONCRETE PAVEMENT).
5. ADDITIONAL REQUIREMENTS FOR ASPHALT OVERLAY ON CONCRETE PAVEMENT:
   - 5.1. REPLACE CONCRETE FOR EXTENT OF EXCAVATION. REPLACE TO SAME THICKNESS PLUS TWO INCHES (2").
   - 5.2. WIDTH:
     - 5.2.1. IF EXCAVATION EXTENDS MORE THAN HALF OF A LANE, REPLACE ENTIRE LANE OF CONCRETE. OTHERWISE USE STANDARD DETAIL 02951–04 THROUGH 05.
   - 5.3. SAW CUT AND EXPOSE 15" OF REINFORCING STEEL AROUND EDGE OF CONCRETE REPLACEMENT. IF NO REINFORCING STEEL EXISTS, USE HORIZONTAL DOWELS PER CITY OF HOUSTON STANDARD SPECIFICATION SECTION 02951–PAVEMENT REPAIR AND RESTORATION.
   - 5.4. REPLACE CURB WHEN ADJACENT LANE IS REPLACED.
   - 5.5. MAINTAIN CONCRETE EXPANSION JOINTS AT EXISTING LOCATIONS UNLESS OTHERWISE APPROVED BY CITY ENGINEER.

CITY OF HOUSTON
HOUSTON PUBLIC WORKS STANDARD

STREET CUT FOR ASPHALT PAVEMENT REPLACEMENT/RESTORATION FOR PAVEMENT OF ALL AGES
(SCALE: NOT TO SCALE)

APPROVED BY:

DocuSigned by: Sukul Tanwar — CITY ENGINEER
DocuSigned by: KHANG NGUYEN — CITY TRAFFIC ENGINEER
DocuSigned by: Carol Haddock — DIRECTOR OF HPW

EFF DATE: NOV–27–2023 | DWG NO: 02951–03

DISCLAIMER:
THE USE OF THIS STANDARD IS GOVERNED BY THE TEXAS ENGINEERING PRACTICE ACT. THE DESIGN REQUIREMENTS ON THIS STANDARD DO NOT PURPORT TO ADDRESS ALL OF THE SAFETY CONCERNS ASSOCIATED WITH THEIR USE. THE ENGINEER OF RECORD (EOR) IS TO REVIEW THESE DESIGN REQUIREMENTS AND BY AUTHORIZING THEIR USE ASSUMES RESPONSIBILITY FOR THE WORK DESIGNED. ANY USER OF THIS STANDARD AGREES, BY SUCH USE, TO HOLD HARMLESS AND INDEMNIFY THE CITY OF HOUSTON FOR ANY AND ALL LIABILITY OF ANY NATURE ARISING OUT OF OR RESULTING FROM THE USE OF THIS STANDARD OR MODIFICATIONS THEREOF. WHATSOEVER, THE CITY OF HOUSTON ASSUMES NO RESPONSIBILITY FOR INCORRECT RESULTS OR DAMAGES RESULTING FROM ITS USE.

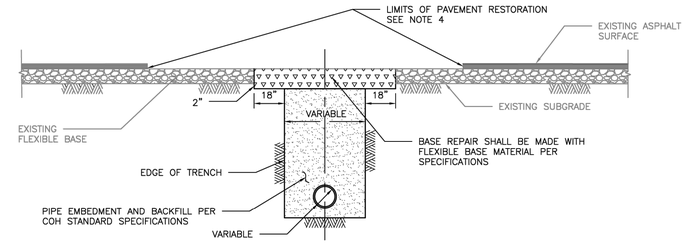

ELEVATION A
REPAIR OF FLEXIBLE BASE PAVEMENT

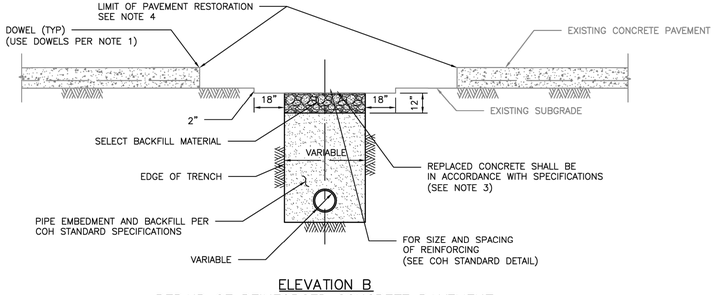

ELEVATION B
REPAIR OF REINFORCED CONCRETE PAVEMENT

NOTES:

1. EXPOSE 15" OF REINFORCING STEEL AT PROPOSED SAWED JOINT. IF NO REINFORCING STEEL EXISTS, USE HORIZONTAL DOWELS. HORIZONTAL DOWELS SHALL BE #6 BAR, 24" LONG, 24" C–C, DRILLED AND EMBEDDED 8" INTO THE CENTER OF THE EXISTING SLAB. WITH "PO ROC" OR EQUAL.
2. IF REINFORCED CONCRETE IS OVERLAYED WITH ASPHALT, REPLACE WITH 2" MIN HMAC SURFACING.
3. REFER TO STANDARD DETAIL 02751–01 FOR REINFORCING STEEL REQUIREMENTS.
4. REFER TO STANDARD DETAIL 02951–01 THROUGH 03 FOR PAVEMENT RESTORATION LIMITS.

CITY OF HOUSTON
HOUSTON PUBLIC WORKS STANDARD

PAVEMENT REPAIR DETAIL FOR STREET CUTS
(FLEX–BASE PAVEMENT & CONCRETE PAVEMENT)
(SCALE: NOT TO SCALE)

APPROVED BY:

DocuSigned by: Sukul Tanwar — CITY ENGINEER
DocuSigned by: KHANG NGUYEN — CITY TRAFFIC ENGINEER
DocuSigned by: Carol Haddock — DIRECTOR OF HPW

EFF DATE: NOV–27–2023 | DWG NO: 02951–04

RPS — A TETRA TECH COMPANY
Texas PE Firm Reg. #F-929
575 N. Dairy Ashford, Suite 700, Houston, Texas 77079
T +1 281 589 7257
E usinfrastructure@rpsgroup.com

SURVEYED BY: KUO Inc.
FB NO. F–4578

This document is released for the purposes of interim review only under the authority of:
Jeremy Austin, P.E.
Texas P.E. No. 116816
03/30/2026
It is not to be used for bidding, construction, or permitting purposes.

CITY OF HOUSTON
HOUSTON PUBLIC WORKS

RECONSTRUCTION & REHABILITATION
COH LIFT STATIONS

PAVEMENT DETAILS
(SHEET 10 OF 11)
STD–C–17

WBS NUMBER	FOR CITY OF HOUSTON USE ONLY
R–000267–0178–3	
DRAWING SCALE	
AS NOTED	
CITY OF HOUSTON PM	
TAHA LOTIA	
SHEET NO. 27 OF 268	

PLOTTED: 3/30/2026 4:32 PM
PLOT STYLE: Coh_ctb_230809.ctb
FILE NAME: PAVEMENT DETAILS (SHEET 10 OF 11).dwg

DISCLAIMER:
THE USE OF THIS STANDARD IS GOVERNED BY THE TEXAS ENGINEERING PRACTICE ACT. THE DESIGN REQUIREMENTS ON THIS STANDARD DO NOT PURPORT TO ADDRESS ALL OF THE SAFETY CONCERNS ASSOCIATED WITH THEIR USE. THE ENGINEER OF RECORD (EOR) IS TO REVIEW THESE DESIGN REQUIREMENTS AND BY AUTHORIZING THEIR USE, ACCEPTS RESPONSIBILITY FOR THEIR APPLICABILITY, ADEQUACY AND SAFETY. NO WARRANTY OF ANY KIND IS MADE BY THE CITY OF HOUSTON FOR ANY PURPOSES WHATSOEVER. THE CITY OF HOUSTON ASSUMES NO RESPONSIBILITY FOR INCORRECT RESULTS OR DAMAGES RESULTING FROM ITS USE.

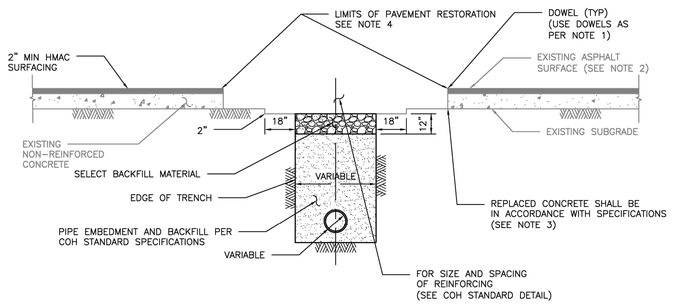

ELEVATION C
REPAIR OF NON-REINFORCED CONCRETE PAVEMENT

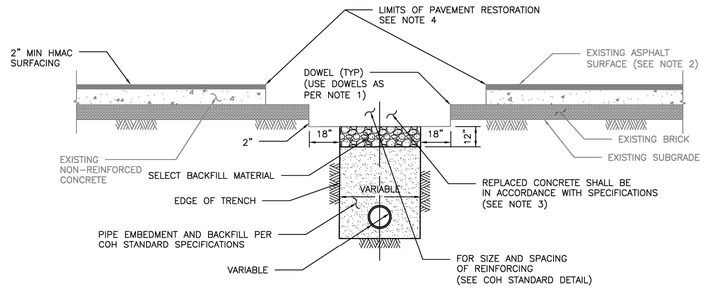

ELEVATION D
REPAIR OF NON-REINFORCED CONCRETE PAVEMENT WITH BRICK

NOTES:

1. EXPOSE 15" OF REINFORCING STEEL AT PROPOSED SAWED JOINT. IF NO REINFORCING STEEL EXISTS, USE HORIZONTAL DOWELS. HORIZONTAL DOWELS SHALL BE #6 BAR, 24" LONG, 24" C-C, DRILLED AND EMBEDDED 8" INTO THE CENTER OF THE EXISTING SLAB. WITH "PO ROC" OR EQUAL.
2. IF REINFORCED CONCRETE IS OVERLAYED REPLACE WITH SAME THICKNESS OF HMAC SURFACING.
3. REFER TO STANDARD DETAIL 02751-01 FOR REINFORCING STEEL REQUIREMENT
4. REFER TO STANDARD DETAILS 02951-01 THROUGH 03 FOR PAVEMENT RESTORATION LIMITS.

CITY OF HOUSTON
HOUSTON PUBLIC WORKS STANDARD

PAVEMENT REPAIR DETAIL
FOR STREET CUTS
(NON-REINFORCED CONCRETE & BRICK PAVEMENT)
(SCALE: NOT TO SCALE)

APPROVED BY:

DocuSigned by: Suhail Kanwar — CITY ENGINEER
DocuSigned by: Carl Haddock — DIRECTOR OF HPW
DocuSigned by: KHANG NGUYEN — CITY TRAFFIC ENGINEER

EFF DATE: NOV-27-2023 | DWG NO: 02951-05

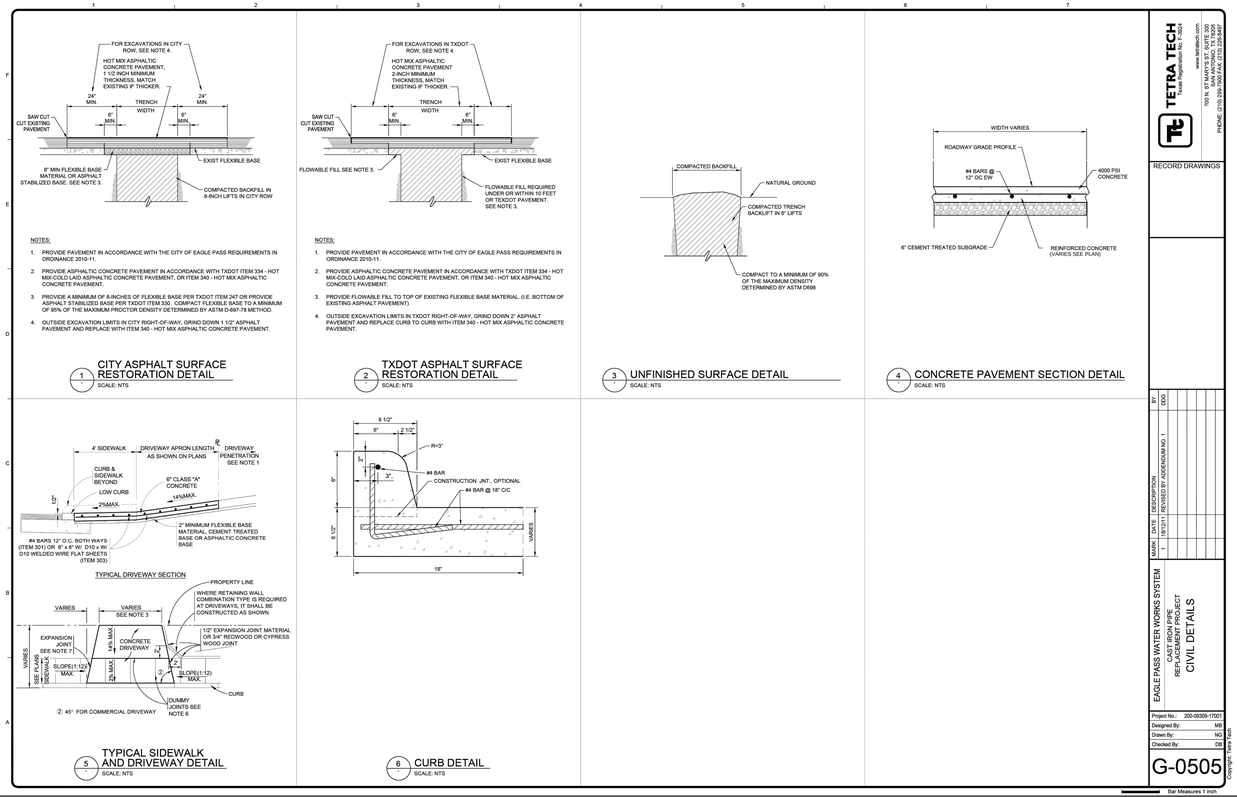

TETRA TECH
A TETRA TECH COMPANY
700 N. ST MARY'S ST. SUITE 300
SAN ANTONIO, TEXAS 78205
PHONE: (210) 299-7900 FAX: (210) 226-8497
www.tetratech.com

RECORD DRAWINGS

MARK	DATE	DESCRIPTION	BY
1	181211	REVISED BY ADDENDUM NO. 1	DCG

EAGLE PASS WATER WORKS SYSTEM
CITY WIDE
REPLACEMENT PROJECT
CIVIL DETAILS

Project No.: 200-00309-17001
Designed By: MB
Drawn By: NG
Checked By: DB

G-0505

Copyright, Tetra Tech.

Bar Measures 1 inch

RPS
A TETRA TECH COMPANY
Texas PE Firm Reg. #F-929
575 N. Dairy Ashford, Suite 700,
Houston, Texas 77079
T +1 281 589 7257
E usinfrastructure@rpsgroup.com

SURVEYED BY: KUO Inc.
FB NO. F-4578

This document is released for the purposes of interim review only under the authority of:
Jeremy Austin, P.E.
Texas P.E. No. 116816
03/30/2026
It is not to be used for bidding, construction, or permitting purposes.

CITY OF HOUSTON
HOUSTON PUBLIC WORKS

RECONSTRUCTION & REHABILITATION
COH LIFT STATIONS

PAVEMENT DETAILS
(SHEET 11 OF 11)
STD-C-18

WBS NUMBER	FOR CITY OF HOUSTON USE ONLY
R-000267-0178-3	
DRAWING SCALE	
AS NOTED	
CITY OF HOUSTON PM	
TAHA LOTIA	
SHEET NO. 28 OF 268	

PLOTTED: 3/30/2026 4:32 PM
PLOT STYLE: Coh_ctb_230809.ctb
FILE NAME: PAVEMENT DETAILS (SHEET 11 OF 11).dwg

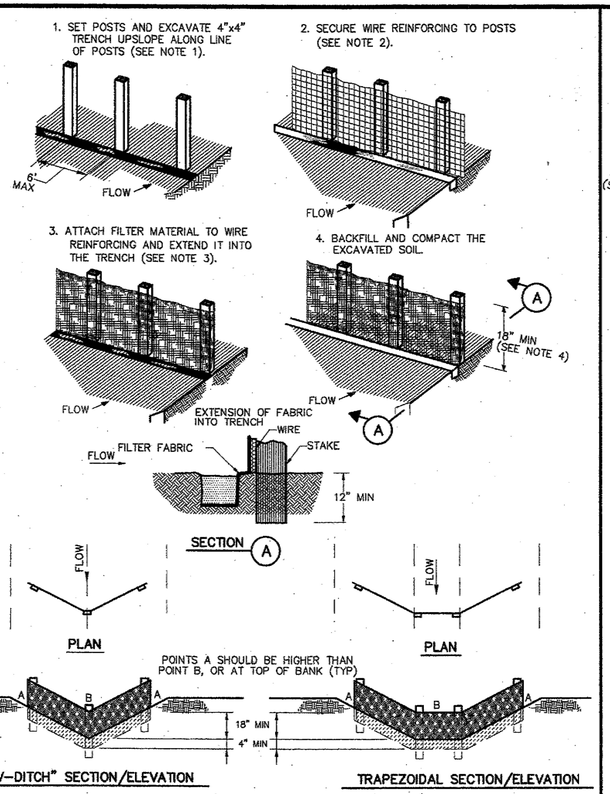

CONSTRUCTION NOTES:

1. SET 2 INCH BY 2 INCH WOODEN STAKES SPACED A MAX OF 6 FEET APART AND EMBEDDED A MIN OF 12 INCHES.
2. WOVEN WIRE REINFORCING TO BE FASTENED SECURELY TO BARRIER POSTS WITH STAPLES.
3. FILTER CLOTH TO BE FASTENED SECURELY TO WOVEN WIRE REINFORCING, WITH TIES SPACED EVERY 24 INCHES AT TOP AND MIDSECTION.
4. MINIMUM HEIGHT OF FILTER SHOULD BE 18 INCHES AND A MAXIMUM OF 36 INCHES ABOVE NATURAL GROUND.
5. WHEN TWO SECTIONS OF FILTER CLOTH ADJOIN EACH OTHER THEY SHALL BE OVERLAPPED 6 INCHES AT THE POSTS, AND FOLDED.
6. SEE COH STANDARD SPECIFICATION FOR FILTER FABRIC BARRIER.

SYMBOL

REINFORCED FILTER FABRIC BARRIER

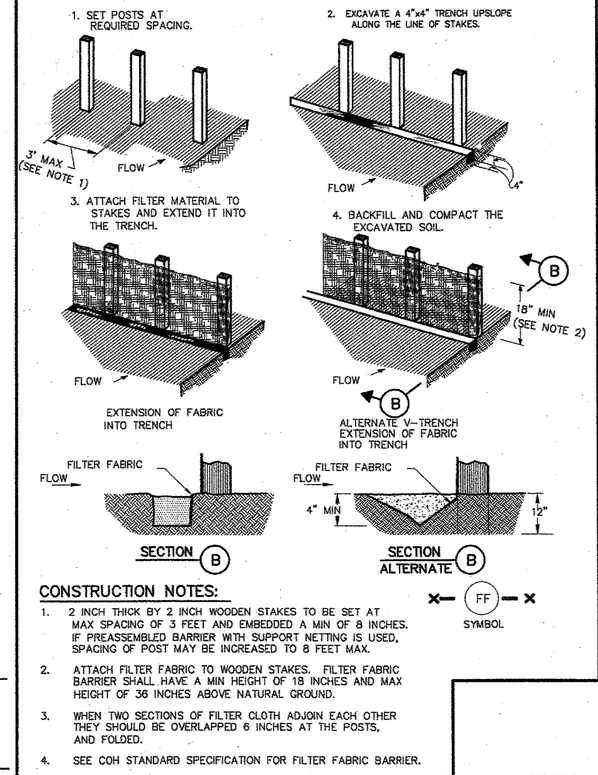

CONSTRUCTION NOTES:

1. 2 INCH THICK BY 2 INCH WOODEN STAKES TO BE SET AT MAX SPACING OF 3 FEET AND EMBEDDED A MIN OF 8 INCHES. IF PREASSEMBLED BARRIER WITH SUPPORT NETTING IS USED, SPACING OF POST MAY BE INCREASED TO 8 FEET MAX.
2. ATTACH FILTER FABRIC TO WOODEN STAKES. FILTER FABRIC BARRIER SHALL HAVE A MIN HEIGHT OF 18 INCHES AND MAX HEIGHT OF 36 INCHES ABOVE NATURAL GROUND.
3. WHEN TWO SECTIONS OF FILTER CLOTH ADJOIN EACH OTHER THEY SHOULD BE OVERLAPPED 6 INCHES AT THE POSTS, AND FOLDED.
4. SEE COH STANDARD SPECIFICATION FOR FILTER FABRIC BARRIER.

SYMBOL

FILTER FABRIC BARRIER

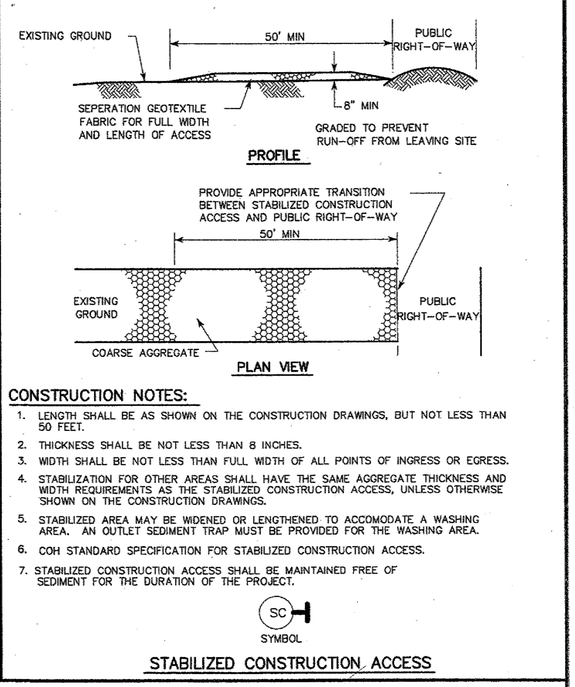

CONSTRUCTION NOTES:

1. LENGTH SHALL BE AS SHOWN ON THE CONSTRUCTION DRAWINGS, BUT NOT LESS THAN 50 FEET.
2. THICKNESS SHALL BE NOT LESS THAN 8 INCHES.
3. WIDTH SHALL BE NOT LESS THAN FULL WIDTH OF ALL POINTS OF INGRESS OR EGRESS.
4. STABILIZATION FOR OTHER AREAS SHALL HAVE THE SAME AGGREGATE THICKNESS AND WIDTH REQUIREMENTS AS THE STABILIZED CONSTRUCTION ACCESS, UNLESS OTHERWISE SHOWN ON THE CONSTRUCTION DRAWINGS.
5. STABILIZED AREA MAY BE WIDENED OR LENGTHENED TO ACCOMODATE A WASHING AREA. AN OUTLET SEDIMENT TRAP MUST BE PROVIDED FOR THE WASHING AREA.
6. COH STANDARD SPECIFICATION FOR STABILIZED CONSTRUCTION ACCESS.
7. STABILIZED CONSTRUCTION ACCESS SHALL BE MAINTAINED FREE OF SEDIMENT FOR THE DURATION OF THE PROJECT.

SC
SYMBOL

STABILIZED CONSTRUCTION ACCESS

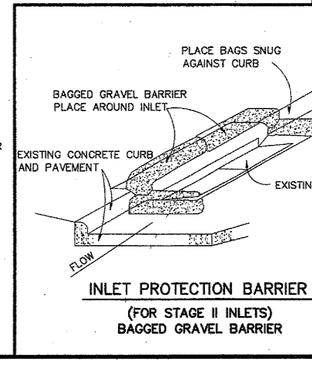

INLET PROTECTION BARRIER

(FOR STAGE II INLETS)
BAGGED GRAVEL BARRIER

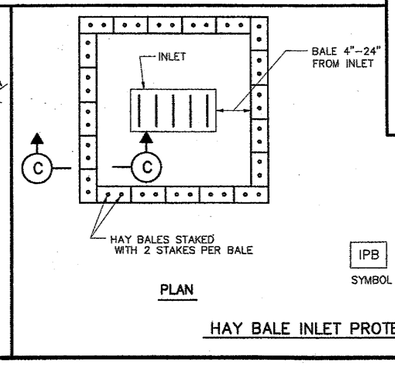

IPB
SYMBOL

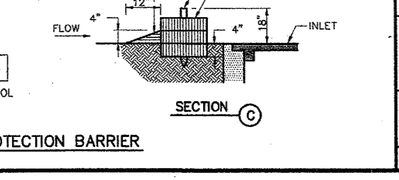

HAY BALE INLET PROTECTION BARRIER

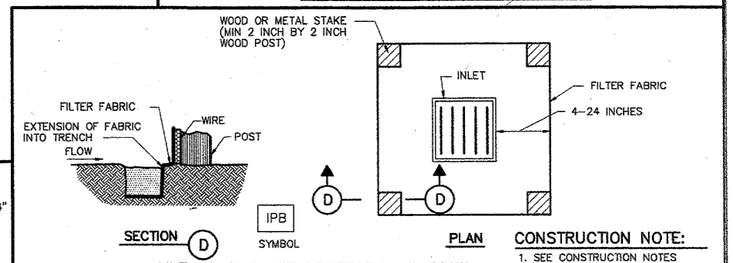

SILT FENCE INLET PROTECTION BARRIER

CONSTRUCTION NOTE:

1. SEE CONSTRUCTION NOTES FOR RFB.

CITY OF HOUSTON
DEPARTMENT OF PUBLIC WORKS AND ENGINEERING

STORM WATER POLLUTION PREVENTION PLAN DETAILS

(NOT TO SCALE)

APPROVED — CITY ENGINEER
APPROVED — DIRECTOR OF PUBLIC WORKS AND ENGINEERING

EFF DATE: JULY-01-2010
DWG NO: 01571-01

NO.	DATE	REVISION	APP.
	MM/DD/YY	BRIEF DESCRIPTION	XXX
	MM/DD/YY	BRIEF DESCRIPTION	XXX
	MM/DD/YY	BRIEF DESCRIPTION	XXX

DESIGN ENGINEER NAME ADDRESS TELEPHONE NUMBER TX FIRM NUMBER	This document is released for the purposes of interim review only under the authority of: **Jeremy Austin, P.E.** Texas P.E. No. 116816 **03/30/2026** It is not to be used for bidding, construction, or permitting purposes.
SURVEYED BY: FB NO. 000000	

CITY OF HOUSTON
HOUSTON PUBLIC WORKS

RECONSTRUCTION & REHABILITATION
COH LIFT STATIONS

STORM WATER POLLUTION
PREVENTION DETAILS
STD-C-19

WBS NUMBER	FOR CITY OF HOUSTON USE ONLY
R-000267-0178-3	
DRAWING SCALE	
AS NOTED	
CITY OF HOUSTON PM	
TAHA LOTIA	
SHEET NO. 29 OF 268	

FILE PATH: C:\Users\andres.martinezjr\DC\ACCDocs\Tetra Tech Inc\200-317106-24001 COH LS Rehab Design\Project Files\CAD\R-000267--OPLOT- STD-C-19.dgn

DISCLAIMER:
THE USE OF THIS STANDARD IS GOVERNED BY THE TEXAS ENGINEERING PRACTICE ACT. THE DESIGN REQUIREMENTS ON THIS STANDARD DO NOT PURPORT TO ADDRESS ALL OF THE SAFETY CONCERNS ASSOCIATED WITH ITS USE. ANY RELIANCE ON THIS STANDARD WILL REQUIRE THE END USER TO EXERCISE ENGINEERING JUDGMENT REGARDING ITS PROPRIETY AND APPLICABILITY TO A GIVEN PROJECT. ANY MODIFICATION TO THIS STANDARD BY ANYONE OTHER THAN THE CITY OF HOUSTON ASSUMES ALL RESPONSIBILITY FOR INCORRECT RESULTS OR DAMAGES RESULTING FROM ITS USE
DISCLAIMER:
THE USE OF THIS STANDARD IS GOVERNED BY THE TEXAS ENGINEERING PRACTICE ACT. THE DESIGN REQUIREMENTS ON THIS STANDARD DO NOT PURPORT TO ADDRESS ALL OF THE SAFETY CONCERNS ASSOCIATED WITH ITS USE. ANY RELIANCE ON THIS STANDARD WILL REQUIRE THE END USER TO EXERCISE ENGINEERING JUDGMENT REGARDING ITS PROPRIETY AND APPLICABILITY TO A GIVEN PROJECT. ANY MODIFICATION TO THIS STANDARD BY ANYONE OTHER THAN THE CITY OF HOUSTON ASSUMES ALL RESPONSIBILITY FOR INCORRECT RESULTS OR DAMAGES RESULTING FROM ITS USE

GENERAL NOTES

1. THE CONTRACTOR SHALL PROVIDE AND INSTALL TRAFFIC CONTROL DEVICES IN CONFORMANCE WITH PART VI OF THE TEXAS MANUAL ON UNIFORM TRAFFIC CONTROL DEVICES (TMUTCD) LATEST EDITION WITH REVISIONS DURING THE ENTIRE CONSTRUCTION PERIOD.
2. ALL SIGNS AND TRAFFIC CONTROL DEVICES SHALL CONFORM THE LATEST VERSION OF THE TMUTCD.
3. NO LANES SHALL BE CLOSED DURING THE HOURS OF 7:00 AM TO 9:00 AM AND 4:00 PM TO 6:00 PM MONDAY THRU FRIDAY WITHOUT APPROVAL OF THE CITY TRAFFIC ENGINEER.
4. NO WORK SHALL BE PERFORMED IN RESIDENTIAL AREAS FROM 7:00 PM TO 7:00 AM.
5. CONTRACTOR SHALL MAINTAIN APPROVED NUMBER OF THROUGH LANES OF TRAFFIC IN EACH DIRECTION DURING CONSTRUCTION WORKING HOURS. TRAFFIC CONTROL PLANS SHALL INCLUDE ONE-WAY AND/OR DETOUR PLANS. CONTRACTOR SHALL MAINTAIN ADA COMPLIANT PEDESTRIAN ACCESS TO BUS STOPS AND ADEQUATE BUS ACCESS TO ALL THE BUS STOPS.
6. CONTRACTOR SHALL MAINTAIN TRAFFIC LANES AND DETOURS ACCORDING TO TRAFFIC CONTROL PLANS DURING WORKING HOURS.
7. CONTRACTOR SHALL COVER OPEN PAVEMENT EXCAVATIONS FOR MINOR UTILITY WORK WITH ANCHORED STEEL PLATES DURING NON-WORKING HOURS, AND OPEN LANES FOR NORMAL TRAFFIC FLOW WHEN FEASIBLE.
8. IF THE CONTRACTOR CHOOSES TO USE A DIFFERENT METHOD OF "TRAFFIC CONTROL PLANS" DURING THE CONSTRUCTION THAN WHAT IS OUTLINED IN THE CONTRACT DRAWINGS, THE CONTRACTOR SHALL BE RESPONSIBLE TO PREPARE AND SUBMIT AN ALTERNATE SET OF TRAFFIC CONTROL PLANS TO THE CITY OF HOUSTON PROJECT MANAGER FOR APPROVAL TEN WORKING DAYS PRIOR TO IMPLEMENTATION. THESE PLANS SHALL BE DRAWN TO SCALE ON REPRODUCIBLE MYLARS AND SHALL BE SEALED BY A LICENSED ENGINEER IN THE STATE OF TEXAS. OFFICE OF THE ENGINEER, MOBILITY PERMITS SECTION REPRESENTATIVE APPROVAL IS REQUIRED TO ACCEPT THE PROPOSED CHANGES.
9. CONTRACTOR SHALL SECURE LANE/SIDEWALK/BICYCLE FACILITY CLOSURE PERMITS FROM OFFICE OF CITY ENGINEER (MOBILITY PERMIT SECTION AT https://pwtrub.houstontx.gov) BEFORE IMPLEMENTING THE TRAFFIC CONTROL PLAN. THE APPLICATION MUST BE SUBMITTED AT LEAST TEN DAYS PRIOR TO THE IMPLEMENTATION OF THE TRAFFIC CONTROL PLAN AND/OR BEGINNING CONSTRUCTION WORK. THE CONTRACTOR SHALL PROVIDE TRAFFIC CONTROL PLANS, CONSTRUCTION SEQUENCING, AND CONSTRUCTION SCHEDULE WITH THE APPLICATION.
10. CONTRACTOR SHALL HAVE APPROVED TRAFFIC CONTROL PLAN AND PERMIT AT THE JOB SITE FOR INSPECTION AT ALL TIMES.
11. DURING PAVEMENT SURFACE RESTORATION PROJECTS; THE CONTRACTOR SHALL NOT OPEN CLOSED LANES UNTIL THE PAVEMENT SURFACE HAS CURED ENOUGH TO ALLOW VEHICULAR TRAFFIC ACCORDING TO CITY OF HOUSTON STANDARD SPECIFICATIONS.
12. THE CONTRACTOR IS RESPONSIBLE FOR SCHEDULING AND COORDINATING ALL CONSTRUCTION ACTIVITIES WITH STAKE HOLDERS IN THE VICINITY INCLUDING EMERGENCY RESPONSE AGENCIES SUCH AS HOUSTON POLICE DEPARTMENT, HOUSTON FIRE DEPARTMENT, AND METROPOLITAN TRANSIT AUTHORITY.
13. CONTRACTOR SHALL BE RESPONSIBLE FOR ISSUING ALL WORK DIRECTIVES TO ALL SUB-CONTRACTORS, UTILITY COMPANIES, AND ALL OTHER ENTITIES PERFORMING CONSTRUCTION WORK ASSOCIATED WITH THE PROJECT.
14. NOTHING IN THESE NOTES OR PLANS SHALL RELIEVE THE CONTRACTOR OF THE RESPONSIBILITY FOR JOB SITE CONDITIONS DURING THE COURSE OF CONSTRUCTION OF THE PROJECT; INCLUDING SAFETY OF ALL MODES OF TRANSPORTATION, PERSONS, AND PROPERTY, AND THAT THIS REQUIREMENT SHALL APPLY CONTINUOUSLY AND NOT BE LIMITED TO WORKING HOURS.
15. THE OFFICE OF CITY ENGINEER (MOBILITY PERMITS GROUP) PER THE DIRECTION OF THE CITY TRAFFIC ENGINEER HAVE THE RIGHT TO DEMAND THE INSTALLATION OF ADDITIONAL TRAFFIC CONTROL DEVICES OR MODIFICATIONS OF THESE PLANS AND NOTES, AS DEEMED NECESSARY TO PROMOTE THE SAFE AND EFFICIENT FLOW OF TRAFFIC, INCLUDING PEDESTRIANS AND BICYCLES, THROUGH THE CONSTRUCTION WORK ZONE. THE CONTRACTOR SHALL COMPLY WITH THESE ADDITIONAL REQUESTS OR MODIFICATIONS WITH DUE DILIGENCE.
16. ALL EXISTING TRAFFIC CONTROL SIGNS AND PAVEMENT MARKINGS SHALL BE MAINTAINED IN VISIBLE LOCATIONS DURING CONSTRUCTION UNLESS PRIOR WRITTEN APPROVAL IS OBTAINED FROM CITY OF HOUSTON PROJECT MANAGER. THE CONTRACTOR SHALL RESTORE OR REPLACE (AT THE DISCRETION OF THE CITY TRAFFIC ENGINEER) ANY PAVEMENT MARKING OR SIGNING DAMAGE DURING CONSTRUCTION OPERATIONS, INCLUDING RAISED PAVEMENT MARKERS (RPMS).
17. WHEN ENTERING OR LEAVING ROADWAYS CARRYING PUBLIC TRAFFIC, THE CONTRACTOR'S EQUIPMENT, WHETHER EMPTY OR LOADED SHALL IN ALL CASES YIELD TO PUBLIC TRAFFIC WITH THE ASSISTANCE OF CONTRACTOR PROVIDED CERTIFIED FLAGGER/PEACE OFFICER.
18. ACCESS TO DRIVEWAYS ADJACENT TO THE CONSTRUCTION WORK ZONE SHALL BE MAINTAINED AT ALL TIMES AS MUCH AS POSSIBLE. ADDITIONAL CONES AND/OR DELINEATORS MAY BE REQUIRED TO DELINEATE THE DRIVEWAY ACCESS ROUTE THROUGH THE CONSTRUCTION WORK ZONE. A DRIVEWAY SHALL BE CLOSED TO TRAFFIC ONLY FOR THE SHORTEST TIME NECESSARY, UNLESS PRIOR WRITTEN APPROVAL IS OBTAINED FROM CITY OF HOUSTON PROJECT MANAGER.
19. SPILLAGE RESULTING FROM HAULING OPERATIONS ALONG OR ACROSS ANY PUBLIC TRAVELED WAY SHALL BE REMOVED IMMEDIATELY BY THE CONTRACTOR.
20. THE CONTRACTOR SHALL SUBMIT AN APPLICATION FOR TEMPORARY PARKING RESTRICTIONS IF PHASE ARE PARKING WILL BE LOCATED AT THE PROPOSED LANE CLOSURES FROM PARKING ENFORCEMENT (PHONE: 832-394-6590) AT LEAST TEN BUSINESS DAYS BEFORE IMPLEMENTATION OF LANE CLOSURES. IN ADDITION, TEMPORARY NO PARKING SIGNS SHALL BE POSTED 24 HOURS PRIOR TO COMMENCEMENT OF WORK.
21. ADDITIONAL OFF DUTY OFFICERS/FLAGGERS MAY BE REQUESTED TO DIRECT TRAFFIC WHEN LANES ARE BLOCKED AT THE DISCRETION OF THE CITY PROJECT MANAGER EVEN IF THEY ARE NOT SPECIFICALLY IDENTIFIED ON THE PROJECT PLANS.
22. THE CONTRACTOR SHALL REPLACE WITHIN 72 HOURS, ALL TRAFFIC SIGNAL LOOP DETECTORS DAMAGED DURING CONSTRUCTION.
23. IN GENERAL, A SOLAR POWERED FLASHING ARROW BOARD SHALL BE REQUIRED ON ALL MAJOR THOROUGHFARE LANES CLOSURES. EXCEPTIONS TO FLASHING ARROW BOARDS AND/OR IMPLEMENTATION ON RESIDENTIAL LANE CLOSURES SHALL BE APPROVED BY CITY TRAFFIC ENGINEER.
24. APPROVED TRAFFIC CONTROL PLAN SHALL BE IN PLACE BEFORE STARTING ANY EXCAVATION.
25. WATER FILLED BARRIERS CAN BE USED AS INSTRUCTED BY THE ENGINEER AND APPROVED BY THE CITY FOR PROJECTS WHERE SPACE IS LIMITED AND HEAVY EQUIPMENT TO PLACE CONCRETE BARRIERS IS NOT FEASIBLE. WATER FILLED BARRIERS SHALL NOT BE USED ON ROADWAYS WITH A POSTED SPEED LIMIT MORE THAN 45 MPH.
26. WATER FILLED BARRIERS MUST BE INSTALLED AND MAINTAINED PER THE MANUFACTURER'S REQUIREMENTS AND ROUTINELY INSPECTED FOR DEFECTS.
27. IF WATER FILLED BARRIER IS PROVIDED, USE ENVIRONMENTALLY SAFE ANTI-FREEZING AGENT IN THE WATER WHEN IT IS APPLICABLE PER MANUFACTURER SPECIFICATIONS AND RECOVER AGENT WHEN THE BARRIER IS DRAINED.
28. DISPOSE OF WATER AND AGENT PROPERLY. DO NOT DRAIN WATER FILLED BARRIER INTO OR ACROSS AN EXISTING TRAVEL LANE.
29. PROVIDE BARRIER UNITS THAT ARE CAPABLE OF BEING LIFTED AND MOVED WHEN FILLED IF DRAINING IS NOT POSSIBLE.
30. PROVIDE WATER FILLED BARRIER THAT ACTS AS ITS OWN FREE STANDING, NON-REDIRECTIVE END TREATMENT.
31. WHEN WATER FILLED BARRIERS ARE USED TO CHANNELIZE PEDESTRIANS, THEY MUST HAVE A CONTINUOUS DETECTABLE BOTTOM FOR USERS OF LONG CANES AND THE TOP OF THE UNIT SHALL NOT BE LESS THAN 32 INCHES IN HEIGHT.
32. ANY CLOSURE OF A PEDESTRIAN OR BICYCLE FACILITY SHALL REQUIRE THE SHORTEST DETOUR THAT MAINTAINS THE SAFETY OF PEDESTRIAN AND/OR BICYCLISTS.

SPACING FOR CHANNELIZING DEVICES

A. PLASTIC DRUMS ON MERGING TAPER @ 30' C – C WITH CHEVRON SIGN @ 60' C – C AND WARNING LIGHTS FOR OVERNIGHT CLOSURE.

B. PLASTIC DRUMS ON DOWNSTREAM TAPER @ 30' C – C (RETURN TAPER AND BARRICADE ARE OPTIONAL AND DIVIDED ROADWAY SECTION)

C. PLASTIC DRUMS ON RADII @ 35' C –C.

D. PLASTIC DRUMS ON TANGENT @ 35' C – C WITH VERTICAL PANEL AT 70' C – C AND APPROVED WARNING LIGHT @ 70' C – C (FOR OVERNIGHT CLOSURE).

E. PLASTIC DRUMS IN FRONT OF CONSTRUCTION ZONE @ 20' C – C WITH VERTICAL PANEL AT 40' C – C AND APPROVED WARNING LIGHT @ 40' C – C (FOR OVERNIGHT CLOSURE).

F. CONCRETE TRAFFIC BARRIER (CTB) OR LOW PROFILE CONCRETE TRAFFIC BARRIER (LPCTB) WITH APPROVED REFLECTORS @ 10' C – C IF PAVEMENT DROP IS GREATER THAN 1 FOOT.

G. PLASTIC DRUMS W/GUARD RAIL MOUNTED.

H. SELF– RIGHTING VERTICAL PANEL SPACING.
– 4 LANES TO 2 LANES UNDIVIDED ROADWAY SECTION @ 20' C – C.
– 4 LANES DIVIDED ROADWAY TO ONE SIDE TWO WAY ROADWAY @ 20' C – C.
– LEFT LANE AND RIGHT LANE STORAGE BAYS @ 15' C – C.

I. SPACING SHOWN ON TRAFFIC CONTROL SHALL SUPERSEDE THE ABOVE SPACING.

J. SPACING MAY BE ADJUSTED TO PROVIDE DRIVEWAYS, INTERSECTIONS AND /OR MEDIAN OPENINGS.

TABLE C3 – TYPICAL SIGN SPACING, TAPER LENGTHS, AND SUGGESTED SPACING OF CHANNELIZATION DEVICES

POSTED SPEED (MPH)	SIGN SPACING "X" (FEET)	MIN. DESIRABLE TAPER LENGTH "L"			SUGGESTED MAXIMUM SPACING OF DEVICE	
		10' OFFSET	11' OFFSET	12' OFFSET	ON A TAPER	ON A TANGENT
30	120'	150'	165'	180'	30'	60'–75'
35	160'	205'	225'	245'	35'	70'–90'
40	240'	265'	295'	320'	40'	80'–100'
45	320'	450'	495'	540'	45'	90'–110'
50	400'	500'	550'	600'	50'	100'–125'
55	500'	550'	605'	660'	55'	110'–140'

TABLE C4 – STOPPING SIGHT DISTANCE AS A FUNCTION OF SPEED

POSTED SPEED (MPH)	DISTANCE "D" (FEET)
30	200
35	250
40	305
45	360
50	425
55	495

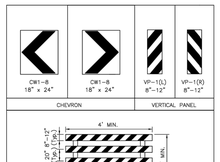

CHANNELIZATION AND BARRICADES

LEGEND:
- SIGN
- FLAGGER
- APPROVED CHANNELIZATION DEVICE
- BARRICADE
- FLASHING ARROW PANEL
- AREA UNDER CONSTRUCTION
- EXISTING TRAVEL WAY
- TRAFFIC CONTROL PLAN DETOUR TRAVEL WAY

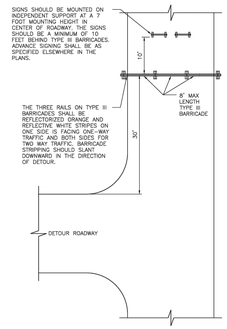

PLAN VIEW
TYPE III BARRICADE (POST AND SKID)
TYPICAL APPLICATION

APPROVED BY:	APPROVED BY:
Sukal Kanavar	Hang Nguyen
CITY ENGINEER	CITY TRAFFIC ENGINEER
APPROVED BY: Carl Haddock	
DIRECTOR OF HOUSTON PUBLIC WORKS	
EFF DATE: NOV–27–2023	DWG NO: 01555–01

CITY OF HOUSTON
HOUSTON PUBLIC WORKS STANDARD

TCP NOTES CHANNELIZING DEVICES AND BARRICADES

FOR CITY OF HOUSTON USE ONLY

DRAWING SCALE
NOT TO SCALE

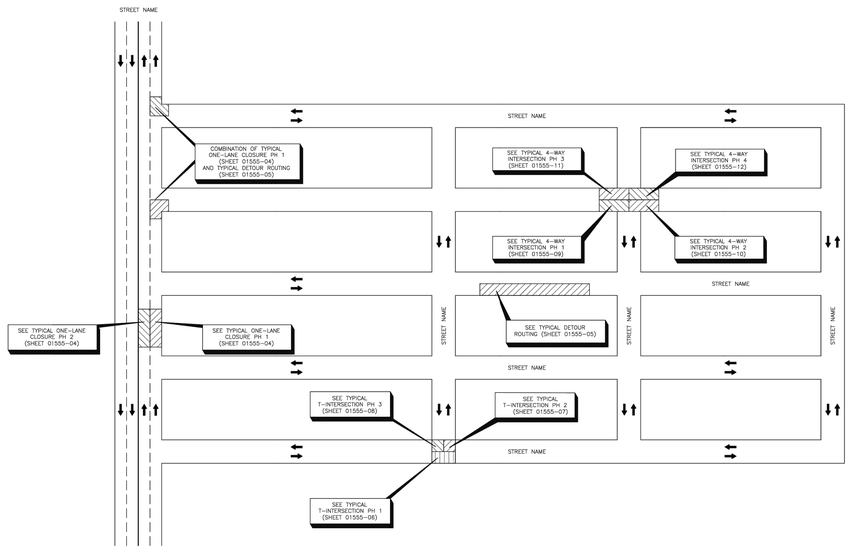

APPROVED BY:	APPROVED BY:
Sukal Kanavar	Hang Nguyen
CITY ENGINEER	CITY TRAFFIC ENGINEER
APPROVED BY: Carl Haddock	
DIRECTOR OF HOUSTON PUBLIC WORKS	
EFF DATE: NOV–27–2023	DWG NO: 01555–02

CITY OF HOUSTON
HOUSTON PUBLIC WORKS STANDARD

TCP OVERALL TRAFFIC CONTROL LAYOUT

FOR CITY OF HOUSTON USE ONLY

DRAWING SCALE
NOT TO SCALE

RPS
A TETRA TECH COMPANY
Texas PE Firm Reg. #F-929
575 N. Dairy Ashford, Suite 700,
Houston, Texas 77079
T +1 281 589 7257
E usinfrastructure@rpsgroup.com

SURVEYED BY: KUO Inc.
FB NO. F–4578

This document is released for the purposes of interim review only under the authority of:

Jeremy Austin, P.E.
Texas P.E. No. 116816
03/30/2026

It is not to be used for bidding, construction, or permitting purposes.

CITY OF HOUSTON
HOUSTON PUBLIC WORKS

RECONSTRUCTION & REHABILITATION COH LIFT STATIONS

TRAFFIC CONTROL DETAILS
(SHEET 1 OF 10)
STD–C–20

WBS NUMBER	FOR CITY OF HOUSTON USE ONLY
R–000267–0178–3	
DRAWING SCALE	
AS NOTED	
CITY OF HOUSTON PM	
TAHA LOTIA	
SHEET NO. 30 OF 268	

PLOTTED: 3/30/2026 4:32 PM
PLOT STYLE: Coh_ctb_230809.ctb
FILE NAME: TRAFFIC CONTROL DETAILS (SHEET 10 OF 10).dwg

PLOTTED: 3/30/2026 4:33 PM

PLOT STYLE: Coh_ctb_230809.ctb

FILE NAME: TRAFFIC CONTROL DETAILS (SHEET 10 OF 10).dwg

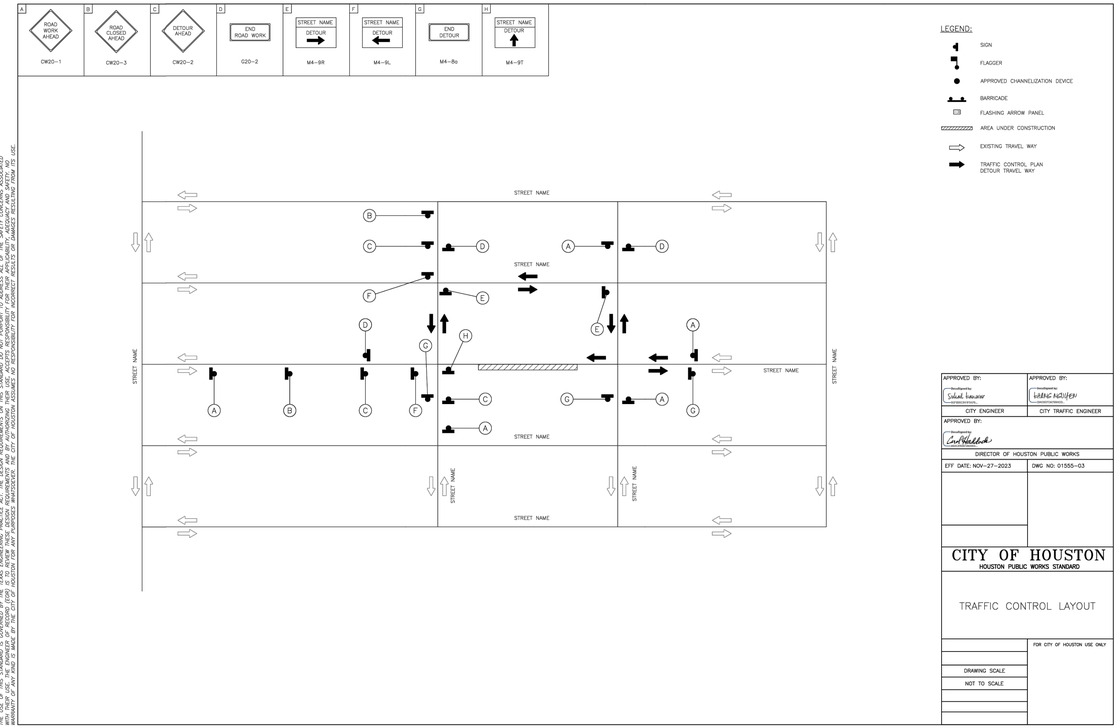

DISCLAIMER:
THE USE OF THIS STANDARD IS GOVERNED BY THE TEXAS ENGINEERING PRACTICE ACT. THE DESIGN REQUIREMENTS ON THIS STANDARD DO NOT PURPORT TO ADDRESS ALL OF THE SAFETY CONCERNS ASSOCIATED WITH THEIR USE. IT IS THE RESPONSIBILITY OF THE ENGINEER OF RECORD (EOR) TO SIZE, REVIEW AND/OR DESIGN ALL ELEMENTS SHOWN ON THIS STANDARD TO FIT SITE SPECIFIC CONDITIONS AND TO ENSURE COMPLIANCE WITH CITY OF HOUSTON AND OTHER APPLICABLE REQUIREMENTS AND BY AUTHORIZING THEIR USE, ACCEPTS RESPONSIBILITY FOR THEIR APPROPRIATE APPLICATION. THE EOR IS RESPONSIBLE FOR CORRECTLY INTERPRETING THE INTENT OF THE STANDARD AND FOR ADAPTING THE STANDARD TO SITE SPECIFIC CONDITIONS. THE CITY OF HOUSTON (COH) SHALL NOT BE RESPONSIBLE FOR THE MISUSE OF THIS STANDARD BY THE ENGINEER OF RECORD (EOR) AS TO REVIEW AND/OR DESIGN REQUIREMENTS AND BY AUTHORIZING THEIR USE, ACCEPTS RESPONSIBILITY FOR THEIR APPROPRIATE APPLICATION. THE EOR IS RESPONSIBLE FOR CORRECTLY INTERPRETING THE INTENT OF THE STANDARD AND FOR ADAPTING THE STANDARD TO SITE SPECIFIC CONDITIONS. THE CITY OF HOUSTON ASSUMES NO RESPONSIBILITY FOR INCORRECT RESULTS OR DAMAGES RESULTING FROM ITS USE.

LEGEND:

- SIGN
- FLAGGER
- APPROVED CHANNELIZATION DEVICE
- BARRICADE
- FLASHING ARROW PANEL
- AREA UNDER CONSTRUCTION
- EXISTING TRAVEL WAY
- TRAFFIC CONTROL PLAN DETOUR TRAVEL WAY

APPROVED BY: CITY ENGINEER	APPROVED BY: CITY TRAFFIC ENGINEER
APPROVED BY: DIRECTOR OF HOUSTON PUBLIC WORKS	
EFF DATE: NOV-27-2023	DWG NO: 01555-03

CITY OF HOUSTON
HOUSTON PUBLIC WORKS STANDARD

TRAFFIC CONTROL LAYOUT

FOR CITY OF HOUSTON USE ONLY

DRAWING SCALE
NOT TO SCALE

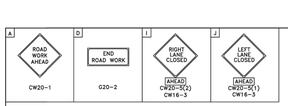

DISCLAIMER:
THE USE OF THIS STANDARD IS GOVERNED BY THE TEXAS ENGINEERING PRACTICE ACT. THE DESIGN REQUIREMENTS ON THIS STANDARD DO NOT PURPORT TO ADDRESS ALL OF THE SAFETY CONCERNS ASSOCIATED WITH THEIR USE. IT IS THE RESPONSIBILITY OF THE ENGINEER OF RECORD (EOR) TO SIZE, REVIEW AND/OR DESIGN ALL ELEMENTS SHOWN ON THIS STANDARD TO FIT SITE SPECIFIC CONDITIONS AND TO ENSURE COMPLIANCE WITH CITY OF HOUSTON AND OTHER APPLICABLE REQUIREMENTS AND BY AUTHORIZING THEIR USE, ACCEPTS RESPONSIBILITY FOR THEIR APPROPRIATE APPLICATION. THE EOR IS RESPONSIBLE FOR CORRECTLY INTERPRETING THE INTENT OF THE STANDARD AND FOR ADAPTING THE STANDARD TO SITE SPECIFIC CONDITIONS. THE CITY OF HOUSTON ASSUMES NO RESPONSIBILITY FOR INCORRECT RESULTS OR DAMAGES RESULTING FROM ITS USE.

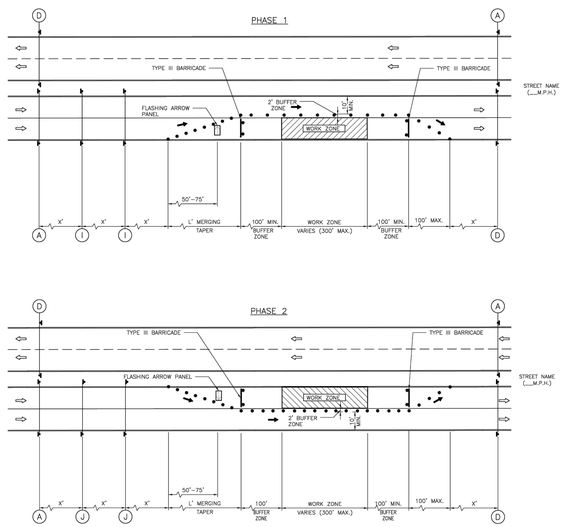

LEGEND:

- SIGN
- FLAGGER
- APPROVED CHANNELIZATION DEVICE
- BARRICADE
- FLASHING ARROW PANEL
- AREA UNDER CONSTRUCTION
- EXISTING TRAVEL WAY
- TRAFFIC CONTROL PLAN DETOUR TRAVEL WAY

NOTES:

1. RETURN TAPERS AND DOWNSTREAM BARRICADES ARE OPTIONAL ON A DIVIDED ROADWAY SECTION.
2. DOUBLE SIGNS SHALL BE USED ONLY ON ROADWAYS WITH MEDIANS.
3. FOR DIMENSIONS REFER TO SHEET 01555-01.
4. INSTALL FLASHERS ON DRUMS WHERE REQUIRED AND APPROVED BY CITY TRAFFIC ENGINEER.

APPROVED BY: CITY ENGINEER	APPROVED BY: CITY TRAFFIC ENGINEER
APPROVED BY: DIRECTOR OF HOUSTON PUBLIC WORKS	
EFF DATE: NOV-27-2023	DWG NO: 01555-04

CITY OF HOUSTON
HOUSTON PUBLIC WORKS STANDARD

TCP ONE LANE CLOSURE
PHASE 1 & 2

FOR CITY OF HOUSTON USE ONLY

DRAWING SCALE
NOT TO SCALE

RPS
A TETRA TECH COMPANY
Texas PE Firm Reg. #F-929
575 N. Dairy Ashford, Suite 700,
Houston, Texas 77079
T +1 281 589 7257
E usinfrastructure@rpsgroup.com

SURVEYED BY: KUO Inc.
FB NO. F-4578

This document is released for the purposes of interim review only under the authority of:

Jeremy Austin, P.E.
Texas P.E. No. 116816
03/30/2026

It is not to be used for bidding, construction, or permitting purposes.

CITY OF HOUSTON
HOUSTON PUBLIC WORKS

RECONSTRUCTION & REHABILITATION COH LIFT STATIONS

TRAFFIC CONTROL DETAILS
(SHEET 2 OF 10)
STD-C-21

WBS NUMBER	FOR CITY OF HOUSTON USE ONLY
R-000267-0178-3	
DRAWING SCALE	
AS NOTED	
CITY OF HOUSTON PM	
TAHA LOTIA	
SHEET NO. 31 OF 268	

DISCLAIMER:
THE USE OF THIS STANDARD IS GOVERNED BY THE TEXAS ENGINEERING PRACTICE ACT. THE DESIGN REQUIREMENTS ON THIS STANDARD DO NOT PURPORT TO ADDRESS ALL OF THE SAFETY CONCERNS ASSOCIATED WITH THEIR USE. THE ENGINEER OF RECORD (EOR) IS TO REVIEW THESE DESIGN REQUIREMENTS AND BY KNOWINGLY AND BY KNOWINGLY AND BY AUTHORIZING THEIR USE, ACCEPTS RESPONSIBILITY FOR PROPER APPLICATION, ADEQUACY AND SAFETY. NO RESPONSIBILITY FOR THE ENGINEER OF RECORD'S USE OF THIS STANDARD IS ASSUMED BY THE CITY OF HOUSTON (COH). THE EOR SHALL SUBMIT ALL DESIGNS PREPARED WITH THIS STANDARD UNDER THE SEAL OF A LICENSED PROFESSIONAL ENGINEER REGISTERED IN THE STATE OF TEXAS. THE EOR SHALL ADDRESS COMMENTS MADE BY THE CITY OF HOUSTON REVIEWERS. THE CITY OF HOUSTON MAY ADDRESS COMMENTS MADE BY THE EOR'S SEAL OF A LICENSED PROFESSIONAL ENGINEER REGISTERED IN THE STATE OF TEXAS. THE EOR SHALL ADDRESS COMMENTS MADE BY THE CITY OF HOUSTON REVIEWERS. THE CITY OF HOUSTON MAY REQUIRE REVISIONS TO PLANS PREPARED FOR PERMIT APPLICATIONS WHEN THE PLANS DO NOT COMPLY WITH THIS STANDARD. THE CITY OF HOUSTON MAY REQUIRE REVISIONS TO PLANS PREPARED FOR PERMIT APPLICATIONS WHEN THE PLANS DO NOT COMPLY WITH THIS STANDARD.

A	B	C	D	E	F	G	H	J	J
ROAD WORK AHEAD	ROAD CLOSED AHEAD	DETOUR AHEAD	END ROAD WORK	STREET NAME DETOUR	STREET NAME DETOUR	END DETOUR	STREET NAME DETOUR	RIGHT LANE CLOSED AHEAD	LEFT LANE CLOSED AHEAD
CW20-1	CW20-3	CW20-2	G20-2	M4-9R	M4-9L	M4-8o	M4-9T	CW20-5(2) CW16-3	CW20-5(1) CW16-3

K	L	M	N	O	P	Q	R
ONE WAY	ONE WAY	DO NOT ENTER	ROAD CLOSED	KEEP RIGHT			BEGIN ONE WAY
R6-2(L)	R6-2(R)	R5-1	R11-2	M4-10(L)	R3-1	R3-2	R6-6

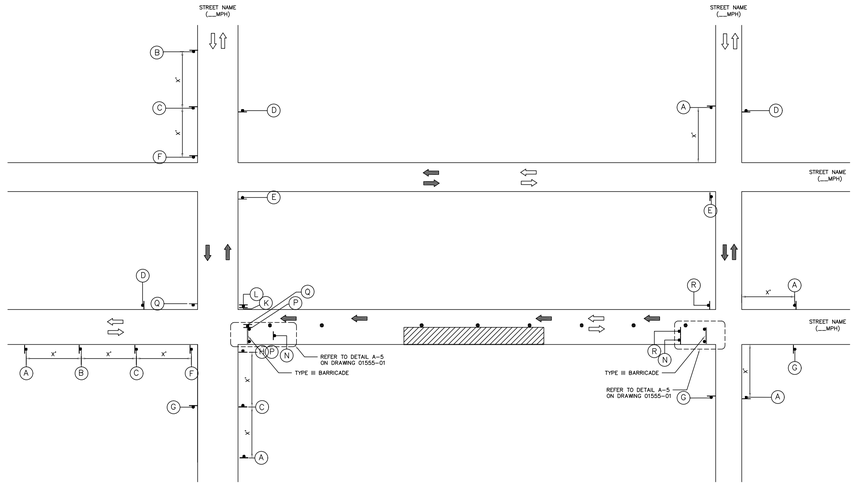

LEGEND:
- SIGN
- FLAGGER
- APPROVED CHANNELIZATION DEVICE
- BARRICADE
- FLASHING ARROW PANEL
- AREA UNDER CONSTRUCTION
- EXISTING TRAVEL WAY
- TRAFFIC CONTROL PLAN DETOUR TRAVEL WAY

NOTES:
1. A 10' MINIMUM LANE WIDTH FOR EMERGENCY SHALL BE MADE AVAILABLE AND MAINTAINED BY THE CONTRACTOR AT ALL TIMES.
2. FOR DIMENSIONS REFER TO SHEET 01555-01.
3. INSTALL FLASHERS ON DRUMS WHERE REQUIRED AND APPROVED BY CITY TRAFFIC ENGINEER.

APPROVED BY:	APPROVED BY:
CITY ENGINEER	CITY TRAFFIC ENGINEER
APPROVED BY:	
DIRECTOR OF HOUSTON PUBLIC WORKS	
EFF DATE: NOV-27-2023	DWG NO: 01555-05

CITY OF HOUSTON
HOUSTON PUBLIC WORKS STANDARD

TCP TYPICAL DETOUR ROUTING WITH ONE LANE CLOSURE (ONE BLOCK)

	FOR CITY OF HOUSTON USE ONLY
DRAWING SCALE	
NOT TO SCALE	

DISCLAIMER:
THE USE OF THIS STANDARD IS GOVERNED BY THE TEXAS ENGINEERING PRACTICE ACT. THE DESIGN REQUIREMENTS ON THIS STANDARD DO NOT PURPORT TO ADDRESS ALL OF THE SAFETY CONCERNS ASSOCIATED WITH THEIR USE. THE ENGINEER OF RECORD (EOR) IS TO REVIEW THESE DESIGN REQUIREMENTS AND BY KNOWINGLY AND BY AUTHORIZING THEIR USE, ACCEPTS RESPONSIBILITY FOR PROPER APPLICATION, ADEQUACY AND SAFETY. NO RESPONSIBILITY FOR THE ENGINEER OF RECORD'S USE OF THIS STANDARD IS ASSUMED BY THE CITY OF HOUSTON (COH). THE EOR SHALL SUBMIT ALL DESIGNS PREPARED WITH THIS STANDARD UNDER THE SEAL OF A LICENSED PROFESSIONAL ENGINEER REGISTERED IN THE STATE OF TEXAS. THE EOR SHALL ADDRESS COMMENTS MADE BY THE CITY OF HOUSTON REVIEWERS. THE CITY OF HOUSTON MAY REQUIRE REVISIONS TO PLANS PREPARED FOR PERMIT APPLICATIONS WHEN THE PLANS DO NOT COMPLY WITH THIS STANDARD.

A	T	U	D	M	N
ROAD WORK AHEAD	ONE LANE ROAD AHEAD		END ROAD WORK	DO NOT ENTER	ROAD CLOSED
CW20-1	CW20-4	CW20-7	G20-2	R5-1	R11-2

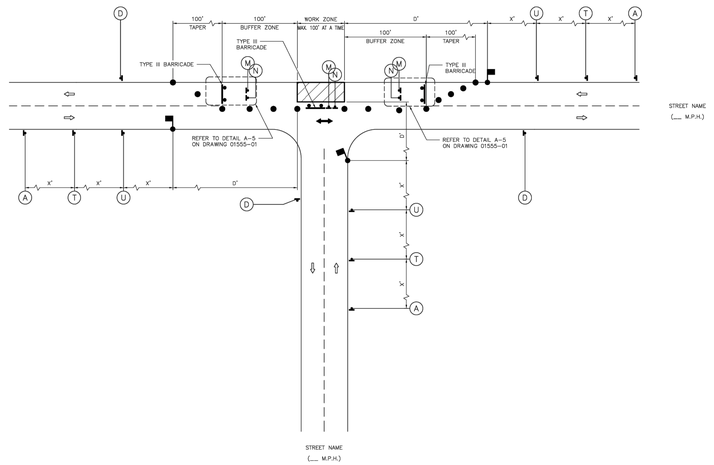

LEGEND:
- SIGN
- FLAGGER
- APPROVED CHANNELIZATION DEVICE
- BARRICADE
- FLASHING ARROW PANEL
- AREA UNDER CONSTRUCTION
- EXISTING TRAVEL WAY
- TRAFFIC CONTROL PLAN DETOUR TRAVEL WAY

NOTES:
1. MINOR WORK AND DAYTIME OPERATIONS ONLY.
2. REFER TO PROJECT SPECIFIC TRAFFIC CONTROL PLANS FOR MAJOR OPERATIONS AND OVERNIGHT LANE CLOSURES.
3. FOR DIMENSIONS REFER TO SHEET 01555-01.
4. INSTALL FLASHERS ON DRUMS WHERE REQUIRED AND APPROVED BY CITY TRAFFIC ENGINEER.
5. MAX. 100' WORK ZONE AT A TIME.

APPROVED BY:	APPROVED BY:
CITY ENGINEER	CITY TRAFFIC ENGINEER
APPROVED BY:	
DIRECTOR OF HOUSTON PUBLIC WORKS	
EFF DATE: NOV-27-2023	DWG NO: 01555-06

CITY OF HOUSTON
HOUSTON PUBLIC WORKS STANDARD

TCP TYPICAL CONSTRUCTION ZONE AT A T-INTERSECTION PHASE 1 OF 3

	FOR CITY OF HOUSTON USE ONLY
DRAWING SCALE	
NOT TO SCALE	

RPS
A TETRA TECH COMPANY
Texas PE Firm Reg. #F-929
575 N. Dairy Ashford, Suite 700,
Houston, Texas 77079
T +1 281 589 7257
E usinfrastructure@rpsgroup.com

SURVEYED BY: KUO Inc.
FB NO. F-4578

This document is released for the purposes of interim review only under the authority of:

Jeremy Austin, P.E.
Texas P.E. No. 116816
03/30/2026

It is not to be used for bidding, construction, or permitting purposes.

CITY OF HOUSTON
HOUSTON PUBLIC WORKS

RECONSTRUCTION & REHABILITATION
COH LIFT STATIONS

TRAFFIC CONTROL DETAILS
(SHEET 3 OF 10)
STD-C-22

WBS NUMBER	FOR CITY OF HOUSTON USE ONLY
R-000267-0178-3	
DRAWING SCALE	
AS NOTED	
CITY OF HOUSTON PM	
TAHA LOTIA	
SHEET NO. 32 OF 268	

PLOTTED: 3/30/2026 4:33 PM
PLOT STYLE: Coh_ctb_230809.ctb
FILE NAME: TRAFFIC CONTROL DETAILS (SHEET 10 OF 10).dwg

PLOTTED: 3/30/2026 4:33 PM
PLOT STYLE: Coh_ctb_230809.ctb
FILE NAME: TRAFFIC CONTROL DETAILS (SHEET 10 OF 10).dwg

DISCLAIMER:
THE USE OF THIS STANDARD IS GOVERNED BY THE TEXAS ENGINEERING PRACTICE ACT. THE DESIGN REQUIREMENTS ON THIS STANDARD DO NOT PURPORT TO ADDRESS ALL OF THE SAFETY CONCERNS ASSOCIATED WITH THEIR USE. IT IS THE RESPONSIBILITY OF THE DESIGN ENGINEER, WHO PREPARES PLANS INCORPORATING THIS STANDARD, TO REVIEW THESE DESIGN REQUIREMENTS AND BY APPROVING THEIR USE ACCEPTS RESPONSIBILITY FOR THEIR APPROPRIATE, ACCURATE AND SAFETY INCLUSION IN THE PLANS. IT IS ALSO THE RESPONSIBILITY OF THE ENGINEER TO ASSURE THAT ANY MODIFICATIONS TO THESE STANDARDS ARE APPROPRIATE FOR THE CONDITIONS OF USE. THE CITY OF HOUSTON ASSUMES NO RESPONSIBILITY FOR ACCIDENTS OR DAMAGES RESULTING FROM THE USE OF THESE STANDARDS WITHOUT SUCH REVIEW AND MODIFICATIONS AS MAY BE NECESSARY.

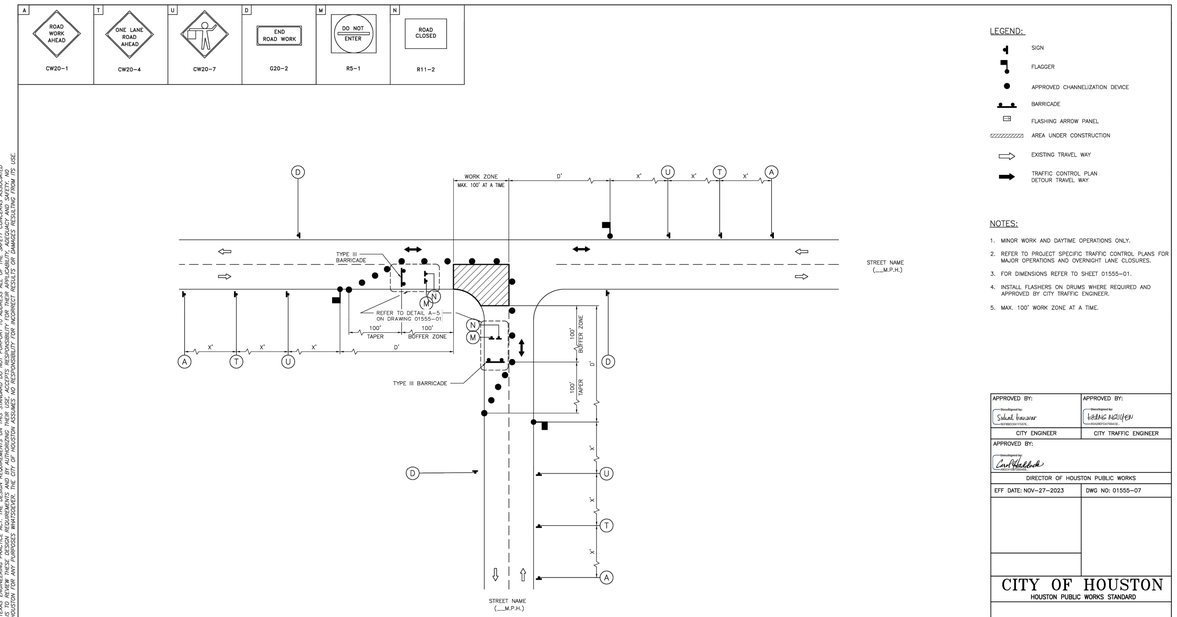

LEGEND:

- SIGN
- FLAGGER
- APPROVED CHANNELIZATION DEVICE
- BARRICADE
- FLASHING ARROW PANEL
- AREA UNDER CONSTRUCTION
- EXISTING TRAVEL WAY
- TRAFFIC CONTROL PLAN DETOUR TRAVEL WAY

NOTES:

1. MINOR WORK AND DAYTIME OPERATIONS ONLY.
2. REFER TO PROJECT SPECIFIC TRAFFIC CONTROL PLANS FOR MAJOR OPERATIONS AND OVERNIGHT LANE CLOSURES.
3. FOR DIMENSIONS REFER TO SHEET 01555-01.
4. INSTALL FLASHERS ON DRUMS WHERE REQUIRED AND APPROVED BY CITY TRAFFIC ENGINEER.
5. MAX. 100' WORK ZONE AT A TIME.

APPROVED BY:	APPROVED BY:
Suhail Kanwar	Hiral Patel
CITY ENGINEER	CITY TRAFFIC ENGINEER
APPROVED BY:	
Carol Haddock	
DIRECTOR OF HOUSTON PUBLIC WORKS	
EFF DATE: NOV-27-2023	DWG NO: 01555-07

CITY OF HOUSTON
HOUSTON PUBLIC WORKS STANDARD

TCP TYPICAL CONSTRUCTION ZONE AT A T-INTERSECTION PHASE 2 OF 3

	FOR CITY OF HOUSTON USE ONLY
DRAWING SCALE	
NOT TO SCALE	

DISCLAIMER:
THE USE OF THIS STANDARD IS GOVERNED BY THE TEXAS ENGINEERING PRACTICE ACT. THE DESIGN REQUIREMENTS ON THIS STANDARD DO NOT PURPORT TO ADDRESS ALL OF THE SAFETY CONCERNS ASSOCIATED WITH THEIR USE. IT IS THE RESPONSIBILITY OF THE DESIGN ENGINEER, WHO PREPARES PLANS INCORPORATING THIS STANDARD, TO REVIEW THESE DESIGN REQUIREMENTS AND BY APPROVING THEIR USE ACCEPTS RESPONSIBILITY FOR THEIR APPROPRIATE, ACCURATE AND SAFETY INCLUSION IN THE PLANS. IT IS ALSO THE RESPONSIBILITY OF THE ENGINEER TO ASSURE THAT ANY MODIFICATIONS TO THESE STANDARDS ARE APPROPRIATE FOR THE CONDITIONS OF USE. THE CITY OF HOUSTON ASSUMES NO RESPONSIBILITY FOR ACCIDENTS OR DAMAGES RESULTING FROM THE USE OF THESE STANDARDS WITHOUT SUCH REVIEW AND MODIFICATIONS AS MAY BE NECESSARY.

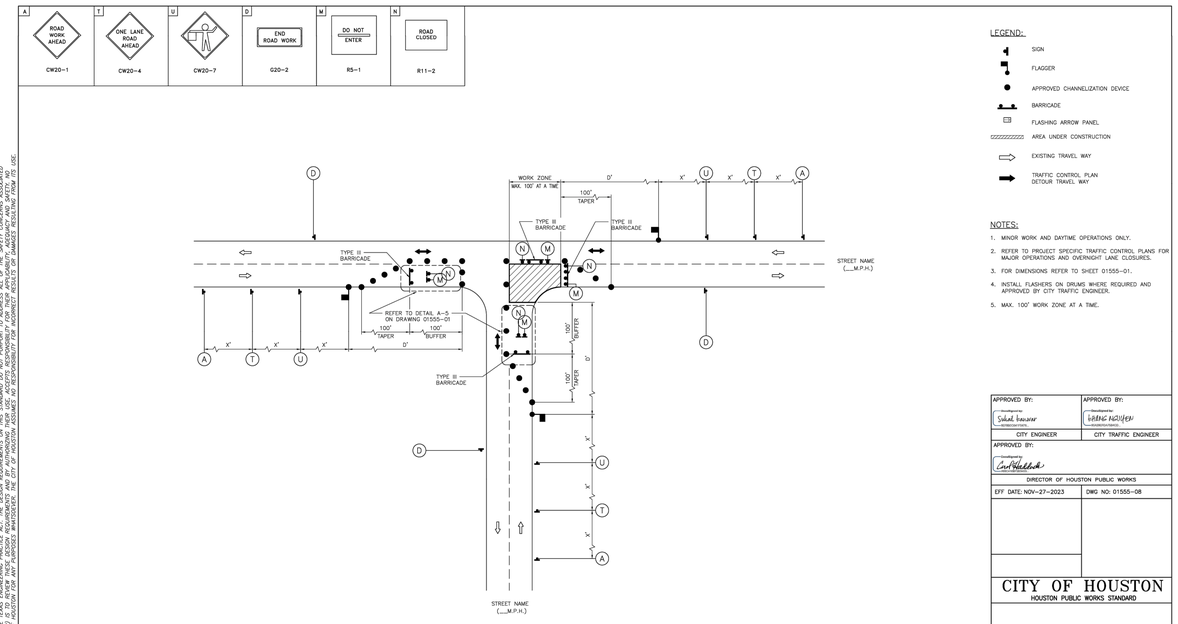

LEGEND:

- SIGN
- FLAGGER
- APPROVED CHANNELIZATION DEVICE
- BARRICADE
- FLASHING ARROW PANEL
- AREA UNDER CONSTRUCTION
- EXISTING TRAVEL WAY
- TRAFFIC CONTROL PLAN DETOUR TRAVEL WAY

NOTES:

1. MINOR WORK AND DAYTIME OPERATIONS ONLY.
2. REFER TO PROJECT SPECIFIC TRAFFIC CONTROL PLANS FOR MAJOR OPERATIONS AND OVERNIGHT LANE CLOSURES.
3. FOR DIMENSIONS REFER TO SHEET 01555-01.
4. INSTALL FLASHERS ON DRUMS WHERE REQUIRED AND APPROVED BY CITY TRAFFIC ENGINEER.
5. MAX. 100' WORK ZONE AT A TIME.

APPROVED BY:	APPROVED BY:
Suhail Kanwar	Hiral Patel
CITY ENGINEER	CITY TRAFFIC ENGINEER
APPROVED BY:	
Carol Haddock	
DIRECTOR OF HOUSTON PUBLIC WORKS	
EFF DATE: NOV-27-2023	DWG NO: 01555-08

CITY OF HOUSTON
HOUSTON PUBLIC WORKS STANDARD

TCP TYPICAL CONSTRUCTION ZONE AT A T-INTERSECTION PHASE 3 OF 3

	FOR CITY OF HOUSTON USE ONLY
DRAWING SCALE	
NOT TO SCALE	

RPS
A TETRA TECH COMPANY
Texas PE Firm Reg. #F-929
575 N. Dairy Ashford, Suite 700,
Houston, Texas 77079
T +1 281 589 7257
E usinfrastructure@rpsgroup.com

SURVEYED BY: KUO Inc.
FB NO. F-4578

This document is released for the purposes of interim review only under the authority of:

Jeremy Austin, P.E.
Texas P.E. No. 116816
03/30/2026

It is not to be used for bidding, construction, or permitting purposes.

CITY OF HOUSTON
HOUSTON PUBLIC WORKS

RECONSTRUCTION & REHABILITATION COH LIFT STATIONS

TRAFFIC CONTROL DETAILS
(SHEET 4 OF 10)
STD-C-23

WBS NUMBER	FOR CITY OF HOUSTON USE ONLY
R-000267-0178-3	
DRAWING SCALE	
AS NOTED	
CITY OF HOUSTON PM	
TAHA LOTIA	
SHEET NO. 33 OF 268	

PLOTTED: 3/30/2026 4:33 PM
PLOT STYLE: Coh_ctb_230809.ctb
FILE NAME: TRAFFIC CONTROL DETAILS (SHEET 10 OF 10).dwg

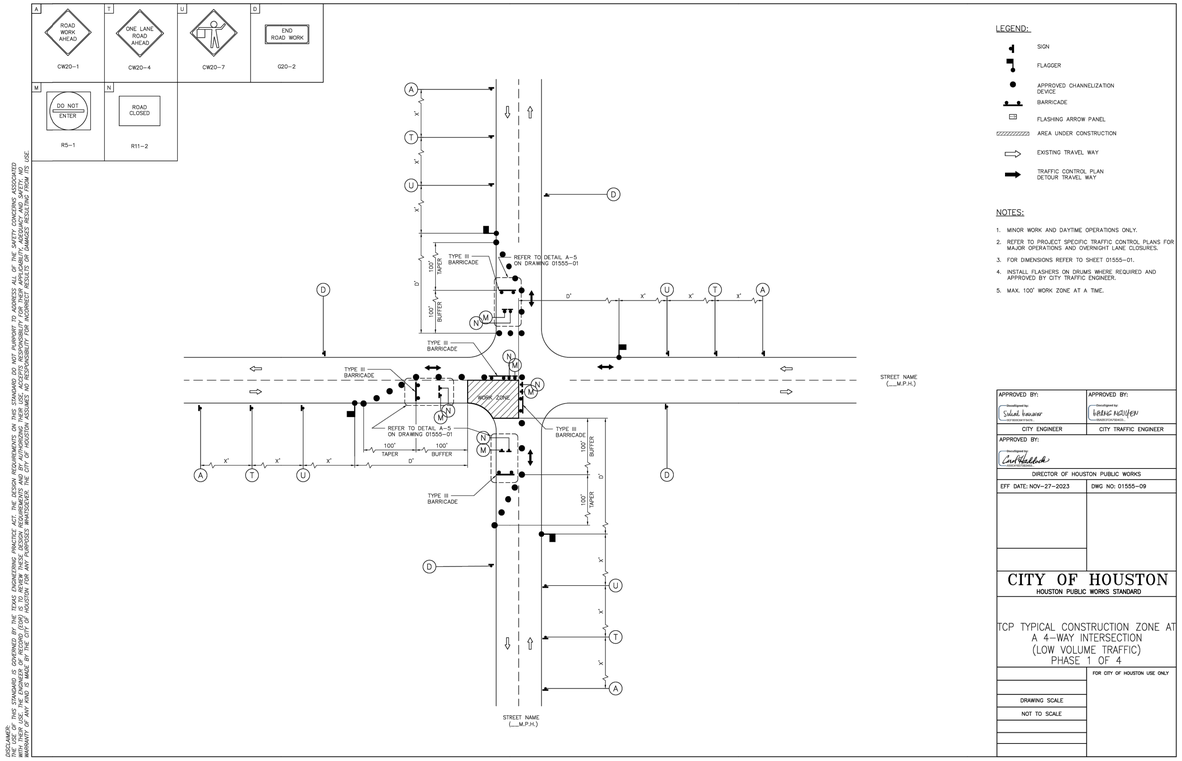

DISCLAIMER:
THE USE OF THIS STANDARD IS GOVERNED BY THE TEXAS ENGINEERING PRACTICE ACT. THE DESIGN REQUIREMENTS ON THIS STANDARD DO NOT PURPORT TO ADDRESS ALL OF THE SAFETY CONCERNS ASSOCIATED WITH THEIR USE. THE ENGINEER OF RECORD (EOR) IS TO REVIEW THESE DESIGN REQUIREMENTS AND BY AUTHORIZING THEIR USE, ACCEPTS RESPONSIBILITY FOR THEIR APPLICABILITY, ADEQUACY AND SAFETY. NO WARRANTY OF ANY KIND IS MADE BY THE CITY OF HOUSTON FOR ANY DESIGNS, DETAILS, OR STANDARDS PROVIDED TO BE INCORPORATED INTO PROJECTS PERFORMED FOR THE CITY OF HOUSTON. BY PROVIDING THESE DESIGNS, DETAILS AND STANDARDS, THE CITY OF HOUSTON IS NOT ASSUMING RESPONSIBILITY FOR PROJECT DESIGN OR CONSTRUCTION NOR DOES IT ASSUME LIABILITY FOR DAMAGES RESULTING FROM THEIR USE.

LEGEND:

- SIGN
- FLAGGER
- APPROVED CHANNELIZATION DEVICE
- BARRICADE
- FLASHING ARROW PANEL
- AREA UNDER CONSTRUCTION
- EXISTING TRAVEL WAY
- TRAFFIC CONTROL PLAN DETOUR TRAVEL WAY

NOTES:

1. MINOR WORK AND DAYTIME OPERATIONS ONLY.
2. REFER TO PROJECT SPECIFIC TRAFFIC CONTROL PLANS FOR MAJOR OPERATIONS AND OVERNIGHT LANE CLOSURES.
3. FOR DIMENSIONS REFER TO SHEET 01555-01.
4. INSTALL FLASHERS ON DRUMS WHERE REQUIRED AND APPROVED BY CITY TRAFFIC ENGINEER.
5. MAX. 100' WORK ZONE AT A TIME.

APPROVED BY:	APPROVED BY:
Salud Lozano	Ludmig Nguyen
CITY ENGINEER	CITY TRAFFIC ENGINEER
APPROVED BY: Carl Haddock	
DIRECTOR OF HOUSTON PUBLIC WORKS	
EFF DATE: NOV-27-2023	DWG NO: 01555-09

CITY OF HOUSTON
HOUSTON PUBLIC WORKS STANDARD

TCP TYPICAL CONSTRUCTION ZONE AT A 4-WAY INTERSECTION (LOW VOLUME TRAFFIC) PHASE 1 OF 4

	FOR CITY OF HOUSTON USE ONLY
DRAWING SCALE	
NOT TO SCALE	

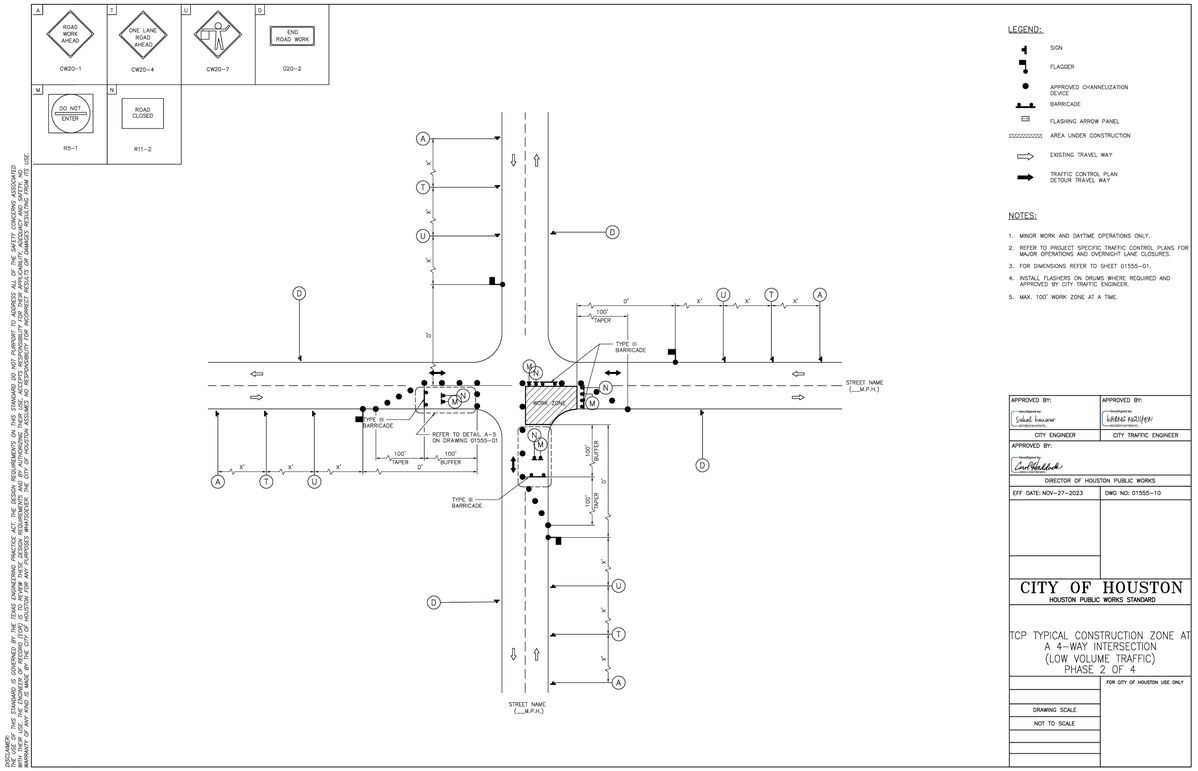

DISCLAIMER:
THE USE OF THIS STANDARD IS GOVERNED BY THE TEXAS ENGINEERING PRACTICE ACT. THE DESIGN REQUIREMENTS ON THIS STANDARD DO NOT PURPORT TO ADDRESS ALL OF THE SAFETY CONCERNS ASSOCIATED WITH THEIR USE. THE ENGINEER OF RECORD (EOR) IS TO REVIEW THESE DESIGN REQUIREMENTS AND BY AUTHORIZING THEIR USE, ACCEPTS RESPONSIBILITY FOR THEIR APPLICABILITY, ADEQUACY AND SAFETY. NO WARRANTY OF ANY KIND IS MADE BY THE CITY OF HOUSTON FOR ANY DESIGNS, DETAILS, OR STANDARDS PROVIDED TO BE INCORPORATED INTO PROJECTS PERFORMED FOR THE CITY OF HOUSTON. BY PROVIDING THESE DESIGNS, DETAILS AND STANDARDS, THE CITY OF HOUSTON IS NOT ASSUMING RESPONSIBILITY FOR PROJECT DESIGN OR CONSTRUCTION NOR DOES IT ASSUME LIABILITY FOR DAMAGES RESULTING FROM THEIR USE.

LEGEND:

- SIGN
- FLAGGER
- APPROVED CHANNELIZATION DEVICE
- BARRICADE
- FLASHING ARROW PANEL
- AREA UNDER CONSTRUCTION
- EXISTING TRAVEL WAY
- TRAFFIC CONTROL PLAN DETOUR TRAVEL WAY

NOTES:

1. MINOR WORK AND DAYTIME OPERATIONS ONLY.
2. REFER TO PROJECT SPECIFIC TRAFFIC CONTROL PLANS FOR MAJOR OPERATIONS AND OVERNIGHT LANE CLOSURES.
3. FOR DIMENSIONS REFER TO SHEET 01555-01.
4. INSTALL FLASHERS ON DRUMS WHERE REQUIRED AND APPROVED BY CITY TRAFFIC ENGINEER.
5. MAX. 100' WORK ZONE AT A TIME.

APPROVED BY:	APPROVED BY:
Salud Lozano	Ludmig Nguyen
CITY ENGINEER	CITY TRAFFIC ENGINEER
APPROVED BY: Carl Haddock	
DIRECTOR OF HOUSTON PUBLIC WORKS	
EFF DATE: NOV-27-2023	DWG NO: 01555-10

CITY OF HOUSTON
HOUSTON PUBLIC WORKS STANDARD

TCP TYPICAL CONSTRUCTION ZONE AT A 4-WAY INTERSECTION (LOW VOLUME TRAFFIC) PHASE 2 OF 4

	FOR CITY OF HOUSTON USE ONLY
DRAWING SCALE	
NOT TO SCALE	

A TETRA TECH COMPANY
Texas PE Firm Reg. #F-929
575 N. Dairy Ashford, Suite 700,
Houston, Texas 77079
T +1 281 589 7257
E usinfrastructure@rpsgroup.com

SURVEYED BY: KUO Inc.
FB NO. F-4578

This document is released for the purposes of interim review only under the authority of:

Jeremy Austin, P.E.
Texas P.E. No. 116816
03/30/2026

It is not to be used for bidding, construction, or permitting purposes.

CITY OF HOUSTON
HOUSTON PUBLIC WORKS

RECONSTRUCTION & REHABILITATION COH LIFT STATIONS

TRAFFIC CONTROL DETAILS
(SHEET 5 OF 10)
STD-C-24

WBS NUMBER	FOR CITY OF HOUSTON USE ONLY
R-000267-0178-3	
DRAWING SCALE	
AS NOTED	
CITY OF HOUSTON PM	
TAHA LOTIA	
SHEET NO. 34 OF 268	

PLOT STYLE: Coh_ctb_230809.ctb
PLOTTED: 3/30/2026 4:33 PM
FILE NAME: TRAFFIC CONTROL DETAILS (SHEET 10 OF 10).dwg

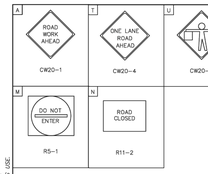

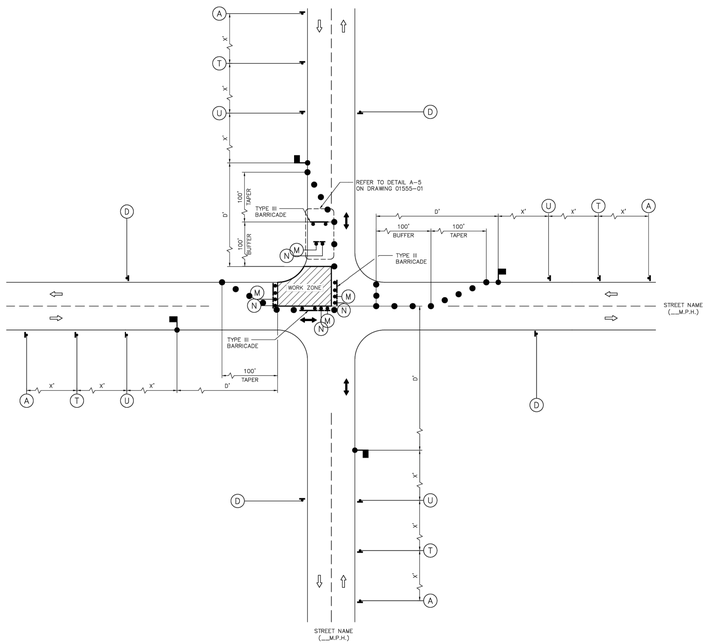

LEGEND:

- SIGN
- FLAGGER
- APPROVED CHANNELIZATION DEVICE
- BARRICADE
- FLASHING ARROW PANEL
- AREA UNDER CONSTRUCTION
- EXISTING TRAVEL WAY
- TRAFFIC CONTROL PLAN DETOUR TRAVEL WAY

NOTES:

1. MINOR WORK AND DAYTIME OPERATIONS ONLY.
2. REFER TO PROJECT SPECIFIC TRAFFIC CONTROL PLANS FOR MAJOR OPERATIONS AND OVERNIGHT LANE CLOSURES.
3. FOR DIMENSIONS REFER TO SHEET 01555-01.
4. INSTALL FLASHERS ON DRUMS WHERE REQUIRED AND APPROVED BY CITY TRAFFIC ENGINEER.
5. MAX. 100' WORK ZONE AT A TIME.

APPROVED BY:	APPROVED BY:
Salad Hassan	Ishaq Nathen
CITY ENGINEER	CITY TRAFFIC ENGINEER

APPROVED BY:

Carol Haddock

DIRECTOR OF HOUSTON PUBLIC WORKS

EFF DATE: NOV-27-2023	DWG NO: 01555-11

CITY OF HOUSTON
HOUSTON PUBLIC WORKS STANDARD

TCP TYPICAL CONSTRUCTION ZONE AT A 4-WAY INTERSECTION (LOW VOLUME TRAFFIC) PHASE 3 OF 4

FOR CITY OF HOUSTON USE ONLY

DRAWING SCALE
NOT TO SCALE

DISCLAIMER:
THE USE OF THIS STANDARD IS GOVERNED BY THE TEXAS ENGINEERING PRACTICE ACT. THE DESIGN REQUIREMENTS ON THIS STANDARD DO NOT PURPORT TO ADDRESS ALL OF THE SAFETY CONCERNS ASSOCIATED WITH THEIR USE. THE ENGINEER OF RECORD (EOR) IS TO REVIEW THESE DESIGN REQUIREMENTS AND BY AUTHORIZING THEIR USE, ACCEPTS RESPONSIBILITY FOR INCORRECT RESULTS OR DAMAGES RESULTING FROM ITS USE.

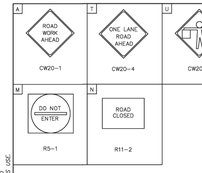

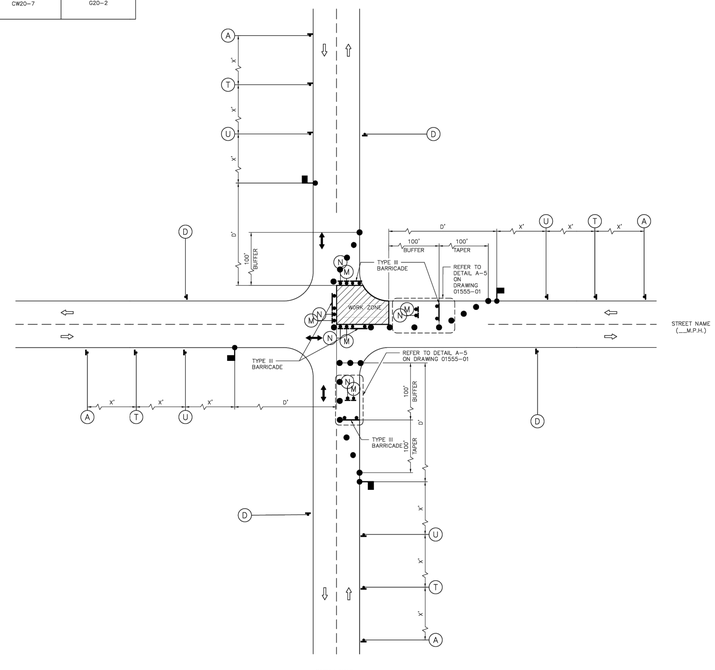

LEGEND:

- SIGN
- FLAGGER
- APPROVED CHANNELIZATION DEVICE
- BARRICADE
- FLASHING ARROW PANEL
- AREA UNDER CONSTRUCTION
- EXISTING TRAVEL WAY
- TRAFFIC CONTROL PLAN DETOUR TRAVEL WAY

NOTES:

1. MINOR WORK AND DAYTIME OPERATIONS ONLY.
2. REFER TO PROJECT SPECIFIC TRAFFIC CONTROL PLANS FOR MAJOR OPERATIONS AND OVERNIGHT LANE CLOSURES.
3. FOR DIMENSIONS REFER TO SHEET 01555-01.
4. INSTALL FLASHERS ON DRUMS WHERE REQUIRED AND APPROVED BY CITY TRAFFIC ENGINEER.
5. MAX. 100' WORK ZONE AT A TIME.

APPROVED BY:	APPROVED BY:
Salad Hassan	Ishaq Nathen
CITY ENGINEER	CITY TRAFFIC ENGINEER

APPROVED BY:

Carol Haddock

DIRECTOR OF HOUSTON PUBLIC WORKS

EFF DATE: NOV-27-2023	DWG NO: 01555-12

CITY OF HOUSTON
HOUSTON PUBLIC WORKS STANDARD

TCP TYPICAL CONSTRUCTION ZONE AT A 4-WAY INTERSECTION (LOW VOLUME TRAFFIC) PHASE 4 OF 4

FOR CITY OF HOUSTON USE ONLY

DRAWING SCALE
NOT TO SCALE

DISCLAIMER:
THE USE OF THIS STANDARD IS GOVERNED BY THE TEXAS ENGINEERING PRACTICE ACT. THE DESIGN REQUIREMENTS ON THIS STANDARD DO NOT PURPORT TO ADDRESS ALL OF THE SAFETY CONCERNS ASSOCIATED WITH THEIR USE. THE ENGINEER OF RECORD (EOR) IS TO REVIEW THESE DESIGN REQUIREMENTS AND BY AUTHORIZING THEIR USE, ACCEPTS RESPONSIBILITY FOR INCORRECT RESULTS OR DAMAGES RESULTING FROM ITS USE.
ANY MODIFICATION OF THIS STANDARD OR ANY USE OF THIS STANDARD FOR PURPOSES OTHER THAN THOSE FOR WHICH IT WAS INTENDED, WITHOUT THE WRITTEN CONSENT OF THE CITY OF HOUSTON, IS AT THE SOLE RISK OF THE PARTY MODIFYING OR USING THE STANDARD FOR SUCH OTHER PURPOSES. THERE IS NO WARRANTY OF ANY KIND IS MADE BY THE CITY OF HOUSTON FOR ANY PURPOSES WHATSOEVER. THE CITY OF HOUSTON ASSUMES NO RESPONSIBILITY FOR INCORRECT RESULTS OR DAMAGES RESULTING FROM ITS USE.

RPS
A TETRA TECH COMPANY
Texas PE Firm Reg. #F-929
575 N. Dairy Ashford, Suite 700,
Houston, Texas 77079
T +1 281 589 7257
E usinfrastructure@rpsgroup.com

SURVEYED BY: KUO Inc.
FB NO. F-4578

This document is released for the purposes of interim review only under the authority of:

Jeremy Austin, P.E.
Texas P.E. No. 116816
03/30/2026

It is not to be used for bidding, construction, or permitting purposes.

CITY OF HOUSTON
HOUSTON PUBLIC WORKS

RECONSTRUCTION & REHABILITATION COH LIFT STATIONS

TRAFFIC CONTROL DETAILS
(SHEET 6 OF 10)
STD-C-25

WBS NUMBER	FOR CITY OF HOUSTON USE ONLY
R-000267-0178-3	
DRAWING SCALE	
AS NOTED	
CITY OF HOUSTON PM	
TAHA LOTIA	
SHEET NO. 35 OF 268	

PLOTTED: 3/30/2026 4:33 PM
PLOT STYLE: Coh_ctb_230809.ctb
FILE NAME: TRAFFIC CONTROL DETAILS (SHEET 10 OF 10).dwg

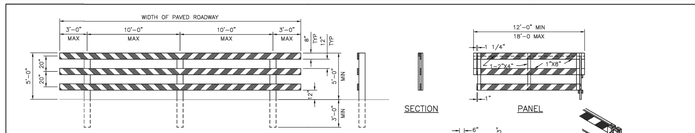

TYPE III BARRICADE
FOR END OF ROAD

FOR TYPE III BARRICADE FOR END OF ROAD, THE THREE (3) RAILS SHALL BE REFLECTIVE RED AND REFLECTIVE WHITE STRIPES ON SIDE FACING TRAFFIC

SECTION PANEL

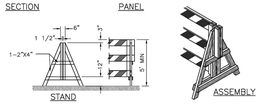

STAND ASSEMBLY

DEMOUNTABLE TYPE III BARRICADE

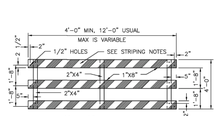

PANEL FOR TYPE III BARRICADE

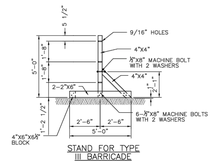

STAND FOR TYPE III BARRICADE

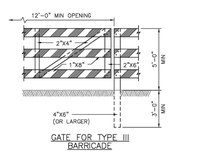

GATE FOR TYPE III BARRICADE



"A" FRAME

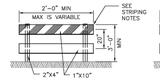

TYPE I

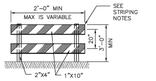

TYPE II

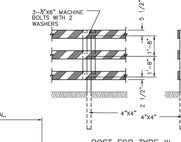

POST FOR TYPE III BARRICADE



DEMOUNTABLE

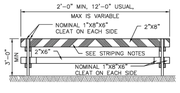

TYPE I

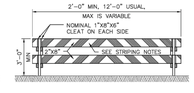

TYPE II

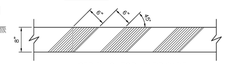

STRIPING FOR BARRICADE

BARRICADE NOTES:

1. THE MOST RECENT EDITION OF THE TEXAS MANUAL ON UNIFORM TRAFFIC CONTROL DEVICES, AND IT'S REVISIONS, SHALL GOVERN THE CONSTRUCTION AND USE OF ALL ITEMS HEREIN DESCRIBED.
2. CHANNELIZATION DEVICES OTHER THAN BARRICADES SHOULD NORMALLY BE USED FOR CHANNELIZATION PURPOSES.
3. BARRICADES SHOULD NORMALLY BE PLACED PERPENDICULAR TO THE TRAFFIC FLOW. OTHER CHANNELIZING DEVICES, SUCH AS DRUMS, VERTICAL PANELS OR PORTABLE BARRIERS, SHOULD BE USED WHERE NEEDED TO SEPARATE TRAFFIC FROM THE WORK AREA. IN ALL CASES, THE BARRICADES SHOULD BE SO PLACED AS TO MOST ADVANTAGEOUSLY WARN AND DIRECT TRAFFIC.
4. BARRICADES MAY BE DESIGNED AND CONSTRUCTED FROM WOOD OR ANY OTHER SUITABLE MATERIAL APPROVED BY THE TMUTCD. THE DETAILS SHOWN ON THIS STANDARD FOR TYPE I AND II ARE SUGGESTED DETAILS FOR WOOD SUPPORT SYSTEMS FOR BARRICADES. THE DETAILS OF RAIL WIDTH AND STRIPING, NUMBER AND SPACING OF RAILS, MINIMUM LENGTH AND HEIGHT (ABOVE PAVEMENT) OF RAILS MUST BE ADHERED TO WHEN ALTERNATE DESIGNS ARE USED.
5. BARRICADES ARE TO BE CONSTRUCTED OF CLEAN SOUND MATERIAL. ALL SURFACES ABOVE GROUND, WHICH ARE NOT STRIPED, SHALL BE WHITE EXCEPT THE UNPAINTED GALVANIZED METAL PARTS. ALL SURFACES OF WOOD OR METAL COMPONENTS MADE OF LUMBER SHALL BE PAINTED WITH A MINIMUM OF TWO COATS OF AN APPROVED BRAND OF WHITE PAINT TO SECURE THOROUGH COVERAGE AND A UNIFORM WHITE COLOR.
6. THE REFLECTORIZED WHITE AND REFLECTORIZED ORANGE (REFLECTORIZED RED) STRIPES FOR BARRICADES, DRUMS AND VERTICAL PANELS SHALL BE CONSTRUCTED OF HIGH INTENSITY SHEETING AND SHALL BE MAINTAINED TO MEET THE PERFORMANCE, COLOR AND REFLECTIVITY REQUIREMENTS SET BY DOT.
7. THE CONTRACTOR SHALL MAINTAIN EACH BARRICADE IN A CLEAN AND GOOD CONDITION.
8. BARRICADES SHALL BE REMOVED UPON COMPLETION OF THE WORK AND/OR THE ELIMINATION OF THE HAZARD ON ANY SECTION.

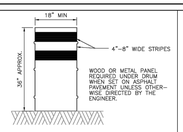

DRUMS

1. DRUMS, SET ON END, AND USED FOR TRAFFIC WARNING OR CHANNELIZATION SHALL BE APPROX. 36" IN HEIGHT WITH A MINIMUM 18" IN DIAMETER. THE CONTRACTOR, AT HIS OPTION, MAY USE DRUMS MADE FROM STEEL BARRELS OR BLACK POLYETHYLENE PLASTIC DRUM LINERS WEIGHING APPROX EIGHT POUNDS EACH. THE MARKINGS ON DRUMS SHALL BE HORIZONTAL, CIRCUMFERENTIAL, REFLECTORIZED ORANGE AND REFLECTORIZED WHITE STRIPES 4" TO 8" WIDE WITH 4" TO 8" SPACING BETWEEN STRIPES. THERE SHALL BE WITHIN TWO (2) INCHES OF THE TOP OF THE DRUM THERE SHALL BE AT LEAST TWO ORANGE AND TWO WHITE STRIPES ON EACH DRUM. IF THERE ARE NON-REFLECTORIZED SPACES BETWEEN THE REFLECTORIZED ORANGE AND WHITE STRIPES, THEY SHALL NOT BE MORE THAN 2 INCHES WIDE. WHITE DRUMS SHALL BE PAINTED BLACK OR ORANGE BEFORE REFLECTORIZED STRIPES ARE ADDED. ALL DRUMS ON PROJECT WILL BE THE SAME COLOR. WHEN DRUMS ARE PLACED IN THE ROADWAY TO CHANNELIZE TRAFFIC, THEY SHOULD BE USED IN CONJUNCTION WITH CORPORATE WARNING SIGNS. DRUMS SHOULD BE PLACED ON DRUMS USED SINGLY AS A WARNING DEVICE. STEADY BURN ELECTRIC LIGHTS OR DELINEATORS SHOULD BE PLACED ON DRUMS USED IN SERIES FOR TRAFFIC CHANNELIZATION. DRUMS SHALL BE WEIGHTED WITH SAND TO THE EXTENT INDICATED IN THE PLANS.
2. CW1-8 CHEVRON SIGNS, CW1-6A ARROW SIGNS OR VP-1 VERTICAL PANELS MOUNTED ABOVE DRUMS MAY BE USED AS SUPPLEMENTS TO DRUM DELINEATION.

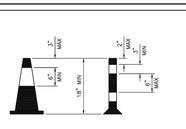

CONES

1. TRAFFIC CONES AND TUBULAR MARKERS SHALL BE A MIN OF 18" INCHES IN HEIGHT WITH 4 BROADENED BASE AND MAY BE MADE OF VARIOUS MATERIALS TO WITHSTAND IMPACT WITHOUT DAMAGE TO THEMSELVES OR TO VEHICLES. LARGER SIZES SHOULD BE USED ON FREEWAYS AND OTHER ROADWAYS WHERE SPEED ARE RELATIVELY HIGH. CONES WHITE EVEN MORE CONSPICUOUS, AND IF NECESSARY, THEY SHALL BE USED IN CONJUNCTION WITH TUBULAR MARKERS. THEY SHOULD BE VERY CLEAN AND BRIGHT FOR MAX TARGET VALUE. FOR NIGHT TIME USE THEY SHALL BE REFLECTORIZED OR EQUIPPED WITH LIGHTING DEVICES FOR MAX VISIBILITY. REFLECTORIZED MATERIAL SHALL HAVE A SMOOTH, SEALED OUTER SURFACE WHICH WILL DISPLAY THE SAME APPROX COLOR DAY AND NIGHT.
2. REFLECTORIZATION OF TUBULAR MARKERS SHALL BE A MIN OF TWO 3" WIDE BANDS PLACED A MAX OF 2" FROM THE TOP AND TWO 3" MIN OF 4" WIDE BANDS REFLECTORIZED WHITE. CONES SHALL BE PROVIDED BY A MIN 6" BAND PLACED A MAX OF 3" FROM THE TOP.
3. CONES OR TUBULAR MARKERS ARE GENERALLY ONLY SUITABLE FOR TEMPORARY USAGE (UP TO 8 HOURS) WITH OTHER CHANNELIZATION DEVICES SUCH AS VERTICAL PANELS OR BARRICADES PREFERRED FOR LONGER TERM USAGE. CARE SHOULD BE TAKEN TO INSURE THAT THEY REMAIN IN THEIR PROPER LOCATION AND IN AN UPRIGHT POSITION.

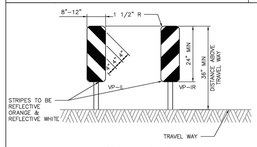

VERTICAL PANELS (VP)

VERTICAL PANELS ARE NORMALLY USED AS CHANNELIZING DEVICES TO INDICATE TANGENT OR NEARLY TANGENT ROADWAY ALIGNMENT WHERE GOOD TARGET VALUE OF A DEVICE IS NEEDED IN DAYTIME AS WELL AS THE NIGHTTIME. IN ADDITION, VERTICAL PANELS SHOULD BE USED AT THE EDGE OF SHOULDER DROP-OFFS AND OTHER SUCH AREAS AS LANE TRANSITIONS WHERE POSITIVE DAY AND NIGHT DELINEATION MAY BE REQUIRED. VERTICAL PANELS SHOULD BE PLACED AT THE EDGE OF THE ROADWAY, OR NOT MORE THAN 2 FEET FROM THE EDGE OF LANE ROADWAYS. STRIPES SHOULD ALWAYS SLOPE DOWNWARD TOWARD THE TRAVELED WAY.

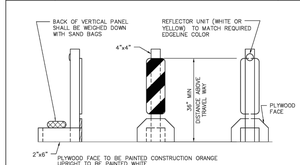

TYPICAL PORTABLE VERTICAL PANEL OR DELINEATOR

OTHER SIMILAR SUPPORTS MAY BE USED WHEN APPROVED BY TMUTCD AND DIRECTED BY THE CITY OF HOUSTON.

APPROVED BY:	APPROVED BY:
Docusigned by: Sukul kanwar	Docusigned by: Hoang Nguyen
CITY ENGINEER	CITY TRAFFIC ENGINEER

APPROVED BY:
Docusigned by: Carl Haddock
DIRECTOR OF HOUSTON PUBLIC WORKS

EFF DATE: NOV-27-2023	DWG NO: 01555-14

CITY OF HOUSTON
HOUSTON PUBLIC WORKS STANDARD

BARRICADE AND CHANNELIZING DEVICES

FOR CITY OF HOUSTON USE ONLY

DRAWING SCALE

NOT TO SCALE

DISCLAIMER:
THE USE OF THIS STANDARD IS GOVERNED BY THE TEXAS ENGINEERING PRACTICE ACT. THE DESIGN REQUIREMENTS ON THIS STANDARD DO NOT PURPORT TO ADDRESS ALL OF THE SAFETY CONCERNS ASSOCIATED WITH THEIR USE. THE ENGINEER OF RECORD (EOR) IS TO REVIEW THESE DESIGN REQUIREMENTS AND BY AUTHORIZING THEIR USE ASSUMES RESPONSIBILITY FOR APPROPRIATELY ADDRESSING THE HAZARDS ASSOCIATED WITH THE PROJECT. THE CITY OF HOUSTON ASSUMES NO RESPONSIBILITY FOR ACTIONS, OMISSIONS, INFORMATION AND/OR DECISIONS PROVIDED BY THE EOR. THE EOR SHALL INDEMNIFY AND HOLD HARMLESS THE CITY OF HOUSTON FOR ANY AND ALL LIABILITY ARISING OUT OF THE USE OF THIS STANDARD BY THE EOR. IN ADDITION, THE EOR IS REQUIRED TO NOTIFY THE CITY OF HOUSTON WHEN IT IS USING THIS STANDARD. THE EOR IS RESPONSIBLE FOR THE PROFESSIONAL QUALITY, TECHNICAL ACCURACY AND THE COORDINATION OF ALL DESIGNS, DRAWINGS, AND OTHER WORK PRODUCT, REGARDLESS OF WHETHER THE CITY OF HOUSTON REVIEWS, APPROVES, ACCEPTS OR AUTHORIZES THE EOR'S WORK PRODUCT. THE CITY OF HOUSTON ASSUMES NO RESPONSIBILITY FOR INCORRECT RESULTS OR DAMAGES RESULTING FROM ITS USE.

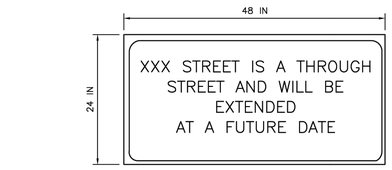

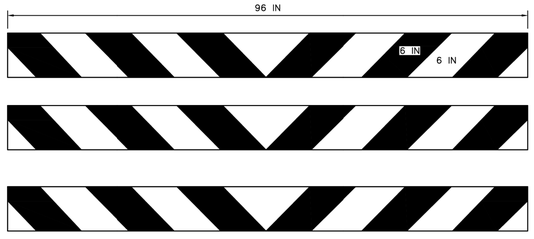

TYPE III BARRICADE
TYPICAL END OF ROAD BARRICADE

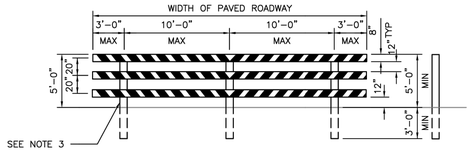

TYPE III BARRICADE
FOR END OF ROAD

NOTES:

1. FONT SHALL BE HWY GOTHIC C, 4 INCH HEIGHT.
2. REFER TO STANDARD DETAIL NO. 01555-14 FOR TYPE III BARRICADE DETAIL.
3. FOR TYPE III BARRICADE FOR END OF ROAD, THE THREE (3) RAILS SHALL BE REFLECTIVE RED AND REFLECTIVE WHITE STRIPES ON SIDE FACING TRAFFIC.

CITY OF HOUSTON
HOUSTON PUBLIC WORKS STANDARD

END OF STREET SIGN

(SCALE: NOT TO SCALE)

APPROVED BY:

Docusigned by: Sukul kanwar — CITY ENGINEER	Docusigned by: Carl Haddock — DIRECTOR OF HPW
Docusigned by: Hoang Nguyen — CITY TRAFFIC ENGINEER	

EFF DATE: NOV-27-2023	DWG NO: 01555-15

RPS — A TETRA TECH COMPANY
Texas PE Firm Reg. #F-929
575 N. Dairy Ashford, Suite 700, Houston, Texas 77079
T +1 281 589 7257
E usinfrastructure@rpsgroup.com

SURVEYED BY: KUO Inc.
FB NO. F-4578

This document is released for the purposes of interim review only under the authority of:

Jeremy Austin, P.E.
Texas P.E. No. 116816
03/30/2026

It is not to be used for bidding, construction, or permitting purposes.

CITY OF HOUSTON
HOUSTON PUBLIC WORKS

RECONSTRUCTION & REHABILITATION
COH LIFT STATIONS

TRAFFIC CONTROL DETAILS
(SHEET 7 OF 10)
STD-C-26

WBS NUMBER	FOR CITY OF HOUSTON USE ONLY
R-000267-0178-3	
DRAWING SCALE	
AS NOTED	
CITY OF HOUSTON PM	
TAHA LOTIA	
SHEET NO. 36 OF 268	

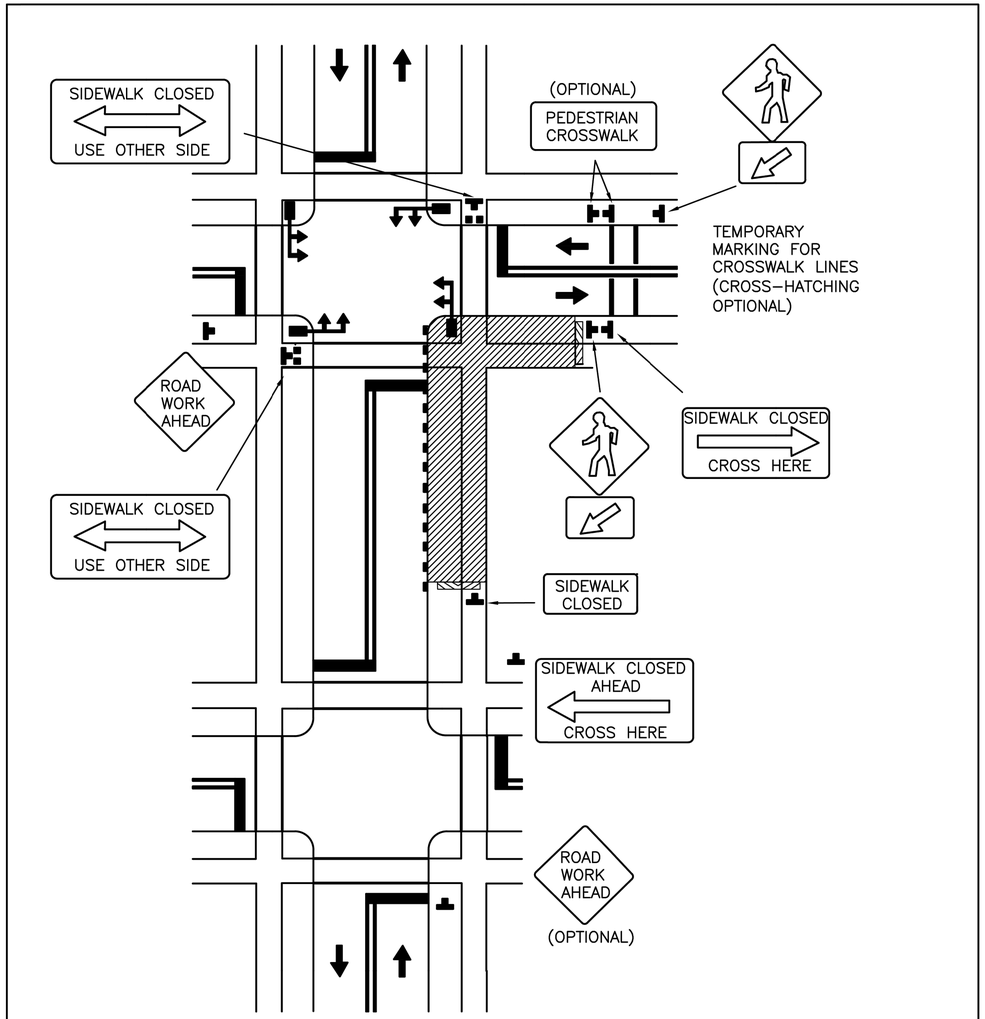

DISCLAIMER: *THE USE OF THIS STANDARD IS GOVERNED BY THE TEXAS ENGINEERING PRACTICE ACT. THE DESIGN REQUIREMENTS ON THIS STANDARD DO NOT PURPORT TO ADDRESS ALL OF THE SAFETY CONCERNS ASSOCIATED WITH THEIR USE. THE ENGINEER OF RECORD (EOR) IS TO REVIEW THESE DESIGN REQUIREMENTS AND BY AUTHORIZING THEIR USE, ACCEPTS RESPONSIBILITY FOR THEIR APPLICABILITY, ADEQUACY AND SAFETY. NO WARRANTY OF ANY KIND IS MADE BY THE CITY OF HOUSTON FOR ANY PURPOSES WHATSOEVER. THE CITY OF HOUSTON ASSUMES NO RESPONSIBILITY FOR INCORRECT RESULTS OR DAMAGES RESULTING FROM ITS USE.*

APPROVED BY:

CITY ENGINEER	CITY TRAFFIC ENGINEER	DIRECTOR OF HPW
DocuSigned by: Suhail Kanwar 9EF8B0C641F5478...	DocuSigned by: KHANG NGUYEN 95A29EFDA75B4CD...	DocuSigned by: Carol Haddock A93C410B72B3453...

CITY OF HOUSTON
HOUSTON PUBLIC WORKS STANDARD

CROSSWALK CLOSURES AND PEDESTRIAN DETOURS

(SCALE: NOT TO SCALE)

EFF DATE: NOV–27–2023 | DWG NO: 01555–16

RPS A TETRA TECH COMPANY
Texas PE Firm Reg. #F-929
575 N. Dairy Ashford, Suite 700,
Houston, Texas 77079
T +1 281 589 7257
E usinfrastructure@rpsgroup.com

This document is released for the purposes of interim review only under the authority of:

Jeremy Austin, P.E.
Texas P.E. No. 116816
03/30/2026

It is not to be used for bidding, construction, or permitting purposes.

SURVEYED BY: KUO Inc.
FB NO. F–4578

CITY OF HOUSTON
HOUSTON PUBLIC WORKS

RECONSTRUCTION & REHABILITATION
COH LIFT STATIONS

TRAFFIC CONTROL DETAILS
(SHEET 8 OF 10)
STD–C–27

WBS NUMBER	FOR CITY OF HOUSTON USE ONLY
R–000267–0178–3	
DRAWING SCALE	
AS NOTED	
CITY OF HOUSTON PM	
TAHA LOTIA	
SHEET NO. 37 OF 268	

PLOTTED: 3/30/2026 4:33 PM
PLOT STYLE: Coh_ctb_230809.ctb
FILE NAME: TRAFFIC CONTROL DETAILS (SHEET 10 OF 10).dwg

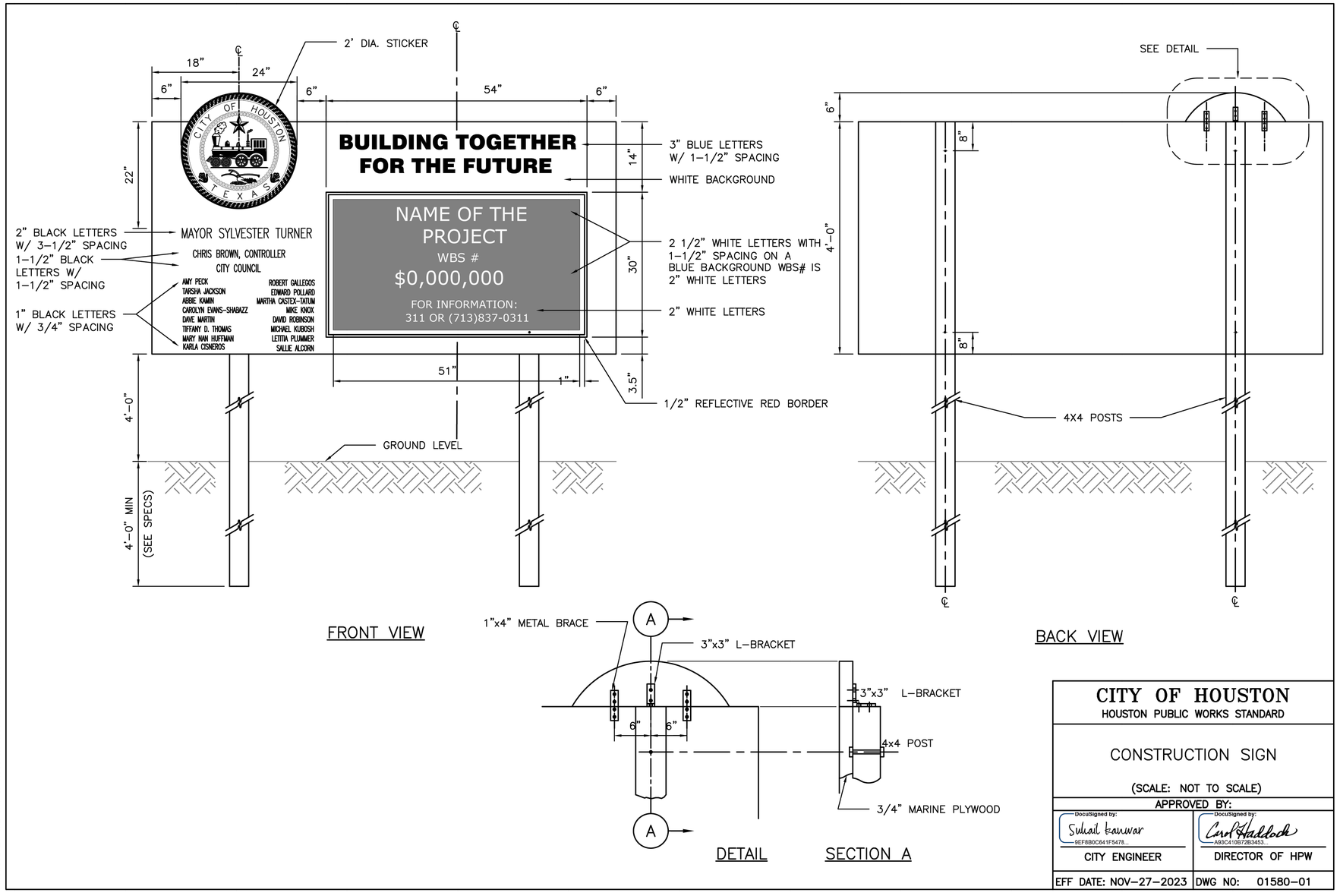

DISCLAIMER:
THE USE OF THIS STANDARD IS GOVERNED BY THE TEXAS ENGINEERING PRACTICE ACT. THE DESIGN REQUIREMENTS ON THIS STANDARD DO NOT PURPORT TO ADDRESS ALL OF THE SAFETY CONCERNS ASSOCIATED WITH THEIR USE. THE ENGINEER OF RECORD (EOR) IS TO REVIEW THESE DESIGN REQUIREMENTS AND BY AUTHORIZING THEIR USE, ACCEPTS RESPONSIBILITY FOR THEIR APPLICABILITY, ADEQUACY AND SAFETY. NO WARRANTY OF ANY KIND IS MADE BY THE CITY OF HOUSTON FOR ANY PURPOSES WHATSOEVER. THE CITY OF HOUSTON ASSUMES NO RESPONSIBILITY FOR INCORRECT RESULTS OR DAMAGES RESULTING FROM ITS USE.

CITY OF HOUSTON
HOUSTON PUBLIC WORKS STANDARD

CONSTRUCTION SIGN

(SCALE: NOT TO SCALE)

APPROVED BY:

CITY ENGINEER	DIRECTOR OF HPW
DocuSigned by: Suhail Kanwar 9EF8B0C841F5478...	DocuSigned by: Carol Haddock A93C410B72B3453...
EFF DATE: NOV–27–2023	DWG NO: 01580–01

RPS A TETRA TECH COMPANY
Texas PE Firm Reg. #F-929
575 N. Dairy Ashford, Suite 700,
Houston, Texas 77079
T +1 281 589 7257
E usinfrastructure@rpsgroup.com

SURVEYED BY: KUO Inc.
FB NO. F–4578

This document is released for the purposes of interim review only under the authority of:

Jeremy Austin, P.E.
Texas P.E. No. 116816
03/30/2026

It is not to be used for bidding, construction, or permitting purposes.

CITY OF HOUSTON
HOUSTON PUBLIC WORKS

RECONSTRUCTION & REHABILITATION
COH LIFT STATIONS

TRAFFIC CONTROL DETAILS
(SHEET 9 OF 10)
STD–C–28

WBS NUMBER	FOR CITY OF HOUSTON USE ONLY
R–000267–0178–3	
DRAWING SCALE	
AS NOTED	
CITY OF HOUSTON PM	
TAHA LOTIA	
SHEET NO. 38 OF 268	

PLOTTED: 3/30/2026 4:33 PM
PLOT STYLE: Coh_ctb_230809.ctb
FILE NAME: TRAFFIC CONTROL DETAILS (SHEET 10 OF 10).dwg

DISCLAIMER:
THE USE OF THIS STANDARD IS GOVERNED BY THE TEXAS ENGINEERING PRACTICE ACT. THE DESIGN REQUIREMENTS ON THIS STANDARD DO NOT PURPORT TO ADDRESS ALL OF THE SAFETY CONCERNS ASSOCIATED WITH THE USE OF THESE DESIGNS. IT IS THE RESPONSIBILITY OF THE ENGINEER ADAPTING THESE DESIGNS FOR USE IN A SPECIFIC APPLICATION TO DETERMINE AND ADDRESS ANY SUCH SAFETY CONCERNS. THE CITY OF HOUSTON ASSUMES NO RESPONSIBILITY FOR INCORRECT RESULTS OR DAMAGES RESULTING FROM ITS USE. IN NO EVENT SHALL THE CITY OF HOUSTON BE LIABLE FOR ANY DAMAGES WHATSOEVER, WHETHER IN CONTRACT, TORT OR OTHERWISE, ARISING OUT OF OR IN CONNECTION WITH THE USE OF THIS STANDARD OR ANY PART THEREOF. ANY WARRANTY OF ANY KIND IS MADE BY THE CITY OF HOUSTON FOR ANY PURPOSES WHATSOEVER.

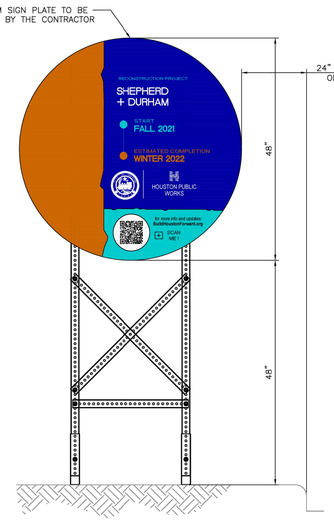

FRONT VIEW

PROJECT SIGN – 48"

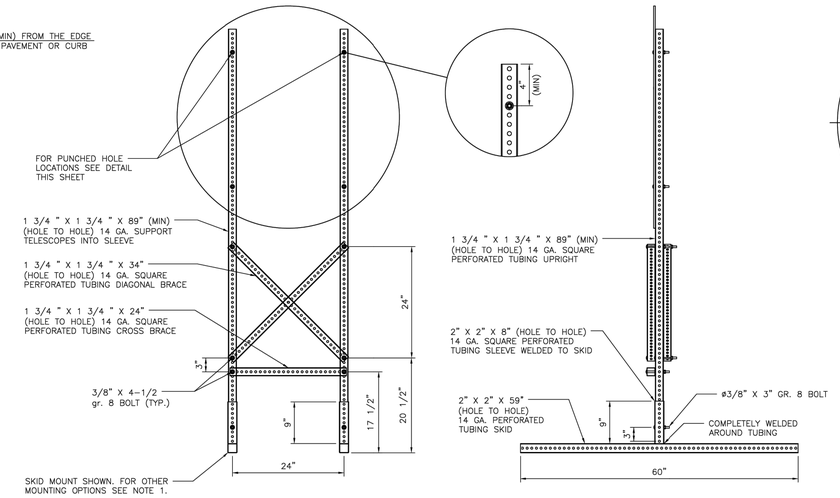

FRONT VIEW

SIDE VIEW

SKID MOUNTED SUPPORTS FOR 48" PROJECT SIGN

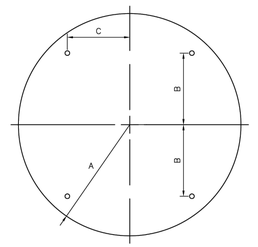

CIRCLE

A	B	C	T
24"	15"	12"	0.080"

48" SIGN PLATE HOLE DETAIL

NOTES:

1. ALLOWABLE POST INSTALLATION METHODS ARE: CONCRETE FOOTING, SURFACE MOUNTING, SKID MOUNTING AND PILE DRIVEN POSTS.
2. FOR POST INSTALLATION WITH CONCRETE FOOTING, REFER TO DETAIL 01554-01.
3. FOR SURFACE MOUNTED POST INSTALLATION, REFER TO DETAIL 01554-02.
4. FOR SKID MOUNTING REQUIREMENTS REFER TO SPECIFICATION 01582.
5. PILE DRIVEN POSTS MUST BE DRIVEN TO A MINIMUM DEPTH OF 4-FEET INTO EXISTING GROUND.
6. LAYOUT, TEXT SIZE, AND OVERALL DESIGN OF THE SIGN WILL BE THE RESPONSIBILITY OF THE BUILD HOUSTON COORDINATOR.
7. ALL SIGN POSTS, SIGN TUBING, AND SIGN FASTENERS SHALL BE GALVANIZED STEEL PER SPECIFICATION 01582.

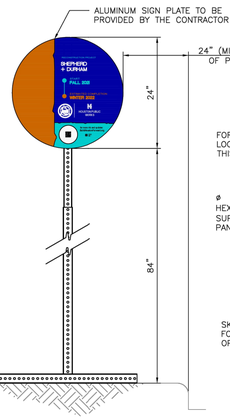

FRONT VIEW

PROJECT SIGN – 24"

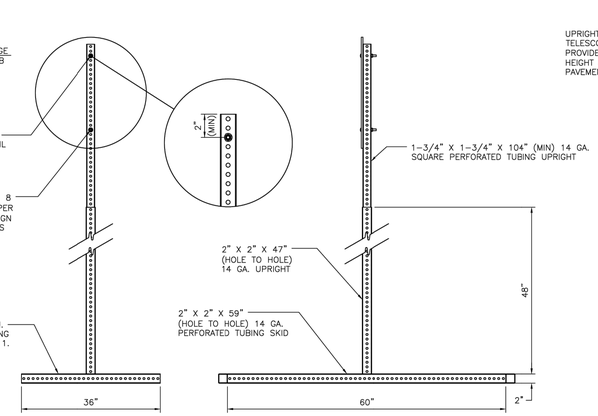

FRONT VIEW

SIDE VIEW

SKID MOUNTED SUPPORTS FOR 24" PROJECT SIGN

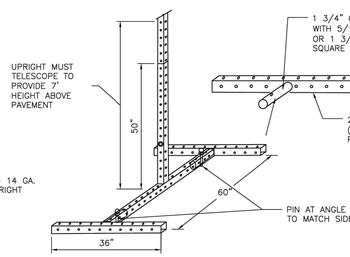

ISO VIEW

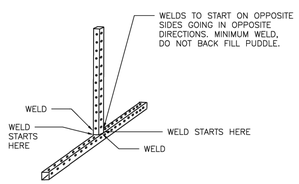

ISO VIEW

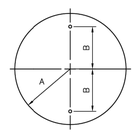

A	B	C
12"	8"	0.080"

24" SIGN PLATE HOLE DETAIL

APPROVED BY:	APPROVED BY:
DocuSigned by: Sulaal Iraiwar	DocuSigned by: Carl Wallbrecht
CITY ENGINEER	DIRECTOR OF HOUSTON PUBLIC WORKS
EFF DATE: NOV-27-2023	DWG NO: 01582-01

CITY OF HOUSTON
HOUSTON PUBLIC WORKS STANDARD

CONSTRUCTION SIGN BUILD HOUSTON FORWARD

DRAWING SCALE
NOT TO SCALE

FOR CITY OF HOUSTON USE ONLY

RPS
A TETRA TECH COMPANY
Texas PE Firm Reg. #F-929
575 N. Dairy Ashford, Suite 700,
Houston, Texas 77079
T +1 281 589 7257
E usinfrastructure@rpsgroup.com

SURVEYED BY: KUO Inc.
FB NO. F-4578

This document is released for the purposes of interim review only under the authority of:

Jeremy Austin, P.E.
Texas P.E. No. 116816
03/30/2026

It is not to be used for bidding, construction, or permitting purposes.

CITY OF HOUSTON
HOUSTON PUBLIC WORKS

RECONSTRUCTION & REHABILITATION
COH LIFT STATIONS

TRAFFIC CONTROL DETAILS
(SHEET 10 OF 10)
STD-C-29

WBS NUMBER	FOR CITY OF HOUSTON USE ONLY
R-000267-0178-3	
DRAWING SCALE	
AS NOTED	
CITY OF HOUSTON PM	
TAHA LOTIA	
SHEET NO. 39 OF 268	

PLOTTED: 3/30/2026 4:33 PM
PLOT STYLE: Coh_ctb_230809.ctb
FILE NAME: TRAFFIC CONTROL DETAILS (SHEET 10 OF 10).dwg

PLOTTED: 3/30/2026 4:33 PM
PLOT STYLE: Coh_ctb_230809.ctb
FILE NAME: FENCE DETAILS.dwg

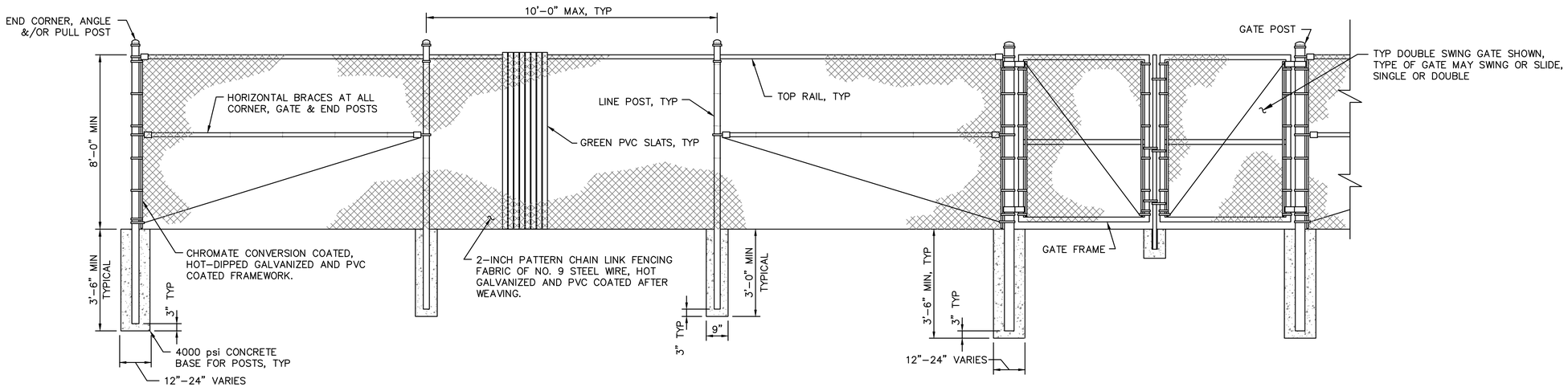

GENERAL SITE FENCING
(SEE NOTES 1 & 2)

NOTES:

1. ALL FENCING SHALL BE MANUFACTURED AND INSTALLED PER SPECIFICATIONS.
2. PROVIDE DARK GREEN PVC COATED FENCE FABRIC, POSTS AND HARDWARE. PROVIDE DARK GREEN PVC FENCE SLATS.

RPS A TETRA TECH COMPANY
Texas PE Firm Reg. #F-929
575 N. Dairy Ashford, Suite 700,
Houston, Texas 77079
T +1 281 589 7257
E usinfrastructure@rpsgroup.com

SURVEYED BY: KUO Inc.
FB NO. F-4578

This document is released for the purposes of interim review only under the authority of:

Jeremy Austin, P.E.
Texas P.E. No. 116816
03/30/2026

It is not to be used for bidding, construction, or permitting purposes.

CITY OF HOUSTON
HOUSTON PUBLIC WORKS

RECONSTRUCTION & REHABILITATION
COH LIFT STATIONS

FENCE DETAILS
STD-C-30

WBS NUMBER	FOR CITY OF HOUSTON USE ONLY
R-000267-0178-3	
DRAWING SCALE	
AS NOTED	
CITY OF HOUSTON PM	
TAHA LOTIA	
SHEET NO. 40 OF 268	

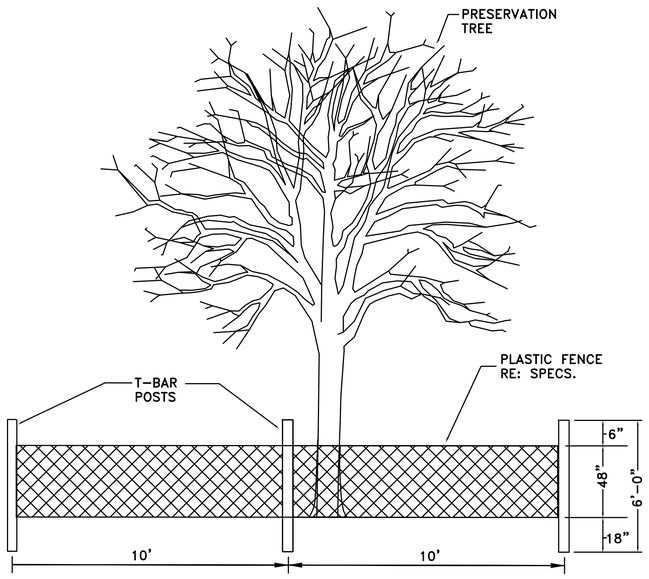

TREE PROTECTION FENCING DETAIL A

NOT TO SCALE

TREE PROTECTION FENCING DETAIL B

NOT TO SCALE

ROOT PRUNE FOR STREET-CURB & GUTTER - NO 0CC

NOT TO SCALE

Tree Removal List

Tree No.	Location	Description	Replacement requirement
190	2807 Brookdale	4" Crepe Myrtle	0
191	2807 Brookdale	4" Crepe Myrtle	0
192	2807 Brookdale	12" Water Oak	12
193	2807 Brookdale	14" Water Oak	14
194	2807 Brookdale	16" Water Oak	16
195	2807 Brookdale	13" Water Oak	13
196	2807 Brookdale	5" Water Oak	5
197	2807 Brookdale	9" Water Oak	9
200	4911 Shady Maple Dr	21" Cherrybark Oak	21
220	22405 Loop 494	15" Tallow	0
221	22405 Loop 494	12" Tallow	0
224	22405 Loop 494	16" Black Willow	0
225	22405 Loop 494	11" Tallow	0
		TOTAL REPLACEMENT INCHES REQUIRED	**90**

Tree Replacement List

Quantity	Caliper Size	Species	Container/Tree Spade size
		TOTAL REPLACEMENT INCHES INCLUDED IN PLAN	**0**

NOTE: Tree replacement locations are not shown on plans. Contractor must coordinate with City of Houston Urban Forestry and Houston Public Works prior to PURCHASING trees. This project may not have adequate room for all required replacement trees without creating regulatory sign or traffic/pedestrian visibility issues. Number of trees and planting locations will be determined by City of Houston Urban Forestry in construction phase. Trees that are planted are to be maintained and watered for 2 years following planting per standard spec 02915. Timing of planting may be delayed in periods of drought with mandatory water restrictions in place-timing to be coordinated with City of Houston Urban Forestry. Trees in esplanade groupings to be planted in common bed with 4" of hardwood mulch between trees.

Trees are to be maintained and watered for 2 years following planting per standard spec 02915. Timing of planting may be delayed in periods of drought with mandatory water restrictions in place-timing to be coordinated with City of Houston Forestry.

Tree replacement locations shall comply with Houston Public Works spec sections 02811, 02911, 02912, 02915, 02921 & 02922. In general trees along sides of street right of ways shall be no closer than 3' to back of curb or 20' from another tree. Trees in medians shall be no closer than 6' back of curb, 75' from an intersection, 50' to a median cut, or 20' from another tree. Contractor to coordinate locations with City Forestry and HPW prior to PURCHASING trees. All replacement trees called out on plans may not be planted on project relative to coordination with listed parties.

Cash Allowance Due Parks from HPW for Balance of Mitigation Not Planted on Project

	Required Mitigation total	Mitigation rate/inch	
0-5.99"	5	$ 302.12	$ 1,510.60
6-11.99"	9	$ 503.55	$ 4,531.95
12" +	76	$ 671.40	$ 51,026.40
		TOTAL REQUIRED MITIGATION FEE	**$ 57,068.95**

C.N. Koehl
Urban Forestry, Inc.
210 Stone Bush Ct. ◦ Katy, Texas 77493
281-391-0022 ckoehl@koehlurbanforestry.com

APPROVED:

RPS A TETRA TECH COMPANY
Texas PE Firm Reg. #F-929
575 N. Dairy Ashford, Suite 700, Houston, Texas 77079
T +1 281 589 7257
E usinfrastructure@rpsgroup.com

SURVEYED BY: KUO Inc.
FB NO. F-4578

CITY OF HOUSTON
HOUSTON PUBLIC WORKS

RECONSTRUCTION & REHABILITATION
COH LIFT STATIONS

TREE PROTECTION DETAILS
STD-C-31

SHEET 6 OF 6

WBS NUMBER	FOR CITY OF HOUSTON USE ONLY
R-000267-0178-3	
DRAWING SCALE	
AS NOTED	
CITY OF HOUSTON PM	
TAHA LOTIA	
SHEET NO. 41 OF 268	

PLOTTED: 3/25/2026 11:29 AM
PLOT STYLE: CNKoehl.ctb
FILE PATH: C:\Users\Ned\Desktop\UPCOMING PROJECTS\TETRATECH COH LS REHAB\06 TPP - DETAILS.dwg

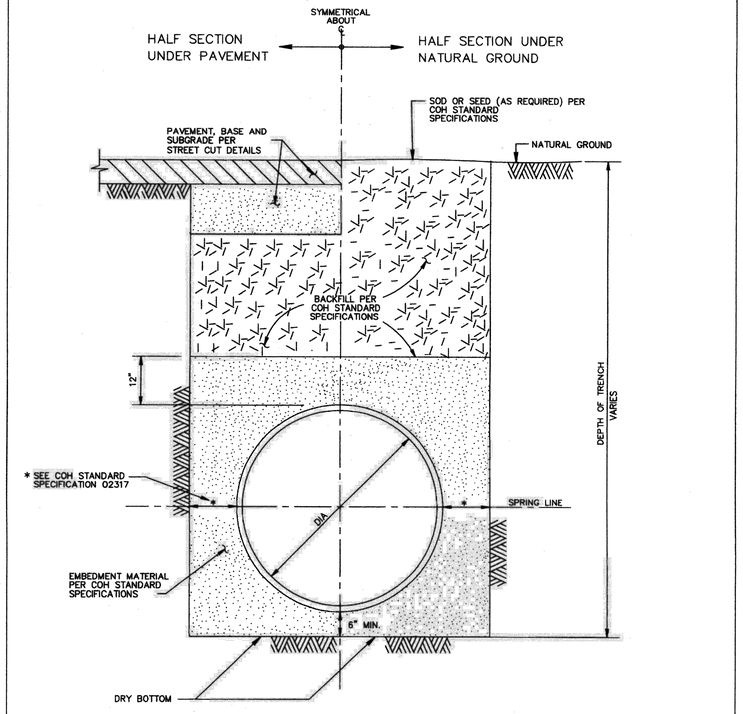

CITY OF HOUSTON
DEPARTMENT OF PUBLIC WORKS AND ENGINEERING

WATER DISTRIBUTION MAIN
BEDDING AND BACKFILL FOR
OPEN CUT TRENCHES
(NOT TO SCALE)

APPROVED BY: CITY ENGINEER	APPROVED BY: DIRECTOR OF PUBLIC WORKS AND ENGINEERING
EFF DATE: JUL-01-2010	DWG NO: 02317-04

RPS
A TETRA TECH COMPANY
Texas PE Firm Reg. #F-929
575 N. Dairy Ashford, Suite 700,
Houston, Texas 77079
T +1 281 589 7257
E usinfrastructure@rpsgroup.com

SURVEYED BY: KUO Inc.
FB NO. F-4578

This document is released for the purposes of interim review only under the authority of:

Jeremy Austin, P.E.
Texas P.E. No. 116816
03/30/2026

It is not to be used for bidding, construction, or permitting purposes.

CITY OF HOUSTON
HOUSTON PUBLIC WORKS

RECONSTRUCTION & REHABILITATION
COH LIFT STATIONS

FORCE MAIN DETAILS
(SHEET 1 OF 3)
STD-C-32

WBS NUMBER	FOR CITY OF HOUSTON USE ONLY
R-000267-0178-3	
DRAWING SCALE	
AS NOTED	
CITY OF HOUSTON PM	
TAHA LOTIA	
SHEET NO. 42 OF 268	

PLOTTED: 3/30/2026 4:39 PM
PLOT STYLE: Coh_ctb_230809.ctb
FILE NAME: FORCE MAIN DETAILS (SHEET 1 OF 3).dwg

PLOTTED: 3/30/2026 4:39 PM
PLOT STYLE: Coh_ctb_230809.ctb
FILE NAME: FORCE MAIN DETAILS (SHEET 2 OF 3).dwg

NOTE:

1. MATERIALS AND COATINGS TO BE IN ACCORDANCE WITH WATER LINE STANDARD SPECIFICATIONS.
2. RESTRAIN EXISTING PIPING BEYOND STEEL SECTION AS REQUIRED TO PREVENT MOVEMENT.
3. AS PER DESIGN GUIDELINE.

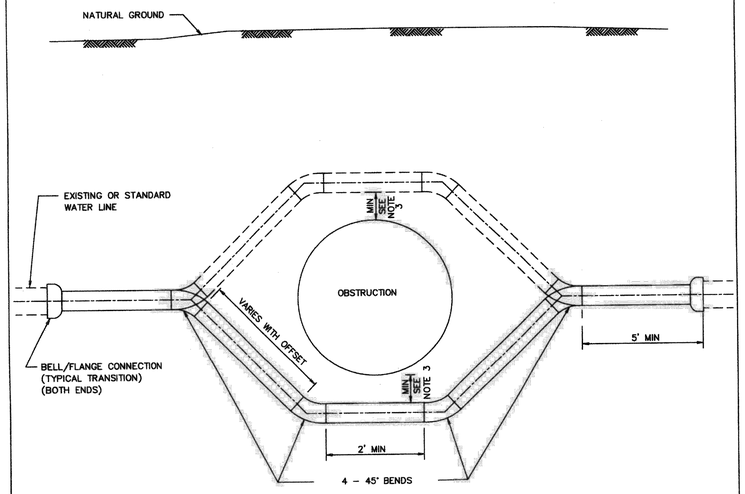

PIPE OFFSET ALTERNATES

1. DUCTILE IRON PIPE PRESSURE 250 PSI WITH APPROVED RESTRAINED JOINTS.
2. PVC PIPE WITH INTEGRAL RESTRAINED JOINT SYSTEM, OR DUCTILE – IRON RESTRINED JOINT FITTINGS, EPOXY LINED AND COATED. USE 250 PSI AWWA C900 DR 14 FOR PVC RESTRAINED JOINTS.
3. PVC NOT ALLOWED FOR GREATER THAN 20 FT OF COVER OR FOR DIAMETER LARGER THAN 20 IN.
4. USE ONLY DUCTILE IRON AND PVC PRODUCTS LISTED ON OCE DIVISION APPROVED PRODUCTS LIST AND IN ACCORDANCE WITH CITY STANDARD SPECIFICATIONS.

CITY OF HOUSTON DEPARTMENT OF PUBLIC WORKS AND ENGINEERING	
TYPICAL STEEL PIPE OFFSET SECTION FOR WATER LINES (NOT TO SCALE)	
APPROVED BY: CITY ENGINEER	APPROVED BY: DIRECTOR OF PUBLIC WORKS AND ENGINEERING
EFF DATE: JULY-01-2010	DWG NO: 02511-01

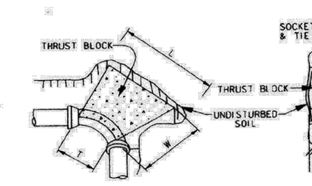

90° BEND
(45° BENDS SIMILAR)

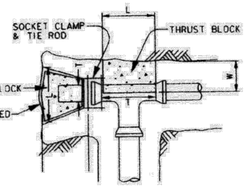

TEE & PLUG

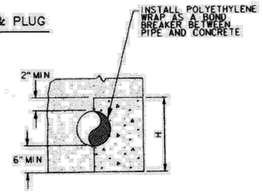

PIPE
CROSS SECTION

MINIMUM BLOCKING DIMENSION IN INCHES												
PIPE SIZE	90° BEND				45° BEND				TEE/PLUG			
	W	H	L	T	W	H	L	T	W	H	L	T
4"	6	12	14	10	6	8	11	8	6	10	12	12
6"	8	14	26	12	8	14	14	12	8	14	19	19
8"	10	16	40	16	10	18	20	16	10	18	26	26
10"	12	24	42	18	12	22	25	18	12	24	30	30
12"	14	36	40	30	14	26	30	22	14	26	40	40

CORRECTION FACTORS		
SOIL TYPE	SOIL BEARING STRENGTH S_b (lb/ft²)	MULTIPLY "L" AND "H" BY
SOFT CLAY	1000	1.73
SILT	1500	1.41
SANDY SILT	3000	1.00
SAND	4000	0.87
SANDY CLAY	6000	0.71
HARD CLAY	9000	0.58

NOTES:

1. DEPTH "W" MAY BE GREATER THAN SPECIFIED TO ALLOW WORKING SPACE.
2. BLOCKING MUST BE PLACED AGAINST UNDISTURBED EARTH. WHERE THIS IS NOT POSSIBLE, THE FILL BETWEEN THE BEARING SURFACE AND UNDISTURBED SOIL MUST BE COMPACTED TO AT LEAST 90% STANDARD PROCTOR DENSITY.
3. PROVIDE CONCRETE IN ACCORDANCE WITH STANDARD SPECIFICATION SECTION 03315 – CONCRETE FOR UTILITY CONSTRUCTION.
4. BLOCKING DIMENSIONS SHOWN ARE BASED ON 3000 PSI SOIL BEARING STRENGTH AND 125 PSI INTERNAL WATER PRESSURE. FOR OTHER SOIL CONDITIONS, MULTIPLY DIMENSIONS "L" AND "H" BY THE APPROPRIATE CORRECTION FACTOR.

CITY OF HOUSTON DEPARTMENT OF PUBLIC WORKS AND ENGINEERING	
THRUST BLOCK DETAIL FOR WATER LINES (4-INCH TO 12 INCH) (NOT TO SCALE)	
APPROVED BY: CITY ENGINEER	APPROVED BY: DIRECTOR OF PUBLIC WORKS AND ENGINEERING
EFF DATE: JULY-01-2010	DWG NO: 02511-02

RPS
A TETRA TECH COMPANY
Texas PE Firm Reg. #F-929
575 N. Dairy Ashford, Suite 700,
Houston, Texas 77079
T +1 281 589 7257
E usinfrastructure@rpsgroup.com

SURVEYED BY: KUO Inc.
FB NO. F-4578

This document is released for the purposes of interim review only under the authority of:

Jeremy Austin, P.E.
Texas P.E. No. 116816
03/30/2026

It is not to be used for bidding, construction, or permitting purposes.

CITY OF HOUSTON
HOUSTON PUBLIC WORKS

RECONSTRUCTION & REHABILITATION
COH LIFT STATIONS

FORCE MAIN DETAILS
(SHEET 2 OF 3)
STD-C-33

WBS NUMBER	FOR CITY OF HOUSTON USE ONLY
R-000267-0178-3	
DRAWING SCALE	
AS NOTED	
CITY OF HOUSTON PM	
TAHA LOTIA	
SHEET NO. 43 OF 268	

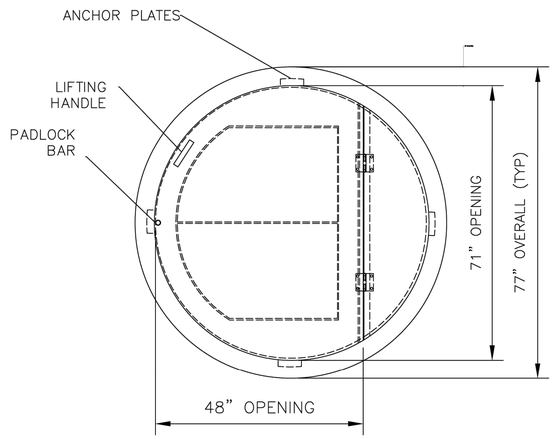

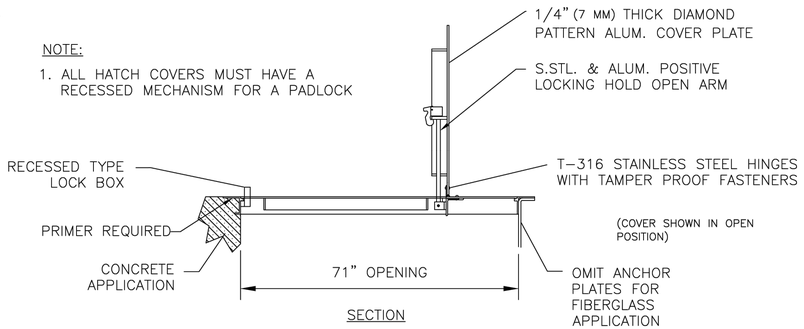

STANDARD FEATURES:

- AUTO-LOCK T-316 STAINLESS STEEL HOLD OPEN ARM WITH RELEASE HANDLE
- T-316 STAINLESS STEEL HINGES AND ATTACHING HARDWARE
- NON-CORROSIVE LOCKING BAR
- SINGLE LEAF CONSTRUCTION FOR MAXIMUM ACCESS
- 300 LBS. PER SQ. FT. LOAD RATING (1464 KG. PER SQ. METER LOAD RATING)
- EXTRUDED ALUMINUM FRAME
- RECESSED LIFTING HANDLE
- ANCHOR PLATES (ORDER WITHOUT FOR FIBERGLASS OR DROP-IN INSTALLATIONS)
- LIFETIME GUARANTEE
- COVERED FRAME PAINTED FOREST GREEN
- PROVIDE ACCESS HATCH DOOR WITH RECESSED (PATERNAL) TYPE PADLOCK CLIPS. EXPOSED PADLOCK CLIP NOT ALLOWED.

STANDARD SIZES					
QTY.	MODEL NO.	A DIM. INCHES (MM)	B DIM. INCHES (MM)	C DIM. INCHES (MM)	UNIT WT. LBS. (KG.)
1	R1R72	48 (1219)	71 (1803)	77 (1956)	175 (79)

FORCE MAIN BYPASS MANHOLE HATCH

SOURCE: HALLIDAY PRODUCTS
PHONE: 1 (800) 298-1027

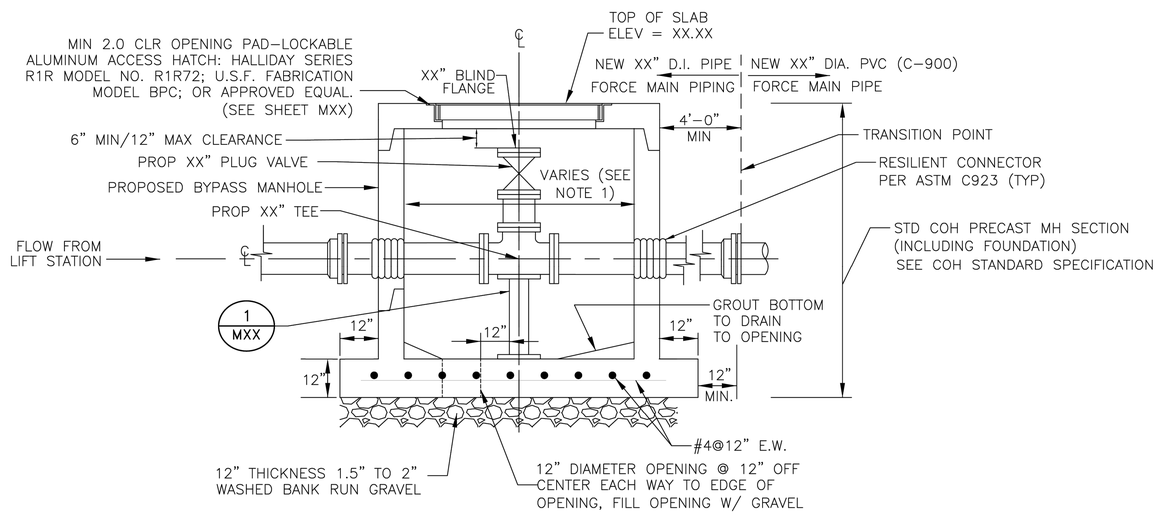

BYPASS MANHOLE

A TETRA TECH COMPANY
Texas PE Firm Reg. #F-929
575 N. Dairy Ashford, Suite 700,
Houston, Texas 77079
T +1 281 589 7257
E usinfrastructure@rpsgroup.com

SURVEYED BY: KUO Inc.
FB NO. F-4578

This document is released for the purposes of interim review only under the authority of:

Jeremy Austin, P.E.
Texas P.E. No. 116816
03/30/2026

It is not to be used for bidding, construction, or permitting purposes.

CITY OF HOUSTON

HOUSTON PUBLIC WORKS

RECONSTRUCTION & REHABILITATION
COH LIFT STATIONS

FORCE MAIN DETAILS
(SHEET 3 OF 3)
STD-C-34

WBS NUMBER	FOR CITY OF HOUSTON USE ONLY
R-000267-0178-3	
DRAWING SCALE	
AS NOTED	
CITY OF HOUSTON PM	
TAHA LOTIA	
SHEET NO. 44 OF 268	

PLOTTED: 3/30/2026 4:39 PM
PLOT STYLE: Coh_ctb_230809.ctb
FILE NAME: FORCE MAIN DETAILS (SHEET 3 OF 3).dwg

1 TYPICAL WET WELL GOOSENECK VENT DETAIL

SCALE: N.T.S.

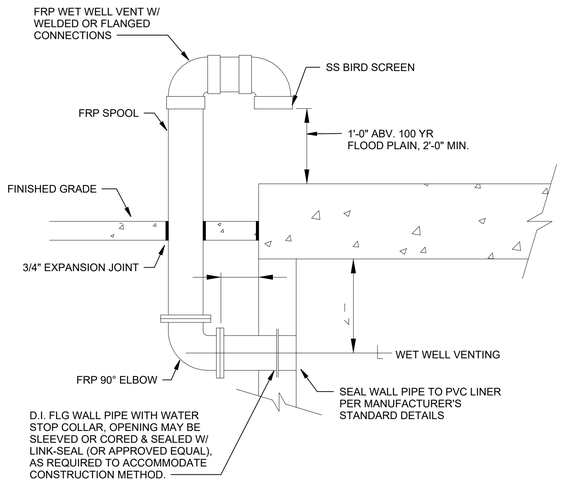

2 WET WELL LOW PROFILE VENT DETAIL

SCALE: N.T.S.

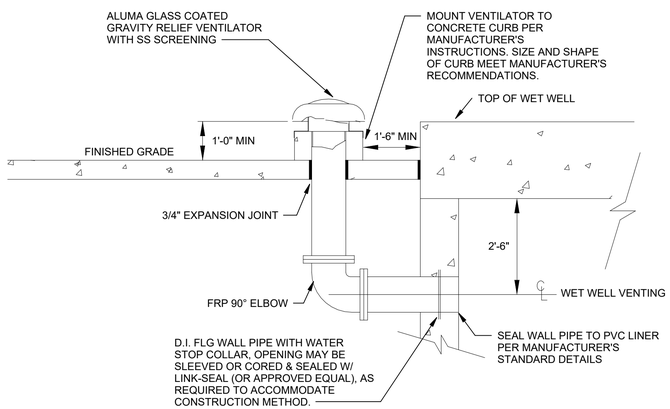

NOTE: PROVIDED UPON REQUEST, DETAIL 1 IS STANDARD.

NO	DATE	REVISION	APP.

A TETRA TECH COMPANY
Texas PE Firm Reg. #F-929
575 N. Dairy Ashford, Suite 700,
Houston, Texas 77079
T +1 281 589 7257
E usinfrastructure@rpsgroup.com

SURVEYED BY: KUO INC.
FB NO. F-4578

This document is released for the purposes of interim review only under the authority of:

Luke Ramirez, P.E.
Texas P.E. No. 128371
2/16/26

It is not to be used for bidding, construction, or permitting purposes.

CITY OF HOUSTON

HOUSTON PUBLIC WORKS

RECONSTRUCTION & REHABILITATION
COH LIFT STATIONS

STANDARD MECHANICAL DETAILS

STD-M-1

WBS NUMBER	FOR CITY OF HOUSTON USE ONLY
R-000267-0178-3	
DRAWING SCALE	
AS NOTED	
CITY OF HOUSTON PM	
TAHA LOTIA	
SHEET NO. 45 OF 268	

PLOTTED: 3/27/2026 9:39:39 AM
PLOT STYLE:
Autodesk Docs://200-317106-24001 COH LS Rehab Design/M-LIFT STATIONS-200-317106-24001_v25.rvt

1 REDUCED PRESSURE BACKFLOW PREVENTER DETAIL

SCALE: N.T.S.

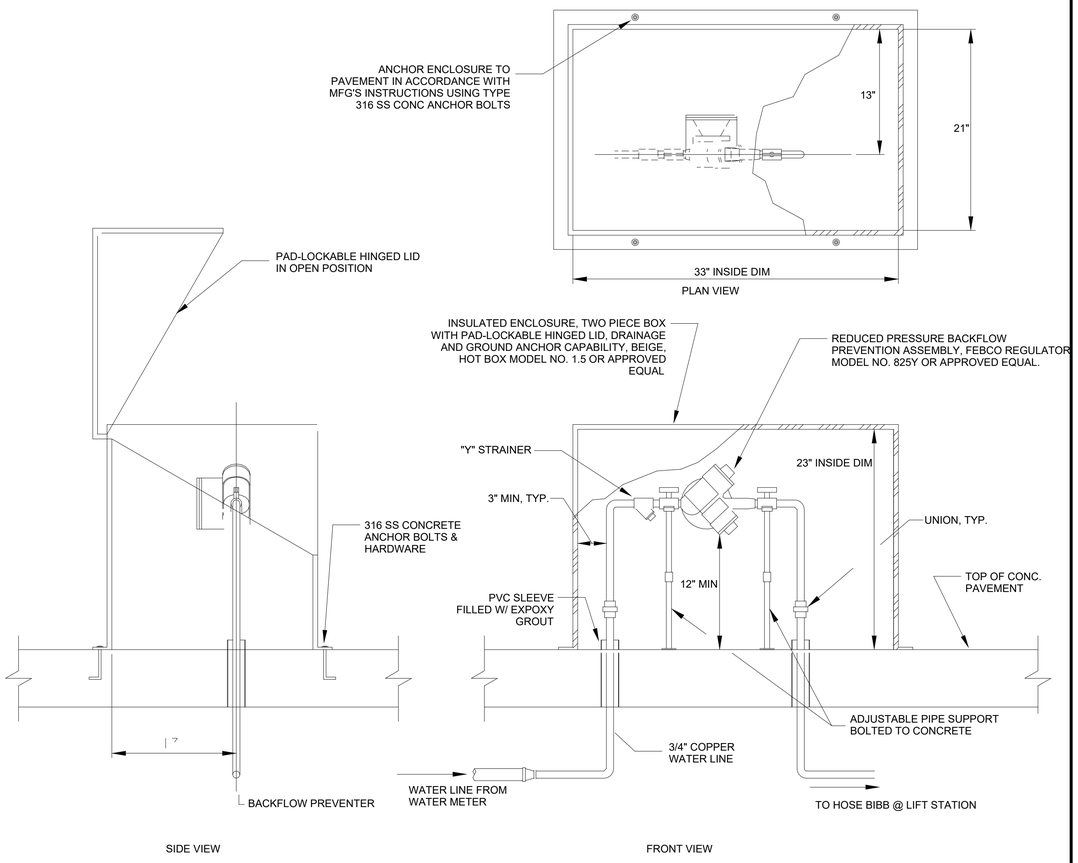

2 TYPICAL NON-FREEZE YARD HYDRANT DETAIL

SCALE: N.T.S.

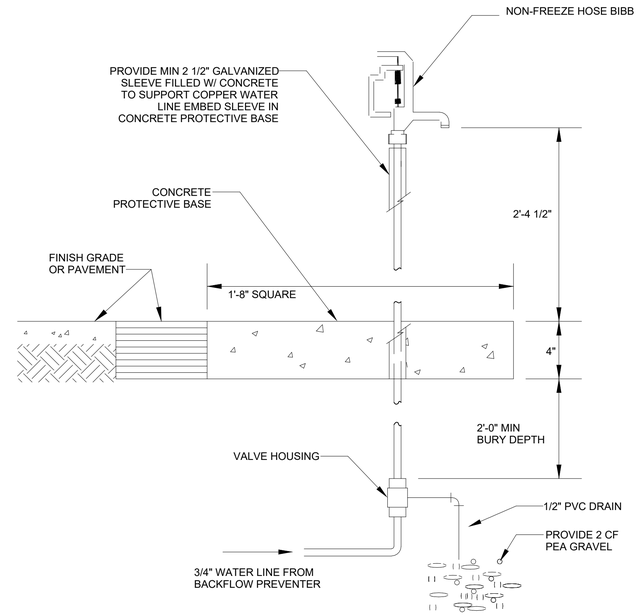

NO.	DATE	REVISION	APP.

A TETRA TECH COMPANY
Texas PE Firm Reg. #F-929
575 N. Dairy Ashford, Suite 700,
Houston, Texas 77079
T +1 281 589 7257
E usinfrastructure@rpsgroup.com

SURVEYED BY: KUO INC.
FB NO. F-4578

This document is released for the purposes of interim review only under the authority of:

Luke Ramirez, P.E.
Texas P.E. No. 128371
2/16/26

It is not to be used for bidding, construction, or permitting purposes.

CITY OF HOUSTON

HOUSTON PUBLIC WORKS

RECONSTRUCTION & REHABILITATION
COH LIFT STATIONS

STANDARD PLUMBING DETAILS

STD-P-1

WBS NUMBER	FOR CITY OF HOUSTON USE ONLY
R-000267-0178-3	
DRAWING SCALE	
AS NOTED	
CITY OF HOUSTON PM	
TAHA LOTIA	
SHEET NO. 46 OF 268	

PLOTTED: 3/27/2026 9:39:54 AM
PLOT STYLE:
Autodesk Docs://200-317106-24001 COH LS Rehab Design/M-LIFT STATIONS-200-317106-24001_v25.rvt

1 TYPICAL WATER SERVICE LINE AND METER DETAIL

SCALE: N.T.S.

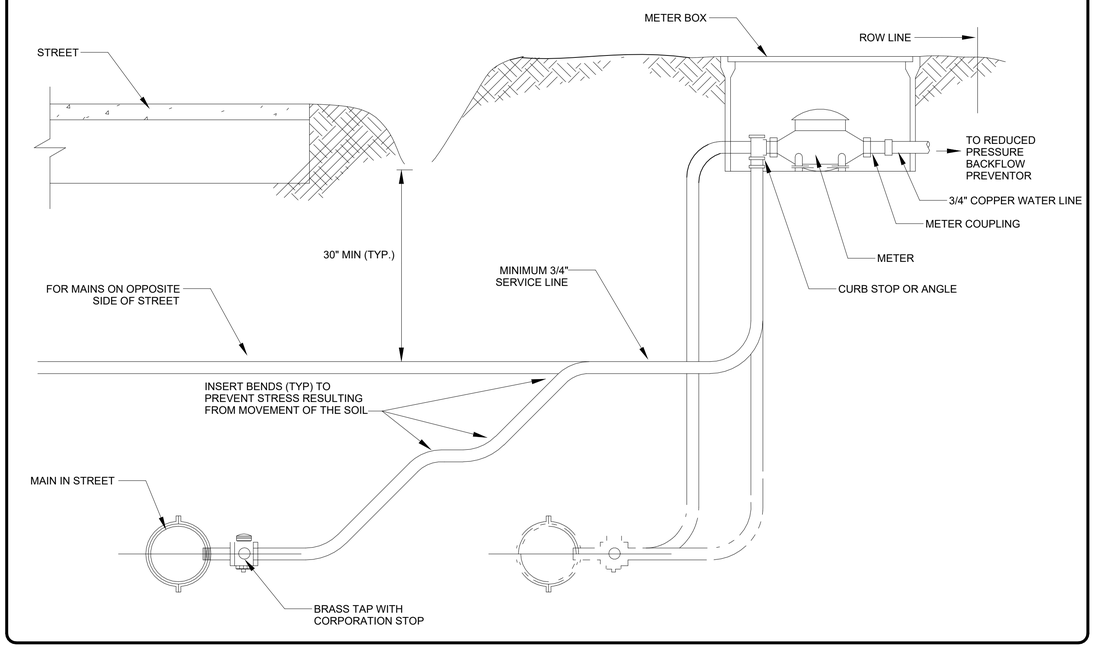

2 GAS SERVICE ENTRANCE DETAIL

SCALE: N.T.S.

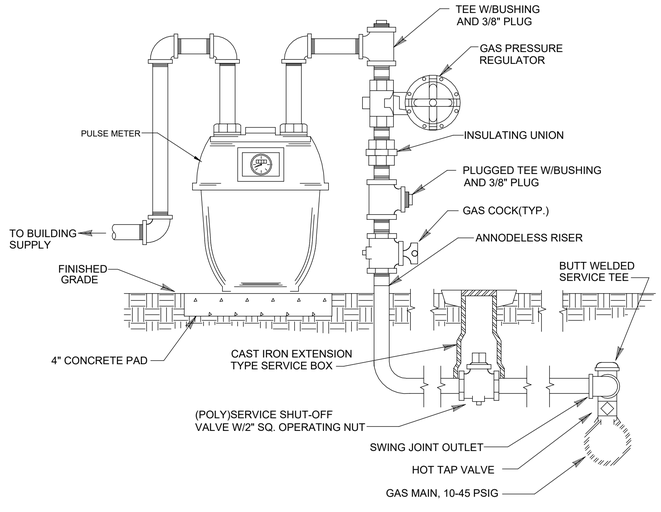

NOTE: LINE SIZES AS CALLED FOR ON SITE PLAN

3 GAS CONNECTION TO EQUIPMENT

SCALE: N.T.S.

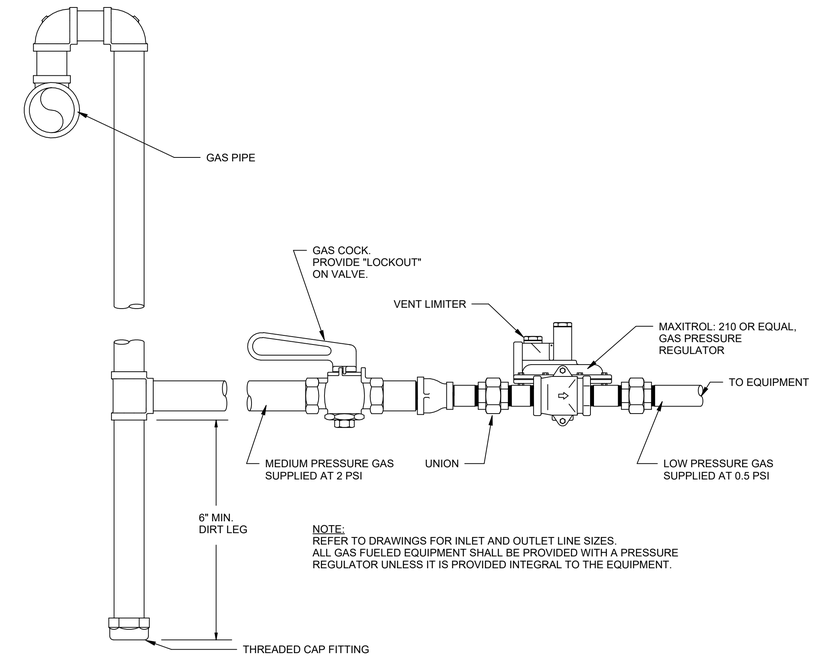

NOTE:
REFER TO DRAWINGS FOR INLET AND OUTLET LINE SIZES.
ALL GAS FUELED EQUIPMENT SHALL BE PROVIDED WITH A PRESSURE REGULATOR UNLESS IT IS PROVIDED INTEGRAL TO THE EQUIPMENT.

NO	DATE	REVISION	APP.

RPS A TETRA TECH COMPANY
Texas PE Firm Reg. #F-929
575 N. Dairy Ashford, Suite 700, Houston, Texas 77079
T +1 281 589 7257
E usinfrastructure@rpsgroup.com

SURVEYED BY: KUO INC.
FB NO. F-4578

This document is released for the purposes of interim review only under the authority of:

Luke Ramirez, P.E.
Texas P.E. No. 128371
2/16/26

It is not to be used for bidding, construction, or permitting purposes.

CITY OF HOUSTON

HOUSTON PUBLIC WORKS

RECONSTRUCTION & REHABILITATION
COH LIFT STATIONS

STANDARD PLUMBING DETAILS

STD-P-2

WBS NUMBER	FOR CITY OF HOUSTON USE ONLY
R-000267-0178-3	
DRAWING SCALE	
AS NOTED	
CITY OF HOUSTON PM	
TAHA LOTIA	
SHEET NO. 47 OF 268	

PLOTTED: 3/27/2026 9:39:54 AM
PLOT STYLE:
Autodesk Docs://200-317106-24001 COH LS Rehab Design/M-LIFT STATIONS-200-317106-24001_v25.rvt

PLOTTED 3/30/2026 10:01:18 AM
PLOT STYLE:
Autodesk Docs://200-317106-24001 COH LS Rehab Design/S-LIFT STATIONS-200-317106-24001_v25.rvt

STRUCTURAL GENERAL NOTES

1. THESE GENERAL NOTES PRESENT AND/OR SUMMARIZE KEY PROJECT INFORMATION FOR THE DRAWING READER'S CONVENIENCE. SEE ALSO INDIVIDUAL DRAWING NOTES AND PROJECT SPECIFICATIONS FOR FURTHER DETAILS AND REQUIREMENTS.
2. ALL REFERENCED STANDARDS HEREIN ARE TO MOST RECENT ISSUE IN EFFECT AS OF THE DATE OF THESE DOCUMENTS, UNLESS NOTED OTHERWISE IN PROJECT SPECIFICATIONS OR ON THE DRAWING.
3. DATUM ELEVATION IS SITE/CIVIL ELEVATIONS. ALL ELEVATIONS ARE TO BE VERIFIED WITH CIVIL DRAWINGS.
4. ALL EXISTING DIMENSIONS SHOWN WITH THE ± SYMBOL ARE APPROXIMATE AND SHALL BE FIELD VERIFIED BY THE CONTRACTOR BEFORE FABRICATION AND CONSTRUCTION.
5. DIMENSIONS MARKED WITH A "X" SHALL BE DETERMINED BY EQUIPMENT MANUFACTURER AND COORDINATED BY CONTRACTOR
6. SUBMIT SHOP DRAWINGS, PROJECT DATA AND SAMPLES AS SPECIFIED IN PROJECT SPECIFICATIONS.
7. ABBREVIATIONS:

ADD'L	ADDITIONAL
AISC	AMERICAN INSTITUTE OF STEEL CONSTRUCTION
ALUM.	ALUMINUM
APPROX.	APPROXIMATE
ARCH.	ARCHITECT(URAL)
B.M.	BEAM
B.O.F	BOTTOM OF FOOTING
B.O.S.	BOTTOM OF STEEL
BLDG.	BUILDING
BOT.	BOTTOM
BRG.	BEARING
BTWN	BETWEEN
CCJ	CRACK CONTROL JOINT
CJ	CONSTRUCTION JOINT
CL	CENTER LINE
CLR	CLEAR
COH	CITY OF HOUSTON
COL	COLUMN
CONC	CONCRETE
CONST	CONSTRUCTION
CONT	CONTINUOUS
COORD	COORDINATE
CTR	CENTER
DBA	DEFORMED BAR ANCHOR
DEMO	DEMOLISH
DIA	DIAMETER
DIM	DIMENSION
DIST	DISTANCE
DN	DOWN
DTL.	DETAIL
DWG(S)	DRAWING(S)
DWL	DOWEL
E/EX/EXIST.	EXISTING
EA	EACH
EF	EACH FACE
EJ	EXPANSION JOINT
EL / ELEV.	ELEVATION
ELEC	ELECTRIC(AL)
ENGR	ENGINEER
EQ	EQUAL
EQUIP	EQUIPMENT
EW	EACH WAY
EXP	EXPANSION
F.S.	FAR SIDE
F.V.	FIELD VERIFY
FD	FLOOR DRAIN
FFE	FINISH FLOOR ELEVATION
FIN	FINISH (ED)
FLG.	FLANGE
FLR	FLOOR
FND.	FOUNDATION
FRMG	FRAMING
FT	FOOT
FTG	FOOTING
GA	GAGE, GAUGE
GALV	GALVANIZED
GR.	GRADE
GRTG	GRATING
H.P.	HIGH POINT
H.R.	HAND RAIL
HK	HOOK
HORIZ	HORIZONTAL
HR	HEATHER RIDGE
HT	HEIGHT
HVAC	HEATING VENTILATION AND AIR CONDITIONING
I.D.	INSIDE DIAMETER
I.F.	INSIDE FACE
I.J.	ISOLATION JOINT
IN.	INCH
INSUL	INSULATION
L	ANGLE
L.P.	LOW POINT
LBS	POUNDS
LF	LINEAR FOOT (FEET)
LLH	LONG LEG HORIZONTAL
LLV	LONG LEG VERTICAL
LOC	LOCATION
MATL	MATERIAL
MAX	MAXIMUM
MECH	MECHANICAL
MFR	MANUFACTURER
MID	MIDDLE / MIDPOINT
MIN	MINIMUM, MINUTE
MISC.	MISCELLANEOUS
MTL	METAL
N	NEW
N.S.	NEAR SIDE
N.T.S.	NOT TO SCALE
NA	NOT APPLICABLE
NO	NUMBER
NOM	NOMINAL
O.C.	ON CENTER
O.D.	OUTSIDE DIAMETER
OPH	OPPOSITE HAND
OPNG	OPENING
OPP	OPPOSITE
ORIG	ORIGINAL
PERP	PERPENDICULAR
PL	PLATE
PLF	POUNDS PER LINEAR FOOT
PREFAB	PREFABRICATED
PSF	POUNDS PER SQUARE FOOT
PSI	POUNDS PER SQUARE INCH
QTY	QUANTITY
R	RISER
RAD.	RADIUS
REF	REFERENCE
REINF.	REINFORCEMENT
REQ/REQ'D	REQUIRED
REV	REVISION
RO	ROUGH OPENING
SCHED	SCHEDULE
SF	SQUARE FOOT
SHT.	SHEET
SIM.	SIMILAR
SM	SHADY MAPLES
SPA.	SPACE
SPEC	SPECIFICATIONS
SQ	SQUARE
SS	STAINLESS STEEL
STAG.	STAGGER
STD	STANDARD
STL	STEEL
STRUCT	STRUCTURE(AL)
SYM	SYMMETRICAL
T	TREAD
T/	TOP OF
TEMP	TEMPORARY
THK	THICKNESS
TOF	TOP OF FOOTING
TOS	TOP OF SLAB
TRANSV.	TRANSVERE
TYP	TYPICAL
UNO	UNLESS NOTED OTHERWISE
V.I.F.	VERIFY IN FIELD
VERT	VERTICAL
W.P.	WORK POINT
W/	WITH
W/O	WITHOUT
WC	WILL CLAYTON
WS	WATER STOP

FOUNDATIONS

1. **(GEOTECH REPORT - PENDING)** SEE GEOTECHNICAL/SUBSURFACE INVESTIGATION REPORT BY **XXXXXXXXXX**, DATED **XXXX**. IT SHALL BE THE CONTRACTOR'S RESPONSIBILITY TO DETERMINE WHETHER OR NOT ADDITIONAL GEOTECHNICAL INFORMATION IS REQUIRED AND TO PROVIDE SUCH INFORMATION AS THE CONTRACTOR DEEMS NECESSARY AT NO ADDITIONAL COST TO THE OWNER.
2. ALLOWABLE BEARING PRESSURES AS FOLLOWS:

   A. WET WELL MAT FOUNDATIONS: **XXXXX** PSF
   B. SHALLOW FOUNDATIONS: **XXXXX** PSF (BEARING NEAR GRADE)

3. GEOTECHNICAL ENGINEER SHALL BE RETAINED BY THE CONTRACTOR TO PROVIDE OBSERVATION AND TESTING SERVICES DURING THE GRADING AND FOUNDATION PHASE OF CONSTRUCTION. INSPECTION AND TESTING REPORTS SHALL BE SUBMITTED TO THE STRUCTURAL ENGINEER.
4. SUBGRADE PREPARATION: **(REQUIREMENTS PENDING GEOTECH REPORT)**
5. PRIOR TO PLACING ENGINEERED FILL, THE SITE SHALL BE STRIPPED AND PROOF ROLLED. ANY SOFT SPOTS ENCOUNTERED SHALL BE REMOVED AND REPLACED WITH ENGINEERED FILL. REFER TO EARTHWORK SPECIFICATION FOR ADDITIONAL INFORMATION.
6. FOR STRUCTURES WITH CONCRETE TOP SLABS, THERE SHALL BE NO BACKFILLING OPERATIONS UNTIL THE TOP SLAB IS IN PLACE, HAS BEEN CURED A MINIMUM OF 7 DAYS, AND HAS REACHED 70% OF ITS 28 DAY DESIGN STRENGTH, UNLESS NOTED OTHERWISE OR APPROVED BY THE ENGINEER.
7. THERE SHALL BE NO BACKFILLING OPERATIONS UNTIL THE CONCRETE WALLS HAVE REACHED THEIR 28 DAY DESIGN STRENGTH, UNLESS NOTED OTHERWISE OR APPROVED BY THE ENGINEER IN WRITING.
8. HEAVY EQUIPMENT OR WHEELED/TRACKED VEHICLES EXCEEDING 20 PSF CONTACT PRESSURE ARE NOT ALLOWED ON ELEVATED SLABS, ROOFS, OR WITHIN 10 FT OF EARTH RETAINING WALLS UNLESS NOTED OTHERWISE ON PLANS OR APPROVED BY STRUCTURAL ENGINEER OF RECORD PRIOR TO CONSTRUCTION.

DESIGN CRITERIA

1. REFERENCES:

   A. ICC INTERNATIONAL BUILDING CODE, 2021 EDITION, RISK CATEGORY III IN ACCORDANCE WITH TABLE 1604.5
   B. ASCE/SEI 7-16 - MINIMUM DESIGN LOADS FOR BUILDINGS AND OTHER STRUCTURES
   C. CITY OF HOUSTON DEPARTMENT OF PUBLIC WORKS AND ENGINEERING, ENGINEERING DESIGN MANUAL FOR SUBMERSIBLE LIFT STATIONS.

2. DEAD LOADS: = (SELF WEIGHT)
3. LIVE LOADS (U.N.O.):

ELEVATED TOP SLABS	= 300 PSF
STAIRS, WALKWAYS, OR PLATFORMS	= 100 PSF
PROCESS FLOORS	= 200 PSF

4. FROST DEPTH = 6" (PENDING GEOTECH CONFIRMATION)
5. ROOF SNOW LOAD: = 0 (NOT APPLICABLE)
6. WIND LOAD:

BASIC DESIGN WIND SPEED, V	= 145 MPH
NOMINAL DESIGN WIND SPEED, Vasd	= 113 (Vult*√0.6) MPH
RISK CATEGORY	= III
WIND EXPOSURE CATEGORY	= C
DIRECTIONALITY FACTOR, Kd	= 0.85
TOPOGRAPHIC FACTOR, Kzt	= 1.0
INTERNAL PRESSURE COEFFICIENT, GCpi	= N/A
BUILDING ENCLOSURE CLASSIFICATION	= N/A

7. SEISMIC DESIGN DATA:

RISK CATEGORY	= III
SEISMIC IMPORTANCE FACTOR, Ie	= 1.25
SDS	= 0.072
SD1	= 0.062
SS	= 0.068
S1	= 0.039
SITE CLASS	= D (PENDING GEOTECH CONFIRMATION)
SEISMIC DESIGN CATEGORY	= A (PENDING GEOTECH CONFIRMATION)
RESPONSE MODIFICATION FACTOR, R	= 4
BASIC SEISMIC FORCE RESISTING SYSTEM	= ORDINARY REINFORCED CONCRETE WALLS
SEISMIC RESPONSE COEFFICIENT, Cs	= 0.023
DESIGN BASE SHEAR:	= 0.01*W KIPS
ANALYSIS PROCEDURE:	= NOTIONAL LOADS (ASCE 7-16, 1.4)

NO	DATE	REVISION	APP.

RPS A TETRA TECH COMPANY
Texas PE Firm Reg. #F-929
575 N. Dairy Ashford, Suite 700, Houston, Texas 77079
T +1 281 589 7257
E usinfrastructure@rpsgroup.com

SURVEYED BY: KUO Inc.
FB NO. F-4578

This document is released for the purposes of interim review only under the authority of:

Phillip A. Fleming, P.E.
Texas P.E. No. 131982
2/10/26

It is not to be used for bidding, construction, or permitting purposes.

CITY OF HOUSTON
HOUSTON PUBLIC WORKS

RECONSTRUCTION & REHABILITATION
COH LIFT STATIONS

STRUCTURAL GENERAL NOTES

S-1

WBS NUMBER	FOR CITY OF HOUSTON USE ONLY
R-000267-0178-3	
DRAWING SCALE	
AS NOTED	
CITY OF HOUSTON PM	
TAHA LOTIA	
SHEET NO. 48 OF 268	

CONCRETE

1. REFERENCES

   A. ACI 318-19 BUILDING CODE REQUIREMENTS FOR STRUCTURAL CONCRETE
   B. ACI 350-06 CODE REQUIREMENTS FOR ENVIRONMENTAL ENGINEERING CONCRETE STRUCTURES
   C. ACI SP-66 ACI DETAILING MANUAL
   D. ACI 301-16 SPECIFICATION FOR STRUCTURAL CONCRETE
   E. ACI 117-10 SPECIFICATION FOR TOLERANCES FOR CONCRETE CONSTRUCTION AND MATERIALS
   F. CRSI MSP-2-01 MANUAL OF STANDARD PRACTICE
   G. CRSI REINFORCING BAR DETAILING
   H. CRSI PLACING REINFORCING BARS

2. MATERIALS

   A. STRUCTURAL CONCRETE

      a. MINIMUM COMPRESSIVE STRENGTH AT 28 DAYS (f'c): 4,500 PSI
      b. UNLESS NOTED OTHERWISE ON THE PLANS, ALL CONCRETE TO HAVE THE FOLLOWING EXPOSURE CLASSIFICATION AS DEFINED IN ACI 318-19, CHAPTER 19: F2, S0, W2, C1
      c. ALL CONCRETE EXPOSED TO THE ELEMENTS SHALL BE AIR-ENTRAINED IN ACCORDANCE WITH ASTM C260. SEE SPECIFICATIONS.
      d. ALL CONCRETE AGGREGATE SHALL COMPLY WITH ASTM C33 (NORMAL WEIGHT).
      e. WATER TO CEMENT RATIO (MAX) = 0.44
      f. WATER-REDUCING ADMIXTURE: ASTM C 494, TYPE A.
      g. PROHIBITED ADMIXTURES: CALCIUM CHLORIDE THYOCYANATES OR ADMIXTURES CONTAINING MORE THAN 0.1 PERCENT CHLORIDE IONS.

   B. REINFORCEMENT

      a. REINFORCING BARS: ASTM A615, GRADE 60

   C. CAST-IN-PLACE ANCHOR RODS

      a. SHALL BE GALVANIZED, FURNISHED WITH CHAMFERED ENDS, AND SHALL MEET STRENGTH AND DUCTILITY REQUIREMENTS EQUIVALENT ASTM F1554, GR 55 WELDABLE MATERIAL.

   D. GROUT: HIGH STRENGTH, NON-SHRINK STRUCTURAL GROUT. SEE SPECIFICATIONS.

3. REINFORCEMENT DETAILING

   A. ALL REINFORCING STEEL DETAILS SHALL BE IN ACCORDANCE WITH THE ACI CODE REQUIREMENTS (ACI 350 - CURRENT EDITION).
   B. REINFORCING STEEL PLACING DRAWINGS AND BAR LISTS SHALL CONFORM TO THE ACI OR CRSI DETAILING MANUALS. ALL BAR SUPPORTS MUST BE CLEARLY DETAILED
   C. CONCRETE COVER FOR REINFORCING SHALL BE INDICATED ON THE APPLICABLE REINFORCING STEEL SHOP DRAWINGS. HOWEVER, NO REINFORCING IN AREAS EXPOSED TO EARTH, WEATHER, SEWAGE OR WATER SHALL HAVE COVER LESS THAN TWO INCHES.
   D. SPECIFIED COVER FOR REINFORCING PER ACI 350 (WATER CONTAINMENT STRUCTURES):

FOOTINGS (BOTTOM)	3.0"
FOOTINGS (TOP)	2.0"
BEAMS (PRIMARY REINF)	2.5"
BEAMS (STIRRUPS/ TIES)	2.0"
WALLS	2.0"
SUSPENDED SLABS (BOTTOM)	2.0"
SUSPENDED SLABS (TOP)	2.0"
SLAB-ON-GRADE (REBAR)	2" FROM TOP OF SLAB (U.N.O.)

   E. REINFORCEMENT IN WALLS SHALL BE CONTINUOUS. HORIZONTAL BAR LAP SPLICES SHALL BE STAGGERED
   F. PROVIDE CORNER BARS AT ALL WALL AND FOUNDATION CORNERS, AND LAP WITH THE HORIZONTAL BARS. CORNER BARS ARE TO MATCH THE HORIZONTAL BARS IN SIZE, GRADE AND SPACING UNLESS OTHERWISE SHOWN.
   G. HOOKS AND BENDS SHALL MEET ACI STANDARD UNLESS OTHERWISE INDICATED.
   H. SPLICES: CONTINUOUS REINFORCING BARS SHALL BE FURNISHED WITH CLASS 'B' TENSION LAPS SPLICES INCLUDING CORNER BARS, UNLESS NOTED OTHERWISE.
   I. MECHANICAL SPLICES SHALL NOT BE PERMITTED UNLESS SHOWN ON THE DRAWINGS OR APPROVED BY THE ENGINEER
   J. REINFORCING STEEL FABRICATION AND PLACEMENT SHALL BE IN ACCORDANCE WITH CRSI MANUAL OF STANDARD PRACTICE AND CRSI PLACING REINFORCING BARS (LATEST EDITIONS).
   K. REINFORCING STEEL IN FOOTINGS SHALL BE ASSEMBLED IN MAT GRILLES EQUALLY SPACED AND SECURELY WIRED TOGETHER BEFORE THE CONCRETE IS POURED.
   L. WALL FOOTING DOWELS ARE TO HAVE A FULL TENSION LAP SPLICE WITH THE WALL STEEL UNLESS NOTED OTHERWISE.
   M. PIER REINFORCEMENT SHALL BE DOWELED TO THE FOOTING. PROVIDE DOWELS EQUAL IN SIZE, NUMBER AND GRADE TO THE PIER REINFORCEMENT UNLESS OTHERWISE INDICATED. DOWELS SHALL BE HOOKED 90 DEGREES AT THE BOTTOM LEVEL OF FOOTING REINFORCEMENT. DOWELS SHALL BE LAPPED WITH THE PIER REINFORCEMENT
   N. SPREAD BARS AROUND SMALL OPENINGS AND SLEEVES IN SLABS AND WALLS WHERE POSSIBLE AND WHERE BAR SPACING WILL NOT EXCEED 1.5 TIMES THE NORMAL SPACING. DISCONTINUE BARS AT LARGE OPENINGS WHERE NECESSARY AND PROVIDE AN AREA OF REINFORCEMENT EQUAL TO THE INTERRUPTED REINFORCEMENT DISTRIBUTING ONE-HALF OF THIS REINFORCEMENT EACH SIDE OF THE OPENING (TENSION LAP SPLICED). HOLES LARGER THAN 12 INCHES IN ANY DIRECTION SHALL HAVE (2) #6 X 4'-0" DIAGONAL BARS IN BOTH FACES AT EACH CORNER
   O. ALL REINFORCING SHALL BE HELD SECURELY IN POSITION WITH STANDARD ACCESSORIES IN CONCRETE
   P. NO REINFORCING STEEL SHALL BE FIELD BENT WITHOUT THE APPROVAL OF THE STRUCTURAL ENGINEER. FIELD BENDING OF PLAIN REINFORCEMENT, IF PERMITTED, SHALL BE PERFORMED USING AN APPROVED AND APPROPRIATE SIZED PORTABLE HYDRAULIC DEVICE THAT MAKES ACI STANDARD RADIUS BENDS. NO OTHER FIELD BENDING METHOD SHALL BE PERMITTED.
   Q. WELDING, INCLUDING TACK WELDING, FOR REINFORCING STEEL IS PROHIBITED. WELDING OF REINFORCING STEEL AND HIGH STRENGTH BOLTS, IE. A36, F1554, WILL BE PERMITTED ONLY BY WRITTEN APPROVAL OF THE ENGINEER.
   R. ALL OPENINGS THROUGH WALLS, SLABS OR OTHER STRUCTURAL ELEMENTS NOT DETAILED ON THE STRUCTURAL DRAWINGS MUST BE LOCATED BY THE CONTRACTOR AND SHOWN ON THE APPLICABLE REINFORCING STEEL SHOP DRAWINGS. THE FINAL LOCATION OF ALL OPENINGS MUST BE REVIEWED BY THE ENGINEER BEFORE THE CONCRETE IS POURED.
   S. MODIFICATION AND REPAIR TO EXISTING CONCRETE:

      a. SEE CONCRETE SPECIFICATIONS FOR COMPLETE EXPLANATION.
      b. CONNECTION METHODS:

         1. METHOD A - BONDING TO SATURATED SURFACE
         2. METHOD B - BONDING BY USING BONDING AGENT
         3. METHOD C - DOWELS USING EPOXY BONDING AGENT

CONCRETE - (CONTINUED)

4. FORMWORK

   A. SEE SPECIFICATIONS
   B. CAMBER: PROVIDE CAMBER TO COMPENSATE FOR DISPLACEMENT OF FORMS (SEE ALSO SPECS.) AND TO PROVIDE AS-CAST MEMBER CAMBER AS NOTED ON DRAWINGS.
   C. RUSTICATION STRIPS, CHAMFERS, DRIPS, MISC. EMBEDS, ETC. SEE DRAWINGS AND/OR ARCHITECTURAL DRAWINGS.
   D. PROVIDE 3/4" CHAMFER AT ALL EXPOSED CORNERS OF BEAMS, WALLS ETC. UNLESS OTHERWISE NOTED.
   E. OPENINGS FOR MEP TRADES ARE TO BE INCLUDED IN THE BID. ALL HOLES FOR OTHER TRADES WHICH MUST BE CUT OR FORMED AND WHICH ARE NOT SHOWN ON THE STRUCTURAL DESIGN DRAWINGS SHALL BE SUBMITTED TO THE STRUCTURAL ENGINEER FOR REVIEW AND APPROVAL. ANY STRENGTHENING OR ADDITIONAL REINFORCEMENT REQUIRED SHALL BE FURNISHED BY THE CONTRACTOR WITHOUT ADDITIONAL COST TO THE OWNER.

5. CONCRETE FINISHES: SEE SPECIFICATIONS

   A. FORMED SURFACES:

      a. EXPOSED TO VIEW: RUBBED FINISH
      b. COVERED OR AS NOTED ON PLANS: AS-CAST (PATCH TIE HOLES, SEE SPECS)

   B. FLATWORK:

      a. EXPOSED TO VIEW: TROWELED
      b. STAIRS OR RAMPS: BROOMED
      c. TOP SLABS, SIDEWALKS, DRIVEWAYS: BROOMED

6. CURING AND PROTECTION: SEE SPECIFICATIONS.

7. SEE THE MECHANICAL, ELECTRICAL AND SUPPLIERS DRAWINGS AND THE SPECIFICATIONS FOR THE LOCATIONS OF SPECIAL ANCHORS, CHAMFERS, SLEEVES, PIPES, CONDUITS AND OTHER DETAILS NOT SHOWN ON THE STRUCTURAL DRAWINGS.

8. EMBEDDED PIPES OR CONDUIT. MAXIMUM DIAMETER ONE THIRD x SLAB OR WALL THICKNESS, SPACED MINIMUM OF 3 TIMES DIAMETER ON CENTER. ALL EMBEDDED PIPES OR CONDUITS SHALL BE APPROVED BY ENGINEER OF RECORD PRIOR TO INSTALLING

9. SIZE AND LOCATION OF EQUIPMENT PADS AND ANCHOR BOLTS SHALL BE AS REQUIRED BY THE EQUIPMENT MANUFACTURER. ALL CONDUIT PLACED IN SLAB SHALL BE APPROVED BY STRUCTURAL ENGINEER OF RECORD PRIOR TO INSTALLING CONDUIT AND POURING SLAB.

10. ANY CONSTRUCTION JOINTS IN STRUCTURES WHERE WATERSTOPS ARE USED SHALL BE PROTECTED BY WATERSTOP UNLESS OTHERWISE NOTED. CONTRACTOR SHALL SUBMIT A CONSTRUCTION JOINT LAYOUT PLAN FOR APPROVAL BY THE ENGINEER OF RECORD PRIOR TO CONSTRUCTION.

11. CONTRACTOR SHALL DESIGN, FURNISH, INSTALL, TEST, OPERATE, MONITOR, AND MAINTAIN A DEWATERING SYSTEM TO CONTROL HYDROSTATIC PRESSURE AND GROUND WATER ENTERING THE EXCAVATION.

12. SUBMITTALS

   A. CONTRACTOR SHALL BE RESPONSIBLE FOR SUBMITTING THE FOLLOWING DOCUMENTS TO THE ENGINEER OF RECORD:

      a. CONCRETE MIX DESIGN
      b. CONCRETE REINFORCING DRAWINGS

CONCRETE POST-INSTALLED ANCHORS

1. MECHANICAL (TORQUE-CONTROLLED) ANCHORS

   A. APPROVED SYSTEMS INCLUDE HILTI KWIK BOLT TZ (ICC ESR 1917) OR HILTI KWIK HUS-EZ (ICC ESR 3027) OR EQUAL CONSIDERING LOAD RESISTANCE. MECHANICAL ANCHORS SHALL BE APPROVED FOR USE WITH CRACKED CONCRETE PER AC 193. CURRENT ICC-ESR SHALL BE SUBMITTED. ALL PERSONNEL INSTALLING ANCHORS SHALL BE TRAINED BY THE MANUFACTURER ON PROPER INSTALLATION TECHNIQUE. TRAINING DOCUMENTATION FROM THE MANUFACTURER SHALL BE AVAILABLE ON REQUEST

2. ADHESIVE ANCHORS

   A. APPROVED SYSTEMS INCLUDE HILTI HIT-RE 500 V3 (ICC ESR 3814) OR HILTI HIT-HY 200 ADHESIVE WITH HAS/HIT-V THREADED ROD WITH SAFESET TECHNOLOGY (ICC ESR 3187) OR EQUAL CONSIDERING LOAD RESISTANCE, IN-SERVICE AND INSTALLATION TEMPERATURE, AVAILABILITY OR COMPREHENSIVE INSTALLATION INSTRUCTIONS, AND CREEP. ADHESIVE ANCHORS SHALL BE APPROVED FOR USE WITH CRACKED CONCRETE PER AC 308. CURRENT ICC-ESR SHALL BE SUBMITTED.
   B. ALL PERSONNEL INSTALLING ANCHORS SHALL BE TRAINED BY THE MANUFACTURER ON PROPER INSTALLATION TECHNIQUE. TRAINING DOCUMENTATION FROM THE MANUFACTURER SHALL BE AVAILABLE ON REQUEST.
   C. HOLE SIZES AND INSTALLATION SHALL BE IN ACCORDANCE WITH MANUFACTURER'S PRINTED INSTALLATION INSTRUCTIONS (MPII)
   D. ADHESIVE FOR REBAR AND ANCHORS SHALL HAVE BEEN TESTED IN ACCORDANCE WITH ACI 355.4 AND ICC-ES AC308 FOR CRACKED CONCRETE AND SEISMIC APPLICATIONS. DESIGN ADHESIVE BOND STRENGTH SHALL BE BASED ON ACI 355.4 TEMPERATURE CATEGORY C WITH INSTALLATIONS INTO DRY HOLES DRILLED USING A CARBIDE DRILL BIT INTO CONCRETE THAT HAS BEEN CURED FOR AT LEAST 21 DAYS.
   E. ANY ADHESIVE ANCHOR INSTALLED HORIZONTALLY OR IN A VERTICALLY INCLINED PLANE SHALL BE INSTALLED BY CERTIFIED ADHESIVE ANCHOR INSTALLER, PER ACI 318-19 17.8.2.2, AND SHALL BE INSPECTED PER ACI 318-19 17.8.2.4.
   F. FILL IN ALL ABANDONED HOLES WITHIN 2" OF NEW ANCHOR LOCATIONS.
   G. WHERE REQUIRED, A PROGRAM FOR ON-SITE PROOF LOADING, THAT IS, PROOF LOADING PROGRAM, TO BE CONDUCTED AS PART OF THE SPECIAL INSPECTION AND SHALL BE ESTABLISHED BY THE ENGINEER OR DESIGN PROFESSIONAL OF RECORD AND SHALL CONFORM TO THE FOLLOWING MINIMUM REQUIREMENTS:

      a. FREQUENCY OF PROOF LOADING BASED ON ANCHOR TYPE, DIAMETER, AND EMBEDMENT.
      b. PROOF LOADS BY ANCHOR TYPE, DIAMETER, EMBEDMENT, AND LOCATION.
      c. ACCEPTABLE DISPLACEMENTS AT PROOF LOAD.
      d. REMEDIAL ACTION IN THE EVENT OF FAILURE TO ACHIEVE PROOF LOAD OR EXCESSIVE DISPLACEMENT.

      UNLESS OTHERWISE DIRECTED BY THE ENGINEER OR DESIGN PROFESSIONAL OF RECORD, PROOF LOADS SHALL BE APPLIED AS CONFINED TENSION TESTS (4.7.2.3). PROOF LOADS LEVELS SHALL NOT EXCEED THE LESSER OF 50 PERCENT OF THE EXPECTED PEAK LOAD BASED ON ADHESIVE BOND STRENGTH, OR 80 PERCENT OF THE ANCHOR YIELD STRENGTH. MAINTAIN THE PROOF LOAD AT THE REQUIRED LOAD LEVEL FOR A MINIMUM OF 10 SECONDS.

3. EQUIPMENT ANCHORS:
   A. SIZE, LENGTH, AND LOCATION OF EQUIPMENT ANCHORS SHALL BE PROVIDED BY EQUIPMENT MANUFACTURER.

TENSION DEVELOPMENT / LAP SPLICE SCHEDULE (UNCOATED BARS)

BAR SIZE	DEVELOPMENT / LAP SPLICE LENGTH IN CONCRETE (f'c = 4500 PSI)						
	DEVELOPMENT LENGTH (IN)		CLASS 'B' LAP SPLICE LENGTH (IN)		STD 90 DEG. HOOK (IN)		
	BAR TYPE 1	BAR TYPE 2	BAR TYPE 1	BAR TYPE 2	EMBED	LEG LENGTH	BEND DIA.
4	18	27	24	35	9	8	3
5	23	34	30	44	12	10	3 3/4
6	27	41	35	53	14	12	4 1/2
7	40	59	51	77	16	14	5 1/4
8	45	67	59	88	18	16	6
9	51	76	66	99	21	20	9 1/2
10	57	86	74	111	23	22	10 1/4

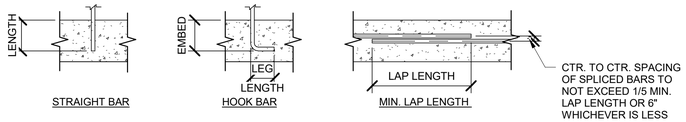

STRAIGHT BAR | HOOK BAR | MIN. LAP LENGTH

BAR TYPE 1 - CLEAR SPACING OF BARS BEING DEVELOPED OR SPLICED NOT LESS THAN Db, CLEAR COVER NOT LESS THAN Db, AND STIRRUPS OR TIES THROUGHOUT Ld NOT LESS THAN CODE MINIMUM

OR

CLEAR SPACING OF BARS BEING DEVELOPED OR SPLICED NOT LESS THAN 2"Db AND CLEAR COVER NOT LESS THAN Db.

BAR TYPE 2 - TOP BARS WITH MORE THAN 12" OF FRESH CONCRETE CAST BELOW **AND** OTHER CASES

NO.	DATE	REVISION	APP.

A TETRA TECH COMPANY
Texas PE Firm Reg. #F-929
575 N. Dairy Ashford, Suite 700, Houston, Texas 77079
T +1 281 589 7257
E usinfrastructure@rpsgroup.com

SURVEYED BY: KUO Inc.
FB NO. F-4578

This document is released for the purposes of interim review only under the authority of:

Phillip A. Fleming, P.E.
Texas P.E. No. 131982
2/10/26

It is not to be used for bidding, construction, or permitting purposes.

CITY OF HOUSTON

HOUSTON PUBLIC WORKS

RECONSTRUCTION & REHABILITATION
COH LIFT STATIONS

STRUCTURAL GENERAL NOTES

S-2

WBS NUMBER	FOR CITY OF HOUSTON USE ONLY
R-000267-0178-3	
DRAWING SCALE	
AS NOTED	
CITY OF HOUSTON PM	
TAHA LOTIA	
SHEET NO. 49 OF 268	

PLOTTED 3/30/2026 10:01:18 AM
PLOT STYLE:
Autodesk Docs://200-317106-24001 COH LS Rehab Design/S-LIFT STATIONS-200-317106-24001_v25.rvt

PLOTTED 3/30/2026 10:01:19 AM
PLOT STYLE:
Autodesk Docs://200-317106-24001 COH LS Rehab Design/S-LIFT STATIONS-200-317106-24001_v25.rvt

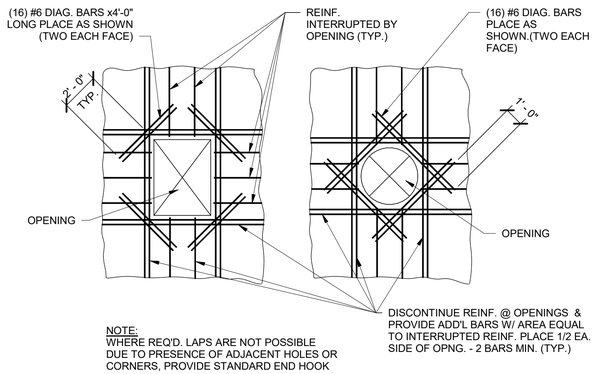

1 STD-S-1 REINF. STEEL @ OPENING
SCALE: NTS

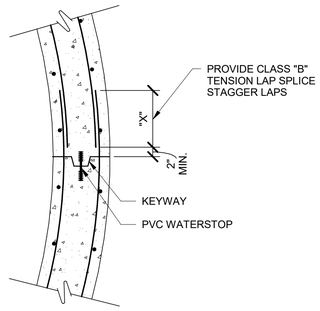

2 STD-S-1 WALL JOINT
SCALE: NTS

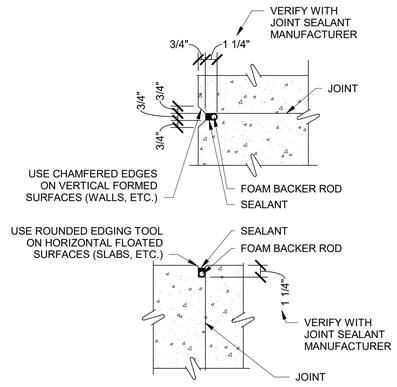

3 STD-S-1 CONTROL JOINT SEALANT
SCALE: NTS

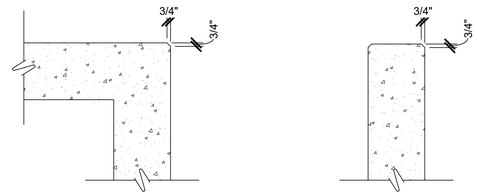

4 STD-S-1 CHAMFER DETAILS
SCALE: NTS

NO.	DATE	REVISION	APP.

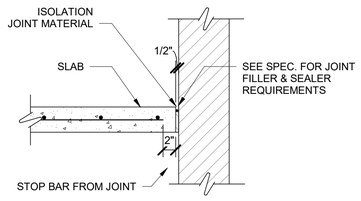

5 STD-S-1 SLAB TO WALL ISOLATION JOINT
SCALE: NTS

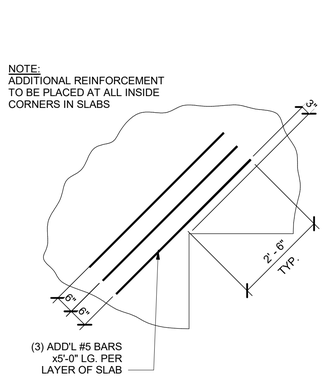

6 STD-S-1 REINF. SLAB RE-ENTRANT CORNER
SCALE: NTS

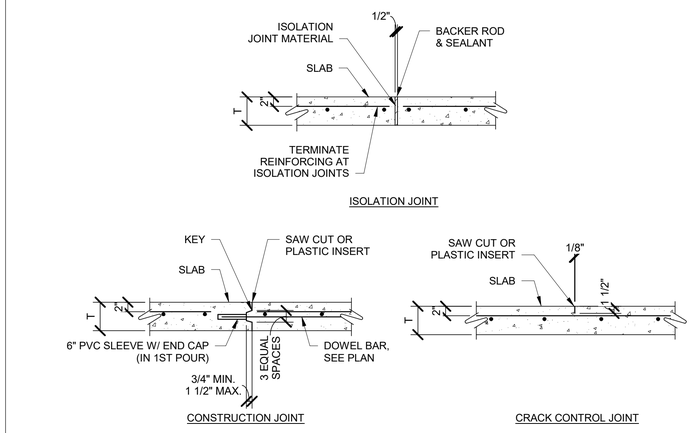

7 STD-S-1 TYP. REINF SLAB DETAILS
SCALE: NTS

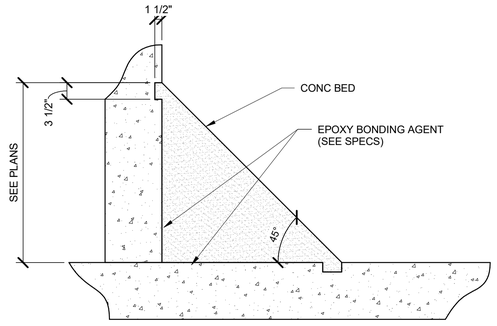

8 STD-S-1 CONCRETE FILLET DETAIL
SCALE: NTS

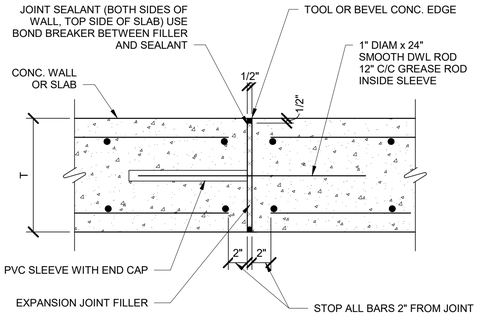

9 STD-S-1 EXPANSION JOINT
SCALE: NTS

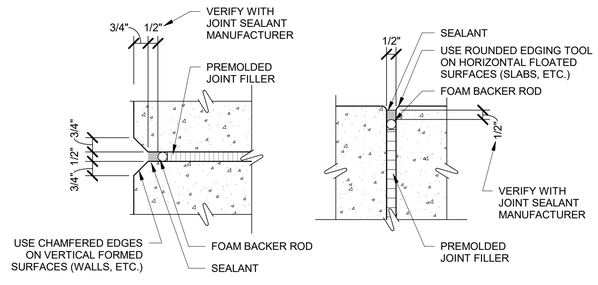

10 STD-S-1 EXPANSION JOINT SEALANT DETAIL
SCALE: NTS

rps
A TETRA TECH COMPANY
Texas PE Firm Reg. #F-929
575 N. Dairy Ashford, Suite 700,
Houston, Texas 77079
T +1 281 589 7257
E usinfrastructure@rpsgroup.com

SURVEYED BY: KUO Inc.
FB NO. F-4578

This document is released for the purposes of interim review only under the authority of:

Phillip A. Fleming, P.E.
Texas P.E. No. 131982
2/10/26

It is not to be used for bidding, construction, or permitting purposes.

CITY OF HOUSTON
HOUSTON PUBLIC WORKS

RECONSTRUCTION & REHABILITATION
COH LIFT STATIONS

STRUCTURAL STANDARD DETAILS

STD-S-1

WBS NUMBER	FOR CITY OF HOUSTON USE ONLY
R-000267-0178-3	
DRAWING SCALE	
AS NOTED	
CITY OF HOUSTON PM	
TAHA LOTIA	
SHEET NO. 50 OF 268	

PLOTTED 3/30/2026 10:01:19 AM
PLOT STYLE:
Autodesk Docs://200-317106-24001 COH LS Rehab Design/S-LIFT STATIONS-200-317106-24001_v25.rvt

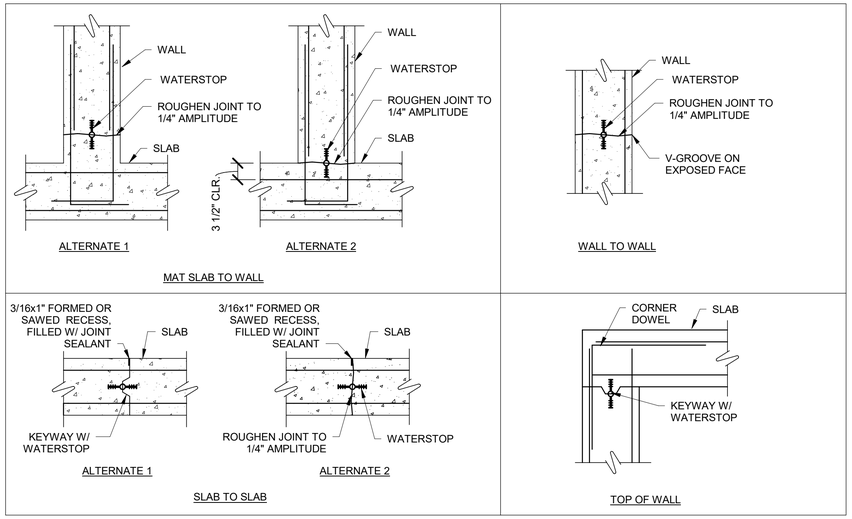

WATERTIGHT CONSTRUCTION JOINTS
6"x3/8" PVC WATERSTOP (SIKA GREEN STREAK PROFILE NO. 732) SHALL BE USED ALL LOCATIONS.

1 WATERSTOP CONSTRUCTION JOINTS
STD-S-2 SCALE: NTS

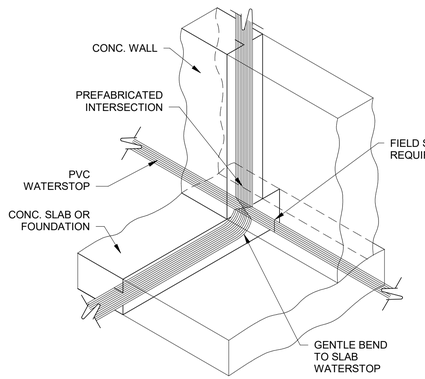

TYP. WATERSTOP AT SLAB AND WALL

2 WATERSTOP AT SLAB & WALL
STD-S-2 SCALE: NTS

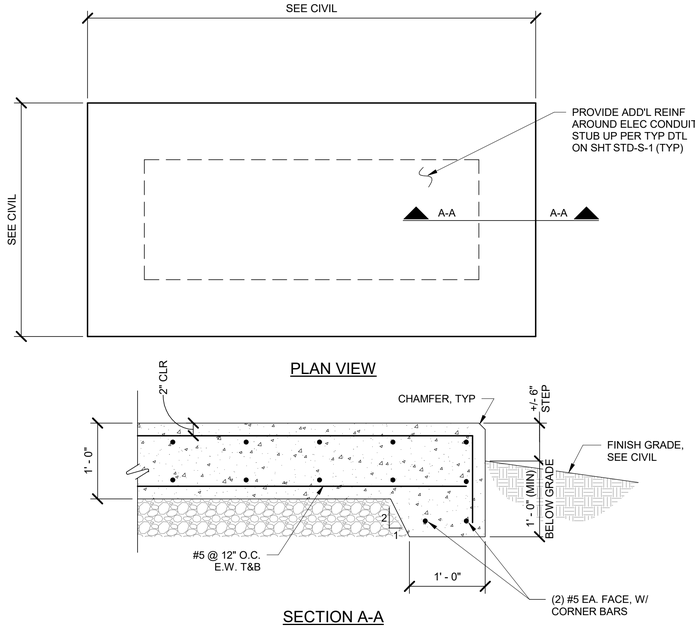

NOTES:
1. SEE CIVIL FOR PAD SIZES, LOCATIONS, ELEVATIONS, AND SLOPE REQUIREMENTS.
2. COORDINATE EQUIPMENT REQUIREMENTS WITH MECHANICAL AND ELECTRICAL.
3. PROVIDE A BROOM FINISH TO TOP CONCRETE SURFACE.
4. THIS DETAIL SHALL NOT BE USED FOR GENERATORS - SEE OTHER DETAIL THIS SHEET.

3 TYPICAL EQUIPMENT PAD DETAIL (NON-GENERATOR)
STD-S-2 SCALE: NTS

NO.	DATE	REVISION	APP.

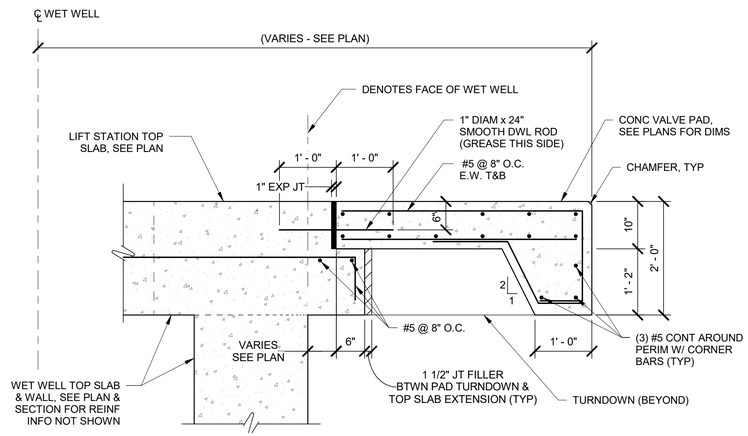

4 TYP NEW VALVE PAD DTL @ NEW WET WELL
STD-S-2 SCALE: NTS

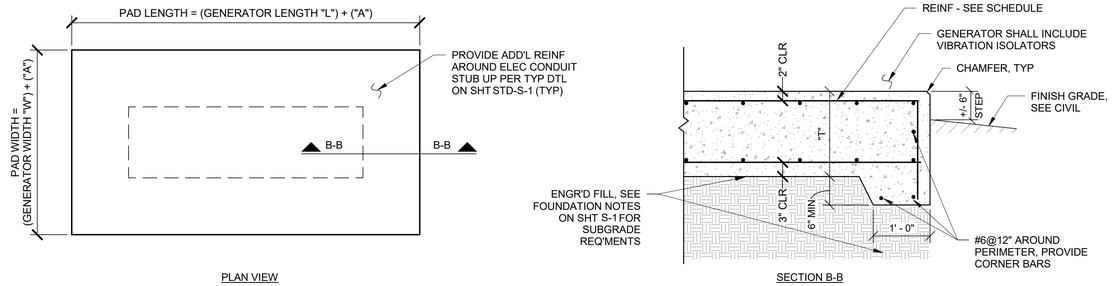

NOTES:
1. SEE CIVIL FOR PAD LOCATION ON SITE.
2. COORDINATE PAD WIDTH AND LENGTH WITH GENERATOR MFR AND CONTRACT DRAWINGS. PROVIDE SCHEDULED CLEARANCE AROUND THE PERIMETER BETWEEN THE OUTSIDE EDGE OF PAD AND OUTERMOST PORTION OF GENERATOR.
3. COORDINATE SIZE AND LOCATION OF REQ'D OPENINGS W/ GENERATOR MFR.
4. PROVIDE A BROOM FINISH TO TOP CONCRETE SURFACE.
5. ANCHOR GENERATOR TO CONC PER MFR RECOMMENDATIONS.
6. COORD DRAIN AND CONC SLOPE REQUIREMENTS

GENERATOR PAD SCHEDULE

SITE LOCATION	"A"	"W"	"L"	"T"	REINFORCEMENT	MODEL	MAX OPERATING WEIGHT
LAKE VILLAGE	2'-8"	3'-4"	11'-4"	1'-6"	#6 @ 10" EW, T&B	-	3,500 LB
-	-	-	-	-	-	-	-
-	-	-	-	-	-	-	-
-	-	-	-	-	-	-	-

5 TYPICAL GENERATOR PAD DETAIL
STD-S-2 SCALE: NTS

RPS
A TETRA TECH COMPANY
Texas PE Firm Reg. #F-929
575 N. Dairy Ashford, Suite 700, Houston, Texas 77079
T +1 281 589 7257
E usinfrastructure@rpsgroup.com

SURVEYED BY: KUO Inc.
FB NO. F-4578

This document is released for the purposes of interim review only under the authority of:

Phillip A. Fleming, P.E.
Texas P.E. No. 131982
2/10/26

It is not to be used for bidding, construction, or permitting purposes.

CITY OF HOUSTON
HOUSTON PUBLIC WORKS

RECONSTRUCTION & REHABILITATION
COH LIFT STATIONS

STRUCTURAL STANDARD DETAILS

STD-S-2

WBS NUMBER	FOR CITY OF HOUSTON USE ONLY
R-000267-0178-3	
DRAWING SCALE	
AS NOTED	
CITY OF HOUSTON PM	
TAHA LOTIA	
SHEET NO. 51 OF 268	

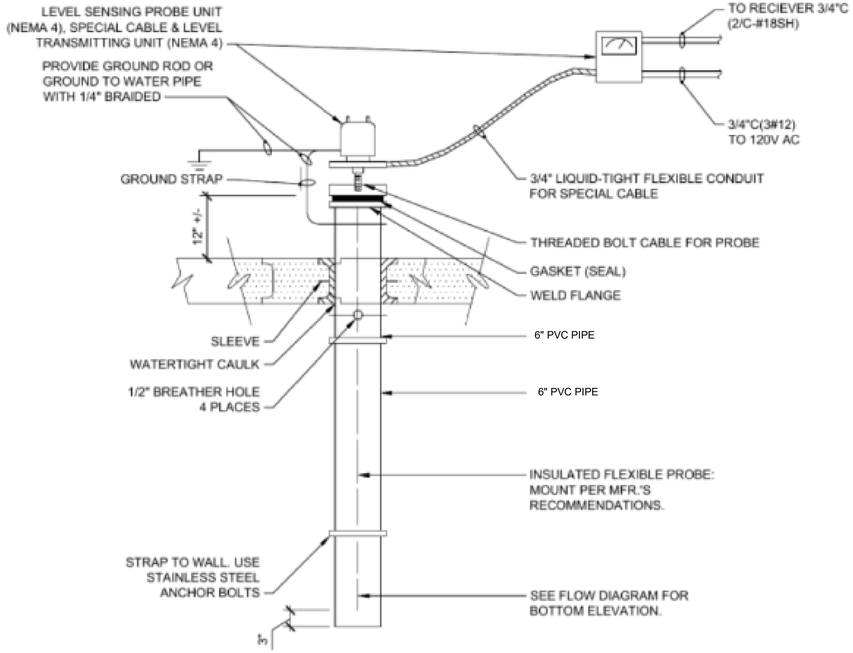

1 LEVEL SENSOR STILLING WELL
NTS

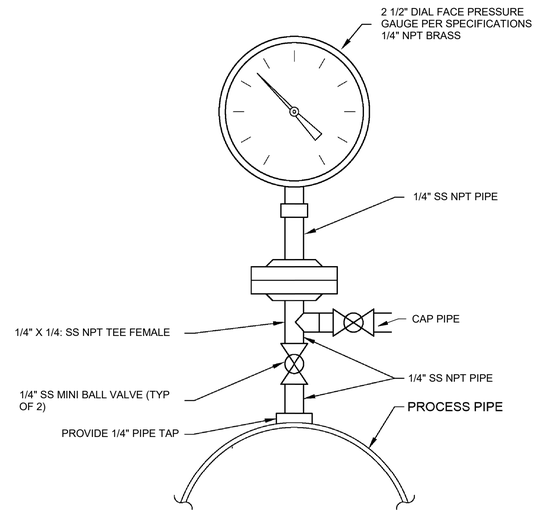

NOTES:
1. USE TYPE 316 SST FITTINGS AND VALVES

2 TYP PRESSURE GAUGE DETAIL
NTS

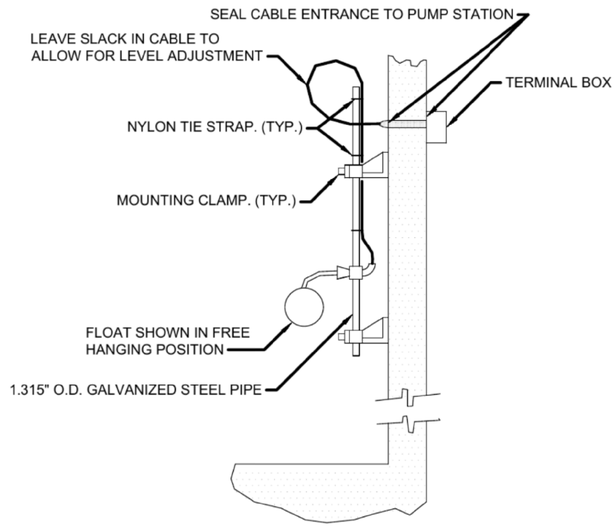

3 CORD TYPE- DOUBLE FLOAT SWITCH
NTS

NO.	DATE	REVISION	APP.

RPS A TETRA TECH COMPANY
Texas PE Firm Reg. #F-929
575 N. Dairy Ashford, Suite 700, Houston, Texas 77079
T +1 281 589 7257
E usinfrastructure@rpsgroup.com

SURVEYED BY:
FB NO.

This document is released for the purposes of interim review only under the authority of:

Jeremy Austin, P.E.
Texas P.E. No. 116816
03/30/2026

It is not to be used for bidding, construction, or permitting purposes.

CITY OF HOUSTON
HOUSTON PUBLIC WORKS

RECONSTRUCTION & REHABILITATION
COH LIFT STATIONS

PROCESS DETAILS SHEET (1 OF 5)
STD-D-1

WBS NUMBER	FOR CITY OF HOUSTON USE ONLY
R-000267-00178-3	
DRAWING SCALE	
AS NOTED	
CITY OF HOUSTON PM	
TAHA LOTIA	
SHEET NO. 52 OF 268	

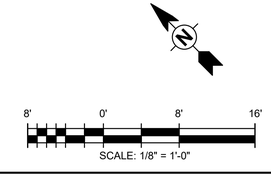

PLOTTED: 3/23/2026 3:44:37 PM
PLOT STYLE:
Autodesk Docs://200-317106-24001 COH LS Rehab Design/D-LIFT STATIONS-200-317106-24001_v25.rvt

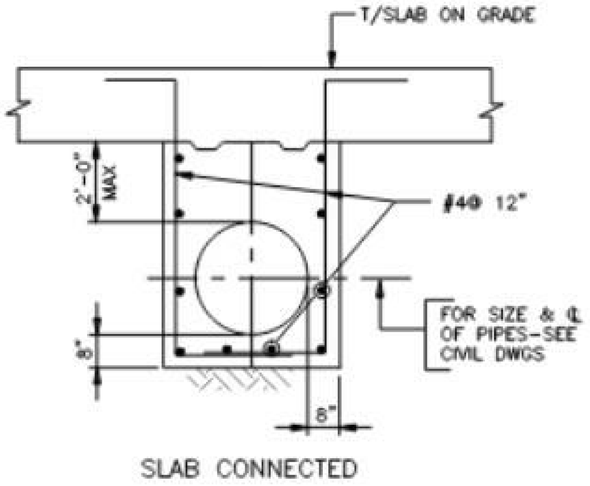

SLAB CONNECTED

1 PIPE ENCASEMENT DETAILS
NTS

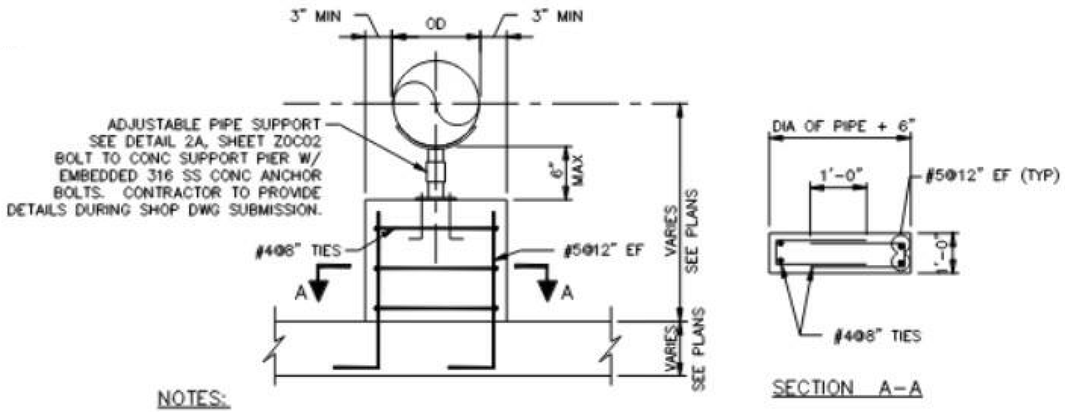

SECTION A-A

NOTES:

1. CONCRETE SUPPORT PIER IS NOT A THRUST BLOCK AND IS NOT INTENDED TO REPLACE THRUST BLOCK PROVIDED AT OTHER LOCATIONS.
2. PLACE SUPPORT PIER APPROX 9" TO 24" FROM CHECK VALVE, SEE CIVIL DRAWINGS. DO NOT PLACE SUPPORT PIER ON TOP OF EXPANSION JOINT.

TYPICAL CONC PIPE SUPPORT PIER DETAIL
2
NTS

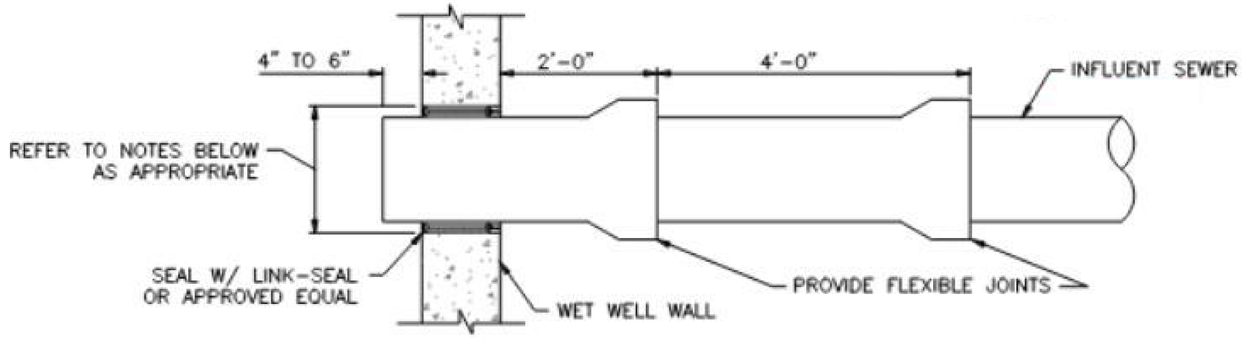

TYP INFLUENT SEWER ENTRY DETAIL
3
NTS

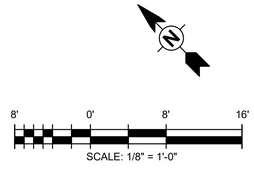

NO.	DATE	REVISION	APP.

RPS A TETRA TECH COMPANY
Texas PE Firm Reg. #F-929
575 N. Dairy Ashford, Suite 700, Houston, Texas 77079
T +1 281 589 7257
E usinfrastructure@rpsgroup.com

SURVEYED BY:
FB NO.

This document is released for the purposes of interim review only under the authority of:

Jeremy Austin, P.E.
Texas P.E. No. 116816
03/30/2026

It is not to be used for bidding, construction, or permitting purposes.

CITY OF HOUSTON
HOUSTON PUBLIC WORKS

RECONSTRUCTION & REHABILITATION
COH LIFT STATIONS

PROCESS DETAILS SHEET (2 OF 5)
STD-D-2

WBS NUMBER	FOR CITY OF HOUSTON USE ONLY
R-000267-00178-3	
DRAWING SCALE	
AS NOTED	
CITY OF HOUSTON PM	
TAHA LOTIA	
SHEET NO. 53 OF 268	

PLOTTED: 3/23/2026 3:44:38 PM
PLOT STYLE:
Autodesk Docs://200-317106-24001 COH LS Rehab Design/D-LIFT STATIONS-200-317106-24001_v25.rvt

PLOTTED: 3/23/2026 3:44:40 PM
PLOT STYLE:
Autodesk Docs://200-317106-24001 COH LS Rehab Design/D-LIFT STATIONS-200-317106-24001_v25.rvt

NO.	DATE	REVISION	APP.

NOTE:
WHEN A SURGE RELIEF VALVE IS USED IN LIFT STATION DESIGN THE DESIGN ENGINEER SHALL PROVIDE AN ANALYSIS IN THE FINAL ENGINEERING DESIGN REPORT FOR JUSTIFICATION OF ITS USE & ITS SIZE.

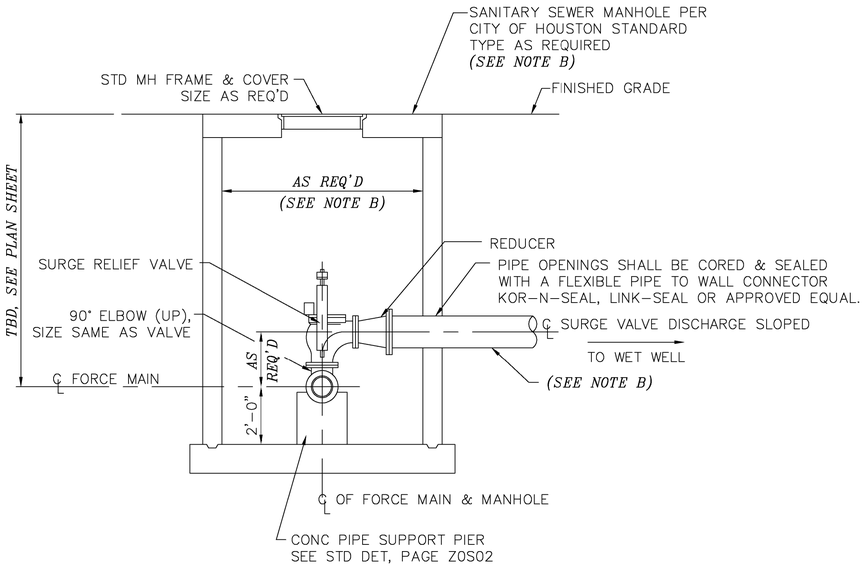

SECTION Z Z0C06

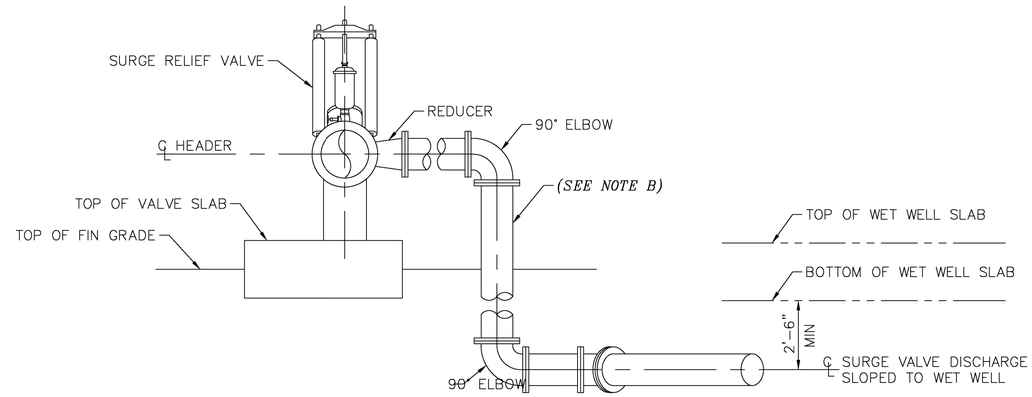

SECTION Y Z0C06

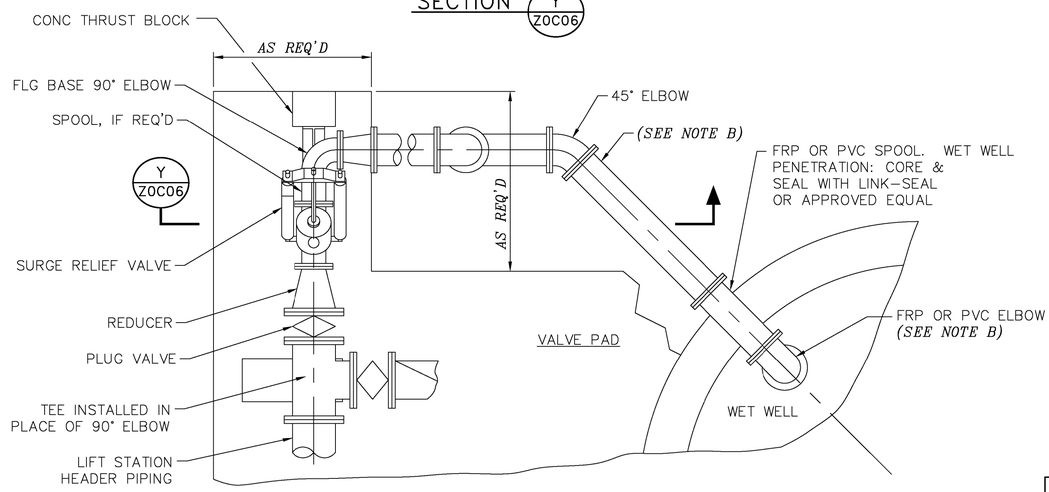

TYP SURGE RELIEF VALVE FOR STATIONS WITHOUT VALVE VAULT

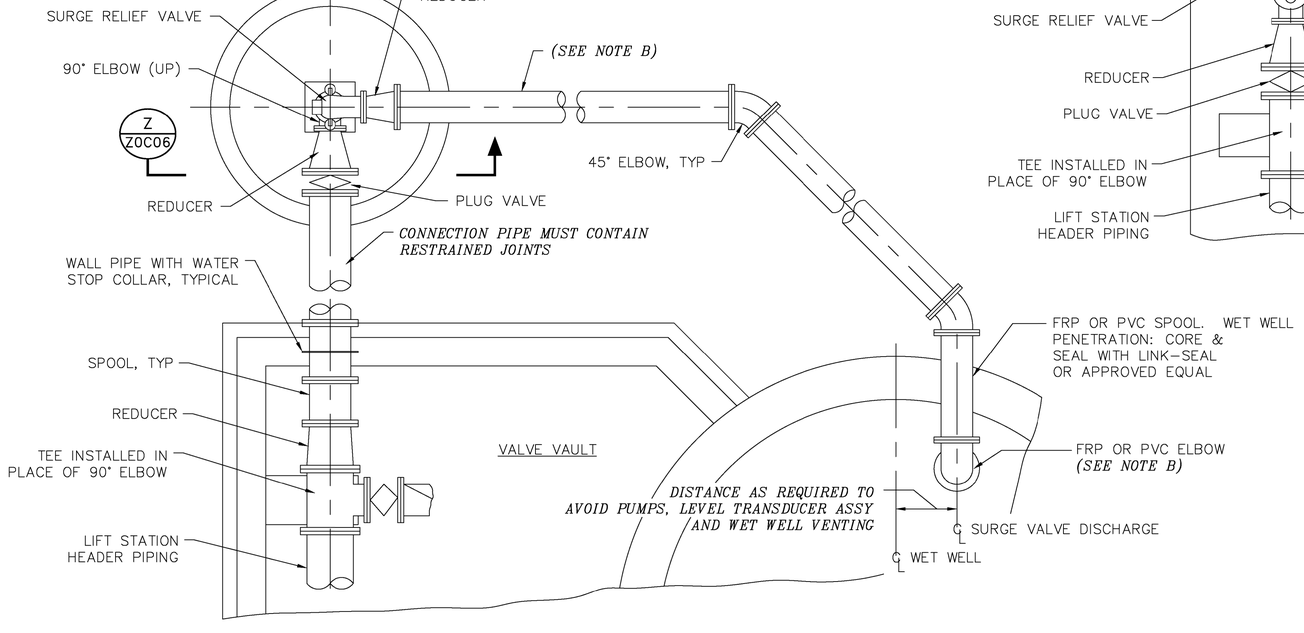

TYP SURGE RELIEF VALVE FOR STATIONS WITH VALVE VAULT

TYP SURGE RELIEF VALVE INSTALLATION DETAILS

(WHEN REQUIRED)

8' 0' 8' 16'
SCALE: 1/8" = 1'-0"

RPS A TETRA TECH COMPANY
Texas PE Firm Reg. #F-929
575 N. Dairy Ashford, Suite 700, Houston, Texas 77079
T +1 281 589 7257
E usinfrastructure@rpsgroup.com

SURVEYED BY:
FB NO.

This document is released for the purposes of interim review only under the authority of:

Jeremy Austin, P.E.
Texas P.E. No. 116816
03/30/2026

It is not to be used for bidding, construction, or permitting purposes.

CITY OF HOUSTON
HOUSTON PUBLIC WORKS

RECONSTRUCTION & REHABILITATION
COH LIFT STATIONS

PROCESS DETAILS SHEET (3 OF 5)
STD-D-3

WBS NUMBER	FOR CITY OF HOUSTON USE ONLY
R-000267-00178-3	
DRAWING SCALE	
AS NOTED	
CITY OF HOUSTON PM	
TAHA LOTIA	
SHEET NO. 54 OF 268	

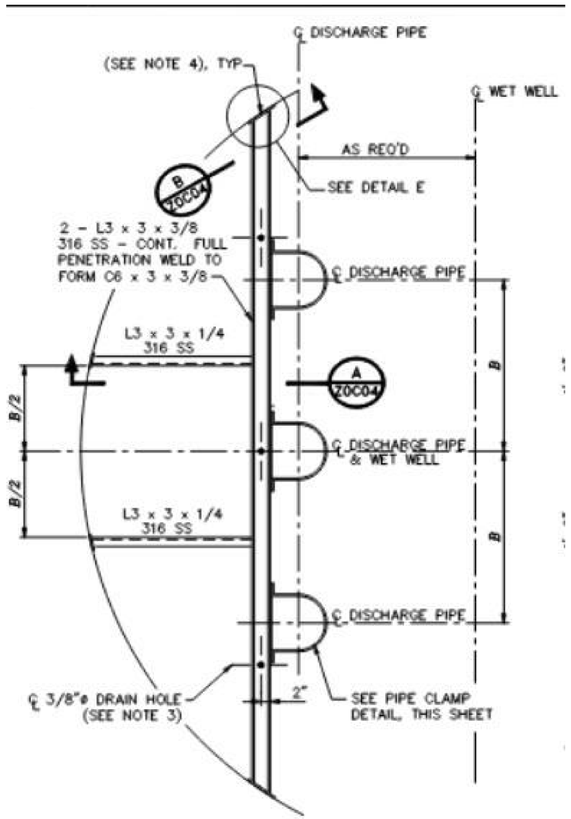

1 TYP DISCHARGE PIPING SUPPORT PLAN FOR 3 PUMPS
NTS

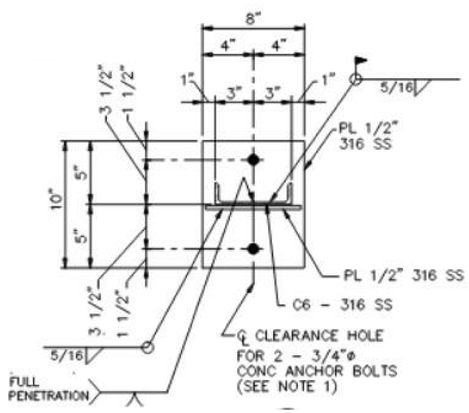

2 SECTION B
NTS

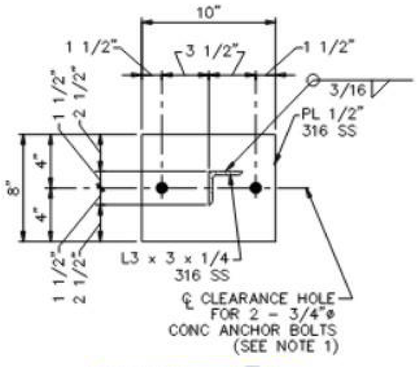

3 SECTION C
NTS

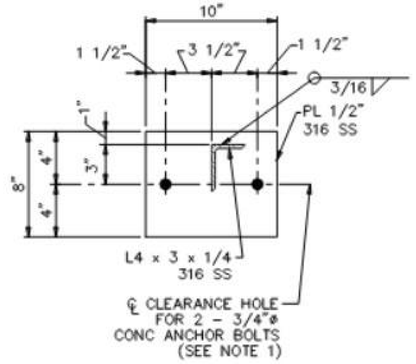

4 SECTION D
NTS

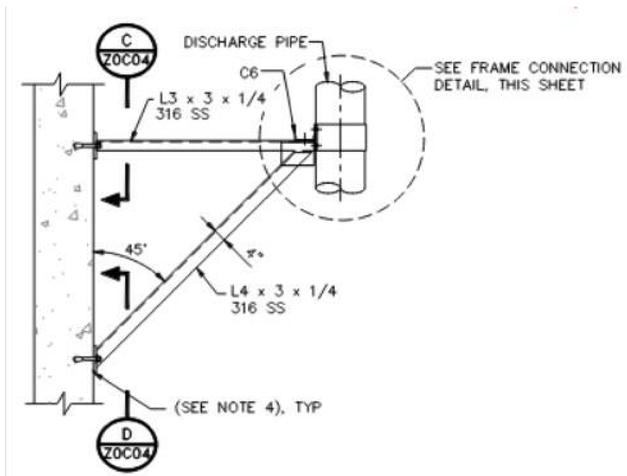

5 TYP LATERAL PIPE SUPPORT FRAME
NTS

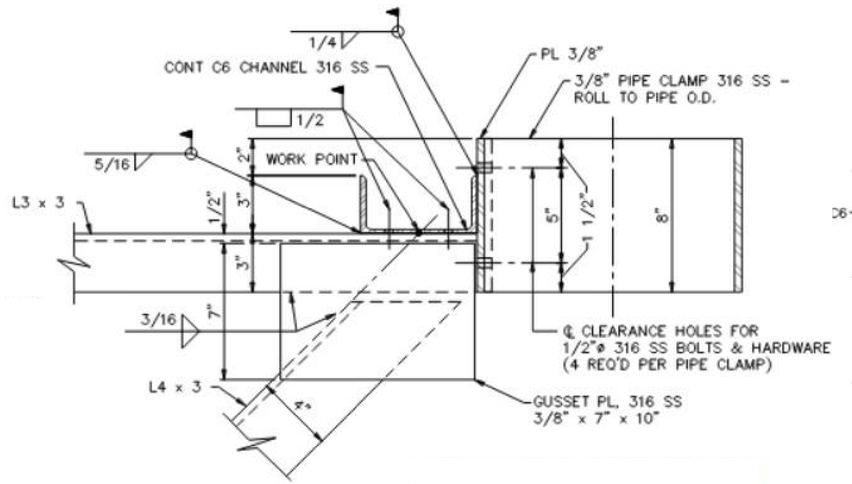

6 FRAME CONNECTION DETAIL
NTS

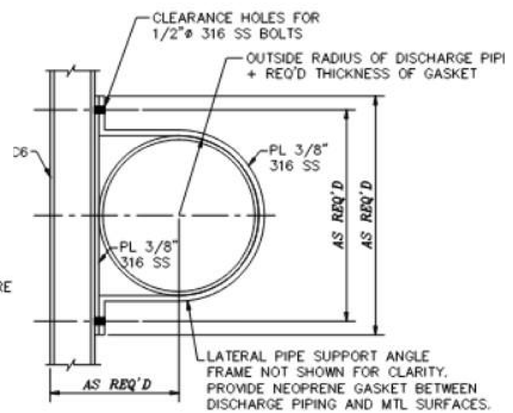

8 PIPE CLAMP DETAIL
NTS

8' 0' 8' 16'
SCALE: 1/8" = 1'-0"

NO.	DATE	REVISION	APP.

RPS A TETRA TECH COMPANY
Texas PE Firm Reg. #F-929
575 N. Dairy Ashford, Suite 700, Houston, Texas 77079
T +1 281 589 7257
E usinfrastructure@rpsgroup.com

SURVEYED BY:
FB NO.

This document is released for the purposes of interim review only under the authority of:

Jeremy Austin, P.E.
Texas P.E. No. 116816
03/30/2026

It is not to be used for bidding, construction, or permitting purposes.

CITY OF HOUSTON
HOUSTON PUBLIC WORKS

RECONSTRUCTION & REHABILITATION
COH LIFT STATIONS

PROCESS DETAILS SHEET (4 OF 5)
STD-D-4

WBS NUMBER	FOR CITY OF HOUSTON USE ONLY
R-000267-00178-3	
DRAWING SCALE	
AS NOTED	
CITY OF HOUSTON PM	
TAHA LOTIA	
SHEET NO. 55 OF 268	

PLOTTED: 3/23/2026 3:44:42 PM
PLOT STYLE:
Autodesk Docs://200-317106-24001 COH LS Rehab Design/D-LIFT STATIONS-200-317106-24001_v25.rvt

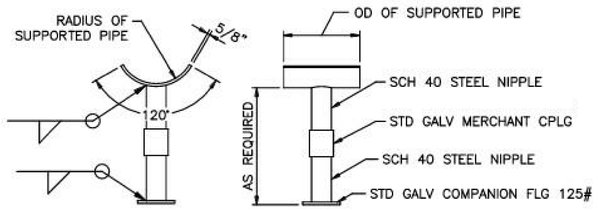

1 TYP ADJUSTABLE PIPE SUPPORT
NTS

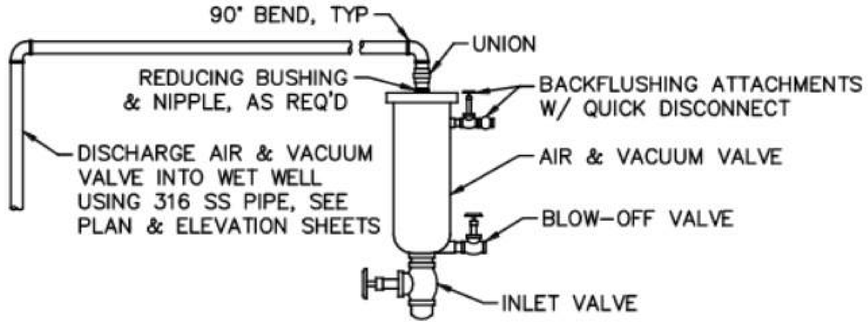

2 TYPICAL AIR & VACUUM VALVE ASSY
NTS

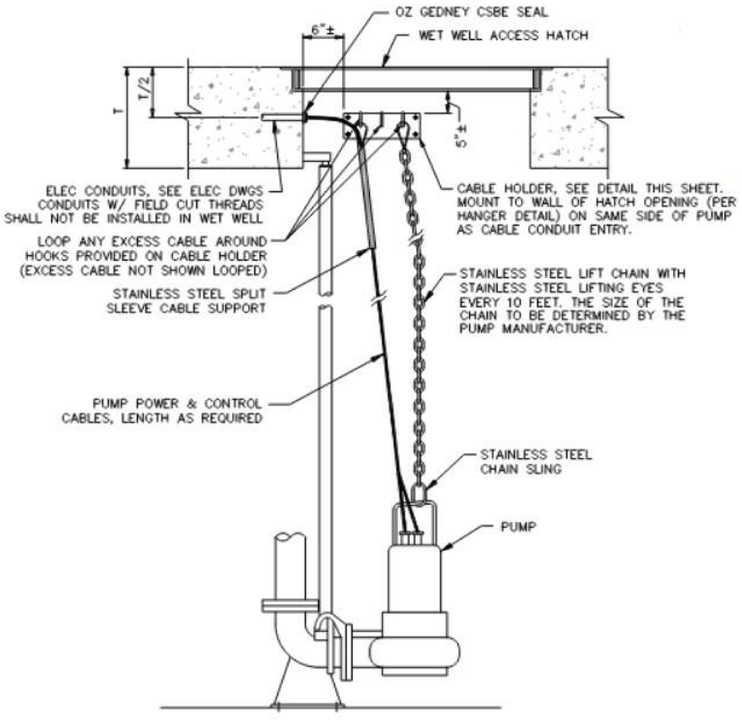

5 TYP PUMP LIFTING & CABLING DETAIL
NTS

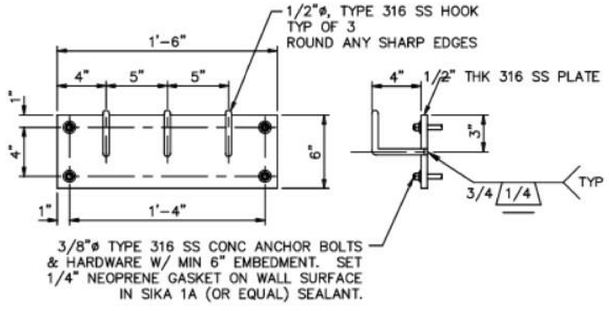

4 TYPICAL CABLE HOLDER ASSY
NTS

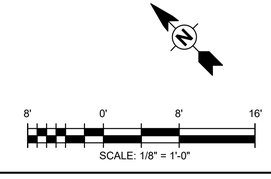

NO.	DATE	REVISION	APP.

RPS
A TETRA TECH COMPANY
Texas PE Firm Reg. #F-929
575 N. Dairy Ashford, Suite 700, Houston, Texas 77079
T +1 281 589 7257
E usinfrastructure@rpsgroup.com

SURVEYED BY:
FB NO.

This document is released for the purposes of interim review only under the authority of:

Jeremy Austin, P.E.
Texas P.E. No. 116816
03/30/2026

It is not to be used for bidding, construction, or permitting purposes.

CITY OF HOUSTON
HOUSTON PUBLIC WORKS

RECONSTRUCTION & REHABILITATION
COH LIFT STATIONS

PROCESS DETAILS SHEET (5 OF 5)
STD-D-5

WBS NUMBER	FOR CITY OF HOUSTON USE ONLY
R-000267-00178-3	
DRAWING SCALE	
AS NOTED	
CITY OF HOUSTON PM	
TAHA LOTIA	
SHEET NO. 56 OF 268	

PLOTTED: 3/23/2026 3:44:43 PM
PLOT STYLE:
Autodesk Docs://200-317106-24001 COH LS Rehab Design/D-LIFT STATIONS-200-317106-24001_v25.rvt

SYMBOLS	DESCRIPTION
52 CS	MEDIUM VOLTAGE DRAWOUT TYPE POWER CIRCUIT BREAKER CS-CONTROL SWITCH
(E.O.) FRAME TRIP	LOW VOLTAGE CIRCUIT BREAKER, 3 POLE UNLESS OTHERWISE NOTED. LSIG IF NOTED MCP IF NOTED ERMS IF NOTED
✳ OR	COMBINATION MOTOR CIRCUIT PROTECTOR AND MAGNETIC MOTOR STARTER, FULL VOLTAGE NON-REVERSING UNLESS OTHERWISE NOTED: ✳ FVR-FULL VOLTAGE REVERSING RVNR-REDUCED VOLTAGE NON-REVERSING 2S1W-TWO SPEED, ONE WINDING 2S2W-TWO SPEED, TWO WINDING
✳ OR	NON-FUSIBLE DISCONNECT SWITCH, 600 VOLT, 3 POLE ✳ AMPERE RATING NOTED IF OTHER THAN 30A
✳ ✱ OR F	FUSIBLE DISCONNECT SWITCH, 600 VOLT, 3 POLE, AMPERE RATING AND FUSE SIZE AS NOTED: ✳ AMPERE RATING NOTED IF OTHER THAN 30A ✱ FUSE RATING
MIS OR I	MOTOR ISOLATION SWITCH, HORSEPOWER RATED
	DRAWOUT TYPE EQUIPMENT OR DEVICE
	MEDIUM VOLTAGE CABLE TERMINATION
	MEDIUM VOLTAGE AIR INTERRUPTER SWITCH
	MEDIUM VOLTAGE FUSED AIR INTERRUPTER SWITCH
	MEDIUM VOLTAGE FUSED MOTOR CONTROLLER
30KVA 480V- 120/208Y K-*	TRANSFORMER, RATINGS AND CONNECTIONS AS NOTED. UNLESS OTHERWISE NOTED ON THE SINGLE LINE DIAGRAMS ALL DRY TYPE TRANSFORMERS SERVICING ADMINISTRATIVE AND LABORATORY SPACES SHALL HAVE A K FACTOR OF 13. ALL OTHER DRY TYPE TRANSFORMERS SHALL HAVE A K-4 RATING. ISOLATION TRANSFORMERS SHALL HAVE A K-20 RATING
✳ A:5	CURRENT TRANSFORMER: ✳ QUANTITY A= PRIMARY AMPERES
✳ PV-SV	POTENTIAL TRANSFORMER: ✳ QUANTITY PV= PRIMARY VOLTAGE SV= SECONDARY VOLTAGE
	GENERATOR, RATINGS AND CONNECTIONS AS NOTED
100A ATS-1 N S	TRANSFER SWITCH AUTOMATIC TRANSFER SWITCH (EG ATS-1) MANUAL TRANSFER SWITCH (EG MTS-1) "N" INDICATES NORMAL SOURCE "S" INDICATES STANDBY SOURCE 100A INDICATES CONTINUOUS CURRENT RATING
✳	VARIABLE SPEED DRIVE CONTROLLER ✳ D.C.= D.C. DRIVE CONTROLLER SCR= SILICON CONTROLLED RECTIFIER VFD= VARIABLE FREQUENCY DRIVE AFD= ADJUSTABLE FREQUENCY DRIVE
	VACUUM CONTACTOR
5KW OR E	UNIT HEATER - ELECTRIC HEATING COIL AND FAN
5KW OR U	UNIT HEATER - STEAM OR WATER HEATING COIL AND FAN
M	MOTOR, NUMERAL INDICATES HORSEPOWER
SPD	SURGE PROTECTION DEVICE
VFD	VARIABLE FREQUENCY DRIVE

SYMBOLS	DESCRIPTION
VM ✳	VOLTMETER (WITH SWITCH IF 3-PHASE)
AM ✳	AMMETER (WITH SWITCH IF 3-PHASE)
*	METER ✳ WM- WATTMETER WHM- WATTHOUR METER WHDM- WATTHOUR DEMAND METER WHDR- WATTHOUR DEMAND RECORDER PF- POWER FACTOR METER RT- RUNNING TIME METER TRANSDUCER AX- CURRENT TRANSDUCER WX- WATT TRANSDUCER
#	RELAY, NO. AS INDICATED 25- SYNCHRONISM CHECK RELAY 27- UNDER VOLTAGE RELAY 38- BEARING PROTECTIVE DEVICE 40- LOSS OF EXCITATION RELAY 42- RUNNING CONTACTOR/PILOT RELAY 46- REVERSE PHASE/PHASE BALANCE/CURRENT RELAY 47- PHASE SEQUENCE VOLTAGE RELAY 49- MACHINE OR TRANSFORMER THERMAL RELAY 50- INSTANTANEOUS OVERCURRENT RELAY 50G- INSTANTANEOUS GROUND 51- TIME OVER CURRENT RELAY 51G- TIME OVERCURRENT RELAY, GROUNDING RESISTOR TYPE 51N- TIME OVERCURRENT RELAY, RESIDUAL TYPE 51V- TIME OVERCURRENT RELAY WITH VOLTAGE RESTRAINT 60- NEGATIVE SEQUENCE VOLTAGE RELAY 62- TIME DELAY RELAY 63- OVER PRESSURE RELAY 67- AC DIRECTIONAL OVERCURRENT RELAY 83- AUTOMATIC SELECTIVE CONTROL OR TRANSFER RELAY 86- LOCKING-OUT RELAY 87- DIFFERENTIAL PROTECTIVE RELAY B- SUFFIX INDICATES "BUS" G- SUFFIX INDICATES "GENERATOR" GF- GROUND FAULT ST- SHUNT TRIP T- SUFFIX INDICATES "TRANSFORMER" X- SUFFIX INDICATES "AUXILIARY"
*	SPECIAL CAPACITOR ✳ SC- SURGE CAPACITOR PF- POWER FACTOR CORRECTION CAPACITOR INCLUDING INDUCTIVE LINK AS NEEDED
	PUSH BUTTON, MOMENTARY CONTACT, SPRING RETURN, NORMALLY CLOSED
	PUSH BUTTON, MOMENTARY CONTACT, SPRING RETURN, NORMALLY OPEN
E-STOP	EMERGENCY STOP PUSH BUTTON WITH RED MUSHROOM HEAD OPERATOR (MAINTAINED CONTACT)
✳ N	STOP PUSH BUTTON WITH RED HEAD OPERATOR (MAINTAINED CONTACT) WITH LOCKABLE OPTION ✳: E-STOP ✳: STOP
STOP START	START-STOP PUSH BUTTON CONTROL STATION (MOMENTARY CONTACT) "L" DENOTES LOCKOUT TYPE
STOP START	START-STOP PUSH BUTTON CONTROL STATION, MAINTAINED CONTACT WITH LOCKOUT DEVICE ON STOP
OFF ON	OFF/ON SELECTOR SWITCH
A B C ✳ (XOO) (OOX)	3 POSITION SELECTOR SWITCH, MAINTAINED CONTACT O-OPEN X-CLOSED

POSITION	TOP CONTACT	MIDDLE CONTACT	BOTTOM CONTACT
A	X	O	O
B	0	0	O
C	0	O	X

✳ NAMEPLATE (A/B/C)
HOA- HAND/OFF/AUTO
HOR- HAND/OFF/REMOTE
LOR- LOCAL/OFF/REMOTE
RSL- RAISE/STOP/LOWER
TOA- TEST/OFF/AUTO

NOTE: 2 POSITION MULTI-CONTACT SWITCH FOLLOWS SAME CONVENTION

M #	MOTOR STARTER COIL, NUMBER AS INDICATED
CR #	CONTROL RELAY COIL, NUMBER AS INDICATED
	RVSS: REDUCED VOLTAGE STATIC SOLID SOFT STARTER

SYMBOLS	DESCRIPTION
*	PILOT LIGHT, COLOR AS NOTED ✳ R- RED G- GREEN B- BLUE W- WHITE A- AMBER
* PTT	PILOT LIGHT, PUSH-TO-TEST TYPE, COLOR AS NOTED ABOVE.
TD	TIME DELAY RELAY RANGE AS NOTED SET POINT AS NOTED TDD-TIME DELAY AFTER DE-ENERGIZATION-OFF DELAY TDE-TIME DELAY AFTER ENERGIZATION-ON DELAY
	NOTC-NORMALLY OPEN, TIMED CLOSING WHEN ENERGIZED
	NCTO-NORMALLY CLOSED, TIMED OPENING WHEN ENERGIZED
	NOTO-NORMALLY OPEN, TIMED OPENING WHEN DE-ENERGIZED
	NCTC-NORMALLY CLOSED, TIMED CLOSING WHEN DE-ENERGIZED
⊗	FIELD INSTRUMENT, TAG NO. OR LOOP # AS INDICATED ✳INDICATES INSTRUMENT TYPE DEFINED ON LOOP SHEETS ## - INDICATES LOOP NO.
OR ⊗	LIQUID LEVEL (FLOAT) SWITCH NORMALLY OPEN, CLOSES ON RISING LEVEL NORMALLY CLOSED, OPENS ON RISING LEVEL NORMALLY OPEN, CLOSES ON DROPPING LEVEL NORMALLY CLOSED, OPENS ON DROPPING LEVEL
OR ⊗	PRESSURE OR VACUUM SWITCH NORMALLY OPEN, CLOSES ON RISING PRESSURE NORMALLY CLOSED, OPENS ON RISING PRESSURE NORMALLY OPEN, CLOSES ON DROPPING PRESSURE NORMALLY CLOSED, OPENS ON DROPPING PRESSURE
OR ⊗	TEMPERATURE SWITCH OR THERMOSTAT NORMALLY OPEN, CLOSES ON RISING TEMPERATURE NORMALLY CLOSED, OPENS ON RISING TEMPERATURE NORMALLY OPEN, CLOSES ON DROPPING TEMPERATURE NORMALLY CLOSED, OPENS ON DROPPING TEMPERATURE
OR ⊗	FLOW SWITCH (AIR, WATER, ETC.) NORMALLY OPEN, CLOSES ON INCREASED FLOW NORMALLY OPEN, CLOSES ON DROPPING FLOW NORMALLY CLOSED, OPENS ON INCREASED FLOW NORMALLY CLOSED, OPENS ON DROPPING FLOW
OR ⊗	POSITION (LIMIT) SWITCH NORMALLY OPEN NORMALLY OPEN - HELD CLOSED NORMALLY CLOSED NORMALLY CLOSED - HELD OPEN
OR ⊗	TORQUE SWITCH NORMALLY CLOSED, OPENS ON HIGH TORQUE
	CONDUCTORS OR CONDUITS CROSSING PATHS BUT NOT CONNECTED
	CONDUCTORS ELECTRICALLY CONNECTED
FAN	SUPPLY/EXHAUST FAN

SYMBOLS	DESCRIPTION
LA SC	LIGHTNING ARRESTER/SURGE CAPACITOR
OR	GROUND ROD GROUND ROD WELL
30A	FUSE, AMPERE RATING AS NOTED
OR HTR	HEATER
	INDUCTOR
TG	TACHOMETER GENERATOR
	CONTACT, NORMALLY OPEN (NO)
	CONTACT, NORMALLY CLOSED (NC)
	OVERLOAD RELAY HEATER
K	KEY INTERLOCK
TB	TERMINAL OR TEST BLOCK
RTD	RESISTANCE TEMPERATURE DETECTOR
VE	VIBRATION DETECTOR
DM	DAMPER MOTOR
ETM OR	ELAPSED TIME METER
MOV	MOTOR OPERATED VALVE
	PUSH BUTTON STATION, REFER TO ELECTRICAL SCHEMATIC FOR NUMBER OF DEVICES.
J	JUNCTION BOX
JP	POWER JUNCTION BOX
JI	4-20mA SIGNAL JUNCTION BOX
JC	CONTROL JUNCTION BOX
PB	PULL BOX
TC	TERMINATION CABINET
	REMOTE DEVICES
5	MOV WITHOUT INTEGRATED DISCONNECT
5	MOV WITH INTEGRATED DISCONNECT
	INDICATES LIMITS OF EQUIPMENT OR WIRING ENCLOSURE
MPR	(MPR) MOTOR PROTECTION RELAY

GENERAL NOTE

THIS IS A STANDARD LEGEND. SOME SYMBOLS MAY NOT APPEAR ON THE DRAWINGS.

NO.	DATE	REVISION	APP.
	MM/DD/YY	BRIEF DESCRIPTION	XXX
	MM/DD/YY	BRIEF DESCRIPTION	XXX
	MM/DD/YY	BRIEF DESCRIPTION	XXX

RPS A TETRA TECH COMPANY
Texas PE Firm Reg. #F-929
575 N. Dairy Ashford, Suite 700, Houston, Texas 77079
T +1 281 589 7257
E usinfrastructure@rpsgroup.com

SURVEYED BY:
FB NO. F-4578

FOR INTERIM REVIEW ONLY NOT INTENDED FOR PERMIT, BIDDING OR CONSTRUCTION PURPOSES.
ENGINEER:
HOSS FOROUZAN
P.E. SERIAL NO.77748
03/30/2026

CITY OF HOUSTON
HOUSTON PUBLIC WORKS

RECONSTRUCTION & REHABILITATION
COH LIFT STATIONS

ELECTRICAL LEGENDS & SYMBOLS-I

WBS NUMBER	FOR CITY OF HOUSTON USE ONLY
R-000267-00178-3	
DRAWING SCALE	
AS NOTED	
CITY OF HOUSTON PM	
TAHA LOTIA	
SHEET NO. 57 OF 268	

STD-E-1

PLOTTED: 3/26/2026 5:47 PM
PLOT STYLE: COH.ctb
FILE PATH: O:\H8109_Lift Station Rehabilitation And Reconstruction (Tetratech)\6 Drawings\Electrical\Working\H8109_G-07.dwg

SYMBOLS	DESCRIPTION
LA-3 / A / b	REFER TO LIGHT FIXTURE SCHEDULE FOR TYPE FIXTURE: "A"- FIXTURE TYPE "b"- CONTROLLED BY SWITCH "b" "LA-3"- CIRCUIT 3 FROM PANEL LA
b / A / LA-3	REFER TO LIGHT FIXTURE SCHEDULE FOR TYPE FIXTURE, NOTATIONS SAME AS ABOVE
A / LA-3 OR LA-3 / A / NS	INDICATES LIGHT FIXTURES WHICH ARE NONSWITCHED, NOTATIONS SAME AS ABOVE "NS" - NONSWITCHED
LA-3 / A / b	WALL MOUNTED LIGHTING FIXTURE, NOTATIONS SAME AS ABOVE
LA-3 / A / b	POLE MOUNTED LIGHTING FIXTURE, NOTATIONS SAME AS ABOVE
A / LA-3	EMERGENCY LIGHTING BATTERY UNIT WITH TWO LAMP HEADS, NOTATIONS SAME AS ABOVE
A	REMOTE EMERGENCY ADJUSTABLE WALL LIGHTING FIXTURE WITH TWO LAMP HEADS, NOTATIONS SAME AS ABOVE
A / LA-3	CEILING MOUNTED EXIT SIGN, NOTATIONS SAME AS ABOVE
A / LA-3	WALL OUTLET EXIT SIGN. ARROW INDICATES DIRECTION OF EGRESS, NOTATIONS SAME AS ABOVE
	CONDUIT, EXPOSED/SURFACE MOUNTED
	CONDUIT OR DUCTBANK, CONCEALED
	CONDUIT, EXPOSED/SURFACE MOUNTED, TURNING UP
	CONDUIT, EXPOSED/SURFACE MOUNTED, TURNING DOWN
	CONDUIT STUBBED OUT AND CAPPED
2(3#3/0+1#2G, 3"C)	DENOTES A QUANTITY OF 2 SETS OF THREE (3) NO.3/0 AWG CONDUCTORS AND 1 NO.AWG GROUND CONDUCTOR EACH INSTALLED IN 3" CONDUIT.
2(2/C#16TS)	DENOTES A QUANTITY OF TWO INSTRUMENT CABLES. EACH CONSISTS OF TWO NO.16 AWG CONDUCTORS TWISTED TOGETHER AND COVERED WITH A METALLIC SHIELD AND AN OVERALL PROTECTIVE JACKET. REFER TO THE SPECIFICATIONS FOR THE EXACT CABLE TO BE PROVIDED.
3(4"C)	DENOTES A QUANTITY OF THREE 4-INCH CONDUITS.
	FLEXIBLE METAL CONDUIT "WHIP" (2#12, #12G, 3/4"C UNLESS OTHERWISE NOTED) FOR RECESSED LIGHTING FIXTURES AND LIQUID TIGHT MOTOR CONNECTIONS
LP#-1,3	HOMERUN, CIRCUITS 1 AND 3 RUN TO PANEL LP-1
$b	SINGLE POLE SWITCH "b"- INDICATES SWITCH LEG SHALL CONTROL LIGHT FIXTURES WITH "b" DESIGNATION
$b^x	MULTI POLE SWITCH "x"- INDICATES NUMBER OF POLE "b"- NOTATIONS SAME AS ABOVE
$b^P	SINGLE POLE SWITCH AND PILOT LIGHT, "b"- NOTATIONS SAME AS ABOVE
$b^D	DIMMER LIGHTING CONTROL SWITCH, "b"- NOTATIONS SAME AS ABOVE
$b^TM	TIME SWITCH, "b"-NOTATIONS SAME AS ABOVE
$^M	MANUAL MOTOR STARTER /DISCONNECT
$^OS	SINGLE POLE SWITCH WITH OCCUPANCY SENSOR
$^DM	SINGLE POLE DIMMER SWITCH
$b^x xx	SWITCH ENCLOSURE "x"- NOTATIONS SAME AS ABOVE "b"- NOTATIONS SAME AS ABOVE "xx"- INDICATES ENCLOSURE TYPE
LC-1	LIGHTING CONTACTOR WITH NUMBER OF POLES AS INDICATED

SYMBOLS	DESCRIPTION
L*-## / OR / L*-##	LIGHTING PANELBOARD (TYPICAL 120V/240V OR 120V/208V)
H*-## / OR / H*-##	DISTRIBUTION PANELBOARD (TYPICAL 277V/480V)
LA-3	DUPLEX RECEPTACLE, 20A, 120V, 2P, 3W GFI- GROUND FAULT INTERRUPTER TYPE WP- WEATHERPROOF "LA-3"- CIRCUIT 3 FROM PANEL LA
	WELDING RECEPTACLE
	20A, 240V, 2P, 3W, RECEPTACLE
	CLASS 1, DIVISION 1, RATED TWIST LOCK RECEPTACLE, VOLTAGE AND AMPERAGE RATING AS NOTED
	SINGLE FACE, SINGLE GANG PEDESTAL WITH 20A, 120V, 2P, 3W DUPLEX RECEPTACLE, FURNISHED AND INSTALLED UNDER DIVISION 16 UNLESS OTHERWISE NOTED. * DENOTES FURNISHED UNDER OTHER DIVISIONS OF THE SPECIFICATIONS BUT INSTALLED UNDER DIVISION 16
D	DOUBLE FACE, SINGLE GANG PEDESTAL WITH 20A, 120V, 2P, 3W DUPLEX RECEPTACLE AND 20A, 240V, 2P, 3W SINGLE RECEPTACLE, FURNISHED AND INSTALLED UNDER DIVISION 16 UNLESS OTHERWISE NOTED. * DENOTES FURNISHED UNDER OTHER DIVISIONS OF THE SPECIFICATIONS BUT INSTALLED UNDER DIVISION 16
	DOUBLE RECEPTACLE, 20A, 120V, 2P, 3W MOUNTED IN BOX CURB FURNISHED UNDER OTHER DIVISIONS OF THE SPECIFICATIONS BUT INSTALLED UNDER DIVISION 16
	SINGLE GANG 20A, 120V, 3P, 3W RECEPTACLE
	QUAD RECEPTACLE
OS	OCCUPANCY SENSOR CAPABLE OF VACANCY
PC	PHOTOCELL
	QUICK CONNECT TERMINALS

SYMBOLS	DESCRIPTION
COMMUNICATIONS SYSTEMS	
	TELEPHONE OUTLET
	DATA OUTLET
P	DATA INPUT/OUTPUT CABLE OUTLET. "P" DENOTES PROCESS COMPUTER SYSTEM
	VOICE/DATA OUTLET
S	PAGING SPEAKER HORN
S	PAGING SPEAKER BI-DIRECTIONAL
S	PAGING SPEAKER, CEILING MOUNTED TYPE
S	PAGING SPEAKER, WALL MOUNTED TYPE
SECURITY SYSTEMS	
SAP	SECURITY ALARM PANEL
DS	SECURITY ALARM DOOR SWITCH
KP	SECURITY ALARM KEY PAD
CR	SECURITY SYSTEM CARD ACCESS READER
WS	SECURITY ALARM WINDOW SWITCH
MD	SECURITY ALARM MOTION DETECTOR
	SECURITY CAMERA CCTV- CLOSED CIRCUIT TV CAMERA PTZ- PAN, TILT, ZOOM CAMERA LENS CONTROLS
GB	GLASS BREAK DETECTOR
ACP	ACCESS CONTROL PANEL
FIRE ALARM SYSTEMS	
FACP	FIRE ALARM CONTROL PANEL
SD	SMOKE DETECTOR : D- DENOTES DUCT SMOKE DETECTOR R- DENOTES FIXED TEMPERATURE RATE-OF-RISE TYPE.
F	FIRE ALARM MANUAL PULL STATION, MOUNT AT 4'-0"
	ALARM HORN, MOUNT AT 7'-6" : F- DENOTES FIRE ALARM
	ALARM STROBE, MOUNT AT 6'-8" : F- DENOTES FIRE ALARM
	ALARM HORN AND STROBE LIGHT COMBINATION, MOUNT AT 6'-8" : F- DENOTES FIRE ALARM

TAGGING		
EQUIPMENT	EQUIPMENT TAG	CONDUIT TAG
MOTOR CONTROL CENTER	MCC-1	MC1-XX
SWITCHBOARD	SWBD-1	SB1-XX
SWITCHGEAR	SWGR-1	SG1-XX
PROGRAMMABLE LOGIC CABINET	PLC-1	PL1-XX
VARIABLE FREQUENCY DRIVE	VFD-1	VF1-P
LOW VOLTAGE TRANSFORMER	TX-LX OR TX-HX	TXLX-P OR TXHX-P
SERVICE TRANSFORMER	TX-1	TX1-P
GENERATOR	GEN-1	GN1-X
LIGHTING/POWER PANELBOARD	LP/PP-XX	XX-XX
AUTOMATIC TRANSFER SWITCH	ATS-1	AT1-XX
TYPICAL TAG FOR CONDUIT FROM THIS EQUIPMENT TO DOWN STREAM LOAD FOR EXAMPLE.		

EXAMPLE LEGEND:

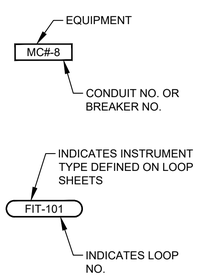

ABBREVIATIONS	
AC	ALTERNATING CURRENT
AFD	ADJUSTABLE FREQUENCY DRIVE
AFF	ABOVE FINISHED FLOOR
AG	ABOVE GRADE
ALUM	ALUMINUM
AMP/A	AMPERE
ATS	AUTOMATIC TRANSFER SWITCH
AUTO	AUTOMATIC
AUX	AUXILIARY
AWG	AMERICAN WIRE GAUGE
C	CONDUIT
CB	CIRCUIT BREAKER
CKT	CIRCUIT
CLF	CURRENT LIMITING FUSE
CP	CONTROL PANEL
CPT	CONTROL POWER TRANSFORMER
CR	CONTROL RELAY
CS	CONTROL SWITCH
CT	CURRENT TRANSFORMER
CU	COPPER
DC	DIRECT CURRENT
DI	DOOR INTERLOCK
DN	DOWN
DWG	DRAWING
EHH	ELECTRICAL HANDHOLE
EC	EMPTY CONDUIT
ELEC	ELECTRICAL
ELEV	ELEVATION
EM	EMERGENCY
EMH	ELECTRICAL MANHOLE
EO	ELECTRICALLY OPERATED
ERMS	ENERGY-REDUCING MAINTENANCE SWITCH
FBO	FURNISHED BY OTHERS
FO	FIBER OPTIC
FRP	FIBERGLASS REINFORCED POLYESTER
FU	FUSE
GCP	GENERATOR CONTROL PANEL
GEN	GENERATOR
G, GRD	GROUND
GFI	GROUND FAULT INTERRUPTER
GFCI	GROUND FAULT CIRCUIT INTERRUPTER
GO	GATE OPERATOR
GRS	GALVANIZED RIGID STEEL
HH	HANDHOLE
HT	HEIGHT
HTP	HEAT TRACE PANEL
HZ	HERTZ
IMH	INSTRUMENT MAN HOLE
INST	INSTRUMENT
LA	LIGHTNING ARRESTER
LC	LIGHTNING CONTACTOR
LCP	LOCAL CONTROL PANEL
LGTS	LIGHTS
LP	LIGHTING PANEL
	CONTINUED ABOVE RIGHT

	CONTINUED BELOW LEFT
LSIG	LONG TIME/SHORT TIME/ INSTANTANEOUS/GROUND FAULT FEATURE INCLUDED
MCC	MOTOR CONTROL CENTER
MCP	MOTOR CIRCUIT PROTECTOR
MFR	MANUFACTURER
MH	MANHOLE
MLO	MAIN LUGS ONLY
MTG	MOUNTING
MTD	MOUNTED
MTS	MANUAL TRANSFER SWITCH
NC	NORMALLY CLOSED
NEC	NATIONAL ELECTRICAL CODE
NO	NORMALLY OPEN OR NUMBER
NTS	NOT TO SCALE
OL	OVERLOAD
OLX	OVERLOAD CONTROL RELAY
PB	PUSH BUTTON OR PULL BOX
PCC	PUMP CONTROL CONSOLE
PPR	PHASE PROTECTIVE RELAY
PPU	PERPETUAL POWER UNIT
PFR	PHASE FAILURE RELAY
PH	PHASE
PNLBD	PANELBOARD
PR	PAIR
PT	POTENTIAL TRANSFORMER
PTT	PUSH TO TEST TYPE
PVC	POLYVINYL CHLORIDE
QTY	QUANTITY
RCP	RELAY CONTROL PANEL
RECP	RECEPTACLES
RVSS	REDUCED VOLTAGE SOFT STARTER
SC	SURGE CAPACITOR
SCH	SCHEMATIC
SCCR	SHORT CIRCUIT CURRENT RATING
SEC	SECONDS OR SECONDARY
SH	SHIELDED OR SHEET
SHT	SHEET
SM	MOTOR RATED SWITCH
SN	SOLID NEUTRAL
SS	STAINLESS STEEL
ST	STARTER
SV	SOLENOID VALVE
SW	SWITCH
SWBD	SWITCHBOARD
SWGR	SWITCHGEAR
TC	TERMINATION CABINET
TEL	TELEPHONE
TO	TIME DELAY ON OPENING
TS	TEMPERATURE SWITCH
TVSS	TRANSIENT VOLTAGE SURGE SUPPRESSOR
TSW	TWISTED SHIELDED WIRE
TYP	TYPICAL
UG	UNDERGROUND
V	VOLTS
VFD	VARIABLE FREQUENCY DRIVE
VO	VALVE OPERATOR
W	WIRE
WP	WEATHERPROOF
XP	EXPLOSION PROOF
XFMR	TRANSFORMER

GENERAL NOTE

THIS IS A STANDARD LEGEND. SOME SYMBOLS MAY NOT APPEAR ON THE DRAWINGS.

NO.	DATE	REVISION	APP.
	MM/DD/YY	BRIEF DESCRIPTION	XXX
	MM/DD/YY	BRIEF DESCRIPTION	XXX
	MM/DD/YY	BRIEF DESCRIPTION	XXX

TPS A TETRA TECH COMPANY
Texas PE Firm Reg. #F-929
575 N. Dairy Ashford, Suite 700, Houston, Texas 77079
T +1 281 589 7257
E usinfrastructure@rpsgroup.com

FOR INTERIM REVIEW ONLY NOT INTENDED FOR PERMIT, BIDDING OR CONSTRUCTION PURPOSES.
ENGINEER:
HOSS FOROUZAN
P.E. SERIAL NO.77748
03/30/2026

SURVEYED BY:
FB NO. F-4578

CITY OF HOUSTON
HOUSTON PUBLIC WORKS

RECONSTRUCTION & REHABILITATION
COH LIFT STATIONS

ELECTRICAL LEGENDS & SYMBOLS-II

WBS NUMBER	FOR CITY OF HOUSTON USE ONLY
R-000267-00178-3	
DRAWING SCALE	
AS NOTED	
CITY OF HOUSTON PM	
TAHA LOTIA	
SHEET NO. 58 OF 268	

STD-E-2

PLOTTED: 3/26/2026 5:47 PM
PLOT STYLE: GAI.ctb
FILE PATH: O:\H8109_Lift Station Rehabilitation And Reconstruction (Tetratech)\6 Drawings\Electrical\Working\H8109_G-08.dwg

LUMINAIRE SCHEDULE

FIXTURE TYPE	VOLTAGE	LAMP TYPE	TOTAL INPUT WATTS	TOTAL OUTPUT LUMENS	MOUNT	DESCRIPTION	MAKE/MODEL
A	120/277V UNIVERSAL DRIVER	LED	42	4000	SUSPENDED	LINEAR LED LUMINAIRE, UV-STABILIZED, INJECTION-MOLDED, IMPACT-RESISTANT, FROSTED POLYCARBONATE HOUSING, -29°C TO 40°C OPERATING TEMPERATURE, 4000K COLOR TEMPERATURE, 80CRI, UV-STABILIZED, INJECTION-MOLDED, IMPACT-RESISTANT CLEAR POLYCARBONATE LENS, UL 1598 WET LOCATION LISTED.	LITHONIA ARCHWAY VAP LED SERIES VAP-4000L-PCL-WD-MVOLT-40K-80CRI-VAPCMB DAY-BRITE CFI VAPORLUME LED V2 V2WPB70L840-4-UNV TBK OR WBK ACESSORY & FKR-126
B	120/277V UNIVERSAL DRIVER	LED	13	---	STEM MOUNT	RED POLYCARBONATE LENS SUITABLE FOR WET LOCATIONS - 120V, SERIES 105 XBR	---
C	120/277V UNIVERSAL DRIVER WITH EMERGENCY BATTERY PACK WITH PHOTO CELL	LED	12	1500	WALL	POWDER COATED DIE-CAST ALUMINUM HOUSING, NATURAL ALUMINUM FINISH, -30°C TO 40°C OPERATING TEMPERATURE, 4000K COLOR TEMPERATURE, 70CRI, GASKETED LENS, IESNA TYPE III DISTRIBUTION, NEMA 4X RATED, WET LOCATION RATED, WITH EMERGENCY BATTERY PACK.	LITHONIA LIGHTING WST LED SERIES WST LED P1 40K VF MVOLT E20WC GARDCO LED WALL SCONCE 101L SERIES 101L-16L-530-NW-G1-3-EBPC-UNV-MGY
D	120/277V UNIVERSAL DRIVER	LED	70	-	POLE MOUNT	HIGH EFFICIENCY LED UNIT WITH UL LISTED FOR WET LOCATION	LITHONIA LIGHTING D-SERIES SIZE 1 DSX1 LED P2 50K T4M MVOLT RPA DDBXD OR EQUAL
E	120/277V UNIVERSAL DRIVER WITH EMERGENCY BATTERY PACK	LED	1.2	536	WALL 8-FT ABOVE FLOOR	LED STANDBY EMERGENCY LUMINAIRE, WHITE ENGINEERING GRADE THERMOPLASTIC HOUSING, 16°C TO 32°C OPERATING TEMPERATURE, IMPACT RESISTANT, CORROSION-PROOF, DAMP LOCATION RATED, EMERGENCY BATTERY PACK INCLUDED.	LITHONIA ELM6 LED SERIES LV-S-W1R-120/277-EL-N-UM-DL
F	MVOLT (120/277 UNIVERSAL DRIVER)	LED	30	-	STANCHION MOUNT	BODY MOUNTING MODULES AND GUARD-COPPER-FREE AL WITH CORRO-FREE EPOXY POWDER COAT. SUITABLE FOR CLASS I, DIVISION I HAZARDOUS LOCATIONS.	CROUSE-HINDS EV LED J4C701
X	120/277V UNIVERSAL DRIVER WITH EMERGENCY BATTERY PACK	LED	18.2	N/A	UNIVERSAL	EMERGENCY EXIT SIGN, CAST-ALUMINUM, NEMA-4X, CLEAR UV-STABLE POLYCARBONATE COVER, SINGLE WHITE POLYCARBONATE, FACEPLATE WITH DIRECTIONAL CHEVRON KNOCKOUTS. WHITE HOUSING, UNIVERSAL MOUNT, SEALED MAINTENANCE-FREE NICKEL CADMIUM BATTERY WITH 90 MINUTE CAPACITY.	LITHONIA LIGHTING LV EL N LED SERIES LV-S-W-2-R-120/277-EL N-UM-4X
TPA	N/A	N/A	N/A	N/A	BASE MOUNTED POLE	ROUND STRAIGHT ALUMINUM POLE, 4" DIAMETER WITH 2-3/8" TENON, 8' POLE WITH LOW PROFILE BASE COVER, HANDHOLE WITH RECESSED COVER. RATED FOR 150 MPH. MATCH TENON TO LUMINAIRE TYPE.	LITHONIA LIGHTING FLORIDA RATED POLE RSALP 8 4C T20 VD DNA
TPB	N/A	N/A	N/A	N/A	BASE MOUNTED POLE	ROUND STRAIGHT ALUMINUM POLE, 5" DIAMETER WITH 2-3/8" TENON, 16' POLE WITH LOW PROFILE BASE COVER, HANDHOLE WITH RECESSED COVER. RATED FOR 150 MPH. MATCH TENON TO LUMINAIRE TYPE.	LITHONIA LIGHTING FLORIDA RATED POLE RSALP 16 5C T20 VD DNA

NO.	DATE	REVISION	APP.
	MM/DD/YY	BRIEF DESCRIPTION	XXX
	MM/DD/YY	BRIEF DESCRIPTION	XXX
	MM/DD/YY	BRIEF DESCRIPTION	XXX

A TETRA TECH COMPANY
Texas PE Firm Reg. #F-929
575 N. Dairy Ashford, Suite 700,
Houston, Texas 77079
T +1 281 589 7257
E usinfrastructure@rpsgroup.com

FOR INTERIM REVIEW ONLY NOT INTENDED FOR PERMIT, BIDDING OR CONSTRUCTION PURPOSES.
ENGINEER:
HOSS FOROUZAN
P.E. SERIAL NO.77748
03/30/2026

SURVEYED BY:
FB NO. F-4578

CITY OF HOUSTON
HOUSTON PUBLIC WORKS

RECONSTRUCTION & REHABILITATION
COH LIFT STATIONS

ELECTRICAL LIGHTING SCHEDULE

WBS NUMBER	FOR CITY OF HOUSTON USE ONLY
R-000267-00178-3	
DRAWING SCALE	
AS NOTED	
CITY OF HOUSTON PM	
TAHA LOTIA	
SHEET NO. 59 OF 268	

STD-E-3

PLOTTED: 3/26/2026 5:47 PM
PLOT STYLE: GAI.ctb
FILE PATH: O:\H8109_Lift Station Rehabilitation And Reconstruction (Tetratech)\6 Drawings\Electrical\Working\H8109_G-09.dwg

ELECTRICAL GENERAL NOTES

1. THE NOTES CONTAINED ON THIS SHEET ARE PROVIDED FOR THE CONVENIENCE OF THE CONTRACTOR WHEN WORKING IN THE FIELD, AND CONTAIN EXCERPTS FROM THE SPECIFICATION SECTIONS. HOWEVER THE CONTRACTOR IS HEREBY ADVISED THAT THE CONTRACT DOCUMENTS CONSIST OF BOTH THE DRAWINGS AND THE SPECIFICATIONS, AND THAT THE CONTRACTOR MUST COMPLY FULLY WITH BOTH THE BOUND DRAWINGS AND THE BOUND SPECIFICATIONS.

2. ALL EQUIPMENT WIRING, RACEWAYS, ETC. SHALL BE INSTALLED AND GROUNDED IN ACCORDANCE WITH THE LATEST EDITION OF THE NATIONAL ELECTRICAL CODE, LOCAL CODES, AND INDUSTRY STANDARDS (IE. UL, NEMA, IEEE, ANSI, ETC.) THE DRAWING NOTES AND DETAILS SHALL BE COMPLIED WITH IN ADDITION TO THE REQUIREMENTS IN THE SPECIFICATIONS. REFER TO EACH SPECIFICATION SECTION FOR SPECIFIC REQUIREMENTS.

3. ALL RACEWAY INSTALLATIONS SHALL BE INSTALLED IN A MANNER TO PREVENT CONFLICTS WITH EQUIPMENT AND STRUCTURAL CONDITIONS. ALL EXPOSED RACEWAY SHALL BE INSTALLED PARALLEL TO BEAMS, CEILINGS, FLOORS AND WALLS. SEE SPECIFICATION ON RACEWAYS FOR ADDITIONAL REQUIREMENTS.

4. CONDUITS SHALL BE TERMINATED IN A NEAT MANNER AND STRICTLY IN ACCORDANCE WITH THE SPECIFICATIONS AND DRAWING DETAILS.

5. CONDUITS TERMINATED INTO ENCLOSURES SHALL BE PERPENDICULAR TO THE WALLS OF THE ENCLOSURE. THE USE OF SHORT SEALTIGHT ELBOW FITTINGS FOR SUCH TERMINATIONS IS NOT PERMITTED.

6. ALL RACEWAY INSTALLATIONS, CROSSING EXPANSION JOINTS OR TRANSITIONS FROM BELOW GRADE TO EXPOSED ABOVE GRADE, SHALL HAVE EXPANSION OR EXPANSION/DEFLECTION TYPE FITTINGS AS SPECIFIED FOR THE APPLICATION. SEE THE DRAWINGS AND THE SPECIFICATION ON RACEWAYS FOR THE EXACT TYPE OF FITTING TO BE USED.

7. NO CONDUIT SMALLER THAN 3/4", NOR WIRE SMALLER THAN NO. 12 AWG, SHALL BE USED UNLESS SPECIFICALLY NOTED.

8. ALL UNDERGROUND SINGLE CONDUITS AND DUCTBANKS OF MULTIPLE CONDUITS SHALL BE RIGID PVC CONDUIT ENCASED IN REINFORCED RED CONCRETE. CONCRETE DYED RED BEFORE PLACEMENT. MINIMUM SIZE IS 2 INCH. FIELD VERIFY THE ROUTING OF ALL EXISTING UNDERGROUND CONDUIT AND DUCTBANKS. COORDINATE ROUTING OF NEW CONDUIT AND DUCTBANKS TO AVOID INTERFERENCE WITH EXISTING CONDUIT, DUCTBANKS, AND OTHER UNDERGROUND UTILITIES.

9. ALL CHANGES OF DIRECTION GREATER THAN 20 DEGREES IN UNDERGROUND SINGLE, OR DUCTBANKS OF MULTIPLE CONDUITS, SHALL BE ACCOMPLISHED USING PVC COATED RIGID ALUMINUM LONG RADIUS BENDS. BENDS OF PVC CONDUIT GREATER THAN 20 DEGREES, OR THE USE OF FLEXIBLE CONDUIT OF ANY TYPE, WILL NOT BE PERMITTED. SEE THE SPECIFICATIONS FOR MORE REQUIREMENTS.

10. LIQUID TIGHT FLEXIBLE ALUMINUM CONDUIT SHALL BE USED FOR THE PRIMARY AND SECONDARY OF TRANSFORMERS, GENERATOR TERMINATIONS AND OTHER EQUIPMENT WHERE VIBRATION IS PRESENT. USE IN OTHER LOCATIONS IS NOT PERMITTED, EXCEPT FOR CONNECTIONS TO INSTRUMENTATION TRANSMITTERS, WHERE MULTIPLE PENETRATIONS ARE REQUIRED. LIQUID TIGHT FLEXIBLE ALUMINUM CONDUIT SHALL HAVE A MAXIMUM LENGTH NOT GREATER THAN THAT OF A FACTORY MANUFACTURED LONG RADIUS ELBOW OF THE CONDUIT SIZE BEING USED. THE MAXIMUM BENDING RADIUS SHALL NOT BE LESS THAN THAT SHOWN IN THE NEC CHAPTER 9, TABLE 2, "OTHER BENDS". BX OR AC TYPE PREFABRICATED CABLES WILL NOT BE PERMITTED.

11. THE WIRING DIAGRAMS, BLOCK DIAGRAMS, QUANTITY/SIZES OF WIRES/CONDUITS REPRESENT A SUGGESTED ARRANGEMENT BASED UPON SELECTED STANDARD COMPONENTS OF ELECTRICAL EQUIPMENT. MODIFICATIONS ACCEPTABLE TO THE ENGINEER MAY BE MADE BY THE CONTRACTOR TO ACCOMMODATE EQUIPMENT ACTUALLY APPROVED. ALL MODIFICATIONS SHALL BE SUBMITTED TO THE ENGINEER FOR APPROVAL. THE BASIC SEQUENCE AND METHOD OF CONTROL MUST BE MAINTAINED AS INDICATED ON THE DRAWINGS AND/OR SPECIFIED.

12. ALL JUNCTION BOXES, PULL BOXES AND TERMINATION BOXES IN NEMA 12 AREAS SHALL BE ALUMINUM. FOR NEMA 4X AREAS SEE SPECIFICATIONS FOR BOX DETAILS AND SPECIFICATIONS.

13. SEAL ALL RACEWAYS ENTERING JUNCTION BOXES OR CONTROL PANELS CONTAINING ELECTRICAL OR INSTRUMENTATION EQUIPMENT WITH WATERTIGHT SEALANT. REFER TO THE SPECIFICATIONS FOR DETAILS.

14. ALL EQUIPMENT AND ELECTRICAL EQUIPMENT ENCLOSURE LOCATIONS, OR TERMINAL BOX LOCATIONS, ARE APPROXIMATE. THE EXACT LOCATIONS SHALL BE COORDINATED WITH AND APPROVED BY THE OWNER/ENGINEER, DURING CONSTRUCTION, AT NO ADDITIONAL COST TO THE OWNER.

15. ALL EQUIPMENT AND ELECTRICAL EQUIPMENT ENCLOSURES DIMENSIONS ARE APPROXIMATE. ALL EQUIPMENT AND ELECTRICAL EQUIPMENT ENCLOSURES OR TERMINAL BOX DIMENSIONS SHALL BE VERIFIED WITH THE EQUIPMENT SUPPLIER. ALLOW FOR LOCATION CHANGES AND INCLUDE IN THE CONTRACT PRICE. THE EXACT LOCATIONS OF ALL ELECTRICAL EQUIPMENT AND ROUTING OF ALL CABLES AND CONDUITS SHALL BE COORDINATED WITH AND APPROVED BY THE OWNER/ENGINEER DURING CONSTRUCTION.

16. CORING OF AN EXISTING STRUCTURE SHALL BE COORDINATED WITH AND APPROVED BY THE OWNER/ENGINEER. CORING THROUGH STRUCTURAL BEAMS IS STRICTLY PROHIBITED WITHOUT PRIOR WRITTEN APPROVAL FROM THE OWNER/ENGINEER.

17. THE LOCATION OF ALL ELECTRICAL EQUIPMENT AND ROUTING OF CABLES AND CONDUITS SHALL BE COORDINATED AND APPROVED BY THE OWNER.

18. THE DUCTBANK ROUTING AS SHOWN ON THE DRAWING IS APPROXIMATE. FIELD VERIFY THE EXACT DUCTBANK ROUTING, CABLE LENGTH AND CONDUIT LENGTH.

19. PROVIDE CONDUIT SEALS FOR CONDUIT PENETRATIONS AS PER NEC AND NFPA820.

20. COORDINATE ALL WORK WITH THE OWNER.

21. LOCATE ALL UNDERGROUND UTILITIES BEFORE DIGGING. COORDINATE THE EFFORT WITH THE OWNER.

22. ALL SLOTTED CHANNEL, SLOTTED CHANNEL SUPPORT MATERIAL, WASHERS, SCREWS, NUTS, CONDUIT CLAMPS, ALL THREAD SPRING NUTS AND MISC. MOUNTING HARDWARE SHALL BE 316 STAINLESS STEEL.

23. LIGHTING FIXTURES SHALL BE MOUNTED ACCORDING TO THE MOUNTING HEIGHT GIVEN ON THE DRAWINGS. THE MOUNTING HEIGHT SHALL BE MEASURED FROM THE BOTTOM OF THE LIGHTING FIXTURE TO THE FINISHED FLOOR.

24. CONDUIT AND WIRE FOR THE HVAC EQUIPMENT AND MISCELLANEOUS DEVICES SHALL BE:

    A. 3/4" (MIN) RIGID ALUMINUM.

    B. NO.14 XHHW CU. WIRE XHHW (MIN.).

    C. IN ACCORDANCE WITH ALL ELECTRICAL AND HVAC SPECIFICATIONS REQUIREMENTS.

25. CONDUITS AND WIRES SHOWN ON THE INTERFACE DIAGRAM SHALL BE INSTALLED BY THE CONTRACTOR. GROUPING OF CONDUIT AND WIRE MAY BE CHANGED, IF APPROVED BY THE ENGINEER AND OWNER.

26. ALL CONDULETS SHALL BE FORM 7 AND SHALL HAVE 316 SS CLAMP COVERS WITH 316 SS CLAMPS AND SCREWS. SCREW DOWN COVERS ARE UNACCEPTABLE. REFER TO THE SPECIFICATIONS FOR MORE INFORMATION.

27. ALL UNDERGROUND GROUNDING CONDUCTORS SHALL BE BARE TIN-PLATED COPPER, ALL GROUND RODS SHALL BE 3/4" BY 10' LONG. ALL EXPOSED COPPER GROUND CABLES SHALL BE GREEN INSULATED CONDUCTORS. PROVIDE XHHW INSULATION.

28. WHERE NOTES ON THE DRAWING INDICATE THAT THE CONTRACTOR SHALL FIELD-VERIFY, THE INTENT IS FOR THE CONTRACTOR TO INVESTIGATE TO THE EXTENT NECESSARY TO PROVIDE THE WORK AND MATERIALS PRIOR TO BIDDING AND INCLUDE ALL COSTS IN THE BID PRICE. THE CONTRACT PRICE SHALL NOT BE INCREASED WHEN THE CONTRACTOR HAS NOT INVESTIGATED PER THE NOTES DIRECTING THAT BE DONE.

29. REFER TO SPECIFICATION SECTION 16110 RACEWAYS BOXES ENCLOSURES AND FITTINGS FOR INSTALLATION REQUIREMENTS.

TYPICAL ENCLOSURE TYPES BY AREA

NON-HAZARDOUS AREAS	BOXES & ENCLOSURES 1	3R	4X	4X*	12	
OUTDOOR; GENERAL AREAS		X	X			
OUTDOOR; CHEMICAL AREAS				X		
INDOOR; CHEMICAL ROOM				X		
INDOOR; CONDITIONED SPACE					X	
INDOOR; NON-CONDITIONED SHOP SPACE					X	
INDOOR; NON-CONDITIONED PROCESS AREA			X			
INDOOR, ADMIN BUILDING	X					
CLASS I, DIVISION 1	REFER TO NEC, NFPA-820, AND CONTRACT CONSTRUCTION SPECIFICATIONS					
CLASS I, DIVISION 2	REFER TO NEC, NFPA-820, AND CONTRACT CONSTRUCTION SPECIFICATIONS					

GENERAL NOTES:

- EQUIPMENT SUCH AS MOTOR CONTROL CENTER, SWITCHGEAR, VFDS, AND OTHER STAND-ALONE MOTOR STARTERS ARE TO BE SPECIFIED UNIQUELY.
- NEMA 1 ENCLOSURES ARE TO BE NEMA 1 GASKETED.
- NEMA 4X* ENCLOSURES ARE TO BE NON-METALLIC (ie PVC) NEMA 4X
- OUTDOOR GENERAL AREAS COULD BE 3R OR 4X DEPENDING ON OWNER PREFERENCE AND WHETHER WTP OR WWTP - REFER TO DRAWINGS.

CONDUIT TYPE	LOCATION
RIGID GALVANIZED CONDUIT	NOT ACCEPTABLE FOR USE ON THIS PROJECT EXCEPT FOR THE UTILITY COMPANY'S CONDUCTORS. ALL UTILITY COMPANY'S DUCTS SHALL BE AS SPECIFIED BY UTILITY COMPANY.
PVC COATED ALUMINUM CONDUIT	ALL EMBEDDED CONDUIT BENDS, UNDERGROUND DUCTBANK OF MORE THAN 20 DEGREES, AND ALL CONDUIT STUB-UPS TO A MINIMUM OF 6" ABOVE FINISHED FLOOR OR GRADE AND IN CHLORINE AND CAUSTIC ROOMS.
LIQUID TIGHT FLEXIBLE ALUMINUM CONDUIT	RACEWAY CONNECTION TO VIBRATING EQUIPMENT ONLY, IN ALL AREAS.
RIGID NON-METALLIC, SCHEDULE 40 PVC CONDUIT	UNDERGROUND ENCASED IN RED DYE REINFORCED CONCRETE. (AS WHERE SPECIFIED)
RIGID NON-METALLIC, SCHEDULE 80 PVC CONDUIT	FOR USE IN CHLORINE AND CAUSTIC ROOMS, AND UNDERGROUND. ENCASED IN RED DYED REINFORCED CONCRETE. (AS WHERE SPECIFIED)
FLEXIBLE ALUMINUM CONDUIT	FIXTURE WHIP CONNECTION TO LIGHTING FIXTURES IN NEMA 12 AREAS (MAXIMUM 3-FT). BX OR AC TYPE PREFABRICATED CABLES ARE NOT PERMITTED.
ALUMINUM RIGID METAL CONDUIT	ALL ABOVE GRADE AREAS, EXCEPT FOR CONCRETE EMBEDDED AND THOSE AREAS ALREADY DESCRIBED IN THIS TABLE
ELECTRIC METALLIC TUBING (EMT) CONDUIT	FOR USE ONLY ON CONCEALED, ABOVE GROUND, INTERIOR ELECTRICAL WIRING IN AIR-CONDITIONED BUILDINGS.

*REFER TO DESIGN GUIDE LINE SPECIFICATIONS.

DEMOLITION NOTES

1. COORDINATE THE DEMOLITION OF ELECTRICAL CONDUIT, WIRE, EQUIPMENT AND DEVICES WITH THE GENERAL DEMOLITION AND SCHEDULE. THE DRAWINGS ARE INTENDED TO CONVEY THE GENERAL NATURE AND SCOPE OF THE DEMOLITION WORK. EVERY ITEM TO BE DEMOLISHED MAY NOT BE SHOWN. FIELD VERIFY, AND INCLUDE ALL DEMOLITION WORK IN THE CONTRACT PRICE.

2. PROVIDE TEMPORARY WIRE AND CONDUIT FOR THE EQUIPMENT WHICH MAY BE AFFECTED BY THE DEMOLITION BUT TO REMAIN IN SERVICE.

3. RELOCATE AND RECONNECT POWER AND CONTROL RACEWAYS AND CONDUCTORS TO EQUIPMENT AFFECTED BY DEMOLITION WORK.

4. ALL CONDUCTORS BEING DEMOLISHED SHALL BE DISCONNECTED AND REMOVED FROM THE LOAD TO THE SOURCE. SURFACE MOUNTED CONDUITS AND MOUNTING HARDWARE SHALL BE REMOVED. UNDERGROUND CONDUITS WHICH ARE NOT BEING REMOVED OR OTHERWISE NOT BEING MADE UNUSABLE SHALL BE CAPPED AND TAGGED AS SPARE, WITH INFORMATION CLEARLY INDICATING THE LOCATION OF THE OTHER END.

5. ALL SURFACES WHERE DEMOLISHED EQUIPMENT OR CONDUIT IS REMOVED SHALL BE CLEANED, PATCHED AND PAINTED TO MATCH THE SURROUNDING SURFACE.

6. CHECK THE FUNCTION OF EACH CONDUCTOR BEFORE REMOVING OR DISCONNECTING.

7. IF A CONDUCTOR WHICH HAS TO STAY IN SERVICE (NOT BEING DEMOLISHED) IS INSTALLED IN A COMMON CONDUIT WITH CONDUCTORS WHICH ARE BEING DEMOLISHED, THE CONTRACTOR SHALL REMOVE ALL CONDUCTORS FROM THE CONDUIT, PROVIDE NEW CONDUCTORS WHICH ARE REPLACEMENTS FOR THE CONDUCTORS THAT ARE TO REMAIN IN SERVICE AND RE-INSTALL THE NEW CONDUCTORS. AFTER THE CONDUCTORS ARE PULLED, MEGGER OR VFL TEST EACH CONDUCTOR. CONNECT BOTH ENDS OF THE NEW CONDUCTORS AND TEST THE SYSTEM FOR PROPER FUNCTION. DO NOT RE-PULL USED CONDUCTORS UNLESS SPECIFIED.

8. WHERE EQUIPMENT IS BEING RE-FED FROM A NEW SOURCE, EXISTING CONDUIT MAY BE REUSED ONLY IF THE CONDUIT AND FITTINGS ARE OF THE TYPE SPECIFIED FOR NEW WORK ON THIS CONTRACT. IF NOT, THE CONDUIT AND CONDUCTORS SHALL BE REPLACED WITH NEW MATERIAL MEETING THE SPECIFICATIONS, AT NO ADDITIONAL COST TO THE OWNER.

9. THE CONTRACTOR SHALL COORDINATE WITH THE OWNER/ENGINEER TO FLAG EXISTING UNDERGROUND CONDUITS BEFORE DIGGING.

10. THE OWNER HAS THE RIGHT OF FIRST REFUSAL TO THE EQUIPMENT BEING REMOVED. THE CONTRACTOR SHALL DELIVER THE EQUIPMENT WHICH THE OWNER WISHES TO KEEP AT A LOCATION DESIGNATED BY THE OWNER. SEE SPECIFICATIONS.

11. DO NOT MAKE ANY MODIFICATIONS TO THE EXISTING ELECTRICAL EQUIPMENT UNTIL THE FOLLOWING HAS BEEN DONE:

    A. THE OWNER/CONTRACTOR SHALL WITNESS AND RECORD THE CONDITION OF THE EXISTING EQUIPMENT, THE CONTRACTOR SHALL NOTE DOWN ANY DEFECTS OR DEFICIENCIES.

    B. THE OWNER SHALL OPERATE THE EQUIPMENT TO DEMONSTRATE THE CURRENT CONDITIONS. THE CONTRACTOR SHALL NOTE DOWN ANY DEFECTS OR DEFICIENCIES.

    C. A WRITTEN AND PHOTOGRAPHIC RECORD OF THE OPERATION AND EXISTING CONDITION SHALL BE KEPT IN A THREE RING BINDER AT THE OWNER/CONTRACTOR TRAILER, IN FORM OF PICTURES AND INFORMATION.

    D. A FORM SHALL BE GENERATED BY THE CONTRACTOR TO RECORD THE OBSERVATIONS. BOTH PARTIES SHALL SIGN ON THE FORM.

    E. REPLACE ALL MATERIAL OR EQUIPMENT DAMAGED DURING THE COURSE OF WORK.

    F. AFTER THE CHANGES ARE MADE, THE EQUIPMENT SHALL BE INSPECTED AND RE-TESTED TO DEMONSTRATE THAT IT FUNCTIONS CORRECTLY.

    G. NO PORTION OF EXISTING CONDUCTORS SHALL BE SPLICED TO NEW CONDUCTORS FOR RE-USE WITHOUT SPECIFIC APPROVAL FROM THE OWNER/ENGINEER ON A CASE-BY-CASE BASIS.

MCC, CONTROL PANELS, PANELBOARDS

THESE NOTES APPLY TO CONTROL PANELS, MCC ETC WHICH HAS TO BE REFURBISHED, MODIFIED, DISCONNECTED & RECONNECTED OR REWORKED. SEE SPECIFICATION SECTION 16060 ELECTRICAL DEMOLITION:

THE CONTRACTOR SHALL NOT MAKE ANY MODIFICATION UNTIL THE FOLLOWING HAS BEEN DONE:

A. THE OWNER/CONTRACTOR SHALL WITNESS THE CONDITION OF THE EXISTING EQUIPMENT, THE CONTRACTOR SHALL NOTE DOWN ANY DEFECTS OR DEFICIENCY.

B. THE OWNER SHALL OPERATE THE EQUIPMENT TO DEMONSTRATE THE CURRENT CONDITIONS. THE CONTRACTOR SHALL NOTE DOWN ANY DEFECTS OR DEFICIENCIES.

C. A RECORD OF THE OPERATION AND EXISTING CONDITION SHALL BE KEPT IN A THREE RING BINDER AT THE OWNER/CONTRACTOR TRAILER, IN FORM OF PICTURES AND INFORMATION.

D. A FORM SHALL BE GENERATED BY THE CONTRACTOR TO RECORD THE OBSERVATIONS. BOTH PARTIES SHALL SIGN ON THE FORM.

E. REPLACE ALL MATERIAL OR EQUIPMENT DAMAGED DURING THE COURSE OF WORK.

F. AFTER THE CHANGES ARE MADE, THE EQUIPMENT SHALL BE INSPECTED AND RE-TESTED TO DEMONSTRATE THAT IT FUNCTIONS CORRECTLY.

NO.	DATE	REVISION	APP.
	MM/DD/YY	BRIEF DESCRIPTION	XXX
	MM/DD/YY	BRIEF DESCRIPTION	XXX
	MM/DD/YY	BRIEF DESCRIPTION	XXX

RPS A TETRA TECH COMPANY
Texas PE Firm Reg. #F-929
575 N. Dairy Ashford, Suite 700, Houston, Texas 77079
T +1 281 589 7257
E usinfrastructure@rpsgroup.com

SURVEYED BY:
FB NO. F-4578

FOR INTERIM REVIEW ONLY NOT INTENDED FOR PERMIT, BIDDING OR CONSTRUCTION PURPOSES.
ENGINEER:
HOSS FOROUZAN
P.E. SERIAL NO.77748
03/30/2026

CITY OF HOUSTON
HOUSTON PUBLIC WORKS

RECONSTRUCTION & REHABILITATION
COH LIFT STATIONS

ELECTRICAL
GENERAL NOTES

WBS NUMBER	FOR CITY OF HOUSTON USE ONLY
R-000267-00178-3	
DRAWING SCALE	
AS NOTED	
CITY OF HOUSTON PM	
TAHA LOTIA	
SHEET NO. 60 OF 268	

STD-E-4

PLOTTED: 3/26/2026 5:47 PM
PLOT STYLE: GAI.ctb
FILE PATH: O:\H8109_Lift Station Rehabilitation And Reconstruction (Tetratech)\6 Drawings\Electrical\Working\H8109_G-10.dwg

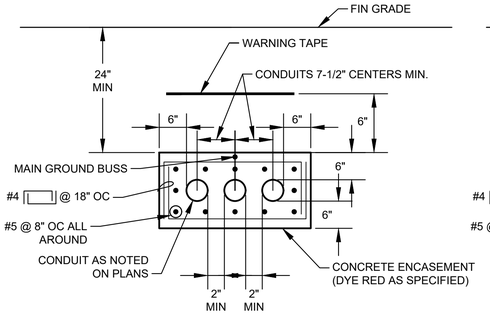

TYP MULTI-CONDUIT DUCTBANK SECTION

NOTE: TIE MAIN GROUNDING BUS TO REBAR AT A MAXIMUM INTERVAL OF EVERY 20 FEET.

DETAIL 1 / NTS / -

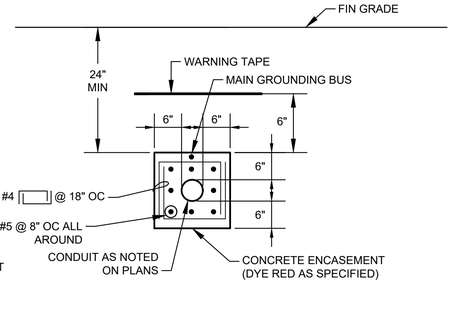

TYP SINGLE-CONDUIT DUCTBANK SECTION

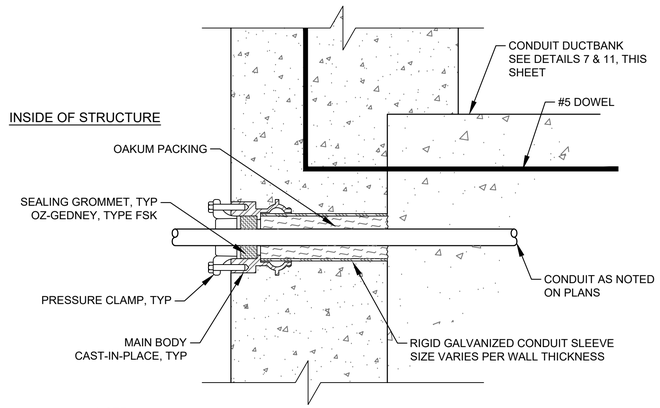

NOTE:

WALL SEAL SHOWN IS TYPICAL FOR EACH CONDUIT IN DUCTBANK.

SINGLE ENDED TYPE

FOR USE WHERE CONDUIT OUTSIDE THE STRUCTURE IS ENCASED IN CONCRETE

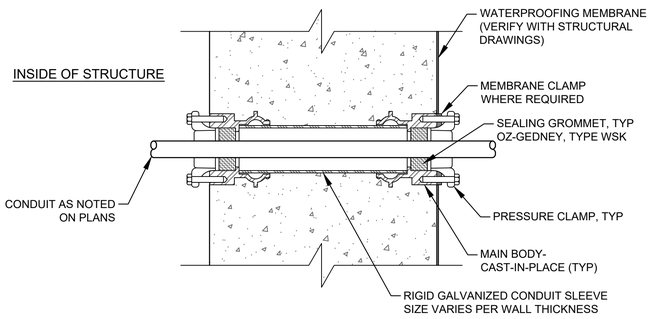

DOUBLE ENDED TYPE WITH MEMBRANE

FOR USE WHERE CONDUIT OUTSIDE THE STRUCTURE IS ENCASED IN CONCRETE

TYPICAL CONDUIT SEALS

DETAIL 4 / NTS / -

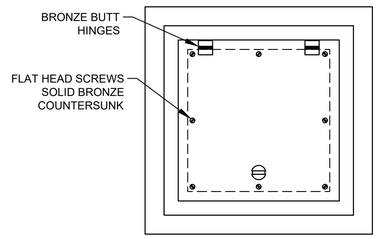

TOP PLAN

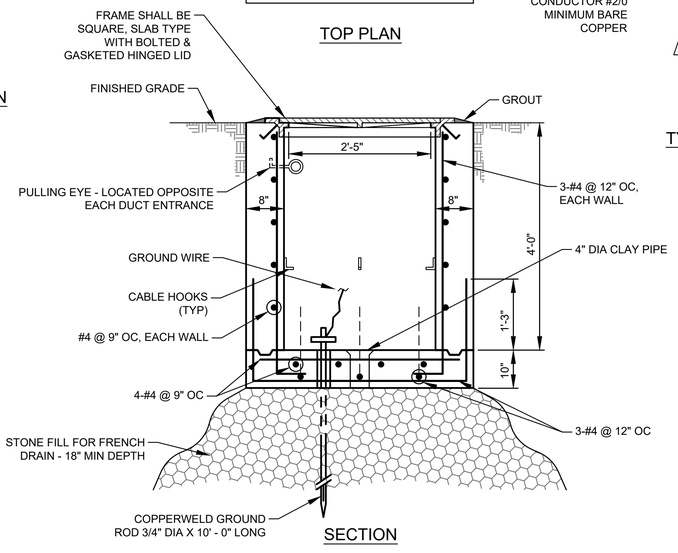

SECTION

TYPICAL ELECTRICAL HANDHOLE CONSTRUCTION

DETAIL 2 / NTS / -

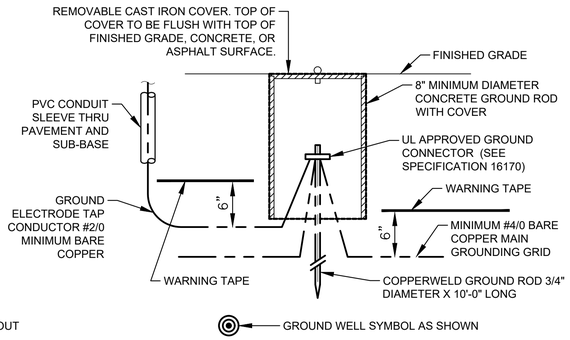

TYPICAL GROUND ROD AND WELL INSTALLATION

DETAIL 3 / NTS / -

GROUND CONNECTOR SCHEDULE	
WIRE SIZE	BURNDY
#2 AWG	GAR 6426
#2/0 AWG	GAR 6426
#4/0 AWG	GAR 6429
500 kcmil	GAR 6434

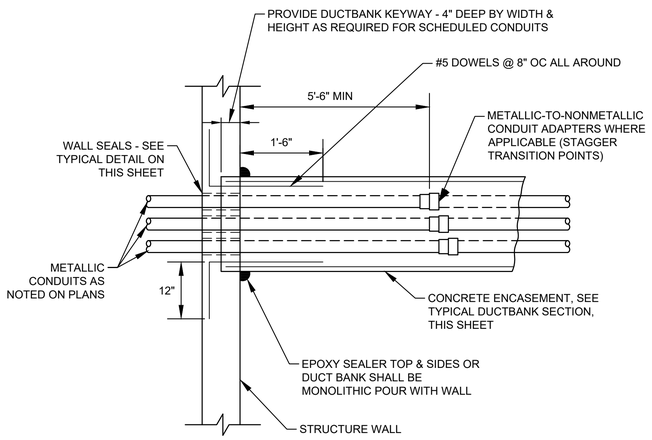

PLAN

TYPICAL DUCTBANK ENTRANCE AT STRUCTURE WALL

DETAIL 5 / NTS / -

NO.	DATE	REVISION	APP.
	MM/DD/YY	BRIEF DESCRIPTION	XXX
	MM/DD/YY	BRIEF DESCRIPTION	XXX
	MM/DD/YY	BRIEF DESCRIPTION	XXX

RPS A TETRA TECH COMPANY
Texas PE Firm Reg. #F-929
575 N. Dairy Ashford, Suite 700, Houston, Texas 77079
T +1 281 589 7257
E usinfrastructure@rpsgroup.com

SURVEYED BY:
FB NO. F-4578

FOR INTERIM REVIEW ONLY NOT INTENDED FOR PERMIT, BIDDING OR CONSTRUCTION PURPOSES.
ENGINEER:
HOSS FOROUZAN
P.E. SERIAL NO.77748
03/30/2026

CITY OF HOUSTON
HOUSTON PUBLIC WORKS

RECONSTRUCTION & REHABILITATION
COH LIFT STATIONS

ELECTRICAL TYPICAL DETAILS–I

WBS NUMBER	FOR CITY OF HOUSTON USE ONLY
R–000267–00178–3	
DRAWING SCALE	
AS NOTED	
CITY OF HOUSTON PM	
TAHA LOTIA	
SHEET NO. 61 OF 268	

STD–E–5

PLOTTED: 3/26/2026 5:47 PM
PLOT STYLE: GAI.ctb
FILE PATH: O:\H8109_Lift Station Rehabilitation And Reconstruction (Tetratech)\6 Drawings\Electrical\Working\H8109_G–11.dwg

PLOTTED: 3/26/2026 5:47 PM
PLOT STYLE: GAI.ctb
FILE PATH: O:\H8109_Lift Station Rehabilitation And Reconstruction (Tetratech)\6 Drawings\Electrical\Working\H8109_G-12.dwg

NO.	DATE	REVISION	APP.
	MM/DD/YY	BRIEF DESCRIPTION	XXX
	MM/DD/YY	BRIEF DESCRIPTION	XXX
	MM/DD/YY	BRIEF DESCRIPTION	XXX

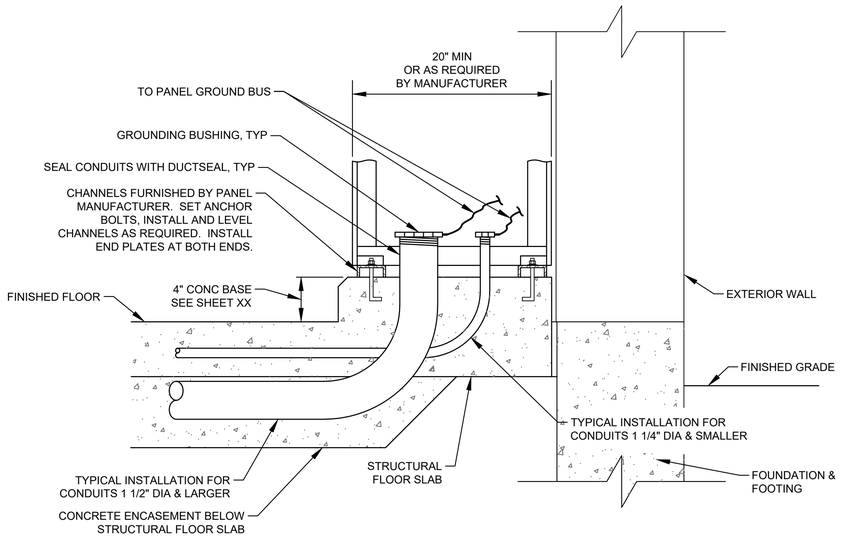

TYPICAL MCC & CONTROL PANEL INSTALLATION & CONDUIT ENTRY

DETAIL 6
NTS -

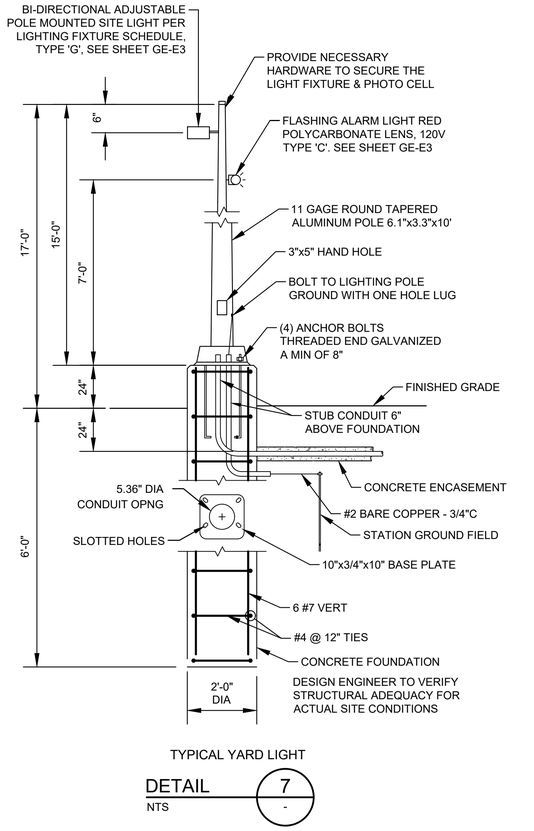

TYPICAL YARD LIGHT

DETAIL 7
NTS -

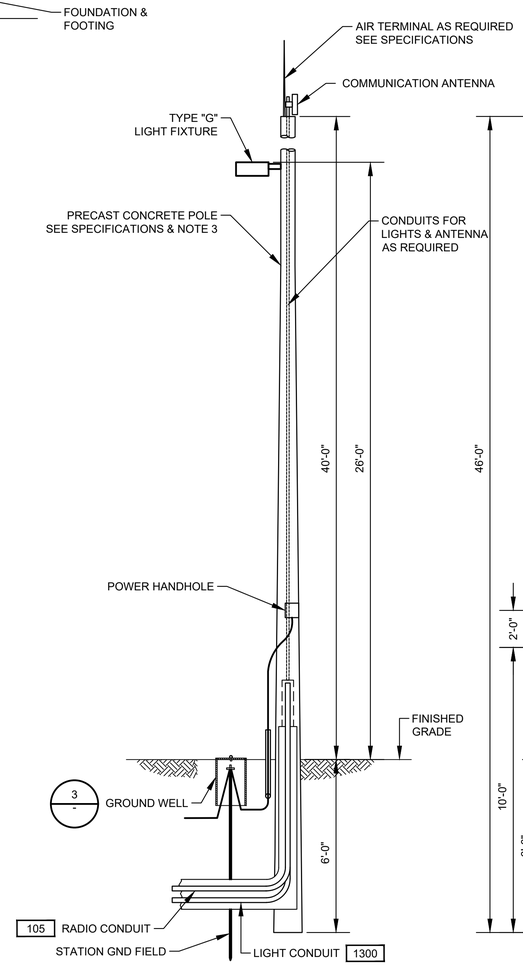

COMMUNICATION POLE MOUNTING DETAIL

DETAIL 8
NTS -

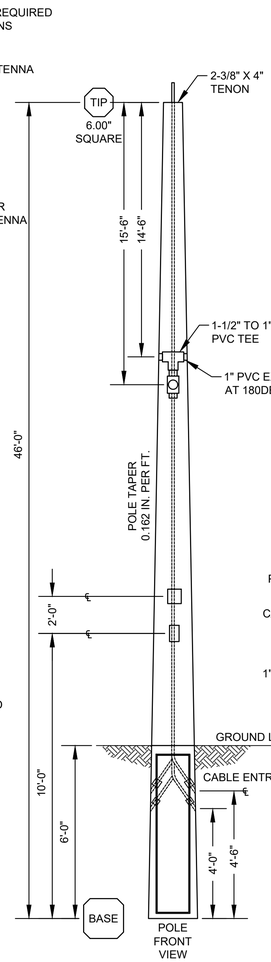

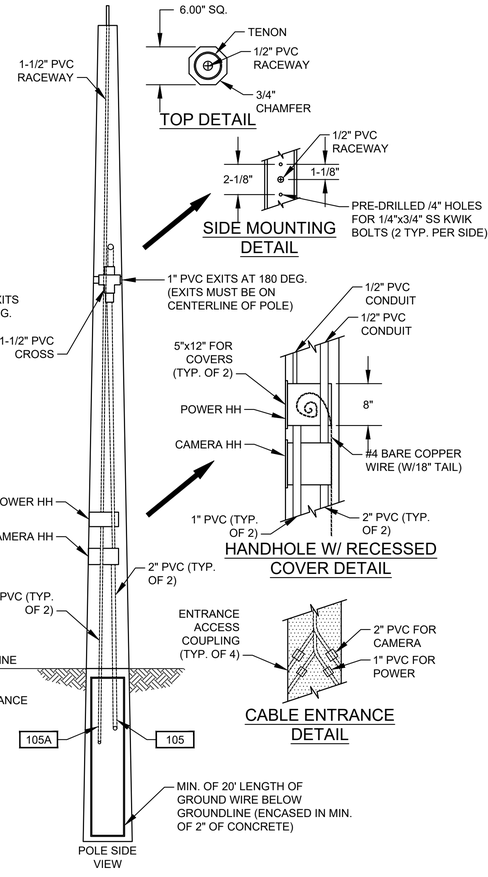

NOTES:

1. ON GROUND WIRE TERMINATION'S, ALL PAINTED OR COATED METAL SURFACES SHALL BE REMOVED AND CLEANED TO BARE METAL. TO OBTAIN A SOUND GROUND CONNECTION. ONCE INSTALLED APPLY PROTECTIVE COATING ON BARE METAL AREAS PER MANUFACTURER REQUIREMENTS.
2. PRECAST CONCRETE POLE TO MOUNT THE RADIO RECEIVER.
3. 1" CONDUIT TO EXTEND TO THE TOP OF POLE FOR ETHERNET CABLE FOR RADIO.

RPS A TETRA TECH COMPANY
Texas PE Firm Reg. #F-929
575 N. Dairy Ashford, Suite 700, Houston, Texas 77079
T +1 281 589 7257
E usinfrastructure@rpsgroup.com

SURVEYED BY:
FB NO. F-4578

FOR INTERIM REVIEW ONLY NOT INTENDED FOR PERMIT, BIDDING OR CONSTRUCTION PURPOSES.
ENGINEER:
HOSS FOROUZAN
P.E. SERIAL NO.77748
03/30/2026

CITY OF HOUSTON
HOUSTON PUBLIC WORKS

RECONSTRUCTION & REHABILITATION
COH LIFT STATIONS

ELECTRICAL – TYPICAL DETAILS–II

WBS NUMBER	FOR CITY OF HOUSTON USE ONLY
R–000267–00178–3	
DRAWING SCALE	
AS NOTED	
CITY OF HOUSTON PM	
TAHA LOTIA	
SHEET NO. 62 OF 268	

STD–E–6

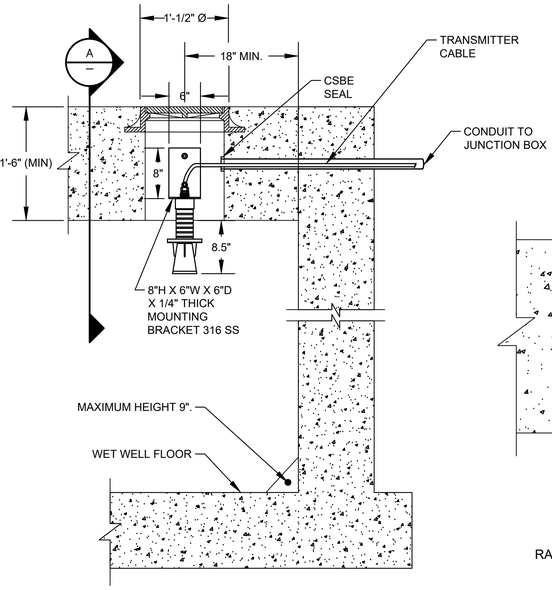

RADAR LEVEL TRANSMITTER MOUNTING
(TYP. LT-1, LT-2)

DETAIL 1
NTS
(SEE NOTE 1, 2, 4 & 5)

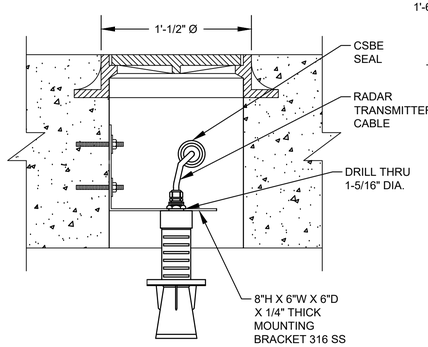

RADAR LEVEL TRANSMITTER MOUNTING
TYP. LT-1 & LT-2

SECTION A
NTS
(SEE NOTE 1, 2, 4 & 5)

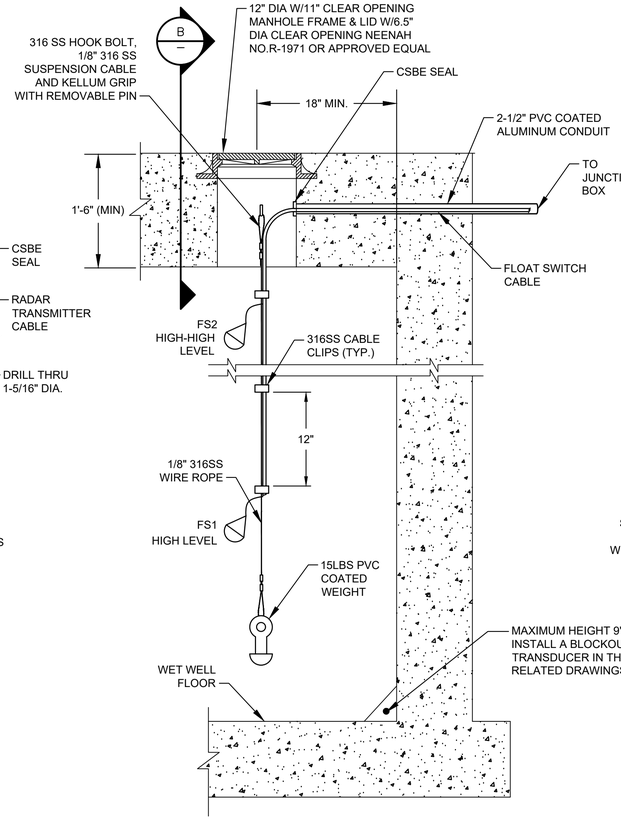

FLOAT SWITCH MOUNTING

DETAIL 2
NTS
(SEE NOTES 3, 4 & 5)

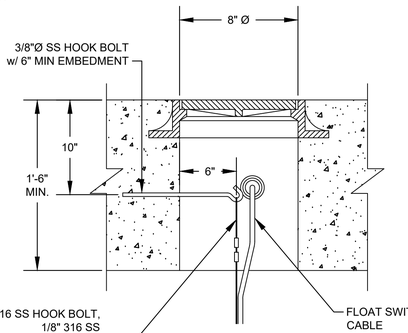

FLOAT SWITCH MOUNTING

SECTION B
NTS
(SEE NOTES 3, 4 & 5)

NOTES:

1. NEW RADAR LEVEL TRANSMITTERS FOR LT-1, LT-2.
2. NEW MANHOLES FOR RADAR LEVEL TRANSMITTERS LT-1, LT-2.
3. NEW MANHOLE FOR FLOAT SWITCHES.
4. PAINT MANHOLE LIDS AND HATCHES HUNTER GREEN.
5. NEW MANHOLE INSTALLATION.
6. RETROFIT MANHOLE INSTALLATION.

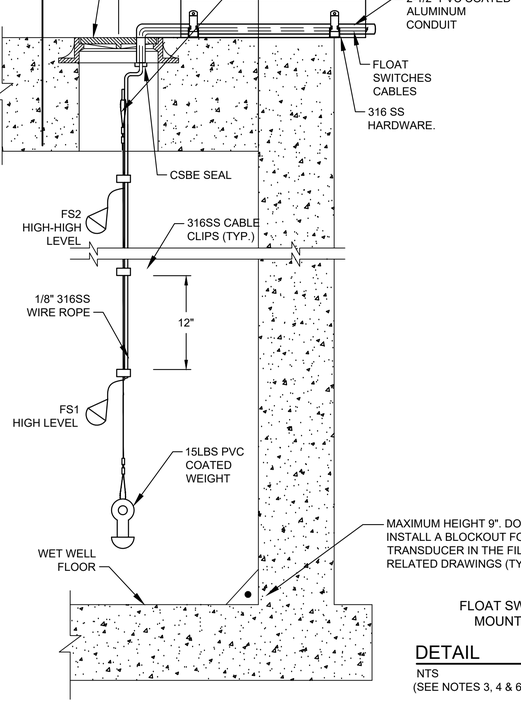

FLOAT SWITCH MOUNTING

DETAIL 3
NTS
(SEE NOTES 3, 4 & 6)

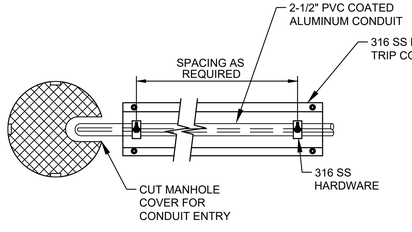

FLOAT SWITCH MOUNTING
TOP VIEW

DETAIL 4
NTS
(SEE NOTES 3, 4 & 6)

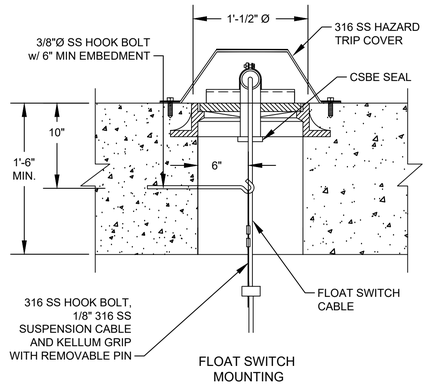

FLOAT SWITCH
MOUNTING

SECTION C
NTS
(SEE NOTES 3, 4 & 6)

NO.	DATE	REVISION	APP.
	MM/DD/YY	BRIEF DESCRIPTION	XXX
	MM/DD/YY	BRIEF DESCRIPTION	XXX
	MM/DD/YY	BRIEF DESCRIPTION	XXX

RPS
A TETRA TECH COMPANY
Texas PE Firm Reg. #F-929
575 N. Dairy Ashford, Suite 700,
Houston, Texas 77079
T +1 281 589 7257
E usinfrastructure@rpsgroup.com

SURVEYED BY:
FB NO. F-4578

FOR INTERIM REVIEW ONLY NOT INTENDED FOR PERMIT, BIDDING OR CONSTRUCTION PURPOSES.
ENGINEER:
HOSS FOROUZAN
P.E. SERIAL NO.77748
03/30/2026

CITY OF HOUSTON
HOUSTON PUBLIC WORKS

RECONSTRUCTION & REHABILITATION
COH LIFT STATIONS

ELECTRICAL – RADAR LEVEL TRANSMITTER GAUGING SYSTEM INSTALLATION & DETAILS–I

WBS NUMBER	FOR CITY OF HOUSTON USE ONLY
R–000267–00178–3	
DRAWING SCALE	
AS NOTED	
CITY OF HOUSTON PM	
TAHA LOTIA	
SHEET NO. 63 OF 268	

STD–E–7

PLOTTED: 3/26/2026 5:47 PM
PLOT STYLE: GAI.ctb
FILE PATH: O:\H8109_Lift Station Rehabilitation And Reconstruction (Tetratech)\6 Drawings\Electrical\Working\H8109_G–13.dwg

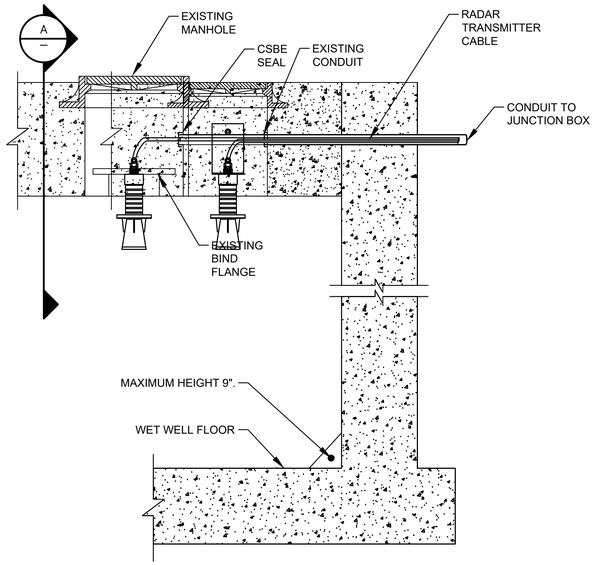

RADAR LEVEL TRANSMITTER MOUNTING
(TYP. LT-1, LT-2)

DETAIL 1
NTS -

(SEE NOTES 1, 2, 4, 6 & 7)

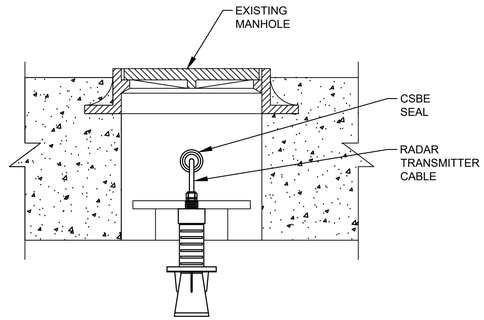

RADAR LEVEL TRANSMITTER MOUNTING
TYP. LT-1 & LT-2

SECTION A
NTS -

(SEE NOTES 1, 2, 4, 6 & 7)

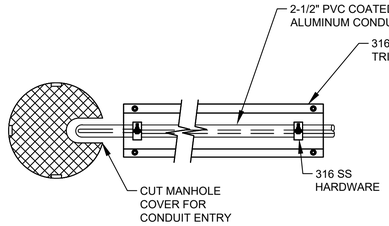

FLOAT SWITCH MOUNTING
TOP VIEW

DETAIL 4
NTS -

(SEE NOTES 1, 4, 5 & 6)

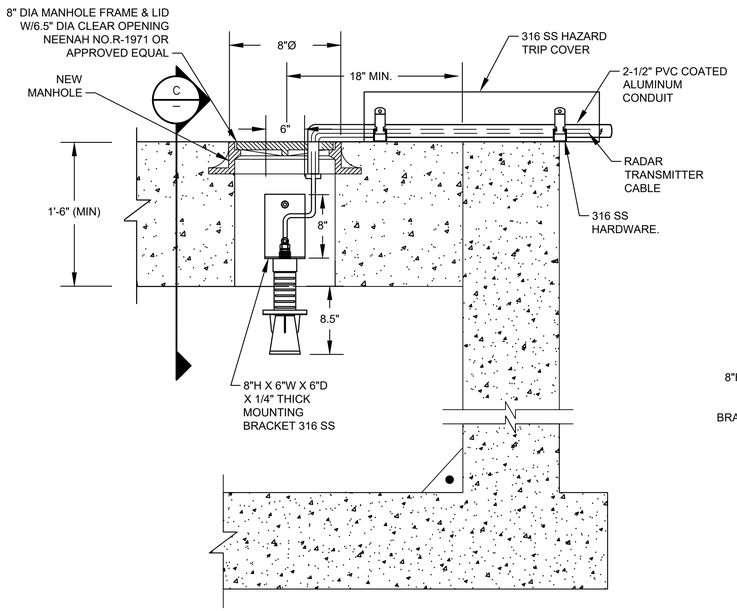

RADAR LEVEL TRANSMITTER MOUNTING
(TYP. LT-1, LT-2)

DETAIL 3
NTS -

(SEE NOTES 1, 4, 5 & 6)

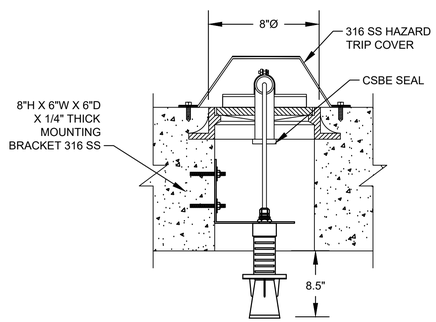

RADAR LEVEL TRANSMITTER MOUNTING
TYP. LT-1 & LT-2

SECTION C
NTS -

(SEE NOTES 1, 4, 5 & 6)

NOTES:

1. NEW RADAR LEVEL TRANSMITTERS FOR LT-1, LT-2.
2. EXISTING AIRCELL MANHOLES FOR RADAR LEVEL TRANSMITTERS LT-1, LT-2.
3. EXISTING SUBMERSIBLE TRANSDUCER MANHOLES FOR RADAR LEVEL TRANSMITTERS LT-1, LT-2.
4. PAINT MANHOLE LIDS AND HATCHES HUNTER GREEN.
5. NEW MANHOLE INSTALLATION.
6. RETROFIT MANHOLE INSTALLATION.
7. DEMOLISH ALL EQUIPMENT ASSOCIATED WITH AIRCELL INSIDE THE WETWELL.

NO.	DATE	REVISION	APP.
1	MM/DD/YY	BRIEF DESCRIPTION	XXX
2	MM/DD/YY	BRIEF DESCRIPTION	XXX
3	MM/DD/YY	BRIEF DESCRIPTION	XXX

RPS A TETRA TECH COMPANY
Texas PE Firm Reg. #F-929
575 N. Dairy Ashford, Suite 700, Houston, Texas 77079
T +1 281 589 7257
E usinfrastructure@rpsgroup.com

FOR INTERIM REVIEW ONLY NOT INTENDED FOR PERMIT, BIDDING OR CONSTRUCTION PURPOSES.
ENGINEER:
HOSS FOROUZAN
P.E. SERIAL NO.77748
03/30/2026

SURVEYED BY:
FB NO. F-4578

CITY OF HOUSTON
HOUSTON PUBLIC WORKS

RECONSTRUCTION & REHABILITATION
COH LIFT STATIONS

ELECTRICAL – RADAR LEVEL TRANSMITTER GAUGING SYSTEM INSTALLATION & DETAILS–II

WBS NUMBER	FOR CITY OF HOUSTON USE ONLY
R–000267–00178–3	
DRAWING SCALE	
AS NOTED	
CITY OF HOUSTON PM	
TAHA LOTIA	
SHEET NO. 64 OF 268	

STD–E–8

PLOTTED: 3/26/2026 5:47 PM

PLOT STYLE: GAI.ctb

FILE PATH: O:\H8109_Lift Station Rehabilitation And Reconstruction (Tetratech)\6 Drawings\Electrical\Working\H8109_G–14.dwg

PLOTTED: 3/26/2026 5:47 PM
PLOT STYLE: GAI.ctb
FILE PATH: O:\H8109_Lift Station Rehabilitation And Reconstruction (Tetratech)\6 Drawings\Electrical\Working\H8109_G-15.dwg

PRIMARY FLOW ELEMENTS

	MAGNETIC FLOW METER
	ULTRASONIC DOPPLER FLOW METER
	ULTRASONIC TIME TRANSIT FLOW METER
	VORTEX FLOW METER
	VENTURI TUBE
	TURBINE OR PROPELLER TYPE METER
	ROTAMETER
	PITOT TUBE
	WEIR FLOW METER
	PARSHALL FLUME OR TRAPEZOIDAL FLUME
	ORIFICE PLATE
	THERMAL MASS FLOWMETER

PRIMARY LEVEL ELEMENTS

	ULTRASONIC LEVEL TRANSDUCER
	RADAR LEVEL TRANSDUCER
	PRIMARY ELEMENT PRESSURE PROBE LEVEL TRANSMITTER
	BUBBLER LEVEL TUBE ELEMENT
	CONDUCTIVE LEVEL PROBE
	FLOAT SWITCH

VALVES

	VALVE - OTHER IN-LINE TYPE NOT OTHERWISE IDENTIFIED
	THREE-WAY VALVE
	BALL VALVE
	GLOBE VALVE
	PINCH VALVE
	GATE VALVE
	NEEDLE VALVE
	DIAPHRAGM VALVE
	BUTTERFLY VALVE
	CHECK VALVE WITH FLOW DIRECTION
	PLUG VALVE
	PRESSURE-REDUCING REGULATOR INTERNAL PRESSURE TAP
	BACK PRESSURE REGULATOR INTERNAL PRESSURE TAP
	PRESSURE-REDUCING REGULATOR EXTERNAL PRESSURE TAP
	BACK PRESSURE REGULATOR EXTERNAL PRESSURE TAP

VALVES

S	SOLENOID ACTUATED VALVE
	"X" / AIR CYLINDER (P) / OIL CYLINDER (O) / HYDRAULIC CYLINDER (H) / ELECTRIC MOTOR (E) / SOLENOID VALVE (S)
OR NO SYMBOL	MANUAL VALVE

MISC PROCESS SYMBOLS

	ANNULAR TYPE SEAL
	CHEMICAL INJECTION POINT
	STRAINER
	DRAIN
	NORMAL OPERATING LEVEL
UV	UV CHAMBER
	FLOW STRAIGHTENER
	LOAD CELL
	SPRAY NOZZLE
	BLIND FLANGE
	FLANGE
	DIAPHRAGM SEAL
	PRESSURE RELIEF (OUT)
	VACUUM RELIEF (IN)

GATES

	SLUICE/SLIDE GATE
	FLOW CONTROL GATE

MOTORS

M	VARIABLE SPEED MOTOR
M	CONSTANT SPEED MOTOR

PUMPS, BLOWERS AND MISC EQUIPMENT

	CENTRIFUGAL BLOWER
	CENTRIFUGAL PUMP
	DIAPHRAGM PUMP AND MOTOR
	PROGRESSIVE CAVITY PUMP
	SUBMERSIBLE PUMP
	POSITIVE DISPLACEMENT BLOWER

PUMPS, BLOWERS AND MISC EQUIPMENT

	MIXER/FLOCCULATOR/AERATOR
	VERTICAL PUMP-1 USED WHEN DISCHARGE LINE IS IN WETWELL
	VERTICAL PUMP-2 USED WHEN DISCHARGE LINE IS EXPOSED.
	VERTICAL PUMP SHAFT USED WHEN INTAKE OF PUMP IS ENCASED.
	SUBMERSIBLE MIXER
	COMPRESSOR
	HEAT EXCHANGER
	FEED PUMP
	GRINDER/MACERATOR
	METERING PUMP
	PLUNGER PUMP
	PERISTALTIC METERING PUMP
	CENTRIFUGE
	PULSATION DAMPENER
	TURBO BLOWER

PUMPS, BLOWERS AND MISC EQUIPMENT

	ROTARY SCREEN

CONTROL ENCLOSURE, INSTRUMENTS AND SCADA

XXX / P AAA YY / BBB CCC D / ZZZ	DIGITAL/ANALOG INSTRUMENT AAA — ISA TAG (REFER TO TABLE) BBB — LOOP NUMBER CCC — LOOP NUMBER SUB D — DIVISION NUMBER P — POWER REQUIREMENT XXX — DESCRIPTION (USED ON PANEL INSTRUMENTS) YY — CHEMICAL ZZZ — LOCATION DIGITAL/ANALOG INSTRUMENT -LOCATED IN THE FIELD -NOT INSIDE OF PANEL -VISIBLE AT FIELD LOCATION -NORMALLY OPERATOR ACCESSIBLE
XXX / P AAA YY / BBB CCC D / ZZZ	DIGITAL/ANALOG INSTRUMENT -LOCATED ON PANEL -VISIBLE TO OPERATOR -NORMALLY OPERATOR ACCESSIBLE
XXX / P AAA YY / BBB CCC D / ZZZ	DIGITAL/ANALOG INSTRUMENT -LOCATED INSIDE PANEL -NOT VISIBLE TO OPERATOR -NORMALLY NOT ACCESSIBLE
XXX / AAA / BBB CCC	DISPLAY (INDICATION/CONTROLLER) AAA — ISA TAG (REFER TO TABLE) BBB — LOOP NUMBER CCC — LOOP NUMBER SUB XXX — DESCRIPTION DISPLAY (INDICATION/CONTROLLER) -LOCATED IN THE FIELD -NOT INSIDE OF PANEL -VISIBLE AT FIELD LOCATION -NORMALLY OPERATOR ACCESSIBLE
XXX / AAA / BBB CCC	DISPLAY (INDICATION/CONTROLLER) -LOCATED ON PANEL -VISIBLE TO OPERATOR -NORMALLY OPERATOR ACCESSIBLE
XXX / AAA / BBB CCC	DISPLAY (INDICATION/CONTROLLER) -LOCATED INSIDE PANEL -NOT VISIBLE TO OPERATOR -NORMALLY NOT ACCESSIBLE
-	INTERLOCKING RELAY

CONTROL ENCLOSURE AND SCADA

	DIGITAL INPUT
	DIGITAL OUTPUT
	ANALOG INPUT
	ANALOG OUTPUT
	SURGE SUPPRESSOR
	OPTO ISOLATOR
/	SIGNAL CONVERTER/ ISOLATOR */* - (INPUT/OUTPUT) * DEFINED AS FOLLOWS: E - VOLTAGE I - CURRENT P - PNEUMATIC PD - PULSE DURATION H - HYDRAULIC O - ELECTROMAGNETIC, SONIC R - RESISTANCE (ELECTRIC)

CONTROL ENCLOSURE, INSTRUMENTS AND SCADA

F(X)

PLC/RTU LOGIC

FUNCTION SYMBOLS AND ABBREVIATIONS

K	PROPORTIONAL GAIN OR ATTENUATE (INPUT:OUTPUT)
- K	REVERSE PROPORTIONAL GAIN OR ATTENUATE (INPUT:OUTPUT)
Σ	SUMMING
Σ/n	AVERAGING
Δ	SUBTRACTING
√	EXTRACT SQUARE ROOT
÷	DIVIDE
X	MULTIPLY
S	INTEGRATE
+	BIAS POSITIVE
-	BIAS NEGATIVE
F(x)	NONLINEAR OR UNSPECIFIED FUNCTION
>	HIGH SELECT
<	LOW SELECT
⊦	HIGH LIMIT
⊥	LOW LIMIT

INSTRUMENT (COMMON HOUSING)	INSTRUMENT (SEPERATOR HOUSING)	INSTRUMENT (PART OF MAJOR EQUIPMENT)

GENERAL NOTES:

1. THIS IS A GENERAL LEGEND SHEET, SOME SYMBOLS AND ABBREVIATIONS MAY NOT APPLY TO THIS SPECIFIC PROJECT.
2. THIS LEGEND APPLIES TO INSTRUMENTATION DIAGRAMS ONLY AND MAY DIFFER FROM LEGENDS FOR OTHER SHEETS.
3. IN GENERAL THIS LEGEND SHEET AND THE INSTRUMENTATION DIAGRAMS ARE BASED ON INTERNATIONAL SOCIETY OF AUTOMATION, STANDARDS FOR PRACTICES FOR INSTRUMENTATION, STANDARD S5.1 SOME MODIFICATIONS, ADDITIONS AND ALTERATIONS HAVE BEEN MADE AS REQUIRED TO ACCOMMODATE THE PROJECT REQUIREMENTS.
4. SOME PROCESS ITEMS, SUCH AS EQUIPMENT ISOLATION VALVES, BYPASS LINES, ETC., WHICH ARE NOT CRITICAL FOR AN UNDERSTANDING OF THE INSTRUMENTATION AND CONTROL FUNCTIONS ARE NOT SHOWN ON THE INSTRUMENTATION SHEETS.
5. SEE ELECTRICAL SHEETS AND SPECIFICATIONS FOR ADDITIONAL CONTROL AND INTERLOCK REQUIREMENTS FOR EQUIPMENT NOT SHOWN OR NOT PROVIDED BY THE INSTRUMENTATION SUPPLIER.
6. IN THE EVENT OF DISCREPANCY BETWEEN THE PROCESS & INSTRUMENTATION DIAGRAMS AND THE LOOP DIAGRAMS, THE INFORMATION FROM THE LOOP DIAGRAMS SHALL BE USED.

HAND SWITCH ABBREVIATIONS:

HOA	HAND/OFF/AUTO
HOR	HAND/OFF/REMOTE
LOC	LOCAL/OFF/COMPUTER
LOR	LOCAL/OFF/REMOTE
LOS	LOCKOUT STOP
OSC	OPEN/STOP/CLOSE
RSL	RAISE/STOP/LOWER
L/C	LOCAL/COMPUTER
L/R	LOCAL/REMOTE
O/C	OPEN/CLOSE
S/S	START/STOP
A/M	AUTO/MANUAL
H/C	HAND/COMPUTER
PB	PUSHBUTTON

GENERAL NOTE

THIS IS A STANDARD LEGEND. SOME SYMBOLS MAY NOT APPEAR ON THE DRAWINGS.

NO.	DATE	REVISION	APP.
	MM/DD/YY	BRIEF DESCRIPTION	XXX
	MM/DD/YY	BRIEF DESCRIPTION	XXX
	MM/DD/YY	BRIEF DESCRIPTION	XXX

RPS
A TETRA TECH COMPANY
Texas PE Firm Reg. #F-929
575 N. Dairy Ashford, Suite 700, Houston, Texas 77079
T +1 281 589 7257
E usinfrastructure@rpsgroup.com

SURVEYED BY:
FB NO. F-4578

FOR INTERIM REVIEW ONLY NOT INTENDED FOR PERMIT, BIDDING OR CONSTRUCTION PURPOSES.
ENGINEER:
HOSS FOROUZAN
P.E. SERIAL NO.77748
03/30/2026

CITY OF HOUSTON
HOUSTON PUBLIC WORKS

RECONSTRUCTION & REHABILITATION
COH LIFT STATIONS

INSTRUMENTATION LEGENDS & SYMBOLS-I

WBS NUMBER	FOR CITY OF HOUSTON USE ONLY
R-000267-00178-3	
DRAWING SCALE	
AS NOTED	
CITY OF HOUSTON PM	
TAHA LOTIA	
SHEET NO. 65 OF 268	

STD-E-9

PLOTTED: 3/26/2026 5:47 PM
PLOT STYLE: GAI.ctb
FILE PATH: O:\H8109_Lift Station Rehabilitation And Reconstruction (Tetratech)\6 Drawings\Electrical\Working\H8109_G-16.dwg

NO.	DATE	REVISION	APP.
	MM/DD/YY	BRIEF DESCRIPTION	XXX
	MM/DD/YY	BRIEF DESCRIPTION	XXX
	MM/DD/YY	BRIEF DESCRIPTION	XXX

LINE SYMBOLS

	MAJOR PROCESS LINE
	MINOR PROCESS LINE
	FUTURE PROCESS LINE
	EXISTING PROCESS LINE
	HARDWIRED SIGNAL
	SOFT LINK
L L	HYDRAULIC LINK
// //	PNEUMATIC LINK
x x	CAPILLARY TUBE OR FILLED SYSTEM SIGNAL
	ELECTROMAGNET OR SONIC SIGNAL (GUIDED)
DESCRIPTION X SHEET# Y	(USED WHEN REFERRING TO A SHEET IN THE DESIGN SET) DESCRIPTION - WHERE FLOW IS GOING SHEET# - WHAT SHEET PROCESS CONTINUES ON X - USED WHEN TWO OR MORE ARROWS ARE REFERING TO THE SAME SHEET. Y - USED WHEN TWO OR MORE ARROWS ARE REFERRING TO THE SAME SHEET.
DESCRIPTION	(USED WHEN REFERRING TO A SHEET NOT IN THE DESIGN SET) DESCRIPTION - WHERE FLOW IS GOING
CAT5e CAT5e	CAT-5e ETHERNET CABLE
CAT6 CAT6	CAT-6 ETHERNET CABLE
- -	MODBUS PLUS CABLE
--	RS-485 CABLE
RS-232 RS-232	RS-232 CABLE
POE POE	POWER OVER ETHERNET CABLE
T1 T1	T1 FIBER CONNECTION
FO FO	NON-SPECIFIC FIBER OPTIC CABLE
100 100	FIBER 100BASE-FX
1000 1000	FIBER 1000BASE-FX
	SIGNAL CROSSING
	PROCESS LINE CROSSING
	PROCESS LINE/ HARDWIRE SIGNAL CROSSING

EQUIPMENT/LOOP TAGGING

X	EQUIPMENT TAG USED TO IDENTIFY NON-INSTRUMENT EQUIPMENT
X	LOOP TAG USED TO TIE THE PROCESS FLOW DIAGRAM TO A LOOP DIAGRAM

STANDARD VALVE AND PIPING USAGE

PDIT 1	BLOCK/BLEED VALVE ARRANGEMENT
PI 1	INSTRUMENTS WITH VALVE ONLY
PI 1	INSTRUMENTS WITH DIAPHRAGM SEAL
PI 1	INSTRUMENTS WITH ANNULAR SEAL

PANEL DETAIL SYMBOLS

RUN	INDICATING LIGHT -R RED (ACTIVE EQUIPMENT) -G GREEN (EQUIPMENT OFF) -W WHITE (POWER) -B BLUE (CONDITION IE BACKWASH IN PROGRESS) -A AMBER (ALARM CONDITION)
H/O/A	SWITCH -L/R (LOCAL - REMOTE) -L/O/A (LOCAL - OFF - AUTO) -L/O/R (LOCAL - OFF - REMOTE) -H/O/A (HAND - OFF - AUTO) -H/O/R (HAND - OFF - REMOTE)
START	PUSHBUTTON
START	PUSHBUTTON
	HORN
	BEACON
OIT	OPERATOR INTERFACE TERMINAL

SECURITY SYSTEM SYMBOLS

CCTV	CLOSED CIRCUIT TELEVISION CAMERA
PTZ	PAN, TILT, ZOOM CAMERA

GENERAL ABBREVIATIONS

AI	ANALOG INPUT
AL	ALARM PILOT LIGHT
AO	ANALOG OUTPUT
AS	AIR SUPPLY
ASP	APPLICATION SERVICE PROVIDER
BFV	BUTTERFLY VALVE
CCTV	CLOSED CIRCUIT TELEVISION
CH4	METHANE
CL2	CHLORINE
COND	CONDUCTIVITY
COMP	COMPUTER
CP	CONTROL PANEL
CPU	CENTRAL PROCESSING UNIT
CRC	CONTROL ROOM CONSOLE
CTU	CENTRAL TELEMETRY UNIT
DCU	DISTRIBUTED CONTROL UNIT
DI	DIGITAL OR DISCRETE INPUT
DO	DISSOLVED OXYGEN OR DIGITAL OUTPUT
DPU	DISTRIBUTED PROCESSING UNIT
EPP	ETHERNET PATCH PANEL
ES	EMERGENCY STOP
ESW	ETHERNET SWITCH
ETM	ELAPSED TIME METER
FC	FAIL CLOSED
FCP	FIELD CONTROL PANEL
FCS	FILTER CONTROL STATION
FCV	FLOW CONTROL VALVE
FLP	FAIL LAST POSITION
FO	FAIL OPEN
FOPP	FIBER OPTIC PATCH PANEL
FPR	FEEDER PROTECTION RELAY
H2S	HYDROGEN SULFIDE
HMI	HUMAN MACHINE INTERFACE
JB	JUNCTION BOX
IO	INPUT/OUTPUT
IR	INFARED
LAS	LIQUID AMMONIA SULFATE
LCP	LOCAL CONTROL PANEL
LCS	LOCAL CONTROL STATION
LT	LEVEL TRANSMITTER
LPU	LOCAL PROCESSING UNIT
LTS	LOCAL TERMINAL SYSTEM
MC	MOTOR CONTROLLER
NAOCL	SODIUM HYPOCHLORIDE
NC	NORMALLY CLOSED
NH3	AMMONIA
NIM	NETWORK INTERFACE MODULE
NO	NORMALLY OPEN
MCC	MOTOR CONTROL CENTER
MM	MULTI MODE FIBER OPTIC CABLE
MPR	MOTOR PROTECTION RELAY
OIT	OPERATIONS INTERFACE TERMINAL
OL	OVERLOAD
OWS	OPERATOR WORKSTATION
PB	PUSH BUTTON
PCSI	PROCESS CONTROL SYSTEM INTEGRATOR
pH	HYDROGEN ION
PLC	PROGRAMMABLE LOGIC CONTROLLER
PMCS	PROCESS MONITORING CONTROL SYSTEM
POLY	POLYMER
PQM	POWER QUALITY METER
PS	POWER SUPPLY
PSU	POWER SUPPLY UNIT
PV	PINCH VALVE
RBC	REMOTE BASE CONTROLLER
RIO	REMOTE INPUT OUTPUT
RTU	REMOTE TERMINAL UNIT
SCADA	SUPERVISORY CONTROL AND DATA AQUISITION
SM	SINGLE MODE FIBER OPTIC CABLE
SO2	SULFUR DIOXIDE
SOL	SOLENOID
SPD	SURGE PROTECTION DEVICE
UPS	UNINTERRUPTIBLE POWER SUPPLY
TC	TERMINATION CABINET
TURB	TURBIDITY
VIB	VIBRATION
VFD	VARIABLE FREQUENCY DRIVE
VLV	VALVE

MEANINGS OF IDENTIFICATION LETTERS

THIS TABLE APPLIES ONLY TO THE FUNCTIONAL IDENTIFICATION OF INSTRUMENTS.

	FIRST LETTER		SUCCEEDING LETTERS		
	MEASURED OR INITIATING VARIABLE	MODIFIER	READOUT OR PASSIVE FUNCTION	OUTPUT FUNCTION	MODIFIER
A	ANALYSIS/ANALYTICAL		ALARM		
B	BURNER, COMBUSTION			CLOSE, STOP, DECREASE (1)	
C	CONDUCTIVITY			CONTROL	
D	DENSITY (MASS) OR SPECIFIC GRAVITY	DIFFERENTIAL		OPEN START, INCREASE (1)	
E	VOLTAGE (EMF)		SENSOR (PRIMARY ELEMENT)		
F	FLOW RATE	RATIO (FRACTION)			FAIL (1)
G	GAUGING (DIMENSIONAL)		GLASS VIEWING DEVICE		
H	HAND				HIGH OR OPEN
I	CURRENT (ELECTRICAL)		INDICATE		
J	POWER	SCAN			
K	TIME OR TIME SCHEDULE	TIME RATE OR CHANGE		CONTROL STATION	
L	LEVEL		LIGHT (PILOT)		LOW OR CLOSED
M	MOISTURE, HUMIDITY, MOTOR, MOTION	MOMENTARY		MOTOR (1)	MIDDLE OR INTERMEDIATE
N	USERS CHOICE		USER'S CHOICE		ON OR OPERATE (1)
O	USER'S CHOICE		ORIFICE (RESTRICTION)		OVERLOAD (1)
P	PRESSURE OR VACUUM		POINT (TEST CONNECTION)	PUMP (1)	
Q	QUANTITY (2)	INTEGRATE OR TOTALIZE			
R	RADIATION		RECORD		
S	SPEED OR FREQUENCY	SAFETY		SWITCH	
T	TEMPERATURE			TRANSMIT	
U	MULTIVARIABLE (2)		MULTIFUNCTION (2)	MULTIFUNCTION (2)	MULTIFUNCTION (2)
V	VIBRATION, MECHANICAL ANALYSIS			VALVE, DAMPER OR LOUVER	
W	WEIGHT OR FORCE		WELL		UNCLASSIFIED (2)
X	UNCLASSIFIED (2)	X AXIS	UNCLASSIFIED (2)	UNCLASSIFIED (2)	UNCLASSIFIED (2)
Y	EVENT, STATE, PRESENCE	Y AXIS		RELAY, COMPUTE, CONVERT	
Z	POSITION, DIMENSION	Z AXIS		DRIVE, ACTUATE OR UNCLASSIFIED FINAL CONTROL ELEMENT	

COMMON HMI/INSTRUMENT ISA TAGGING

ABBREVIATION	MEANING
AIT	ANALYTICAL INDICATING TRANSMITTER
AE	ANALYTICAL ELEMENT
AI	CHEMICAL RESIDUAL/INDICATION
CT	CYCLE TIMER
FIT	FLOW INDICATING TRANSMITTER
FE	FLOW ELEMENT
FI	FLOW INDICATION
FS	FLOAT SWITCH
HS	HAND SWITCH
JAL	POWER ALARM LOW
II	CURRENT INDICATION
LIT	LEVEL INDICATING TRANSMITTER
LE	LEVEL ELEMENT
LI	LEVEL INDICATION
LSH	LEVEL SWITCH HIGH
LSL	LEVEL SWITCH LOW
LAL	LEVEL ALARM LOW
LAH	LEVEL ALARM HIGH
PIT	PRESSURE INDICATING TRANSMITTER
PE	PRESSURE ELEMENT
PI	PRESSURE INDICATION
PPU	PERPETUAL POWER UNIT
PSH	PRESSURE SWITCH HIGH
PSL	PRESSURE SWITCH LOW
SI	SPEED INDICATION
SIC	SPEED INDICATING CONTROLLER
TIT	TEMPERATURE INDICATING TRANSMITTER
TE	TEMPERATURE ELEMENT
TI	TEMPERATURE INDICATION
TSH	TEMPERATURE SWITCH HIGH
WIT	WEIGHT INDICATING TRANSMITTER
WE	WEIGHT ELEMENT
WI	WEIGHT INDICATION
XA	FAULT ANNUNCIATION
YL	MISC. EVENT LIGHT (IN REMOTE)

COMMON HMI/INSTRUMENT ISA TAGGING

ABBREVIATION	MEANING
ZCH	OPEN GATE/VALVE
ZCL	CLOSE GATE/VALVE
ZSH	POSITION SWITCH HIGH
ZSL	POSITION SWITCH LOW
ZLH	VALVE/GATE OPEN
ZLL	VALVE/GATE CLOSED
ZIT	POSITION INDICATING TRANSMITTER

GENERAL NOTE

THIS IS A STANDARD LEGEND. SOME SYMBOLS MAY NOT APPEAR ON THE DRAWINGS.

RPS A TETRA TECH COMPANY
Texas PE Firm Reg. #F-929
575 N. Dairy Ashford, Suite 700, Houston, Texas 77079
T +1 281 589 7257
E usinfrastructure@rpsgroup.com

SURVEYED BY:
FB NO. F-4578

FOR INTERIM REVIEW ONLY NOT INTENDED FOR PERMIT, BIDDING OR CONSTRUCTION PURPOSES.
ENGINEER:
HOSS FOROUZAN
P.E. SERIAL NO.77748
03/30/2026

CITY OF HOUSTON
HOUSTON PUBLIC WORKS

RECONSTRUCTION & REHABILITATION
COH LIFT STATIONS

INSTRUMENTATION LEGENDS & SYMBOLS–II

WBS NUMBER	FOR CITY OF HOUSTON USE ONLY
R-000267-00178-3	
DRAWING SCALE	
AS NOTED	
CITY OF HOUSTON PM	
TAHA LOTIA	
SHEET NO. 66 OF 268	

STD-E-10

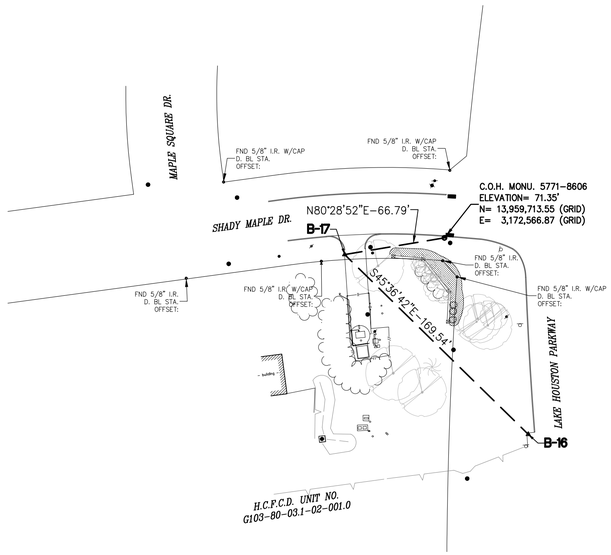

SURVEY BASELINE POINTS DATA (TEMPORARY BENCHMARK)						
POINT No.	NORTHING (SURFACE)	EASTING (SURFACE)	NORTHING (GRID)	EASTING (GRID)	ELEVATION	DESCRIPTION
B-16	13,961,398.66	3,173,034.59	13,959,583.92	3,172,622.15	77.15'	SET 'X' CUT ON CONC.
B-17	13,961,517.26	3,172,913.43	13,959,702.50	3,172,501.01	73.19'	SET 'X' CUT ON CONC.

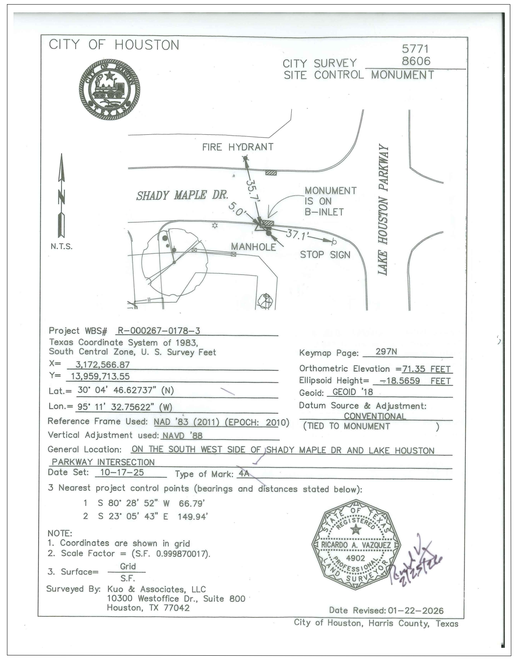



EXIST. TOPOGRAPHIC LEGEND

- ASPHALT SYMBOL
- B OR BB INLET
- BUSH
- C INLET
- CLEANOUT
- brick column
- DOWN GUY
- E INLET
- ELEC MANHOLE
- FIRE HYDRANT
- GAS METER
- GAS VALVE
- GATE
- GRATE INLET
- GRATE INLET
- MAIL BOX
- STORM MANHOLE
- SANITARY MANHOLE
- PLANTER
- POWER POLE
- POWER POLE W/LT.
- SIGN
- SIGNAL POLE
- SPRINKER VALVE
- SPRINKLER HEAD
- STREET LIGHT/FLOOD LIGHT
- STREET LIGHT/PARKING LIGHT
- TREE
- TREE STUMP
- TREE-CREPE MYRTLE
- TREE-PINE
- WATER METER
- WATER VALVE
- IRRIGATION CONTROL VALVE

ABBREVIATIONS

BC – BACK OF CURB
EA – EDGE OF ASPHALT
EC – EDGE OF CONCRETE
EG – EDGE OF GRAVEL
FH – FIRE HYDRANT
FC – FENCE CORNER
LT – LIGHT POLE
MB – MAIL BOX
MH – MANHOLE
PP – POWER POLE
PP/LIGHT – POWER POLE W/LIGHT
STLT – STREET LIGHT
TRLT – TRAFFIC LIGHT
WM – WATER METER

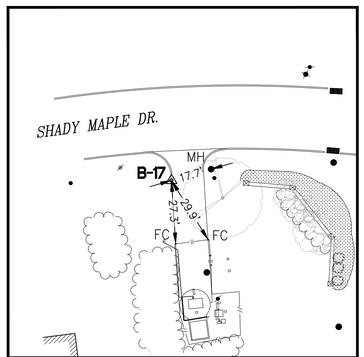

T.B.M. B-17

N.T.S.

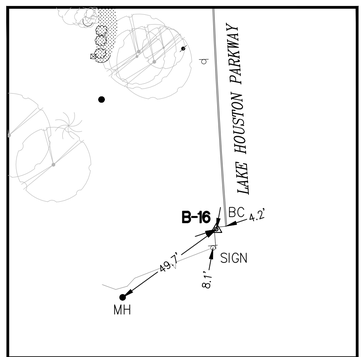

T.B.M. B-16

N.T.S.

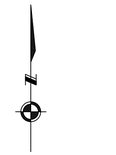

50 0 25 50

SCALE: 1" = 50'

NO.	DATE	REVISION	APP.

BENCHMARK:

CITY OF HOUSTON MONUMENT 5771-8606 IS AN ALUMINUM DISK ON TOP OF INLET LOCATED ON SHADY MAPLE DR APPROXIMATELY 50 FEET EAST FROM THE INTERSECTION OF W LAKE HOUSTON PKWY.

ELEV. 71.92 FEET NAVD 1988, 2001 AJUSTMENT(PROJECT DATUM)
ELEV. 71.35 FEET NAVD 1988, (GEOID '18)*

* OBSERVED BY GPS SURVEYING AND PROCESSED IN REFERENCE TO THE CORS DATED OCTOBER 17, 2025.

VERTICAL DATUM ADJUSTMENT:

THE ELEVATION DIFFERENCE IN BETWEEN THE FLOODPLAIN REFERENCE MARK'S (RM 070375)PUBLISHED DATUM NAVD 1988, 2001 ADJUSTMENT AND DATUM NAVD 1988, (GEOID '18) IS 0.57'.

NAVD 1988, 2001 ADJ. ELEVATION
= NAVD 1988 (GEOID '18) ELEVATION + 0.57 FT

NOTE:

ALL BEARINGS AND DISTANCES ARE BASED ON TEXAS STATE PLANE COORDINATE SYSTEM, SOUTH CENTRAL ZONE NO. 4204, NAD83. ALL DISTANCES ARE IN SURFACE.

THE COORDINATES SHOWN HEREON ARE TEXAS SOUTH CENTRAL ZONE NO. 4204 STATE PLANE GRID COORDINATES (NAD83) AND MAY BE BROUGHT TO SURFACE BY DIVIDING BY THE COMBINED SCALE FACTOR 0.999870017.

LEGEND:

B-X	SURVEY CONTROL POINT NUMBER
C-X	DESIGN BASELINE POINT NUMBER
⚠	SURVEY CONTROL POINT
●	DESIGN BASELINE POINT
Ⓐ	CITY OF HOUSTON MONUMENT
S. BL:	SURVEY BASELINE

RPS
A TETRA TECH COMPANY
Texas PE Firm Reg. #F-929
575 N. Dairy Ashford, Suite 700,
Houston, Texas 77079
T +1 281 589 7257
E usinfrastructure@rpsgroup.com

KUO & ASSOCIATES
ENGINEERING + SURVEYING
10300 Westoffice Dr., Suite 800, Houston, Texas 77042
Tel: 713-975-8769, Fax: 713-975-0920, www.kuoassociates.com
TBPELS Firm Registration No. F-4578
TBPELS Firm Registration No. 1007560

THIS DOCUMENT IS RELEASED FOR THE PURPOSE OF INTERIM REVIEW UNDER THE AUTHORITY OF

RICARDO A. VAZQUEZ, R.P.L.S.
TEXAS REG. NO.: 4902

ON 02/26/2026
IT IS NOT TO BE USED FOR PERMIT, BIDDING OR CONSTRUCTION PURPOSES

CITY OF HOUSTON

HOUSTON PUBLIC WORKS

RECONSTRUCTION & REHABILITATION
COH LIFT STATIONS

SHADY MAPLES LS

SURVEY CONTROL MAP

SM-SC-1

WBS NUMBER	FOR CITY OF HOUSTON USE ONLY
R-000267-00178A-3	
DRAWING SCALE	
AS SHOWN	
CITY OF HOUSTON PM	
TAHA LOTIA	
SHEET NO. 67 OF 268	

National Flood Hazard Layer FIRMette

FEMA

95°11'53"W 30°5'2"N



95°11'16"W 30°4'31"N

Basemap Imagery Source: USGS National Map 2023

Legend

SEE FIS REPORT FOR DETAILED LEGEND AND INDEX MAP FOR FIRM PANEL LAYOUT

SPECIAL FLOOD HAZARD AREAS
- Without Base Flood Elevation (BFE) *Zone A, V, A99*
- With BFE or Depth *Zone AE, AO, AH, VE, AR*
- Regulatory Floodway

OTHER AREAS OF FLOOD HAZARD
- 0.2% Annual Chance Flood Hazard, Areas of 1% annual chance flood with average depth less than one foot or with drainage areas of less than one square mile *Zone X*
- Future Conditions 1% Annual Chance Flood Hazard *Zone X*
- Area with Reduced Flood Risk due to Levee. See Notes. *Zone X*
- Area with Flood Risk due to Levee *Zone D*

OTHER AREAS
- NO SCREEN — Area of Minimal Flood Hazard *Zone X*
- Effective LOMRs
- Area of Undetermined Flood Hazard *Zone D*

GENERAL STRUCTURES
- Channel, Culvert, or Storm Sewer
- Levee, Dike, or Floodwall

OTHER FEATURES
- 20.2 / 17.5 — Cross Sections with 1% Annual Chance Water Surface Elevation
- Coastal Transect
- Base Flood Elevation Line (BFE)
- Limit of Study
- Jurisdiction Boundary
- Coastal Transect Baseline
- Profile Baseline
- Hydrographic Feature

MAP PANELS
- Digital Data Available
- No Digital Data Available
- Unmapped

N

The pin displayed on the map is an approximate point selected by the user and does not represent an authoritative property location.

This map complies with FEMA's standards for the use of digital flood maps if it is not void as described below. The basemap shown complies with FEMA's basemap accuracy standards

The flood hazard information is derived directly from the authoritative NFHL web services provided by FEMA. This map was exported on 7/31/2024 at 1:55 PM and does not reflect changes or amendments subsequent to this date and time. The NFHL and effective information may change or become superseded by new data over time.

This map image is void if the one or more of the following map elements do not appear: basemap imagery, flood zone labels, legend, scale bar, map creation date, community identifiers, FIRM panel number, and FIRM effective date. Map images for unmapped and unmodernized areas cannot be used for regulatory purposes.

RPS — A TETRA TECH COMPANY
Texas PE Firm Reg. #F-929
575 N. Dairy Ashford, Suite 700,
Houston, Texas 77079
T +1 281 589 7257
E usinfrastructure@rpsgroup.com

SURVEYED BY: KUO Inc.
FB NO. F-4578

This document is released for the purposes of interim review only under the authority of:

Neha Raval, P.E.
Texas P.E. No. 141506
03/30/2026

It is not to be used for bidding, construction, or permitting purposes.

CITY OF HOUSTON

HOUSTON PUBLIC WORKS

RECONSTRUCTION & REHABILITATION
COH LIFT STATIONS

FIRMETTE – SHADY MAPLE LS
SM–FC–1

WBS NUMBER	FOR CITY OF HOUSTON USE ONLY
R–000267–0178–3	
DRAWING SCALE	
AS NOTED	
CITY OF HOUSTON PM	
TAHA LOTIA	
SHEET NO. 68 OF 268	

PLOTTED: 3/30/2026 4:47 PM
PLOT STYLE: Coh_ctb_230809.ctb
FILE NAME: FIRMETTE – SHADY MAPLES LS.dwg

PLOTTED: 3/30/2026 4:47 PM

PLOT STYLE: Coh_ctb_230809.ctb

FILE NAME: EXISTING SITE PLAN - SHADY MAPLE LS.dwg

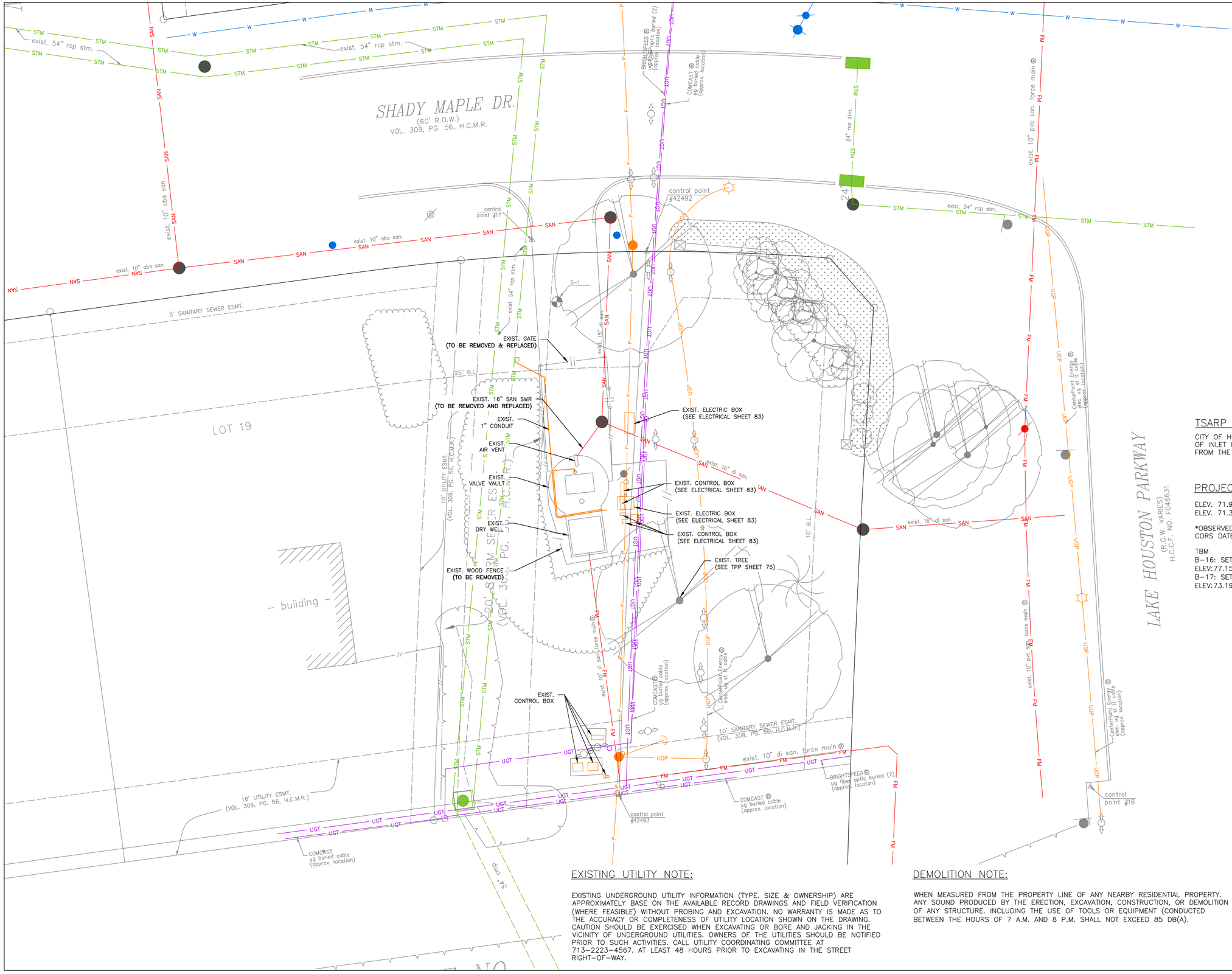

TSARP CONVERSION REFERENCE MONUMENT

CITY OF HOUSTON MONUMENT 5771-8606 IS AN ALUMINUM DISK ON TOP OF INLET LOCATED ON SHADY MAPLE DR APPROXIMATELY 50 FEET EAST FROM THE INTERSECTION OF W LAKE PKWY.

PROJECT SITE MONUMENT

ELEV. 71.92 FEET NAVD 1988, 2001 ADJUSTMENT (PROJECT DATUM)
ELEV. 71.35 FEET NAVD 1988, (GEOID '18)*

*OBSERVED BY GPS SURVEYING AND PROCESSED IN REFERENCE TO THE CORS DATED OCTOBER 17, 2025.

TBM
B-16: SET "X" CUT ON CONC,
ELEV:77.15'
B-17: SET "X" CUT ON CONC,
ELEV:73.19'

EXISTING UTILITY NOTE:

EXISTING UNDERGROUND UTILITY INFORMATION (TYPE, SIZE & OWNERSHIP) ARE APPROXIMATELY BASE ON THE AVAILABLE RECORD DRAWINGS AND FIELD VERIFICATION (WHERE FEASIBLE) WITHOUT PROBING AND EXCAVATION. NO WARRANTY IS MADE AS TO THE ACCURACY OR COMPLETENESS OF UTILITY LOCATION SHOWN ON THE DRAWING. CAUTION SHOULD BE EXERCISED WHEN EXCAVATING OR BORE AND JACKING IN THE VICINITY OF UNDERGROUND UTILITIES. OWNERS OF THE UTILITIES SHOULD BE NOTIFIED PRIOR TO SUCH ACTIVITIES. CALL UTILITY COORDINATING COMMITTEE AT 713-2223-4567. AT LEAST 48 HOURS PRIOR TO EXCAVATING IN THE STREET RIGHT-OF-WAY.

DEMOLITION NOTE:

WHEN MEASURED FROM THE PROPERTY LINE OF ANY NEARBY RESIDENTIAL PROPERTY. ANY SOUND PRODUCED BY THE ERECTION, EXCAVATION, CONSTRUCTION, OR DEMOLITION OF ANY STRUCTURE. INCLUDING THE USE OF TOOLS OR EQUIPMENT (CONDUCTED BETWEEN THE HOURS OF 7 A.M. AND 8 P.M. SHALL NOT EXCEED 85 DB(A).

RPS
A TETRA TECH COMPANY
Texas PE Firm Reg. #F-929
575 N. Dairy Ashford, Suite 700,
Houston, Texas 77079
T +1 281 589 7257
E usinfrastructure@rpsgroup.com

SURVEYED BY: KUO Inc.
FB NO. F-4578

This document is released for the purposes of interim review only under the authority of:

Neha Raval, P.E.
Texas P.E. No. 141506
03/30/2026

It is not to be used for bidding, construction, or permitting purposes.

CITY OF HOUSTON
HOUSTON PUBLIC WORKS

RECONSTRUCTION & REHABILITATION
COH LIFT STATIONS

EXISTING & DEMOLITION PLAN -
SHADY MAPLE LS
SM-C-1

WBS NUMBER	FOR CITY OF HOUSTON USE ONLY
R-000267-0178-3	
DRAWING SCALE	
AS NOTED	
CITY OF HOUSTON PM	
TAHA LOTIA	
SHEET NO. 69 OF 268	

PLOTTED: 3/30/2026 4:47 PM

PLOT STYLE: Coh_ctb_230809.ctb

FILE NAME: PROPOSED SITE PLAN – SHADY MAPLE LS.dwg

SHADY MAPLE DR.
(60' R.O.W.)
VOL. 309, PG. 56, H.C.M.R.

LAKE HOUSTON PARKWAY
(R.O.W. VARIES)
H.C.C.F. NO. F046631

LOT 19

– building –

248 LF OF CHAIN LINK FENCE WITH GATE (SEE DETAIL SHEET 40)

CLEAN & RE–COAT EXISTING SAN MH PER SPECIFICATION 09901

9 LF OF 16" SAN. @ 0.19%

PUMP J–BOXES (SEE ELECTRICAL SHEET 83)

REMOVE AND REPLACE BACKFLOW PREVENTER ASSEMBLY WITH HOT–BOX TYPE VANDAL PROOF ENCLOSURE

CLEAN & RE–COAT EXISTING WET WELL PER SPECIFICATION 09901

ABOVE GROUND PIPING (SEE PROCESS SHEET 81)

CONC. PAVEMENT (SEE DETAIL SHEET 28)

FM BYPASS MH (SEE DETAIL SHEET 13)

PLATFORM FOR GENERATOR

NATURAL GAS GENERATOR (SEE ELECTRICAL SHEET 83)

CONTRACTOR TO COORDINATE WITH CENTERPOINT ENERGY FOR GAS SERVICE CONNECTION

3 LF OF PROP 10" FM

1–10"x45° BEND
1–10" WET CONNECTION

CONC. PAVEMENT

LIGHTING TRANSFORMER (SEE ELECTRICAL SHEET 83)

ELECTRIC SERVICE RACK (SEE ELECTRICAL SHEET 83)

CONTROL PANEL (SEE ELECTRICAL SHEET 83)

COMM/PPU (SEE ELECTRICAL SHEET 83)

control point #42492

control point #42493

control point #16

control point #17

exist. 54" rcp stm.

exist. 10" abs san.

exist. 10" di san. force main

exist. 16" di san.

exist. 24" rcp stm.

exist. 10" pvc san. force main

exist. 15" di san.

24" rcp stm.

BRIGHTSPEED fiber optic buried (2) ug fiber optic (approx. location)

COMCAST ug buried cable (approx. location)

CenterPoint Energy elec. ug st. lt. cable (approx. location)

46.4'
44.4'
25'
84.8'
82.7'
77.8'
79.7'
11.8'
3.3'
6.8'
4.2'
9.8'
17.3'
3.0'
1.7'
7.3'
5.5'
12.6'
1.0'
3.0'
3.5'
43.1'
45.1'
1'

N

0' 5' 10' 20'

SCALE: 1"=10'

CONSTRUCTION NOTES

1. VERIFY ALL EXISTING DIMENSIONS, ELEVATIONS, INVERTS, AND UTILITIES IN THE FIELD BEFORE CONSTRUCTION.
2. UTILITY LOCATIONS SHOWN ARE APPROXIMATE AND BASED ON AVAILABLE RECORDS AND SURVEY INFORMATION.
3. MAINTAIN CONTINUOUS SANITARY SEWER SERVICE DURING CONSTRUCTION; PROVIDE BYPASS PUMPING AS REQUIRED.
4. ABANDON EXISTING SEWERS AND APPURTENANCES AS INDICATED AND IN ACCORDANCE WITH CITY OF HOUSTON REQUIREMENTS.
5. PROTECT EXISTING FACILITIES DESIGNATED TO REMAIN.
6. PROVIDE POSITIVE DRAINAGE AWAY FROM ALL LIFT STATION STRUCTURES AND EQUIPMENT PADS.
7. RESTORE DISTURBED AREAS TO EQUAL OR BETTER CONDITION.

TSARP CONVERSION REFERENCE MONUMENT

CITY OF HOUSTON MONUMENT 5771–8606 IS AN ALUMINUM DISK ON TOP OF INLET LOCATED ON SHADY MAPLE DR APPROXIMATELY 50 FEET EAST FROM THE INTERSECTION OF W LAKE PKWY.

PROJECT SITE MONUMENT

ELEV. 71.92 FEET NAVD 1988, 2001 ADJUSTMENT (PROJECT DATUM)
ELEV. 71.35 FEET NAVD 1988, (GEOID '18)*

*OBSERVED BY GPS SURVEYING AND PROCESSED IN REFERENCE TO THE CORS DATED OCTOBER 17, 2025.

TBM
B–16: SET "X" CUT ON CONC,
ELEV:77.15'
B–17: SET "X" CUT ON CONC,
ELEV:73.19'

RPS A TETRA TECH COMPANY
Texas PE Firm Reg. #F-929
575 N. Dairy Ashford, Suite 700,
Houston, Texas 77079
T +1 281 589 7257
E usinfrastructure@rpsgroup.com

SURVEYED BY: KUO Inc.
FB NO. F–4578

This document is released for the purposes of interim review only under the authority of:

Neha Raval, P.E.
Texas P.E. No. 141506
03/30/2026

It is not to be used for bidding, construction, or permitting purposes.

CITY OF HOUSTON
HOUSTON PUBLIC WORKS

RECONSTRUCTION & REHABILITATION
COH LIFT STATIONS

PROPOSED SITE PLAN
– SHADY MAPLE LS
SM–C–2

WBS NUMBER	FOR CITY OF HOUSTON USE ONLY
R–000267–0178–3	
DRAWING SCALE	
AS NOTED	
CITY OF HOUSTON PM	
TAHA LOTIA	
SHEET NO. 70 OF 268	



NOTES:
1. CONTRACTOR TO MAINTAIN POSITIVE DRAINAGE.

LEGEND	
EG XX.XX	EXISTING GRADE
FG XX.XX	FINISHED GRADE
TC XX.XX	TOP OF CONCRETE
XX.XX%	FLOW DIRECTION

TSARP CONVERSION REFERENCE MONUMENT

CITY OF HOUSTON MONUMENT 5771-8606 IS AN ALUMINUM DISK ON TOP OF INLET LOCATED ON SHADY MAPLE DR APPROXIMATELY 50 FEET EAST FROM THE INTERSECTION OF W LAKE PKWY.

PROJECT SITE MONUMENT

ELEV. 71.92 FEET NAVD 1988, 2001 ADJUSTMENT (PROJECT DATUM)
ELEV. 71.35 FEET NAVD 1988, (GEOID '18)*

*OBSERVED BY GPS SURVEYING AND PROCESSED IN REFERENCE TO THE CORS DATED OCTOBER 17, 2025.

TBM
B-16: SET "X" CUT ON CONC,
ELEV:77.15'
B-17: SET "X" CUT ON CONC,
ELEV:73.19'

TPS
A TETRA TECH COMPANY
Texas PE Firm Reg. #F-929
575 N. Dairy Ashford, Suite 700,
Houston, Texas 77079
T +1 281 589 7257
E usinfrastructure@rpsgroup.com

SURVEYED BY: KUO Inc.
FB NO. F-4578

This document is released for the purposes of interim review only under the authority of:

Neha Raval, P.E.
Texas P.E. No. 141506
03/30/2026

It is not to be used for bidding, construction, or permitting purposes.

CITY OF HOUSTON
HOUSTON PUBLIC WORKS

RECONSTRUCTION & REHABILITATION
COH LIFT STATIONS

PROPOSED GRADING -
SHADY MAPLE LS
SM-C-3

WBS NUMBER	FOR CITY OF HOUSTON USE ONLY
R-000267-0178-3	
DRAWING SCALE	
AS NOTED	
CITY OF HOUSTON PM	
TAHA LOTIA	
SHEET NO. 71 OF 268	

PLOTTED: 3/30/2026 4:47 PM
PLOT STYLE: Coh_ctb_230809.ctb
FILE NAME: PROPOSED GRADING - SHADY MAPLE LS.dwg

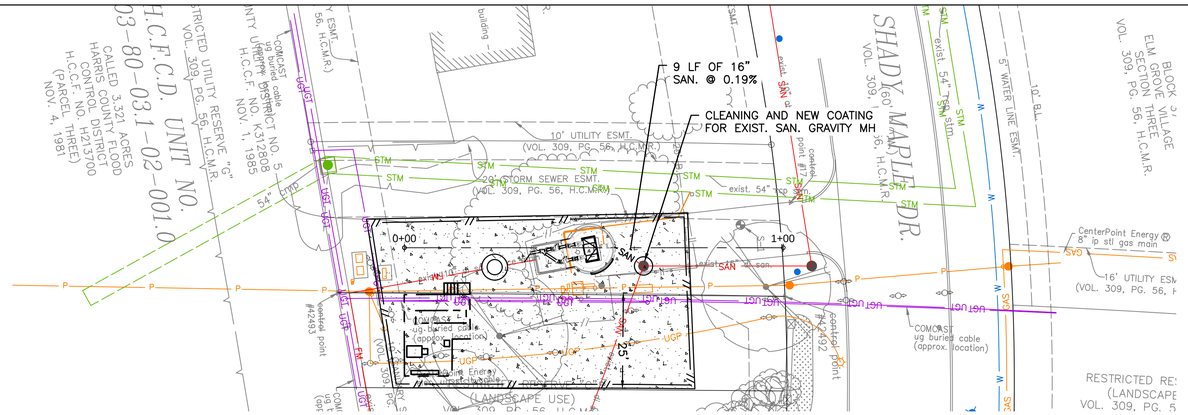

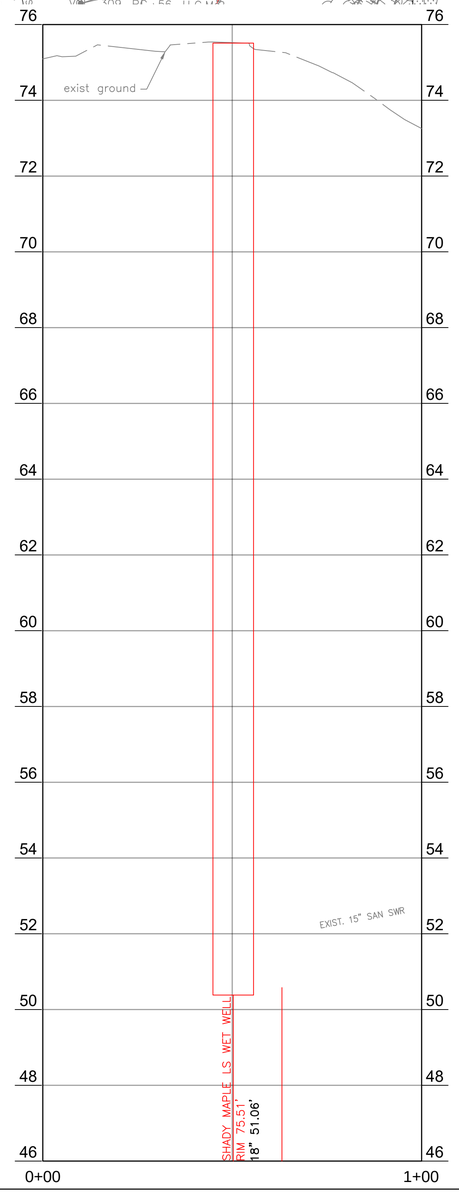

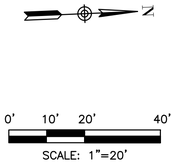

RPS
A TETRA TECH COMPANY
Texas PE Firm Reg. #F-929
575 N. Dairy Ashford, Suite 700,
Houston, Texas 77079
T +1 281 589 7257
E usinfrastructure@rpsgroup.com

SURVEYED BY: KUO Inc.
FB NO. F-4578

This document is released for the purposes of interim review only under the authority of:

Neha Raval, P.E.
Texas P.E. No. 141506
03/30/2026

It is not to be used for bidding, construction, or permitting purposes.

CITY OF HOUSTON
HOUSTON PUBLIC WORKS

RECONSTRUCTION & REHABILITATION
COH LIFT STATIONS

PLAN AND PROFILE
–SHADY MAPLE LS
SM–C–4

WBS NUMBER	FOR CITY OF HOUSTON USE ONLY
R–000267–0178–3	
DRAWING SCALE	
AS NOTED	
CITY OF HOUSTON PM	
TAHA LOTIA	
SHEET NO. 72 OF 268	

PLOTTED: 3/30/2026 4:47 PM
PLOT STYLE: Coh_ctb_230809.ctb
FILE NAME: PLAN & PROFILE – SHADY MAPLE LS.dwg

PLOTTED: 3/30/2026 4:47 PM

PLOT STYLE: Coh_ctb_230809.ctb

FILE NAME: SWPPP – SHADY MAPLE LS.dwg

SHADY MAPLE DR.
(60' R.O.W.)
VOL. 309, PG. 56, H.C.M.R.

LAKE HOUSTON PARKWAY
(R.O.W. VARIES)
H.C.C.F. NO. F046631

5' SANITARY SEWER ESMT.

LOT 19

– building –

20' STORM SEWER ESMT.
(VOL. 309, PG. 56, H.C.M.R.)

10' UTILITY ESMT.
(VOL. 309, PG. 56, H.C.M.R.)

16' UTILITY ESMT.
(VOL. 309, PG. 56, H.C.M.R.)

10' SANITARY SEWER ESMT.
(VOL. 309, PG. 56, H.C.M.R.)

25' B.L.

10' B.L.

exist. 54" rcp stm.

exist. 10" abs san.

exist. 10" di san. force main

exist. 10" pvc san. force main

exist. 24" rcp stm.

exist. 16" di san.

exist. 15" di san.

24" rcp stm.

BRIGHTSPEED ug fiber optic buried (2) (approx. location)

COMCAST ug buried cable (approx. location)

11.8'
6.8'
4.2'
9.8'
17.3'
3.0'
5.5'
7.3'
12.6'
1.0'
3.0'
3.5'

54" cmp

N

0' 5' 10' 20'
SCALE: 1"=10'

LEGEND

- RFB — REINFORCED FILTER FABRIC BARRIER
- IPB — INLET PROTECTION BARRIER
- SCA — STABILIZED CONSTRUCTION ACCESS
- CTW — CONCRETE TRUCK WASHOUT AREA

TPS
A TETRA TECH COMPANY
Texas PE Firm Reg. #F-929
575 N. Dairy Ashford, Suite 700,
Houston, Texas 77079
T +1 281 589 7257
E usinfrastructure@rpsgroup.com

SURVEYED BY: KUO Inc.
FB NO. F-4578

This document is released for the purposes of interim review only under the authority of:

Neha Raval, P.E.
Texas P.E. No. 141506
03/30/2026

It is not to be used for bidding, construction, or permitting purposes.

CITY OF HOUSTON
HOUSTON PUBLIC WORKS

RECONSTRUCTION & REHABILITATION
COH LIFT STATIONS

SWPPP – SHADY MAPLE LS
SM–C–5

WBS NUMBER	FOR CITY OF HOUSTON USE ONLY
R–000267–0178–3	
DRAWING SCALE	
AS NOTED	
CITY OF HOUSTON PM	
TAHA LOTIA	
SHEET NO. 73 OF 268	

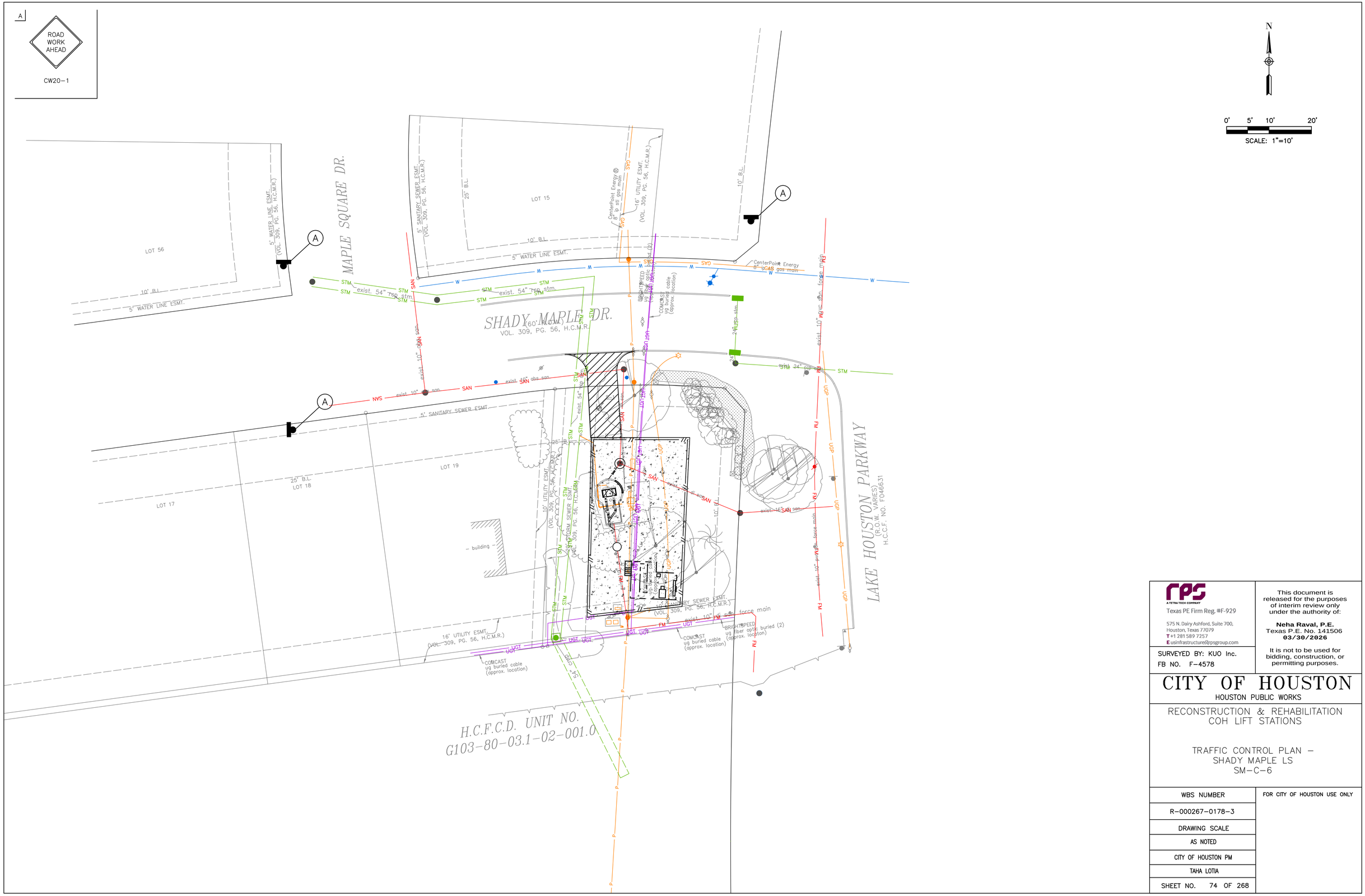

PLOTTED: 3/30/2026 4:47 PM

PLOT STYLE: Coh_ctb_230809.ctb

FILE NAME: TCP_SHADY MAPLE.dwg

rps
A TETRA TECH COMPANY
Texas PE Firm Reg. #F-929
575 N. Dairy Ashford, Suite 700,
Houston, Texas 77079
T +1 281 589 7257
E usinfrastructure@rpsgroup.com

This document is released for the purposes of interim review only under the authority of:

Neha Raval, P.E.
Texas P.E. No. 141506
03/30/2026

It is not to be used for bidding, construction, or permitting purposes.

SURVEYED BY: KUO Inc.
FB NO. F-4578

CITY OF HOUSTON
HOUSTON PUBLIC WORKS

RECONSTRUCTION & REHABILITATION
COH LIFT STATIONS

TRAFFIC CONTROL PLAN –
SHADY MAPLE LS
SM-C-6

WBS NUMBER	FOR CITY OF HOUSTON USE ONLY
R-000267-0178-3	
DRAWING SCALE	
AS NOTED	
CITY OF HOUSTON PM	
TAHA LOTIA	
SHEET NO. 74 OF 268	

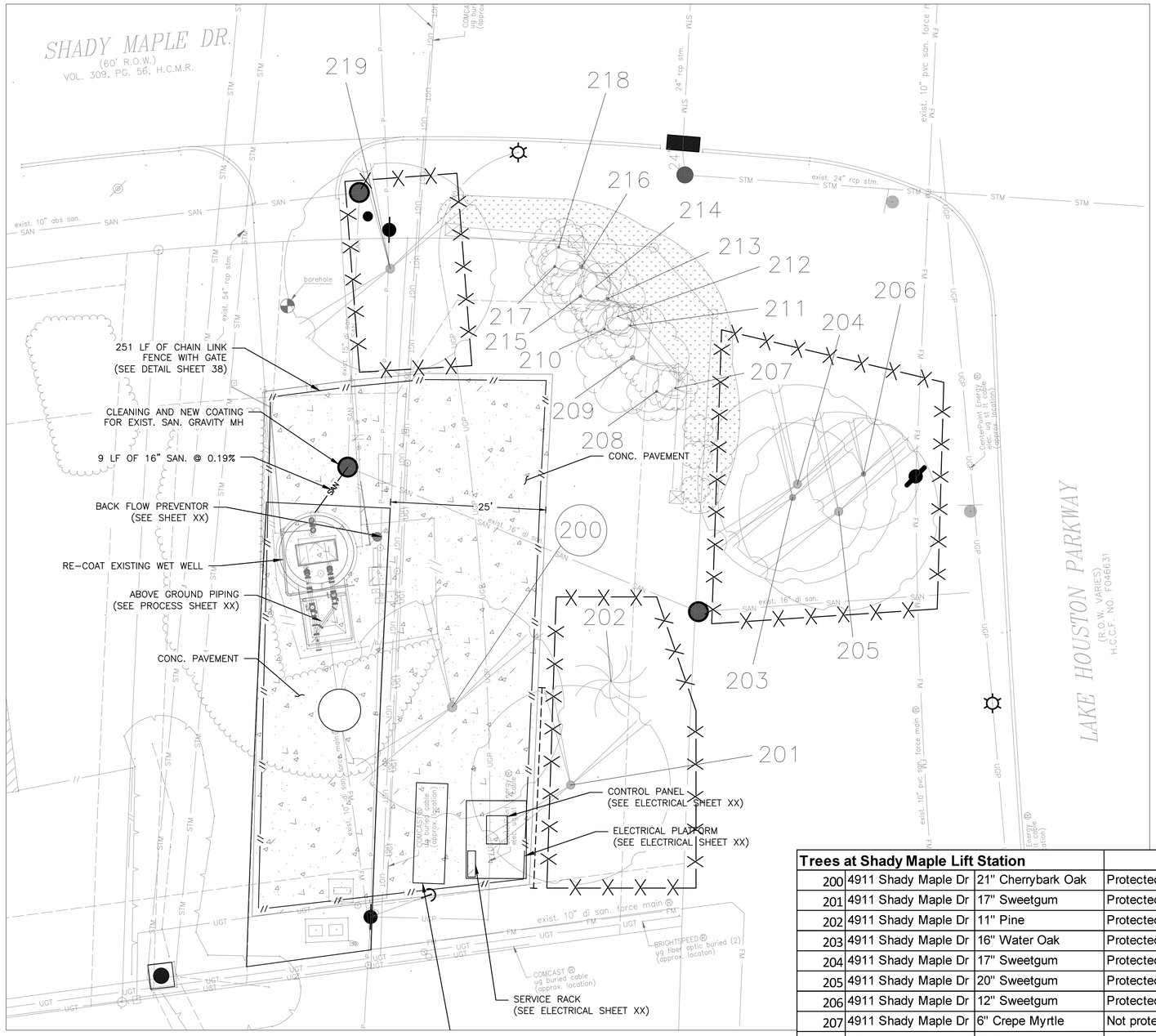

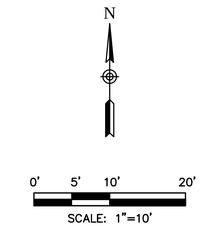

NOTE:

1. THIS TREE PROTECTION PLAN WAS DEVELOPED WITH INFORMATION PROVIDED BY DESIGN ENGINEER IN DRAWINGS DATED MARCH 2026. THE PLAN CONSIDERS ALL FITTINGS, VERTICAL OFFSETS AND AREAS OF NECESSARY EXCAVATION. CHANGES MADE TO DESIGN MAY COMPROMISE THE TREE PROTECTION PLAN. REFER SPECIFICATIONS 01562 AND 02915.
2. CN KOEHL URBAN FORESTRY, INC. HAS NOT BEEN CONTRACTED TO COMPLETE ANY TREE RISK ASSESSMENTS ON THIS PROJECT–THIS TPP INCLUDES PROTECTION MEASURES FOR SPECIES OF TREES PROTECTED BY APPLICABLE ORDINANCE ONLY. CN KOEHL URBAN FORESTRY, INC. DOES NOT GUARANTEE CONDITION OR STRUCTURAL INTEGRITY OF ANY TREE LOCATED ON OR ADJACENT TO THIS PROJECT.
3. IN AREAS WHERE INDIVIDUAL TREES HAVE NOT BEEN TIED IN BY SURVEY, APPROXIMATE LOCATION IS INDICATED ON TPP WITH A DOT AND TREE NUMBER. ACCURACY OF REPRESENTED LOCATION IS NOT GUARANTEED BY CN KOEHL URBAN FORESTRY, INC.

TREE PRESERVATION PLAN LEGEND

1	TREE NUMBER/LOCATION
①	TREE TO BE REMOVED
—X—	TREE PROTECTION FENCE
⊢– – –⊣	ROOT PRUNING TRENCH

Trees at Shady Maple Lift Station						
200	4911 Shady Maple Dr	21" Cherrybark Oak	Protected	Remove for LS expansion	Remove tree, Provide 21" in mitigation/replacement
201	4911 Shady Maple Dr	17" Sweetgum	Protected	40% dieback	Root prune for concrete pavement, Fence
202	4911 Shady Maple Dr	11" Pine	Protected		Fence
203	4911 Shady Maple Dr	16" Water Oak	Protected	Suppressed	Fence
204	4911 Shady Maple Dr	17" Sweetgum	Protected		Fence
205	4911 Shady Maple Dr	20" Sweetgum	Protected		Fence
206	4911 Shady Maple Dr	12" Sweetgum	Protected		Fence
207	4911 Shady Maple Dr	6" Crepe Myrtle	Not protected		
208	4911 Shady Maple Dr	7" Crepe Myrtle	Not protected		
209	4911 Shady Maple Dr	6" Crepe Myrtle	Not protected		
210	4911 Shady Maple Dr	8" Crepe Myrtle	Not protected		
211	4911 Shady Maple Dr	6" Crepe Myrtle	Not protected		
212	4911 Shady Maple Dr	7" Crepe Myrtle	Not protected		
213	4911 Shady Maple Dr	6" Crepe Myrtle	Not protected		
214	4911 Shady Maple Dr	6" Crepe Myrtle	Not protected		
215	4911 Shady Maple Dr	8" Crepe Myrtle	Not protected		
216	4911 Shady Maple Dr	7" Crepe Myrtle	Not protected		
217	4911 Shady Maple Dr	6" Crepe Myrtle	Not protected		
218	4911 Shady Maple Dr	6" Crepe Myrtle	Not protected		
219	4911 Shady Maple Dr	17" Magnolia	Protected	Topped by CPE	Fence

C.N. Koehl
Urban Forestry, Inc.
210 Stone Bush Ct. ◦ Katy, Texas 77493
281–391–0022 ckoehl@koehlurbanforestry.com

APPROVED:

RPS
A TETRA TECH COMPANY
Texas PE Firm Reg. #F-929
575 N. Dairy Ashford, Suite 700,
Houston, Texas 77079
T +1 281 589 7257
E usinfrastructure@rpsgroup.com

SURVEYED BY: KUO Inc.
FB NO. F–4578

CITY OF HOUSTON
HOUSTON PUBLIC WORKS

RECONSTRUCTION & REHABILITATION
COH LIFT STATIONS

TREE PROTECTION PLAN
– SHADY MAPLE LS
SM–C–7

SHEET 2 OF 6

WBS NUMBER	FOR CITY OF HOUSTON USE ONLY
R–000267–0178–3	
DRAWING SCALE	
AS NOTED	
CITY OF HOUSTON PM	
TAHA LOTIA	
SHEET NO. 75 OF 268	

PLOTTED: 3/25/2026 11:29 AM
PLOT STYLE: CNKoehl.ctb
FILE PATH: C:\Users\Ned\Desktop\UPCOMING PROJECTS\TETRATECH COH LS REHAB\02 PROPOSED TPP – SHADY MAPLE LS.dwg

PLOTTED: 3/27/2026 9:39:22 AM
PLOT STYLE:
Autodesk Docs://200-317106-24001 COH LS Rehab Design/M-LIFT STATIONS-200-317106-24001_v25.rvt

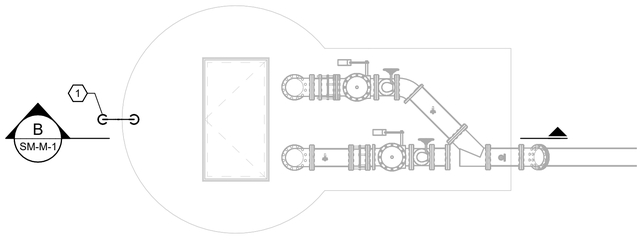

SHADY MAPLE LIFT STATION MECHANICAL PLAN
SCALE: 1/4" = 1'-0"

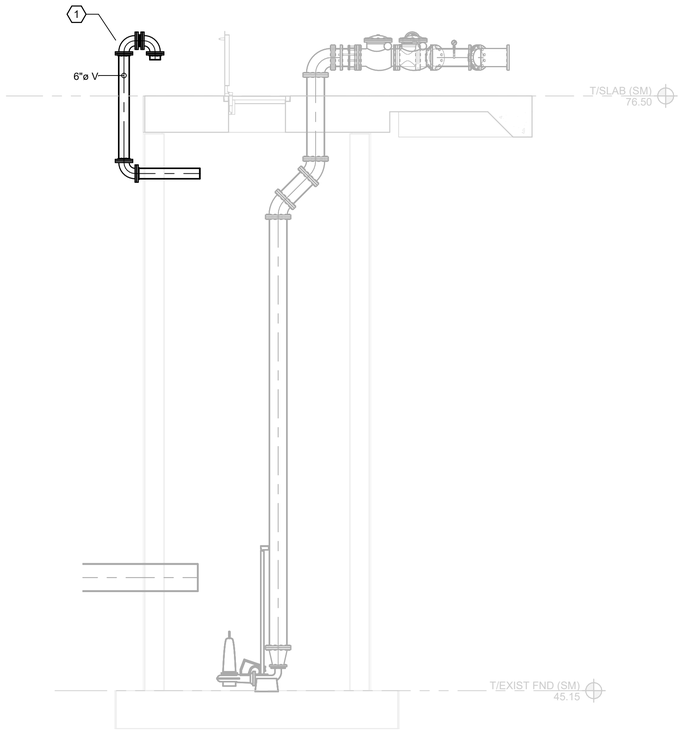

B
SM-M-1 SHADY MAPLE LIFT STATION MECHANICAL SECTION
SCALE: 1/4" = 1'-0"

KEYNOTE

1 PROVIDE PASSIVE GOOSENECK VENT FOR LIFT STATION WET WELL. COORDINATE WITH STRUCTURAL FOR PIPE PENETRATION THROUGH SIDEWALL OF WET WELL PER MECHANICAL DETAILS. ENSURE VENT LOCATION DOES NOT CLASH WITH ACCESS HATCH OPENING. VENT PIPE IS TO BE OF CORROSIVE RESISTANT CONSTRUCTION. PROVIDE REPLACEABLE STAINLESS STEEL INSECT SCREEN OVER VENT INLET/OUTLET.

NO	DATE	REVISION	APP.





SCALE: 1/4" = 1'-0"

RPS
A TETRA TECH COMPANY
Texas PE Firm Reg. #F-929
575 N. Dairy Ashford, Suite 700,
Houston, Texas 77079
T +1 281 589 7257
E usinfrastructure@rpsgroup.com

SURVEYED BY: KUO INC.
FB NO. F-4578

This document is released for the purposes of interim review only under the authority of:

Luke Ramirez, P.E.
Texas P.E. No. 128371
2/16/26

It is not to be used for bidding, construction, or permitting purposes.

CITY OF HOUSTON

HOUSTON PUBLIC WORKS

RECONSTRUCTION & REHABILITATION
COH LIFT STATIONS

SHADY MAPLES LS MECHANICAL PLANS
AND SECTION

SM-M-1

WBS NUMBER	FOR CITY OF HOUSTON USE ONLY
R-000267-0178-3	
DRAWING SCALE	
AS NOTED	
CITY OF HOUSTON PM	
TAHA LOTIA	
SHEET NO. 76 OF 268	

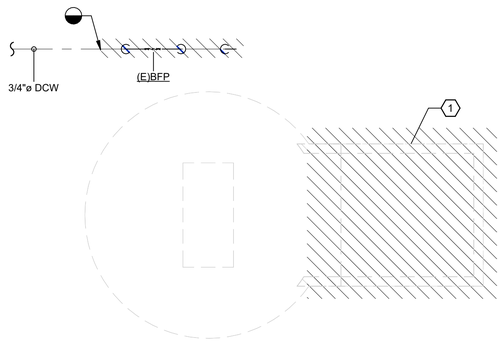

SHADY MAPLE LIFT STATION PLUMBING DEMOLITION PLAN

SCALE: 1/4" = 1'-0"



A SM-P-1 SHADY MAPLE LIFT STATION PLUMBING DEMOLITION PHOTO

SCALE: N.T.S.

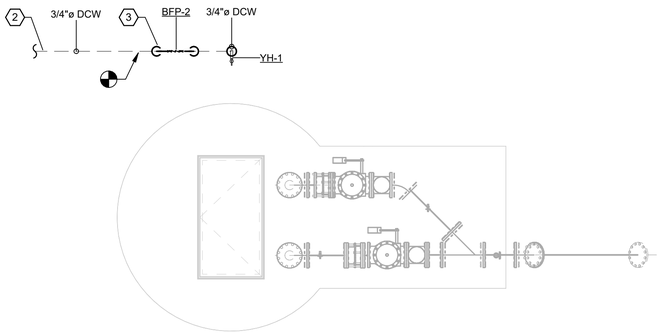

SHADY MAPLE LIFT STATION PLUMBING NEW WORK

SCALE: 1/4" = 1'-0"

KEYNOTE

1. VALVE VAULT TO BE DEMOLISHED, WET WELL TO REMAIN. REFER TO STRUCTURAL DRAWINGS.
2. REFER TO CIVIL PLANS FOR YARD PIPING CONTINUATION.
3. PROVIDE DOMESTIC COLD WATER SERVICE PIPING TO LIFT STATION SITE. COORDINATE WITH CIVIL FOR SERVICE CONNECTION TO WATER MAIN. TRANSITION PIPING TO ABOVE GRADE REDUCED PRESSURE ZONE BACKFLOW PREVENTER. COORDINATE WITH LOCAL UTILITY TO PROVIDE NEW WATER METER. PROVIDE VANDAL-PROOF, INSULATED ENCLOSURE FOR BACKFLOW PREVENTER.
4. PROVIDE NATURAL GAS SERVICE PIPING TO LIFT STATION SITE. COORDINATE WITH LOCAL UTILITY FOR NATURAL GAS SERVICE CONNECTION TO MAIN. CONTRACTOR TO COORDINATE WITH LOCAL UTILITY TO PROVIDE NEW NATURAL GAS METER AND PRESSURE REDUCING VALVE FOR SERVICE.
5. REFER TO ELECTRICAL DRAWINGS AND GENERATOR MANUFACTURER SPECIFICATIONS FOR FINAL NATURAL GAS PIPING CONNECTION LOCATION. PROVIDE SHUT OFF VALVE FOR ISOLATION AND FLEXIBLE CONNECTION AT GENERATOR.

NO	DATE	REVISION	APP.

A TETRA TECH COMPANY
Texas PE Firm Reg. #F-929
575 N. Dairy Ashford, Suite 700,
Houston, Texas 77079
T +1 281 589 7257
E usinfrastructure@rpsgroup.com

SURVEYED BY: KUO INC.
FB NO. F-4578

This document is released for the purposes of interim review only under the authority of:

Luke Ramirez, P.E.
Texas P.E. No. 128371
2/16/26

It is not to be used for bidding, construction, or permitting purposes.

CITY OF HOUSTON

HOUSTON PUBLIC WORKS

RECONSTRUCTION & REHABILITATION
COH LIFT STATIONS

SHADY MAPLES LS PLUMBING PLANS

SM-P-1

WBS NUMBER
R-000267-0178-3
DRAWING SCALE
AS NOTED
CITY OF HOUSTON PM
TAHA LOTIA
SHEET NO. 77 OF 268

FOR CITY OF HOUSTON USE ONLY

4' 0' 4' 8'

SCALE: 1/4" = 1'-0"

PLOTTED: 3/27/2026 9:39:42 AM
PLOT STYLE:
Autodesk Docs://200-317106-24001 COH LS Rehab Design/M-LIFT STATIONS-200-317106-24001_v25.rvt

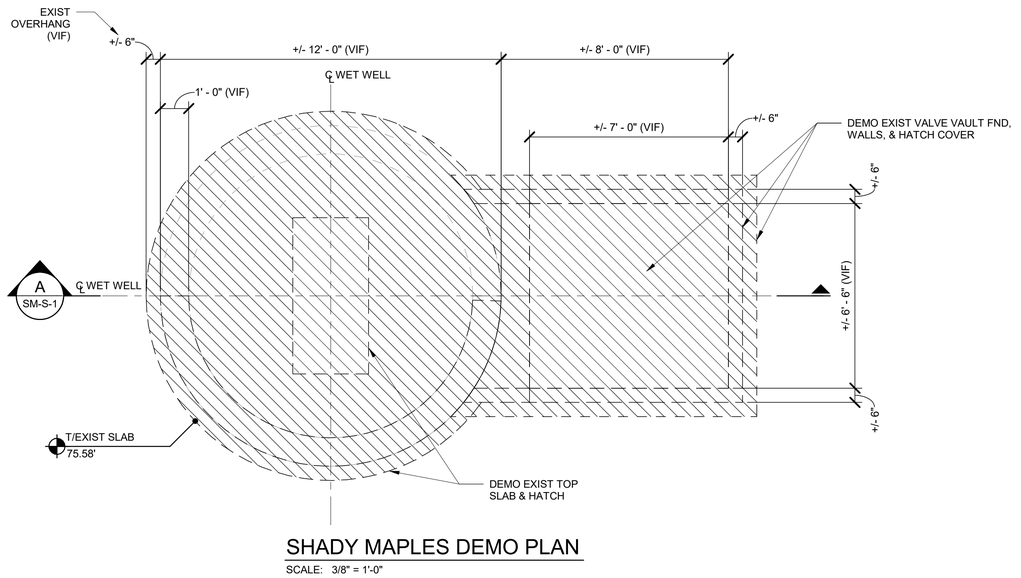

SHADY MAPLES DEMO PLAN

SCALE: 3/8" = 1'-0"

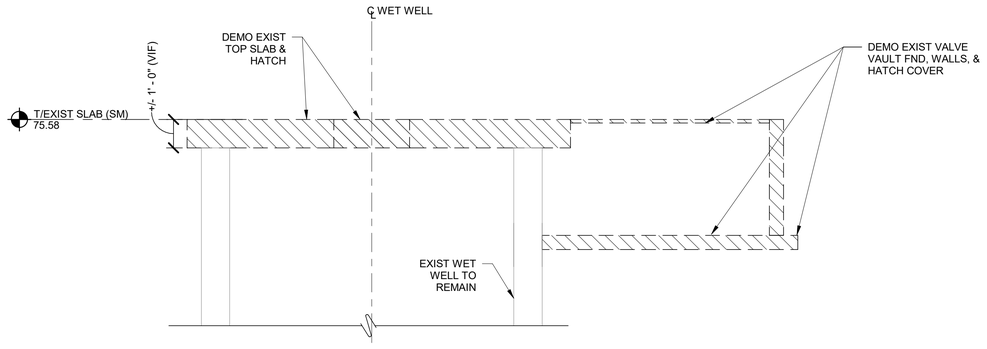

A DEMO SECTION

A / SM-S-1 SCALE: 3/8" = 1'-0"

PLAN NOTES:

1. SEE SHEETS S-1 THROUGH S-2 FOR GENERAL NOTES AND DESIGN CRITERIA.
2. REFER TO CIVIL FOR STRUCTURE LOCATION, FINAL ELEVATIONS, AND ORIENTATION ON SITE.
3. VERIFY ALL EXISTING DIMENSIONS AND ELEVATIONS IN THE FIELD PRIOR TO CONSTRUCTION.
4. WHERE SHOWN, EXISTING CENTERLINES ARE SHOWN FOR REFERENCE. CONTRACTOR IS RESPONSIBLE FOR COORDINATING LOCATION OF NEW PUMPS, FOUNDATIONS, AND PEDESTALS WITH OTHER DISCIPLINES.

LEGEND:

- DENOTES AREAS OF SELECT DEMOLITION

NO.	DATE	REVISION	APP.

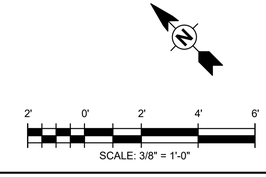

SCALE: 3/8" = 1'-0"

RPS
A TETRA TECH COMPANY
Texas PE Firm Reg. #F-929
575 N. Dairy Ashford, Suite 700,
Houston, Texas 77079
T +1 281 589 7257
E usinfrastructure@rpsgroup.com

SURVEYED BY: KUO Inc.
FB NO. F-4578

This document is released for the purposes of interim review only under the authority of:

Phillip A. Fleming, P.E.
Texas P.E. No. 131982
2/10/26

It is not to be used for bidding, construction, or permitting purposes.

CITY OF HOUSTON

HOUSTON PUBLIC WORKS

RECONSTRUCTION & REHABILITATION
COH LIFT STATIONS

SHADY MAPLES LS STRUCTURAL
DEMOLITION PLAN AND SECTION

SM-S-1

WBS NUMBER	FOR CITY OF HOUSTON USE ONLY
R-000267-0178-3	
DRAWING SCALE	
AS NOTED	
CITY OF HOUSTON PM	
TAHA LOTIA	
SHEET NO. 78 OF 268	

PLOTTED 3/30/2026 10:01:20 AM
PLOT STYLE:
Autodesk Docs://200-317106-24001 COH LS Rehab Design/S-LIFT STATIONS-200-317106-24001_v25.rvt

PLOTTED 3/30/2026 10:01:20 AM
PLOT STYLE:
Autodesk Docs://200-317106-24001 COH LS Rehab Design/S-LIFT STATIONS-200-317106-24001_v25.rvt

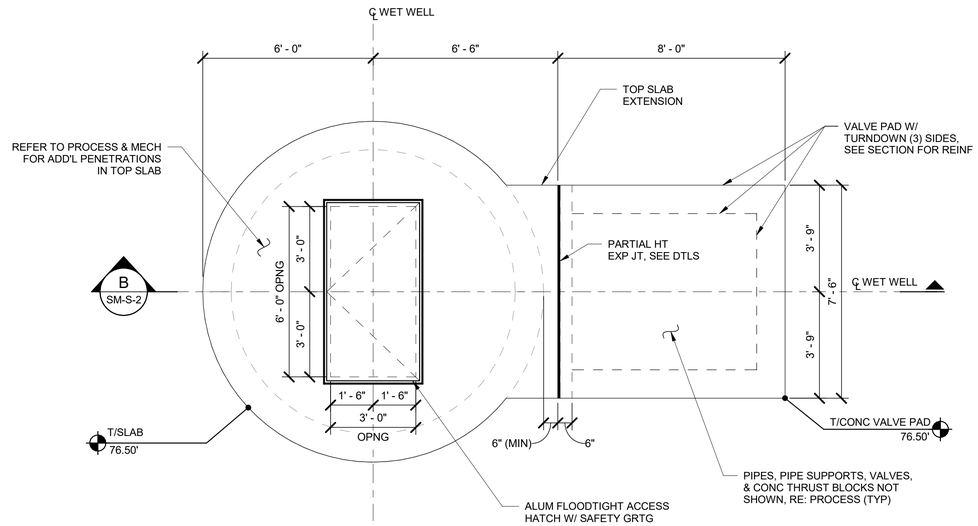

SHADY MAPLES TOP SLAB PLAN

SCALE: 3/8" = 1'-0"

PLAN NOTES:

1. SEE SHEETS S-1 THROUGH S-2 FOR GENERAL NOTES AND DESIGN CRITERIA.
2. REFER TO CIVIL FOR STRUCTURE LOCATION, FINAL ELEVATIONS, AND ORIENTATION ON SITE.
3. COORDINATE ALL PIPE LOCATIONS, PENETRATIONS, AND ELEVATIONS WITH PROCESS AND CIVIL DRAWINGS.
4. PROVIDE ADDITIONAL REINFORCEMENT AROUND CONCRETE OPENINGS PER TYPICAL DETAIL 1 / STD-S-1
5. VERIFY ALL EXISTING DIMENSIONS AND ELEVATIONS IN THE FIELD PRIOR TO CONSTRUCTION.
6. WHERE SHOWN, EXISTING CENTERLINES ARE SHOWN FOR REFERENCE. CONTRACTOR IS RESPONSIBLE FOR COORDINATING LOCATION OF NEW PUMPS, FOUNDATIONS, AND PEDESTALS WITH OTHER DISCIPLINES.
7. ALUMINUM ACCESS HATCHES SHALL BE FLOODTIGHT, RATED FOR 625 PSF MINIMUM UNIFORM LIVE LOAD (10 FT HEAD OF WATER), AND INCLUDE SAFETY GRATING. CONTRACTOR SHALL CONFIRM SIZE AND LOCATION OF ACCESS HATCH OPENINGS ACCORDING TO THE SELECTED HATCH AND PUMP MANUFACTURERS' REQUIREMENTS. REFER TO SPEC "08310 - ACCESS HATCHES" FOR ADDITIONAL REQUIREMENTS.

NO	DATE	REVISION	APP.

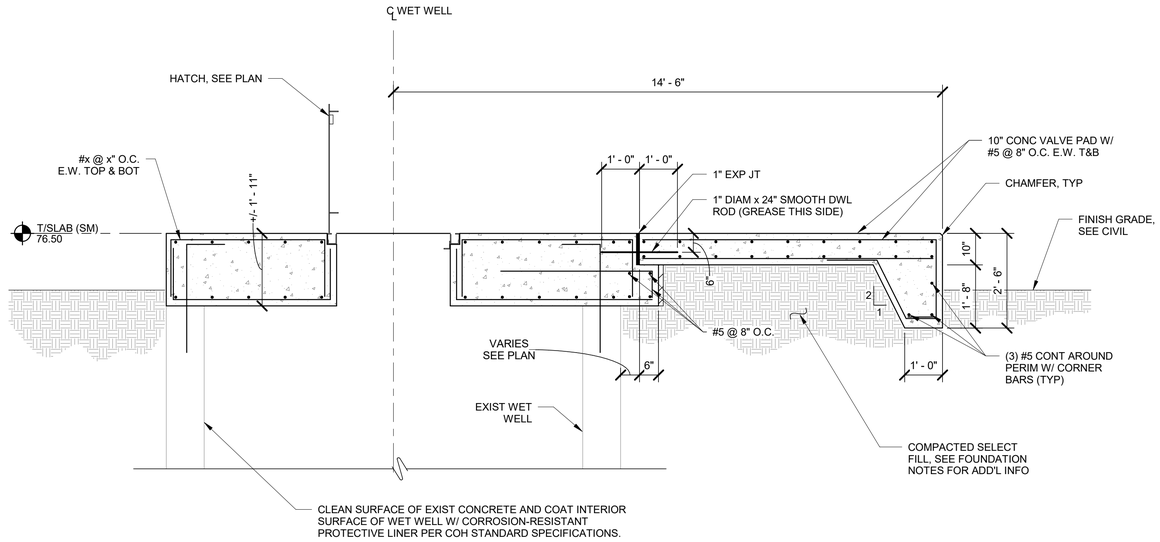

B SECTION

SM-S-2 SCALE: 1/2" = 1'-0"

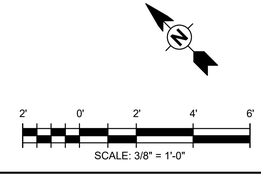

RPS
A TETRA TECH COMPANY
Texas PE Firm Reg. #F-929
575 N. Dairy Ashford, Suite 700,
Houston, Texas 77079
T +1 281 589 7257
E usinfrastructure@rpsgroup.com

SURVEYED BY: KUO Inc.
FB NO. F-4578

This document is released for the purposes of interim review only under the authority of:

Phillip A. Fleming, P.E.
Texas P.E. No. 131982
2/10/26

It is not to be used for bidding, construction, or permitting purposes.

CITY OF HOUSTON

HOUSTON PUBLIC WORKS

RECONSTRUCTION & REHABILITATION
COH LIFT STATIONS

SHADY MAPLES LS STRUCTURAL PLAN AND SECTIONS

SM-S-2

WBS NUMBER	FOR CITY OF HOUSTON USE ONLY
R-000267-0178-3	
DRAWING SCALE	
AS NOTED	
CITY OF HOUSTON PM	
TAHA LOTIA	
SHEET NO. 79 OF 268	

PLOTTED: 3/27/2026 1:07:06 PM
PLOT STYLE:
Autodesk Docs://200-317106-24001 COH LS Rehab Design/D-LIFT STATIONS-200-317106-24001_v25.rvt

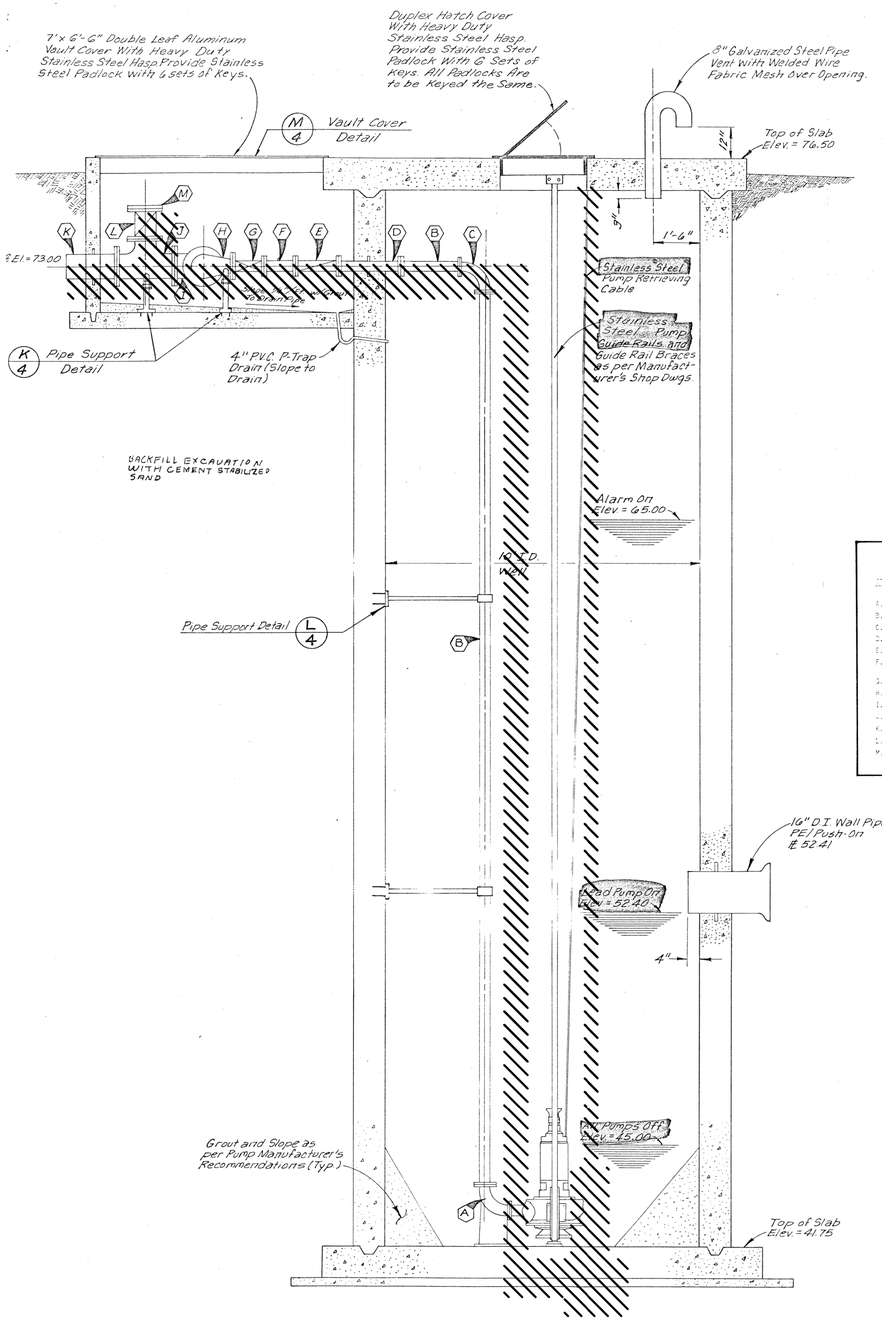

H EQUIPMENT AND PIPING SECTION
SCALE: 1/2" = 1'-0"

PIPE & FITTING SCHEDULE

ITEM	DESCRIPTION	NO. REQ'D
A.	6" x 6" - 90° Reducing Elbow, C.I.	2
B.	6" Sleeve, F.F., C.I.	4
C.	6" x 3'-0" Short Spigot Sleeve, F.F., C.I.	2
D.	6" Wall Sleeve, F.F., C.I.	2
E.	6" Sluice Gate, Stem Guide, F.F., C.I.	2
F.	6" Check Valve, Swing Type, Horizontal, F.F., C.I.	1
G.	6" Mechanical Joint Sleeve	2
H.	6" x 6" - 90° Reducing Elbow, F.F., C.I.	1
I.	10" Wall Pipe, F.F., C.I.	1
J.	10" x 6" Tee, Flanged, F.F., C.I.	1
K.	10" Wall Pipe, F.F., C.I.	1
L.	6" Expansion Joint, Flanged and Restrained, F.F.	1
M.	6" Check Flange, C.I.	1

PUMP DATA

SIZE	CAPACITY (GPM)	TDH = 41.75' (GPM)	TDH = 52.40' (GPM)	TDH = 65.00' (GPM)
4"	1,150	1,325	1,200	1,050
4"	1,425	1,625	1,500	1,325
4"	1,700	1,900	1,775	1,600
4"	1,975	2,175	2,050	1,875
4"	2,250	2,450	2,325	2,150
4"	2,525	2,725	2,600	2,425
4"	2,800	3,000	2,875	2,700
4"	3,075	3,275	3,150	2,975
4"	3,350	3,550	3,425	3,250
4"	3,625	3,825	3,700	3,525
4"	3,900	4,100	3,975	3,800

SIZE	CAPACITY (GPM)	TDH = 41.75' (GPM)	TDH = 52.40' (GPM)	TDH = 65.00' (GPM)
6"	2,350	2,675	2,500	2,275
6"	2,900	3,225	3,050	2,825
6"	3,450	3,775	3,600	3,375
6"	4,000	4,325	4,150	3,925
6"	4,550	4,875	4,700	4,475
6"	5,100	5,425	5,250	5,025
6"	5,650	5,975	5,800	5,575
6"	6,200	6,525	6,350	6,125
6"	6,750	7,075	6,900	6,675
6"	7,300	7,625	7,450	7,225
6"	7,850	8,175	8,000	7,775

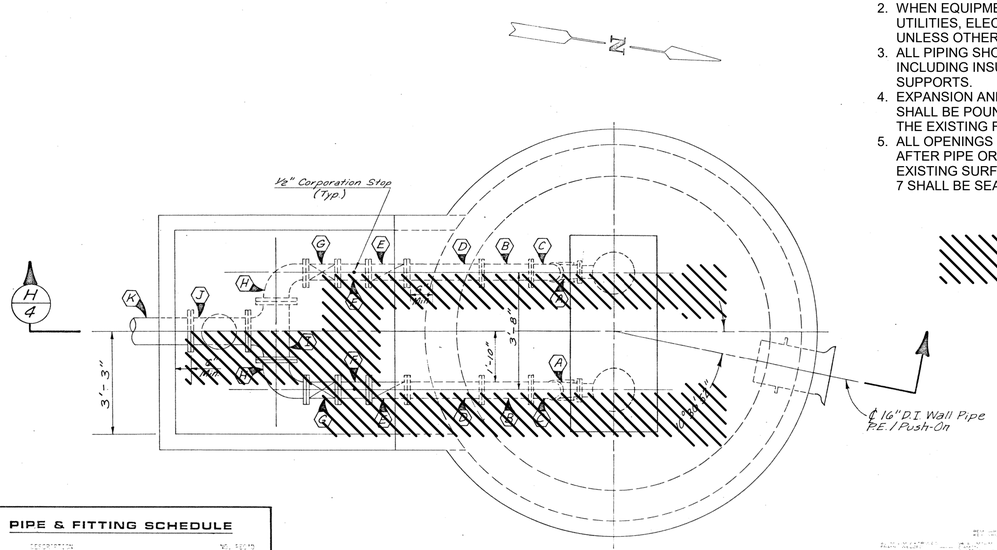

J EQUIPMENT AND PIPING PLAN
SCALE: 1/2" = 1'-0"

DEMOLITION NOTES:
1. CONTRACTORS TO REMOVE AND SALVAGE ALL EXISTING PUMPS, VALVES, AND APPURTENANCES.
2. WHEN EQUIPMENT ITEMS ARE INDICATED FOR REMOVAL, ALL ANCILLARY UTILITIES, ELECTRICAL ITEMS, AND SUPPORTS SHALL BE COMPLETELY REMOVED UNLESS OTHERWISE INDICATED.
3. ALL PIPING SHOWN AS BEING REMOVED SHALL BE COMPLETELY REMOVED INCLUDING INSULATION, HANGERS, EXPANSION AND ANCHOR BOLTS, AND PIPE SUPPORTS.
4. EXPANSION AND ANCHOR BOLES REMAINING IN WALL, CEILINGS, OR FLOORS SHALL BE POUNDED OR CUT FLUSH WITH THE SURFACE AND PATCHED TO MATCH THE EXISTING FINISH.
5. ALL OPENINGS REMAINING IN FLOORS, WALLS, OR CEILINGS, INCLUDING SLEEVES, AFTER PIPE OR CONDUIT DEMOLITION SHALL BE PATCHED TO MATCH THE EXISTING SURFACE. PENETRATIONS BETWEEN AREAS LABELED NEMA 4 AND NEMA 7 SHALL BE SEALED GAS TIGHT.

-ITEMS TO BE REMOVED

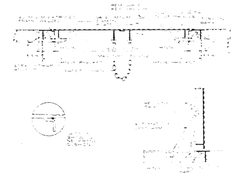

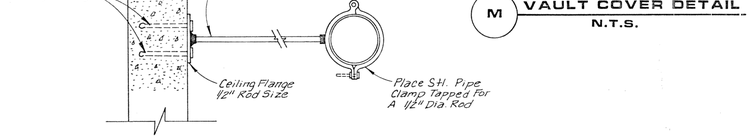

M VAULT COVER DETAIL
N.T.S.

L PIPE SUPPORT DETAIL
NOT TO SCALE

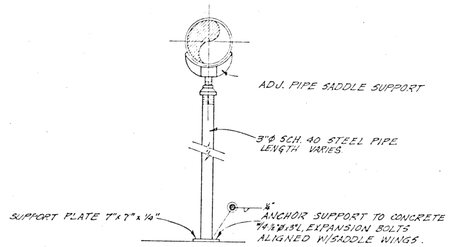

K PIPE SUPPORT DETAIL
NOT TO SCALE

33600

8' 0' 8' 16'
SCALE: 1/8" = 1'-0"

NO.	DATE	REVISION	APP.

RPS A TETRA TECH COMPANY
Texas PE Firm Reg. #F-929
575 N. Dairy Ashford, Suite 700, Houston, Texas 77079
T +1 281 589 7257
E usinfrastructure@rpsgroup.com

SURVEYED BY: KUCO INC.
FB NO. F-4578

This document is released for the purposes of interim review only under the authority of:
Jeremy Austin, P.E.
Texas P.E. No. 116816
03/30/2026
It is not to be used for bidding, construction, or permitting purposes.

CITY OF HOUSTON
HOUSTON PUBLIC WORKS

RECONSTRUCTION & REHABILITATION
COH LIFT STATIONS

SHADY MAPLE LS DEMOLITION PLAN

SM-D-1

WBS NUMBER	FOR CITY OF HOUSTON USE ONLY
R-000267-00178-3	
DRAWING SCALE	
AS NOTED	
CITY OF HOUSTON PM	
TAHA LOTIA	
SHEET NO. 80 OF 268	

NOTES:

1. SEE DETAIL AND STRUCTURAL DRAWINGS FOR DIMENSIONS AND INFORMATION NOT SHOW.
2. ALL PIPING TO BE FLANGED, NO FLANGED COUPLING ADAPTERS OR VICTAULIC STYLE COUPLINGS PERMITTED.
3. DIMENSIONS NOTED ARE RELATIVE TO THE PUMP SIZE AND MANUFACTURER SELECTED. CONTRACTOR SHALL VERIFY SIZE AND LOCATION OF HATCHES WITH PUMP MANUFACTURER.
4. INSTALL PLUG VALVES TO OPEN UPWARD AND CLOSE TO A SEATED POSITION.
5. INSTALL CHECK VALVES SO THAT THE WEIGHT LEVER POSITION IS APPROXIMATELY 45 DEGREES BELOW THE VALVE HORIZONTAL CENTER LINE IN THE CLOSED POSITION; AND APPROXIMATELY 45 DEGREES ABOVE THE VALVE HORIZONTAL CENTER LINE IN THE FULL OPEN POSITION.
6. LABEL HATCHES WITH THE CORRESPONDING PUMP NUMBER USING A 12-INCH BY 12-INCH 316SS PLATE ENGRAVED WITH 6-INCH LETTERING WELDED TO THE HATCH.
7. PUMP BASIS OF DESIGN IS FLYGT NP 3301 HT ~ WITH 330 MM DIAMETER IMPELLER

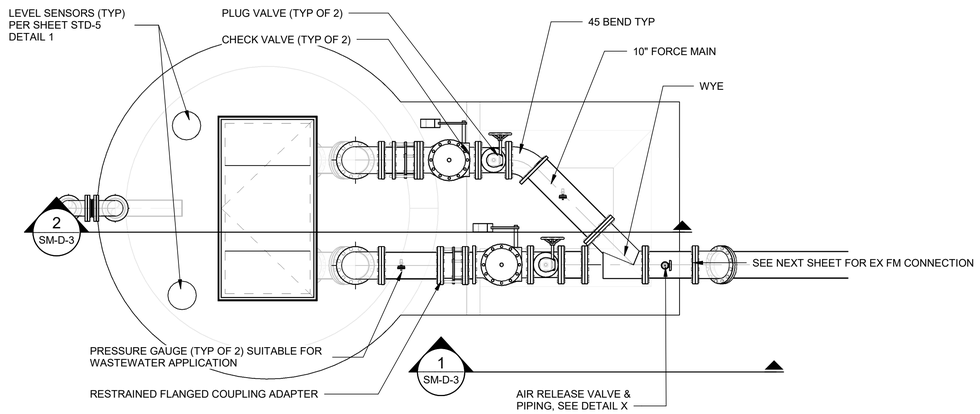

1 SHADY MAPLE PLAN VIEW
SCALE: 3/8" = 1'-0"

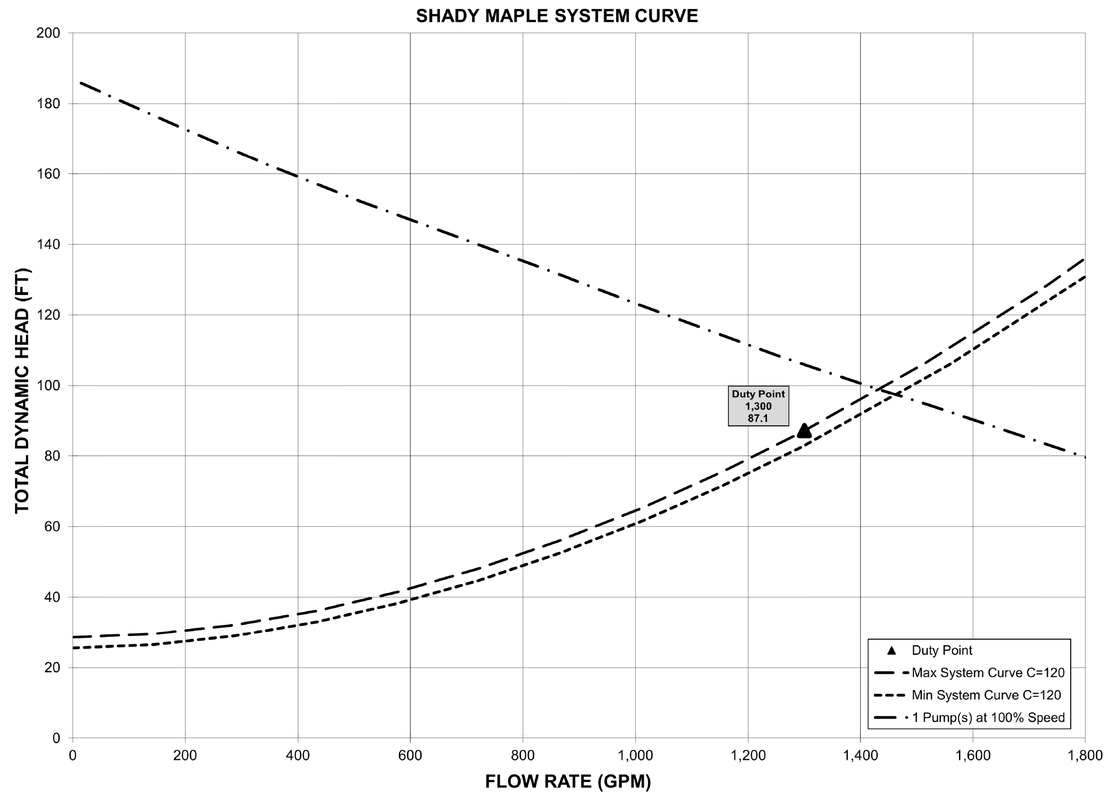

NO.	DATE	REVISION	APP.

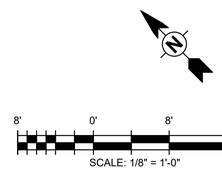

A TETRA TECH COMPANY
Texas PE Firm Reg. #F-929
575 N. Dairy Ashford, Suite 700,
Houston, Texas 77079
T +1 281 589 7257
E usinfrastructure@rpsgroup.com

This document is released for the purposes of interim review only under the authority of:

Jeremy Austin, P.E.
Texas P.E. No. 116816
03/30/2026

It is not to be used for bidding, construction, or permitting purposes.

SURVEYED BY: KUCO INC.
FB NO. F-4578

CITY OF HOUSTON

HOUSTON PUBLIC WORKS

RECONSTRUCTION & REHABILITATION
COH LIFT STATIONS

Shady Maple LS Plan

SM-D-2

WBS NUMBER	FOR CITY OF HOUSTON USE ONLY
R-000267-00178-3	
DRAWING SCALE	
AS NOTED	
CITY OF HOUSTON PM	
TAHA LOTIA	
SHEET NO. 81 OF 268	

PLOTTED: 3/27/2026 1:07:08 PM
PLOT STYLE:
Autodesk Docs://200-317106-24001 COH LS Rehab Design/D-LIFT STATIONS-200-317106-24001_v25.rvt

NOTES:
1. SEE DETAIL AND STRUCTURAL DRAWINGS FOR DIMENSIONS AND INFORMATION NOT SHOW.
2. ALL PIPING TO BE FLANGED, NO FLANGED COUPLING ADAPTERS OR VICTAULIC STYLE COUPLINGS PERMITTED.
3. DIMENSIONS NOTED ARE RELATIVE TO THE PUMP SIZE AND MANUFACTURER SELECTED. CONTRACTOR SHALL VERIFY SIZE AND LOCATION OF HATCHED WITH PUMP MANUFACTURER.
4. INSTALL PLUG VALVES TO OPEN UPWARD AND CLOSE TO A SEATED POSITION.
5. INSTALL CHECK VALVES SO THAT THE WEIGHT LEVER POSITION IS APPROXIMATELY 45 DEGREES BELOW THE VALVE HORIZONTAL CENTER LINE IN THE CLOSED POSITION; AND APPROXIMATELY 45 DEGREES ABOVE THE VALVE HORIZONTAL CENTER LINE IN THE FULL OPEN POSITION.
6. LABEL HATCHES WITH THE CORRESPONDING PUMP NUMBER USING A 12-INCH BY 12-INCH 316SS PLATE ENGRAVED WITH 6-INCH LETTERING WELDED TO THE HATCH.

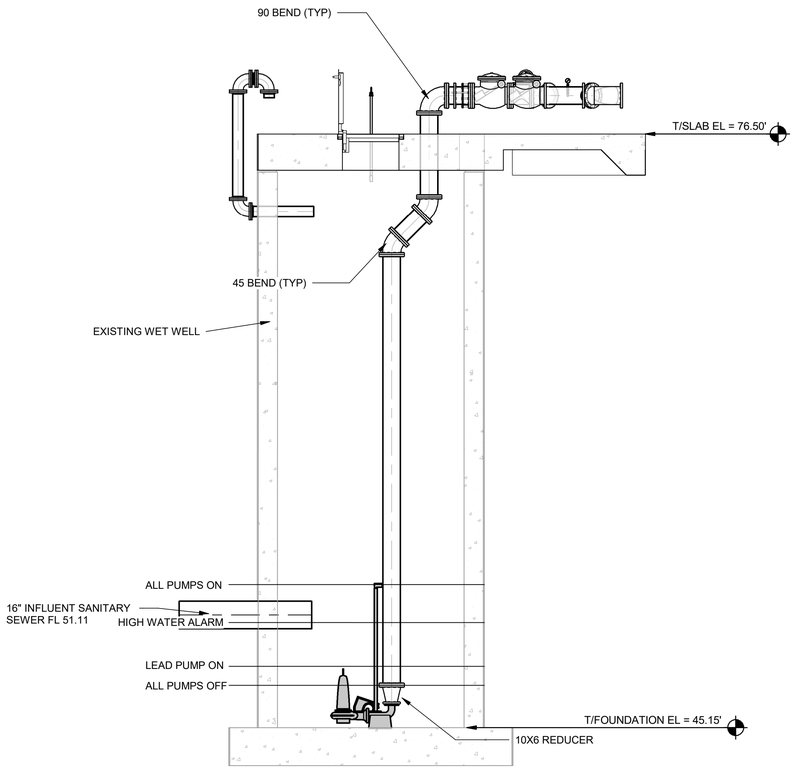

SHADY MAPLE SECTION VIEW
SCALE: 1/4" = 1'-0"

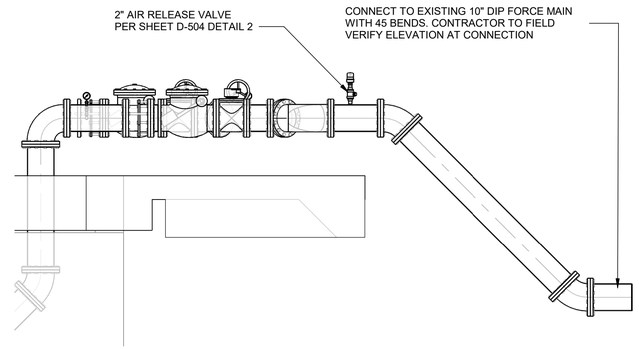

SHADY MAPLE SECTION
SCALE: 3/8" = 1'-0"

PUMP DATA TABLE

PUMP CHARACTERISTICS	PUMP NO. 1	PUMP NO. 2
MOTOR DATA		
NOMINAL SIZE (HP)	85	85
MAX SPEED (RPM)	1775	1775
SOLIDS PASSAGE		
MIN SPHERE (IN)	3.94	3.94
CAPACITY (GPM)		
DESIGN	1300	1300
RUNOUT	2,407.64	2,407.64
DISCHARGE HEAD (FT)		
DESIGN	99.17	99.17
RUNOUT	42.31	42.31
SHUTOFF	185.82	185.82
EFFICIENCY (%)		
DESIGN	68.27	68.27
NPSHR (FT)		
DESIGN	18.19	18.19
RUNOUT	49.11	49.11
PUMP CYCLE TIME	6	6
CUMULATIVE CAPACITY (GPM)	1427.8	1427.8

RISING LEVEL CYCLE			
WATER LEVEL DEPTH	WATER LEVEL ELEVATION	ACTION	PUMP(S) IN OPERATION
2.25	47.40	PUMPS OFF LEVEL - NO ACTION	ALL PUMPS OFF
3.25	48.40	LEAD PUMP TURNS ON	LEAD PUMP ON
5.56	50.71	HIGH WATER LEVEL ALARM ON	HIGH WATER ALARM SOUND
7.56	52.71	HIGH HIGH WATER LEVEL ALARM (FLOAT ON LEVEL)	ALL PUMPS ON (FLOATS)
FALLING LEVEL CYCLE			
WATER LEVEL DEPTH	WATER LEVEL ELEVATION	ACTION	PUMP(S) IN OPERATION
7.56	52.71	FLOAT OFF LEVEL	ALL PUMPS OFF (FLOATS)
5.56	50.71	HIGH WATER LEVEL ALARM OFF	LEAD PUMP ON
3.25	48.40	LEAD PUMP TURNS ON	ALL PUMPS STOPPED - STANDBY PUMP SWITCHES TO
1.95	47.10	LOW LEVEL ALARM	-

8' 0' 8' 16'
SCALE: 1/8" = 1'-0"

NO.	DATE	REVISION	APP.

rps A TETRA TECH COMPANY
Texas PE Firm Reg. #F-929
575 N. Dairy Ashford, Suite 700, Houston, Texas 77079
T +1 281 589 7257
E usinfrastructure@rpsgroup.com

SURVEYED BY: KUCO INC.
FB NO. F-4578

This document is released for the purposes of interim review only under the authority of:

Jeremy Austin, P.E.
Texas P.E. No. 116816
03/30/2026

It is not to be used for bidding, construction, or permitting purposes.

CITY OF HOUSTON
HOUSTON PUBLIC WORKS

RECONSTRUCTION & REHABILITATION
COH LIFT STATIONS

SHADY MAPLE LS SECTIONS

SM-D-3

WBS NUMBER	FOR CITY OF HOUSTON USE ONLY
R-000267-00178-3	
DRAWING SCALE	
AS NOTED	
CITY OF HOUSTON PM	
TAHA LOTIA	
SHEET NO. 82 OF 268	

PLOTTED: 3/27/2026 1:07:11 PM
PLOT STYLE:
Autodesk Docs://200-317106-24001 COH LS Rehab Design/D-LIFT STATIONS-200-317106-24001_v25.rvt



SHADY MAPLES ELECTRICAL DEMOLITION SITE

PLAN

1/4"= 1'-0"



EXISTING SERVICE PANEL AND WIMAX BOX

PHOTOGRAPH A

NTS -



EXISTING WIMAX POLE

PHOTOGRAPH B

NTS -



EXISTING WIREWAY, PUMP CONTROL PANEL, & PLC CONTROL PANEL

PHOTOGRAPH C

NTS -



EXISTING RADAR LEVEL TRASMITTERS LT-1 & LT-2 & ASSOCIATED CONDUITS

PHOTOGRAPH D

NTS -

NOTES BY SYMBOL "⟨#⟩":

1. EXISTING SERVICE & WIMAX BOX AND ASSOCIATED CONDUITS, WIRE, TO BE DEMOLISHED AND REMOVED.
2. EXISTING WIMAX POLE AND ASSOCIATED CONDUITS, WIRE, TO BE DEMOLISHED AND REMOVED.
3. EXISTING WIREWAY, PUMP CONTROL PANEL, & PLC CONTROL PANEL AND ASSOCIATED CONDUITS, WIRE, TO BE DEMOLISHED AND REMOVED.
4. EXISTING RADAR LEVEL TRANSMITTERS LT-1 & LT-2, AND ASSOCIATED CONDUITS, WIRE TO BE DEMOLISHED AND REMOVED.

NO.	DATE	REVISION	APP.
	MM/DD/YY	BRIEF DESCRIPTION	XXX
	MM/DD/YY	BRIEF DESCRIPTION	XXX
	MM/DD/YY	BRIEF DESCRIPTION	XXX

RPS
A TETRA TECH COMPANY
Texas PE Firm Reg. #F-929
575 N. Dairy Ashford, Suite 700,
Houston, Texas 77079
T +1 281 589 7257
E usinfrastructure@rpsgroup.com

SURVEYED BY:
FB NO. F-4578

FOR INTERIM REVIEW ONLY NOT INTENDED FOR PERMIT, BIDDING OR CONSTRUCTION PURPOSES.
ENGINEER:
HOSS FOROUZAN
P.E. SERIAL NO.77748
03/30/2026

CITY OF HOUSTON
HOUSTON PUBLIC WORKS

RECONSTRUCTION & REHABILITATION
COH LIFT STATIONS

SHADY MAPLES LIFT STATION ELECTRICAL DEMOLITION SITE PLAN

WBS NUMBER	FOR CITY OF HOUSTON USE ONLY
R-000267-00178-3	
DRAWING SCALE	
AS NOTED	
CITY OF HOUSTON PM	
TAHA LOTIA	
SHEET NO. 83 OF 268	

SM-E-1

PLOTTED: 3/26/2026 6:05 PM

FILE PATH: O:\H8109_Lift Station Rehabilitation And Reconstruction (Tetratech)\6 Drawings\Electrical\Working\Shady Maples\Shady Maples_E-PLAN.dwg STYLE: COH.ctb

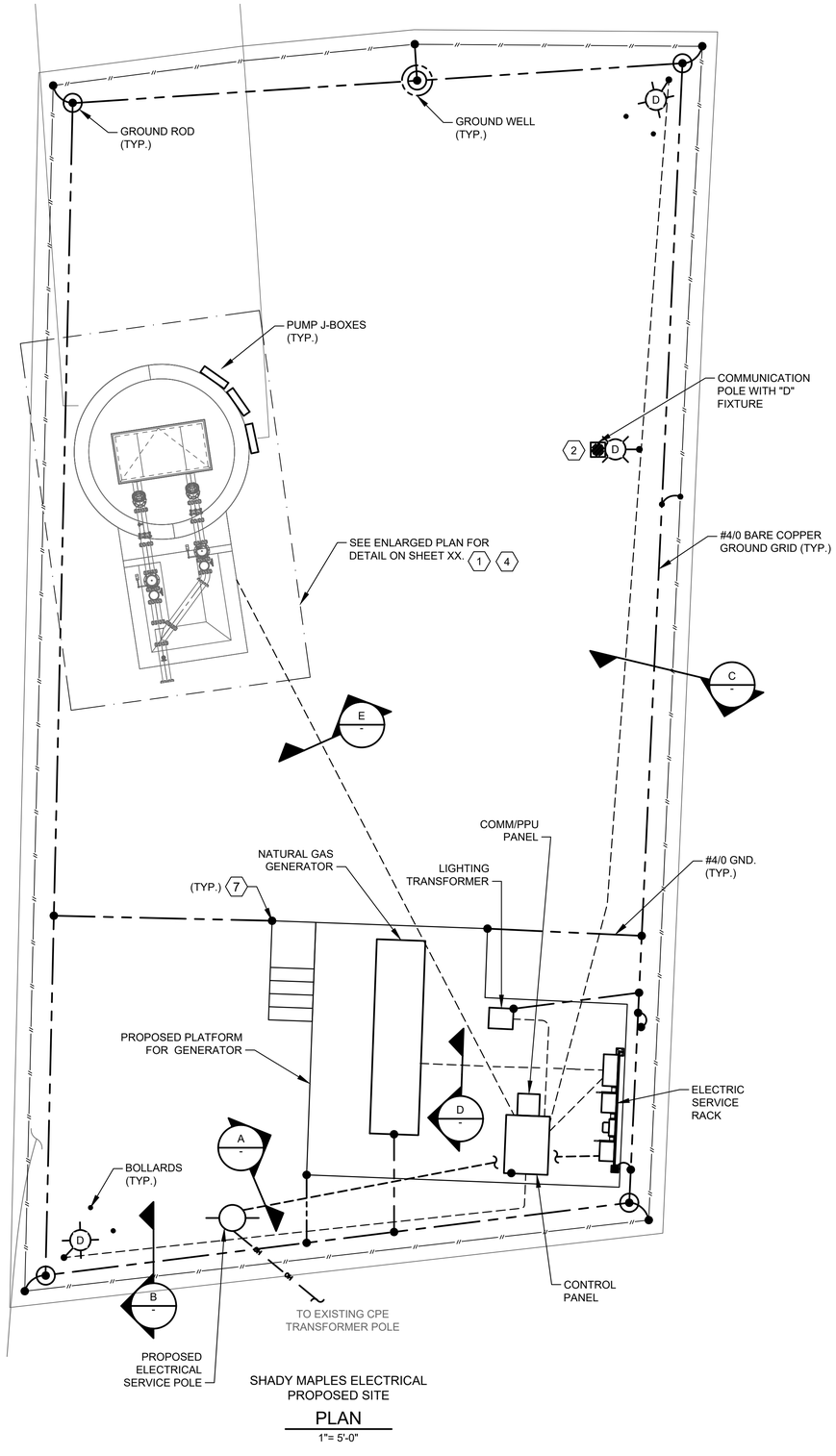

SHADY MAPLES ELECTRICAL
PROPOSED SITE

PLAN

1"= 5'-0"

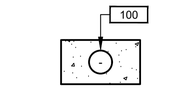

DUCTBANK

SECTION A

NTS

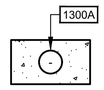

DUCTBANK

SECTION B

NTS

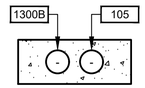

DUCTBANK

SECTION C

NTS

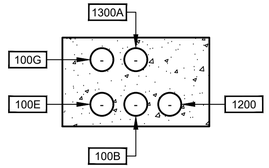

DUCTBANK

SECTION D

NTS

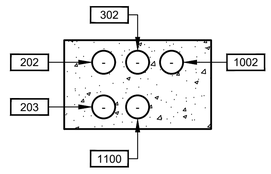

DUCTBANK

SECTION E

NTS

NO.	DATE	REVISION	APP.
	MM/DD/YY	BRIEF DESCRIPTION	XXX
	MM/DD/YY	BRIEF DESCRIPTION	XXX
	MM/DD/YY	BRIEF DESCRIPTION	XXX

RPS A TETRA TECH COMPANY
Texas PE Firm Reg. #F-929
575 N. Dairy Ashford, Suite 700,
Houston, Texas 77079
T +1 281 589 7257
E usinfrastructure@rpsgroup.com

SURVEYED BY:
FB NO. F-4578

FOR INTERIM REVIEW ONLY NOT INTENDED FOR PERMIT, BIDDING OR CONSTRUCTION PURPOSES.
ENGINEER:
HOSS FOROUZAN
P.E. SERIAL NO.77748
03/30/2026

CITY OF HOUSTON
HOUSTON PUBLIC WORKS

RECONSTRUCTION & REHABILITATION
COH LIFT STATIONS

SHADY MAPLES LIFT STATION ELECTRICAL PROPOSED SITE PLAN

WBS NUMBER	FOR CITY OF HOUSTON USE ONLY
R-000267-00178-3	
DRAWING SCALE	
AS NOTED	
CITY OF HOUSTON PM	
TAHA LOTIA	
SHEET NO. 84 OF 268	

SM-E-2

FILE PATH: O:\H8109_Lift Station Rehabilitation And Reconstruction (Tetratech)\6 Drawings\Electrical\Working\Shady Maples\Shady Maples_E-02.dwg
PLOTTED: 3/27/2026 11:37 AM
STYLE: GAI.ctb

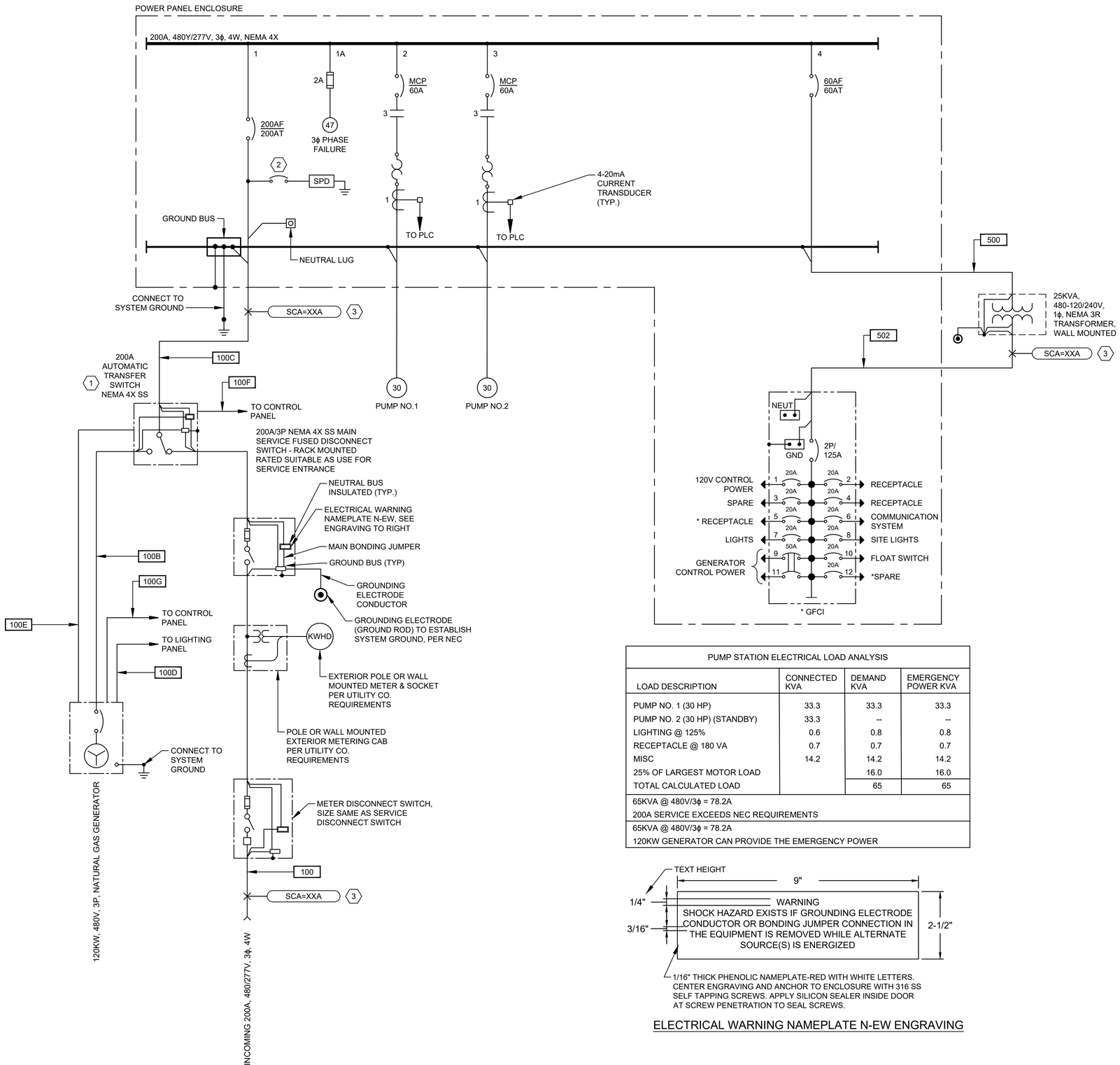

PUMP STATION ELECTRICAL LOAD ANALYSIS			
LOAD DESCRIPTION	CONNECTED KVA	DEMAND KVA	EMERGENCY POWER KVA
PUMP NO. 1 (30 HP)	33.3	33.3	33.3
PUMP NO. 2 (30 HP) (STANDBY)	33.3	--	--
LIGHTING @ 125%	0.6	0.8	0.8
RECEPTACLE @ 180 VA	0.7	0.7	0.7
MISC	14.2	14.2	14.2
25% OF LARGEST MOTOR LOAD		16.0	16.0
TOTAL CALCULATED LOAD		65	65
65KVA @ 480V/3ϕ = 78.2A 200A SERVICE EXCEEDS NEC REQUIREMENTS			
65KVA @ 480V/3ϕ = 78.2A 120KW GENERATOR CAN PROVIDE THE EMERGENCY POWER			

ELECTRICAL WARNING NAMEPLATE N-EW ENGRAVING

NOTES BY SYMBOL "(#)":

1. PROVIDE A NORMALLY OPEN (NO) AUXILIARY CONTACT ON BOTH ON POSITIONS.
2. PROVIDE BREAKER ACCORDING TO MANUFACTURER'S REQUIREMENTS.
3. POINT TO POINT METHOD IS USED FOR SHORT CIRCUIT CURRENT CALCULATION.
4. CONTRACTOR SHALL PROVIDE A PERMANENTLY AFFIXED LABEL (2' X 3") SHOWING THE AVAILABLE FAULT CURRENT AND CALCULATION DATE. THE LABEL SHALL BE BLUE LETTERING ON A CONTRASTING BACKGROUND.
5. THE INSULATION TYPES OF ALL ELECTRICAL CONDUCTORS USED IN THE PROJECT HAVE BEEN SPECIFIED IN ELECTRICAL SPECIFICATIONS (16120, 16121, AND 16122). THE TYPES OF CONDUITS USED IN THE PROJECT HAS BEEN SPECIFIED IN ELECTRICAL SPECIFICATIONS 16111.

NO.	DATE	REVISION	APP.
	MM/DD/YY	BRIEF DESCRIPTION	XXX
	MM/DD/YY	BRIEF DESCRIPTION	XXX
	MM/DD/YY	BRIEF DESCRIPTION	XXX

RPS A TETRA TECH COMPANY
Texas PE Firm Reg. #F-929
575 N. Dairy Ashford, Suite 700, Houston, Texas 77079
T +1 281 589 7257
E usinfrastructure@rpsgroup.com

FOR INTERIM REVIEW ONLY NOT INTENDED FOR PERMIT, BIDDING OR CONSTRUCTION PURPOSES.
ENGINEER:
HOSS FOROUZAN
P.E. SERIAL NO.77748
03/30/2026

SURVEYED BY:
FB NO. F-4578

CITY OF HOUSTON
HOUSTON PUBLIC WORKS

RECONSTRUCTION & REHABILITATION
COH LIFT STATIONS

SHADY MAPLES LIFT STATION ELECTRICAL SINGLE LINE DIAGRAM

WBS NUMBER	FOR CITY OF HOUSTON USE ONLY
R-000267-00178-3	
DRAWING SCALE	
AS NOTED	
CITY OF HOUSTON PM	
TAHA LOTIA	
SHEET NO. 85 OF 268	

SM-E-3

FILE PATH: O:\H8109_Lift Station Rehabilitation And Reconstruction (Tetratech)\6 Drawings\Electrical\Working\Shady Maples\Shady Maples_E-03.dwg
PLOTTED: 3/26/2026 6:05 PM
STYLE: GAI.ctb

PLOTTED: 3/26/2026 6:06 PM
FILE PATH: O:\H8109_Lift Station Rehabilitation And Reconstruction (Tetratech)\6 Drawings\Electrical\Working\Shady Maples\Shady Maples_E-01.dwg
STYLE: GAI.ctb

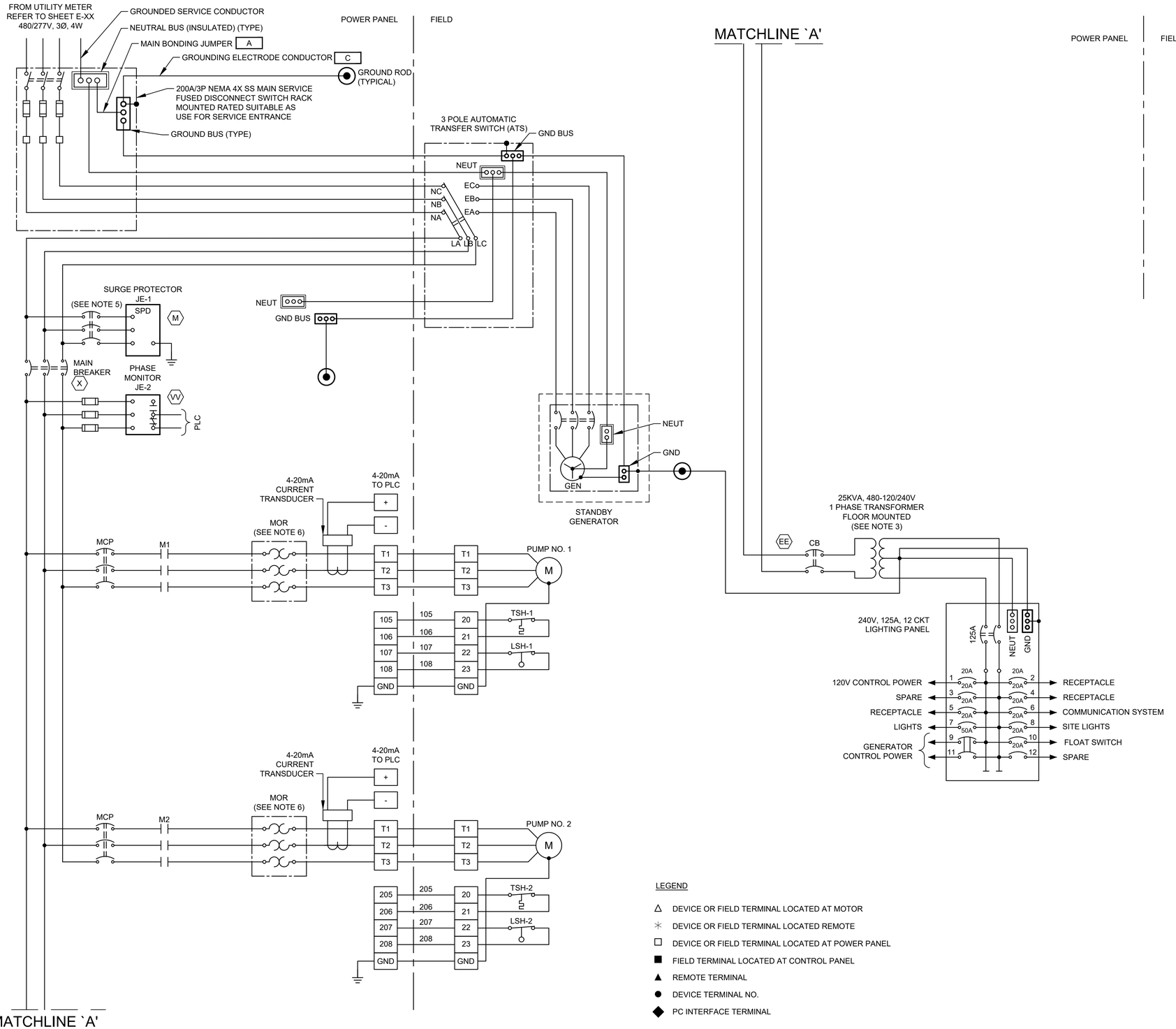

NOTES:

1. UNLESS OTHERWISE INDICATED, ALL DEVICES WITHOUT FURTHER DESIGNATION ARE LOCATED AT THE CONTROL PANEL.
2. NOT USED.
3. CONTRACTOR TO REVISE DWG. BASED ON MANUFACTURE AND SIZE.
4. CONTRACTOR SHALL TERMINATE POWER & CONTROL WIRES PER MANUFACTURER'S REQUIREMENTS.
5. PROVIDE BREAKER SIZE ACCORDING TO MANUFACTURER'S REQUIREMENTS.
6. THE COMBINATION OF CT AND MOTOR OVERLOAD RELAY IF REQUIRED.

NO.	DATE	REVISION	APP.
	MM/DD/YY	BRIEF DESCRIPTION	XXX
	MM/DD/YY	BRIEF DESCRIPTION	XXX
	MM/DD/YY	BRIEF DESCRIPTION	XXX

LEGEND

- △ DEVICE OR FIELD TERMINAL LOCATED AT MOTOR
- ✳ DEVICE OR FIELD TERMINAL LOCATED REMOTE
- □ DEVICE OR FIELD TERMINAL LOCATED AT POWER PANEL
- ■ FIELD TERMINAL LOCATED AT CONTROL PANEL
- ▲ REMOTE TERMINAL
- ● DEVICE TERMINAL NO.
- ◆ PC INTERFACE TERMINAL

RPS A TETRA TECH COMPANY
Texas PE Firm Reg. #F-929
575 N. Dairy Ashford, Suite 700, Houston, Texas 77079
T +1 281 589 7257
E usinfrastructure@rpsgroup.com

SURVEYED BY:
FB NO. F-4578

FOR INTERIM REVIEW ONLY NOT INTENDED FOR PERMIT, BIDDING OR CONSTRUCTION PURPOSES.
ENGINEER:
HOSS FOROUZAN
P.E. SERIAL NO.77748
03/30/2026

CITY OF HOUSTON
HOUSTON PUBLIC WORKS

RECONSTRUCTION & REHABILITATION
COH LIFT STATIONS

SHADY MAPLES LIFT STATION ELECTRICAL THREE LINE DIAGRAM

WBS NUMBER	FOR CITY OF HOUSTON USE ONLY
R-000267-00178-3	
DRAWING SCALE	
AS NOTED	
CITY OF HOUSTON PM	
TAHA LOTIA	
SHEET NO. 86 OF 268	

SM-E-4

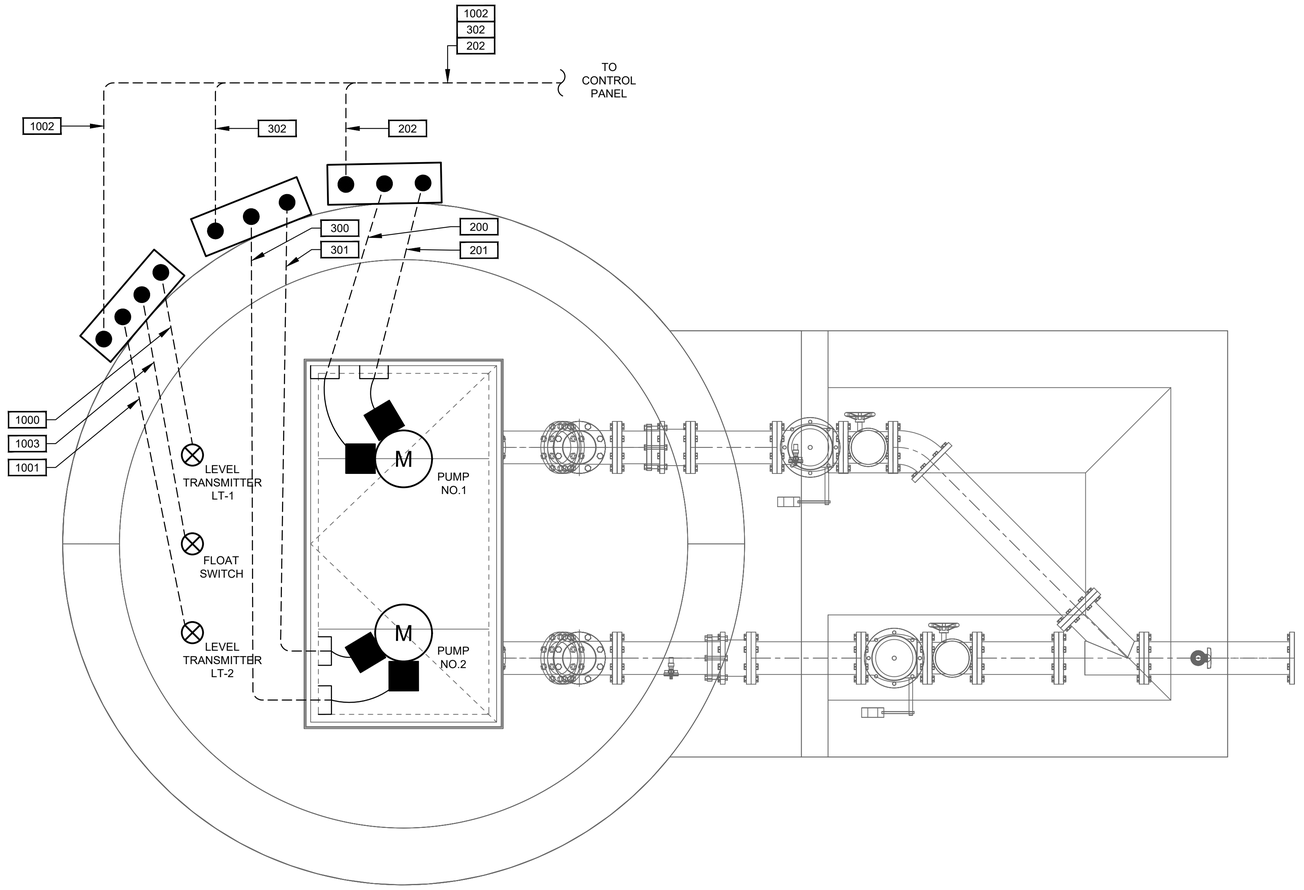

SHADY MAPLES LIFT STATION
ENLARGED PLAN

PLAN

3/4"=1'-0"

NO.	DATE	REVISION	APP.
	MM/DD/YY	BRIEF DESCRIPTION	XXX
	MM/DD/YY	BRIEF DESCRIPTION	XXX
	MM/DD/YY	BRIEF DESCRIPTION	XXX

RPS
A TETRA TECH COMPANY
Texas PE Firm Reg. #F-929
575 N. Dairy Ashford, Suite 700,
Houston, Texas 77079
T +1 281 589 7257
E usinfrastructure@rpsgroup.com

FOR INTERIM REVIEW ONLY NOT INTENDED FOR PERMIT, BIDDING OR CONSTRUCTION PURPOSES.
ENGINEER:
HOSS FOROUZAN
P.E. SERIAL NO.77748
03/30/2026

SURVEYED BY:
FB NO. F-4578

CITY OF HOUSTON
HOUSTON PUBLIC WORKS

RECONSTRUCTION & REHABILITATION
COH LIFT STATIONS

SHADY MAPLES LIFT STATION ENLARGED ELECTRICAL LIFT STATION PLAN

WBS NUMBER	FOR CITY OF HOUSTON USE ONLY
R-000267-00178-3	
DRAWING SCALE	
AS NOTED	
CITY OF HOUSTON PM	
TAHA LOTIA	
SHEET NO. 87 OF 268	

SM-E-5

FILE PATH: O:\H8109_Lift Station Rehabilitation And Reconstruction (Tetratech)\6 Drawings\Electrical\Working\Shady Maples\Shady Maples_E-01.dwg STYLE: GAI.ctb
PLOTTED: 3/26/2026 6:06 PM

NOTES BY SYMBOL "⬡#⬡":

1. REFER TO STRUCTURAL DRAWINGS FOR PLATFORM DETAILS.
2. CONDUIT TO BE INSTALLED BELOW PLATFORM.
3. GENERATOR NOISE LEVEL SHALL MEET LOCAL NOISE REQUIREMENTS AT 65dBA DAYTIME AND 58 dBA NIGHTTIME.

NO.	DATE	REVISION	APP.
	MM/DD/YY	BRIEF DESCRIPTION	XXX
	MM/DD/YY	BRIEF DESCRIPTION	XXX
	MM/DD/YY	BRIEF DESCRIPTION	XXX

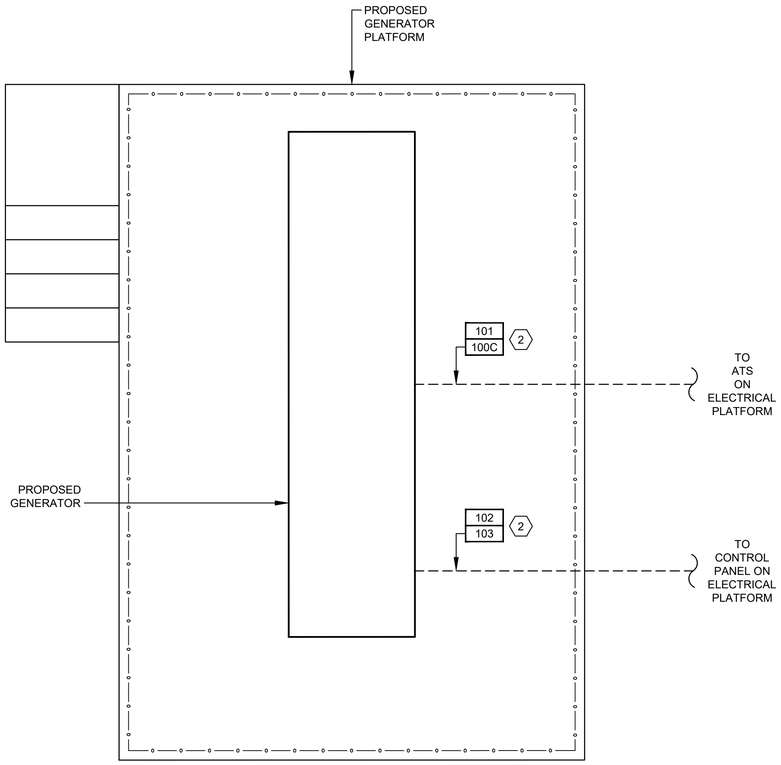

PROPOSED GENERATOR PLATFORM LAYOUT

DETAIL 1 (1) (3)
3/4" = 1'-0"

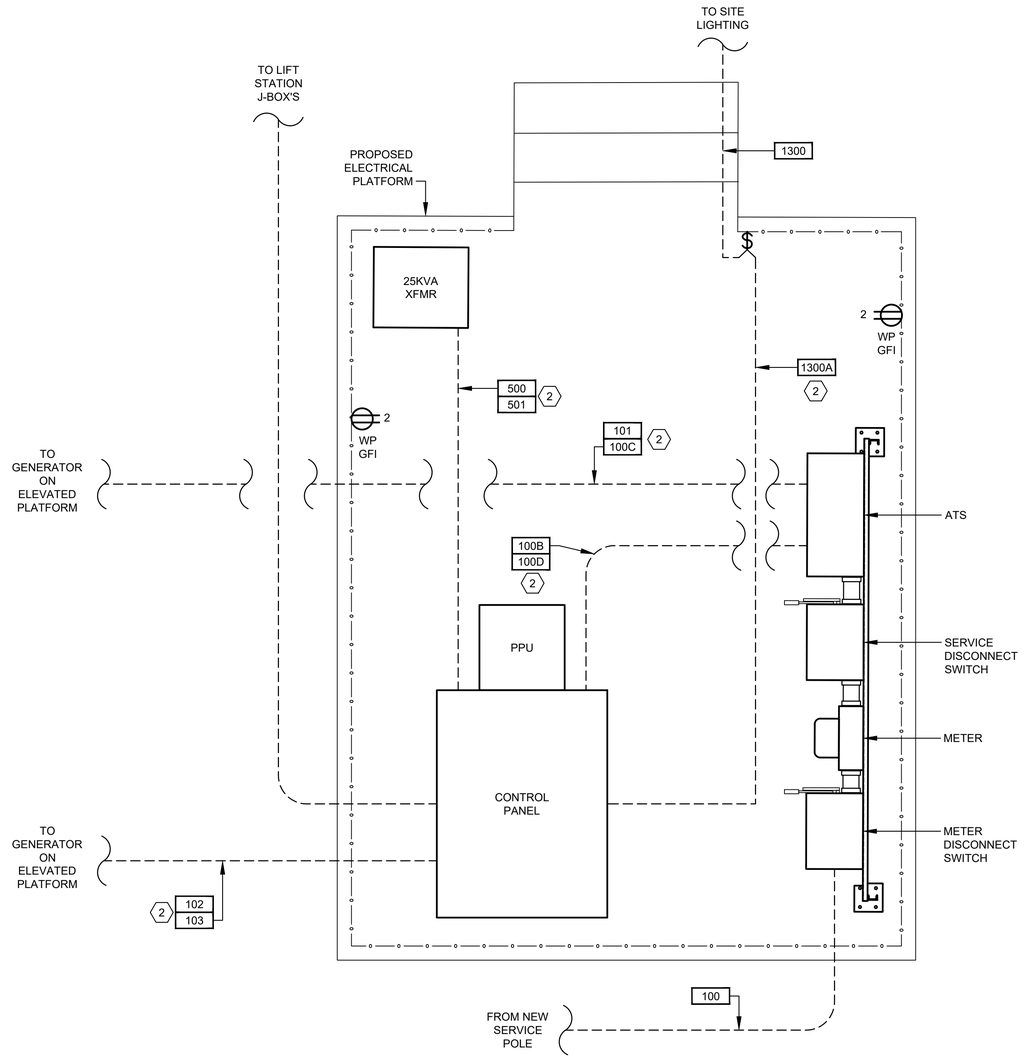

PROPOSED ELECTRICAL PLATFORM LAYOUT

DETAIL 1 (1) (3)
3/4" = 1'-0"

RPS A TETRA TECH COMPANY
Texas PE Firm Reg. #F-929
575 N. Dairy Ashford, Suite 700, Houston, Texas 77079
T +1 281 589 7257
E usinfrastructure@rpsgroup.com

FOR INTERIM REVIEW ONLY NOT INTENDED FOR PERMIT, BIDDING OR CONSTRUCTION PURPOSES.
ENGINEER:
HOSS FOROUZAN
P.E. SERIAL NO.77748
03/30/2026

SURVEYED BY:
FB NO. F-4578

CITY OF HOUSTON
HOUSTON PUBLIC WORKS

RECONSTRUCTION & REHABILITATION
COH LIFT STATIONS

SHADY MAPLES LIFT STATION
PROPOSED ELECTRICAL PLATFORM LAYOUT

WBS NUMBER	FOR CITY OF HOUSTON USE ONLY
R-000267-00178-3	
DRAWING SCALE	
AS NOTED	
CITY OF HOUSTON PM	
TAHA LOTIA	
SHEET NO. 88 OF 268	

SM-E-6

FILE PATH: O:\H8109_Lift Station Rehabilitation And Reconstruction (Tetratech)\6 Drawings\Electrical\Working\Shady Maples\Shady Maples_E-01.dwg
PLOT STYLE: GAI.ctb
PLOTTED: 3/26/2026 6:06 PM

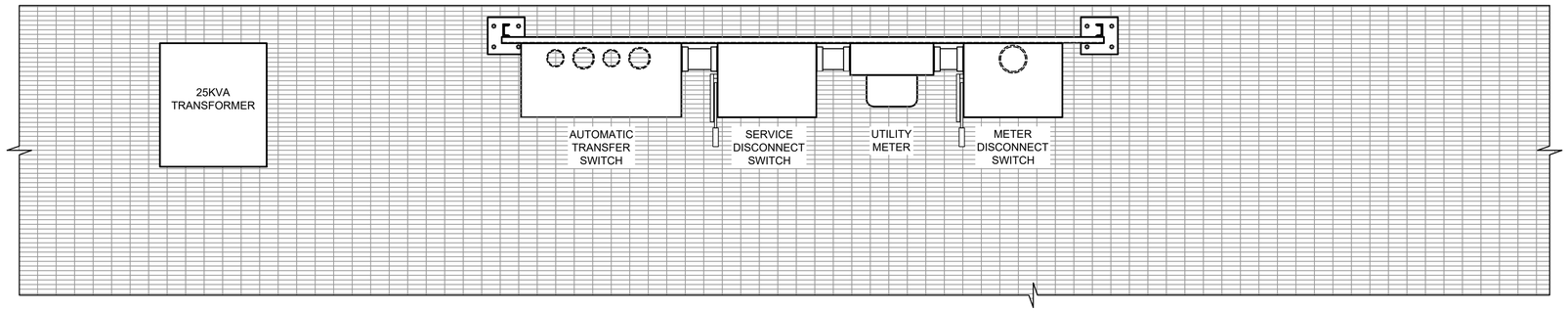

PLAN VIEW

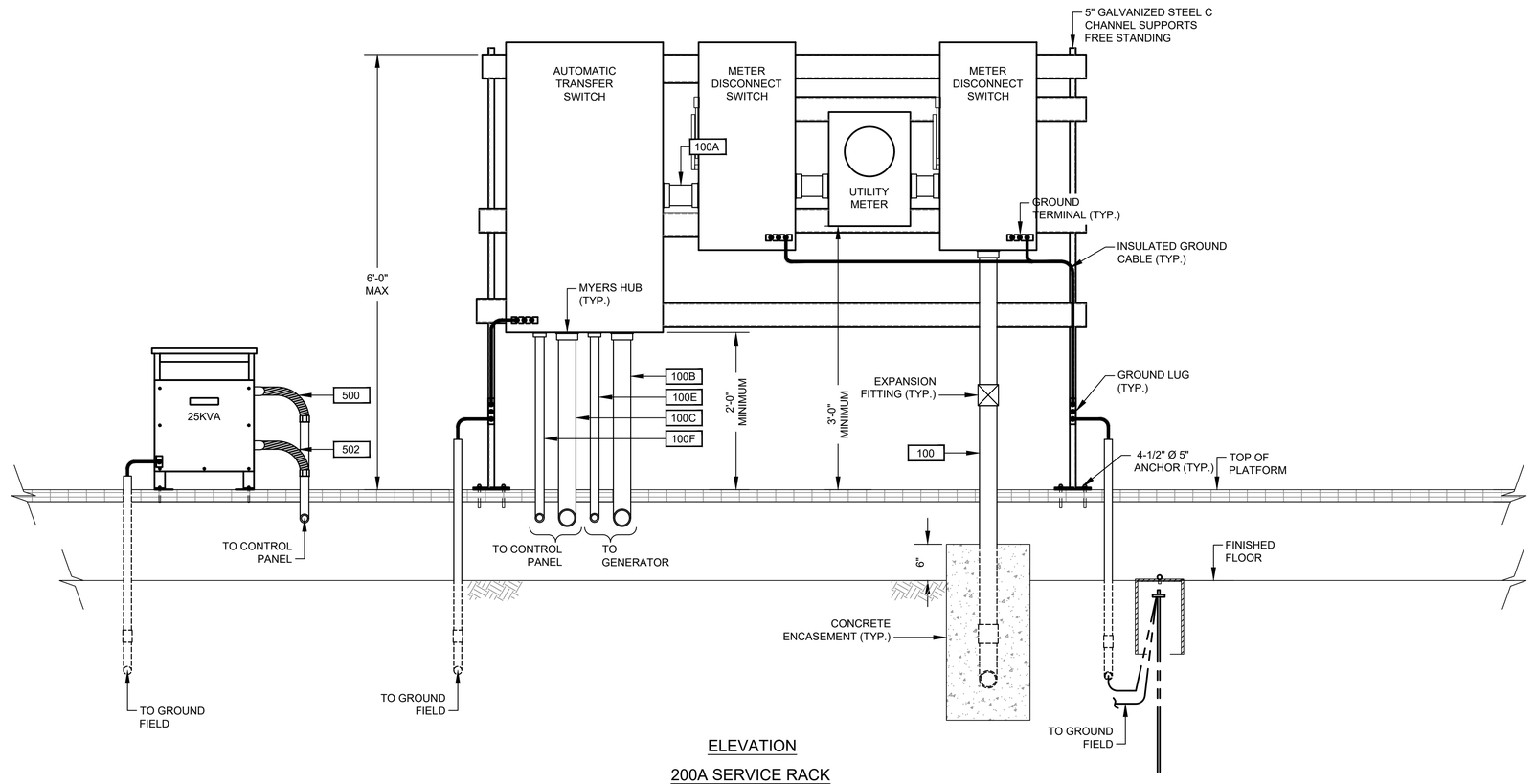

ELEVATION

200A SERVICE RACK

NO.	DATE	REVISION	APP.
	MM/DD/YY	BRIEF DESCRIPTION	XXX
	MM/DD/YY	BRIEF DESCRIPTION	XXX
	MM/DD/YY	BRIEF DESCRIPTION	XXX

RPS A TETRA TECH COMPANY
Texas PE Firm Reg. #F-929
575 N. Dairy Ashford, Suite 700,
Houston, Texas 77079
T +1 281 589 7257
E usinfrastructure@rpsgroup.com

SURVEYED BY:
FB NO. F-4578

FOR INTERIM REVIEW ONLY NOT INTENDED FOR PERMIT, BIDDING OR CONSTRUCTION PURPOSES.
ENGINEER:
HOSS FOROUZAN
P.E. SERIAL NO.77748
03/30/2026

CITY OF HOUSTON
HOUSTON PUBLIC WORKS

RECONSTRUCTION & REHABILITATION
COH LIFT STATIONS

SHADY MAPLES LIFT STATION ELECTRICAL SERVICE RACK DETAIL

WBS NUMBER	FOR CITY OF HOUSTON USE ONLY
R-000267-00178-3	
DRAWING SCALE	
AS NOTED	
CITY OF HOUSTON PM	
TAHA LOTIA	
SHEET NO. 89 OF 268	

SM-E-7

FILE PATH: O:\H8109_Lift Station Rehabilitation And Reconstruction (Tetratech)\6 Drawings\Electrical\Working\Shady Maples\Shady Maples_E-07.dwg
PLOTTED: 3/26/2026 6:06 PM
STYLE: GAI.ctb

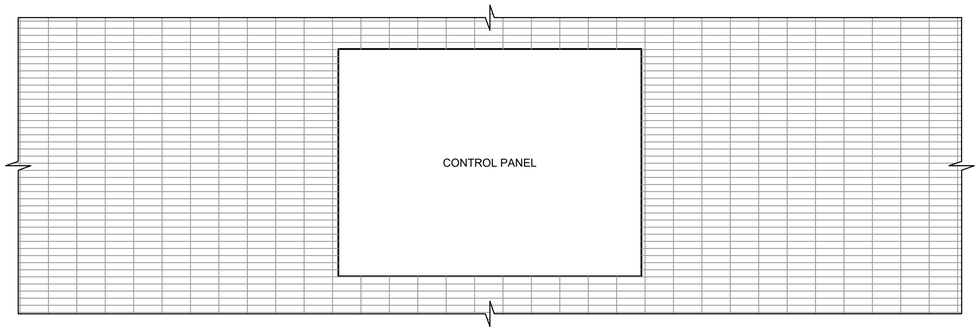

PLAN VIEW

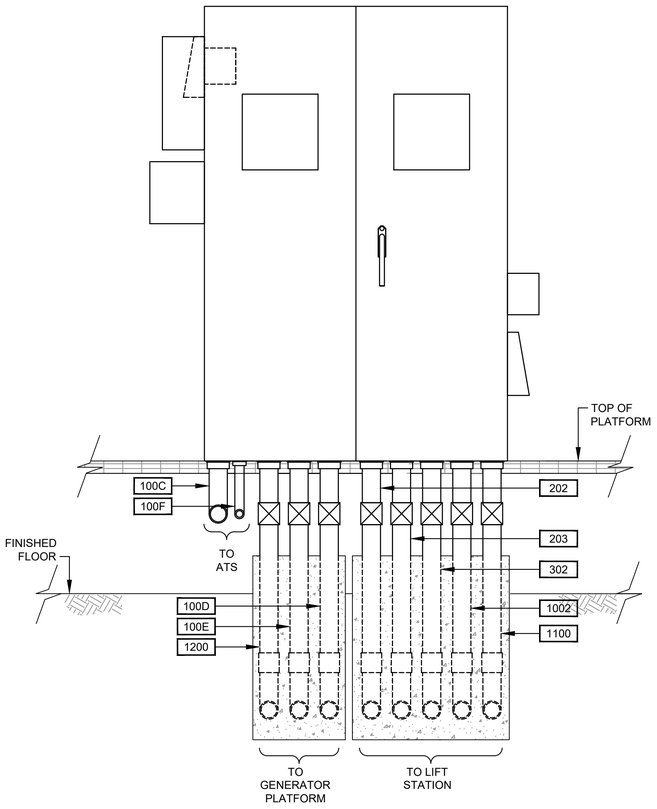

CONTROL PANEL ELEVATION

DETAIL 1 / NTS

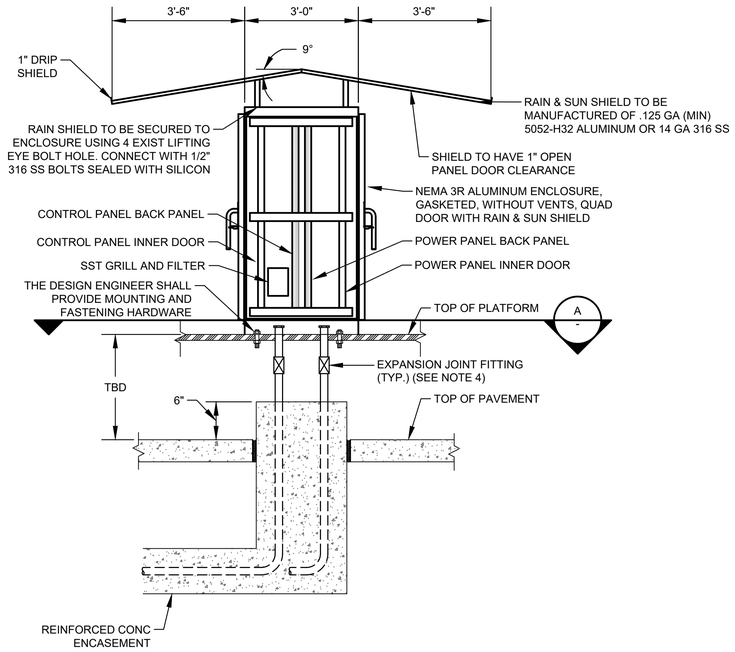

CONTROL CABINET ENCLOSURE WITH PLATFORM
(SEE NOTE 6)

DETAIL 2 / NTS

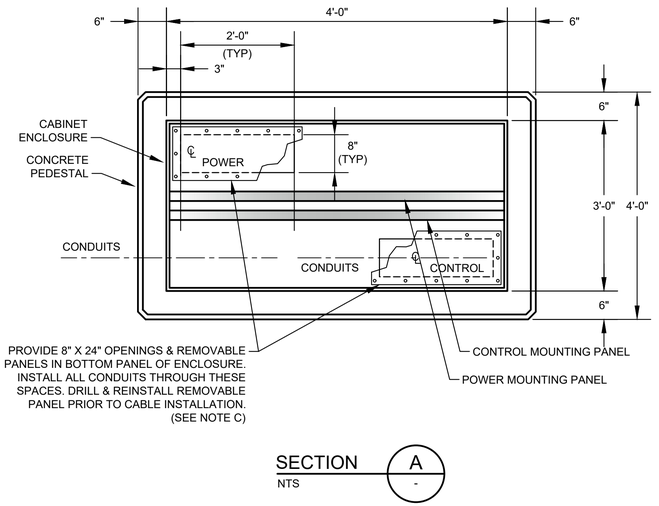

SECTION A / NTS

GENERAL NOTES:

1. REFER TO SPECIFICATION SECTION 13325 PROCESS CONTROL SYSTEMS CONTROL PANELS FOR PANEL DIMENSIONS.
2. COMMUNICATION PANEL TO BE INSTALLED ABOVE SERVICE RACK ELEVATION.
3. EXPANSION JOINT FITTINGS AS REQUIRED.
4. REFER TO SERVICE RACK FOR DETAIL.
5. POWER FACTOR CAPACITOR TO BE MOUNTED OUTSIDE SIDE WALL OF THE CONTROL CABINET.
6. REFER TO STRUCTURAL DRAWINGS FOR PLATFORM DETAIL.

NO.	DATE	REVISION	APP.
	MM/DD/YY	BRIEF DESCRIPTION	XXX
	MM/DD/YY	BRIEF DESCRIPTION	XXX
	MM/DD/YY	BRIEF DESCRIPTION	XXX

RPS A TETRA TECH COMPANY
Texas PE Firm Reg. #F-929
575 N. Dairy Ashford, Suite 700, Houston, Texas 77079
T +1 281 589 7257
E usinfrastructure@rpsgroup.com

SURVEYED BY:
FB NO. F-4578

FOR INTERIM REVIEW ONLY NOT INTENDED FOR PERMIT, BIDDING OR CONSTRUCTION PURPOSES.
ENGINEER:
HOSS FOROUZAN
P.E. SERIAL NO.77748
03/30/2026

CITY OF HOUSTON
HOUSTON PUBLIC WORKS

RECONSTRUCTION & REHABILITATION
COH LIFT STATIONS

SHADY MAPLES LIFT STATION CONTROL CABINET ENCLOSURE DETAIL

WBS NUMBER	FOR CITY OF HOUSTON USE ONLY
R-000267-00178-3	
DRAWING SCALE	
AS NOTED	
CITY OF HOUSTON PM	
TAHA LOTIA	
SHEET NO. 90 OF 268	

SM-E-8

PLOTTED: 3/26/2026 6:06 PM
FILE PATH: O:\H8109_Lift Station Rehabilitation And Reconstruction (Tetratech)\6 Drawings\Electrical\Working\Shady Maples\Shady Maples_E-01.dwg
STYLE: GAI.ctb

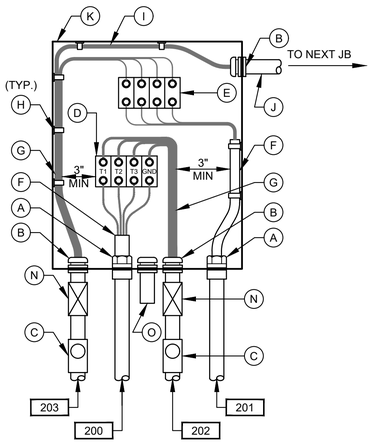

PUMP NO.1
JUNCTION BOX

DETAIL 2
NTS
(SEE NOTE 7)

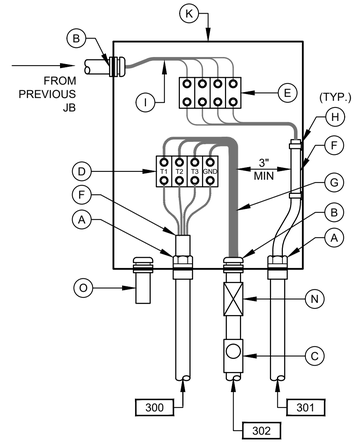

PUMP NO.2
JUNCTION BOX

DETAIL 3
NTS
(SEE NOTE 7)

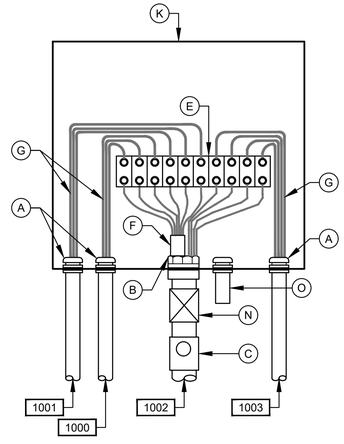

LEVEL TRANSMITTER
JUNCTION BOX

DETAIL 4
NTS
(SEE NOTE 7)

NOTES:

1. NAMEPLATES SHALL BE MOUNTED TO JUNCTION BOXES USING 316 STAINLESS STEEL HARDWARE.
2. MAINTAIN MINIMUM SEPARATION REQUIRED UNDER NEC ARTICLE 504, BETWEEN INTRINSICALLY SAFE CONTROL WIRING AND NON INTRINSICALLY SAFE MOTOR FEEDER WIRING.
3. UNLESS OTHERWISE NOTED, ALL EXTERIOR EXPOSED CONDUITS SHALL BE PVC COATED ALUMINUM.
4. UNLESS OTHERWISE NOTED, ALL NUTS, BOLTS, SCREWS WASHERS, ETC SHALL BE TYPE 316 STAINLESS STEEL.
5. ALL UNDERGROUND CONDUITS TO BE ENCASED IN REINFORCED CONCRETE DUCTBANK.
6. PROVIDE ANTI-CORROSIVE SPRAY ON ANY BARE METAL PARTS OR EXPOSED WIRE.
7. SEE WIRING SCHEMATICS FOR TERMINALS AND WIRE NUMBERS.
8. ANY CONDUIT REQUIRING A CSBE SEAL, SHALL BE A MINIMUM SIZE OF 2 1/2" PER CABLE.
9. DETAIL SHOWN MAY BE MODIFIED PER SITE SITUATION.
10. COORDINATE WITH WASTE WATER OPERATIONS ELECTRICAL ORGANIZATION FOR THE OPENING OF JUNCTION BOXES TO THE SIDE OF WET WELL IF REQUIRED DURING CONSTRUCTION.
11. THE ENCLOSURES WITH ELECTRICAL CIRCUITS SHALL BE A MINIMUM OF 5 FEET FROM ANY CLASSIFIED AREA, OTHERWISE EXPLOSION PROOF TYPE ENCLOSURES SHALL BE USED.
12. THE RECEPTACLES SHALL BE EXPLOSION PROOF TYPE IF INSTALLED WITHIN 5 FEET OF CLASSIFIED AREA, SHALL BE FIELD VERIFIED.

JUNCTION BOX EQUIPMENT SCHEDULE

- A - OZ GEDNEY CSBE SEAL
- B - WATERTIGHT CONDUIT HUB WITH INSULATED BUSHING
- C - CLASS I, DIV 1, EXPLOSION PROOF SEAL INSTALLED PER NEC DIV 501
- D - POWER TERMINAL BLOCK W/SCREW DOWN BOX LUGS
- E - CONTROL TERM BLOCK W/SCREW DOWN BOX LUGS
- F - MULTI-CONDUCTOR CABLE, REMOVE OUTER JACKET AS SHOWN
- G - WIRING AS SCHEDULED
- H - WIRING HARNESS PERMANENTLY AFFIXED
- I - PUMP CONTROL WIRING FROM PUMPS 2; 2 & 3; 4; OR D2, AS APPLICABLE
- J - 1 1/2" PVC COATED CONDUIT NIPPLE
- K - NEMA 4X STAINLESS STEEL JUNCTION BOX WITH GASKETED FRONT COVER, SINGLE QUARTER TURN, OIL-TIGHT LATCH AND PADLOCKING PROVISIONS, HOFFMAN D-3L16H1206 SS LF OR EQUAL. MINIMUM SIZE: 12"W X 16"H X 6"D
- L - NAMEPLATE, SEE SPECIFICATIONES (SEE NAMEPLATE SCHEDULE)
- M - MOTOR RATED SWITCH
- N - EXPANSION FITTING
- O - DRAIN VENT

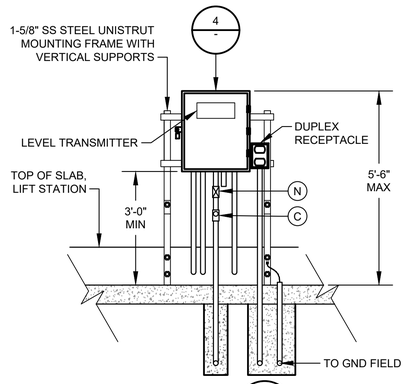

DETAIL 5
NTS

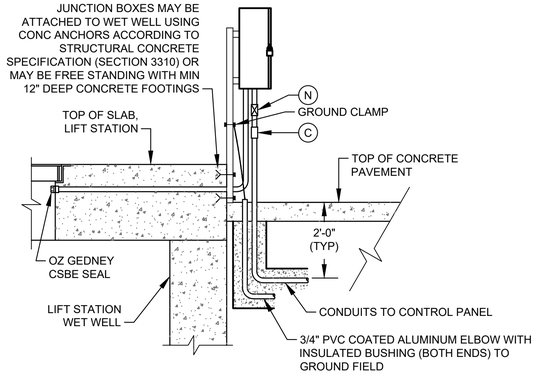

TYP SIDE VIEW FOR DETAIL 1

(SEE NOTE 10)

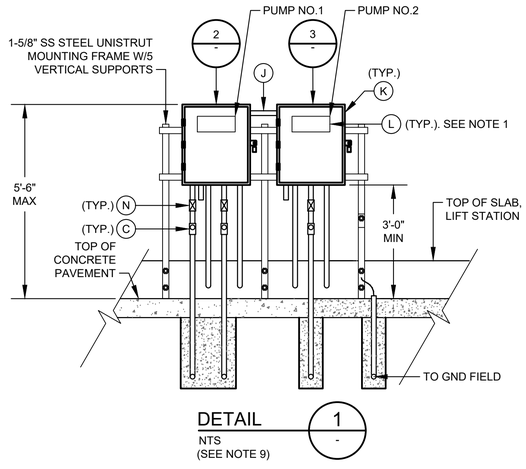

DETAIL 1
NTS
(SEE NOTE 9)

NO.	DATE	REVISION	APP.
	MM/DD/YY	BRIEF DESCRIPTION	XXX
	MM/DD/YY	BRIEF DESCRIPTION	XXX
	MM/DD/YY	BRIEF DESCRIPTION	XXX

RPS A TETRA TECH COMPANY
Texas PE Firm Reg. #F-929
575 N. Dairy Ashford, Suite 700, Houston, Texas 77079
T +1 281 589 7257
E usinfrastructure@rpsgroup.com

SURVEYED BY:
FB NO. F-4578

FOR INTERIM REVIEW ONLY NOT INTENDED FOR PERMIT, BIDDING OR CONSTRUCTION PURPOSES.
ENGINEER:
HOSS FOROUZAN
P.E. SERIAL NO.77748
03/30/2026

CITY OF HOUSTON
HOUSTON PUBLIC WORKS

RECONSTRUCTION & REHABILITATION
COH LIFT STATIONS

SHADY MAPLES LIFT STATION ELECTRICAL JUNCTION BOX DETAILS

WBS NUMBER	FOR CITY OF HOUSTON USE ONLY
R-000267-00178-3	
DRAWING SCALE	
AS NOTED	
CITY OF HOUSTON PM	
TAHA LOTIA	
SHEET NO. 91 OF 268	

SM-E-9

PLOTTED: 3/26/2026 6:06 PM
FILE PATH: O:\H8109_Lift Station Rehabilitation And Reconstruction (Tetratech)\6 Drawings\Electrical\Working\Shady Maples\Shady Maples_E-09.dwg STYLE: GAI.ctb

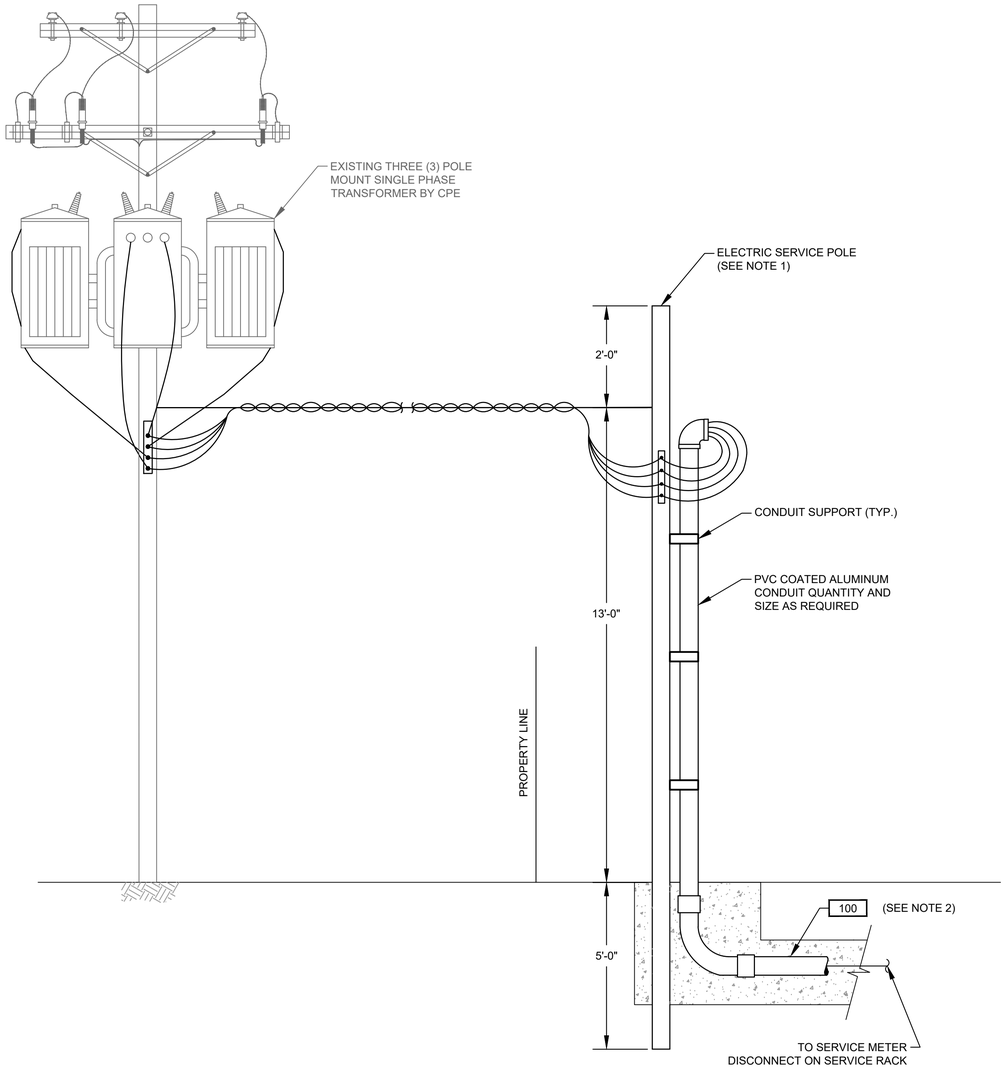

TYPICAL ELECTRICAL SERVICE ENTRANCE
FOR POWER SUPPLY BELOW 500KVA

DETAIL 1
NTS. -

NOTES:

1. WOODEN POLE 20' LONG. TOP DIAMETER 6", BOTTOM DIAMETER 8" PROVIDED AND INSTALLED BY ELECTRICAL CONTRACTOR.
2. ELECTRICAL SERVICE FEEDER PROVIDED AND INSTALLED BY ELECTRICAL CONTRACTOR. COORDINATE WITH CPE FOR THE REQUIREMENTS OF THE INSTALLATION.

NO.	DATE	REVISION		APP.
	MM/DD/YY	BRIEF	DESCRIPTION	XXX
	MM/DD/YY	BRIEF	DESCRIPTION	XXX
	MM/DD/YY	BRIEF	DESCRIPTION	XXX

RPS A TETRA TECH COMPANY
Texas PE Firm Reg. #F-929
575 N. Dairy Ashford, Suite 700, Houston, Texas 77079
T +1 281 589 7257
E usinfrastructure@rpsgroup.com

SURVEYED BY:
FB NO. F-4578

FOR INTERIM REVIEW ONLY NOT INTENDED FOR PERMIT, BIDDING OR CONSTRUCTION PURPOSES.
ENGINEER:
HOSS FOROUZAN
P.E. SERIAL NO.77748
03/30/2026

CITY OF HOUSTON
HOUSTON PUBLIC WORKS

RECONSTRUCTION & REHABILITATION
COH LIFT STATIONS

SHADY MAPLES LIFT STATION ELECTRICAL SERVICE POLE DETAIL

WBS NUMBER	FOR CITY OF HOUSTON USE ONLY
R-000267-00178-3	
DRAWING SCALE	
AS NOTED	
CITY OF HOUSTON PM	
TAHA LOTIA	
SHEET NO. 92 OF 268	

SM-E-10

PLOTTED: 3/26/2026 6:06 PM
FILE PATH: O:\H8109_Lift Station Rehabilitation And Reconstruction (Tetratech)\6 Drawings\Electrical\Working\Shady Maples\Shady Maples_E-10.dwg STYLE: GAI.ctb

	DESCRIPTION	SERVICE		ROUTING			CONDUIT & WIRE SIZE
		VOLTAGE	AMPS OR HP	FROM	TO	VIA	
A	MAIN BONDING JUMPER	--	--	MAIN FUSED DISCONNECT NEUTRAL	MAIN FUSED DISCONNECT GROUND	--	#4 CU GND.
B	EQUIPMENT BONDING JUMPER	--	--	MCC/POWER PANEL ENCLOSURE	POWER/CONTROL PANEL & EQUIPMENT	--	#4 CU GND.
C	GROUNDED ELECTRODE CONDUCTOR	--	--	GROUNDING ELECTRODE	MAIN SERVICE FUSED DISCONNECT GROUNDING	--	#4 CU GND.
100	SERVICE ENTRANCE	480V	200A	UTILITY POWER SERVICE	METER DISCONNECT		3 #3/0 AWG., #4 NEUT. #3 GND., 2-1/2" C.
100A	SERVICE POWER	480V	200A	SERVICE DISCONNECT SWITCH	ATS	--	3 #3/0 AWG., #4 NEUT. #3 GND., 2-1/2" C.
100B	EMERGENCY POWER	480V	200A	STANDBY GENERATOR	ATS	--	3 #3/0 AWG., #4 NEUT. #3 GND., 2-1/2" C.
100C	ELECTRICAL POWER	480V	200A	ATS	CONTROL PANEL	--	3 #3/0 AWG., #4 NEUT. #3 GND., 2-1/2" C.
100D	GENERATOR AUX. POWER	120/240V	50A	STANDBY GENERATOR	LIGHTING PANEL	--	3#4 AWG., #8 GND., 1-1/2"C.
100E	GENERATOR CONTROLS	24VDC	--	STANDBY GENERATOR	ATS	--	6#14 AWG., #14 GND., 3/4"C.
100F	NORMAL/EMERGENCY POWER STATUS	24VDC	--	ATS	CONTROL PANEL	--	4 #14 AWG., #14 GND., 3/4"C.
100G	GENERATOR ALARM SIGNALS	24VDC	--	STANDBY GENERATOR	CONTROL PANEL	--	16#14 AWG., #14 GND., 1"C.
101	GROUND ELECTRODE CONDUCTOR	--	--	CONTROL PANEL	GROUND FIELD	--	#2/0 GND.
105	COMMUNICATION	--	--	COMMUNICATION POLE	CONTROL PANEL	--	1-1/2"C. CAT 5E
200	PUMP NO. 1 POWER	480V	10 HP	PUMP NO. 1	PUMP NO. 1 JUNCTION BOX	--	MANUFACTURER CABLE IN 2-1/2"C.
201	PUMP NO. 1 CONTROLS	120V	--	PUMP NO. 1	PUMP NO. 1 JUNCTION BOX	--	MANUFACTURER CABLE IN 2-1/2"C.
202	PUMP NO. 1 POWER	480V	10 HP	PUMP NO. 1 JUNCTION BOX	PUMP 1 STARTER	--	3#10 AWG., #10 GND, 1"C.
203	COMBINED PUMP CONTROLS	120V	--	PUMP NO. 1 JUNCTION BOX	CONTROL PANEL	COMBINE PUMP 1 & 2 CONTROLS	12#4 AWG, #14 GND, 1"C.
300	PUMP NO. 2 POWER	480V	10 HP	PUMP NO. 2	PUMP NO. 2 JUNCTION BOX	--	MANUFACTURER CABLE IN 2-1/2"C.
301	PUMP NO. 2 CONTROLS	120V	--	PUMP NO. 2	PUMP NO. 2 JUNCTION BOX	--	MANUFACTURER CABLE IN 2-1/2"C.
302	PUMP NO. 2 POWER	480V	10 HP	PUMP NO. 2 JUNCTION BOX	PUMP 2 STARTER	--	3#10, #10 GND., 1"C.
500	LIGHTING TRANSFORMER PRIMARY FEEDER	480V	70A	CONTROL PANEL	LIGHTING TRANSFORMER PRIMARY	--	2#4 AWG, #8 GND, 1"C.
501	LIGHTING PANEL GROUND	--	--	LIGHTING PANEL	GROUND FIELD	--	#6 GND., 1"C.
502	LIGHTING PANEL FEEDER	120/240V	--	LIGHTING TRANSFORMER	LIGHTING PANEL	--	3#1 AWG, #6 GND., 1-1/2"C.
1000	LEVEL TRANSMITTER	24VDC	--	TRANSMITTER	TRANSMITTER JUNCTION BOX	--	MANUFACTURER'S CABLE IN 2-1/2"C
1001	LEVEL TRANSMITTER	24VDC	--	TRANSMITTER	TRANSMITTER JUNCTION BOX	--	MANUFACTURER'S CABLE IN 2-1/2"C
1002	COMBINED LEVEL TRANSMITTERS & FLOAT SWITCH	24VDC	--	CONTROL PANEL	TRANSMITTER JUNCTION BOX	--	2-TRI, 4#14, 2" C.
1003	WELL FLOAT SWITCHES	24VDC	--	TRANSMITTER JUNCTION BOX	FLOAT SWITCH NO.1 & NO.2	--	MANUFACTURER'S CABLE IN 2-1/2"C
1100	120VAC FOR RECEPTACLE	-	--	LIGHTING PANEL	RECEPTACLE NEXT TO TRANSMITTER J-BOX	--	2#12, #12G, 1" C.
1200	120VAC FOR RECEPTACLE	-	--	LIGHTING PANEL	RECEPTACLES ON GENERATOR PLATFORM	--	4#12, #12G, 1" C.
1300	SITE LIGHTING	120VAC	--	LIGHTING PANEL	LIGHT SWITCH	--	2#12, #12G, 1" C.
1300A	SITE LIGHTING	120VAC	--	LIGHT SWITCH	SITE LIGHTS	--	2#12, #12G, 1" C.
1300B	SITE LIGHTING	120VAC	--	LIGHT SWITCH	COMM POLE LIGHT	--	2#12, #12G, 1" C.

NOTES BY SYMBOL "⟨#⟩":

⟨1⟩ REFER TO SPEC SECTION 16120 FOR CONDUCTOR COLOR CODE.

NO.	DATE	REVISION	APP.
	MM/DD/YY	BRIEF DESCRIPTION	XXX
	MM/DD/YY	BRIEF DESCRIPTION	XXX
	MM/DD/YY	BRIEF DESCRIPTION	XXX

RPS A TETRA TECH COMPANY
Texas PE Firm Reg. #F-929
575 N. Dairy Ashford, Suite 700,
Houston, Texas 77079
T +1 281 589 7257
E usinfrastructure@rpsgroup.com

SURVEYED BY:
FB NO. F-4578

FOR INTERIM REVIEW ONLY NOT INTENDED FOR PERMIT, BIDDING OR CONSTRUCTION PURPOSES.
ENGINEER:
HOSS FOROUZAN
P.E. SERIAL NO.77748
03/30/2026

CITY OF HOUSTON
HOUSTON PUBLIC WORKS

RECONSTRUCTION & REHABILITATION
COH LIFT STATIONS

SHADY MAPLES LIFT STATION ELECTRICAL CONDUIT SCHEDULE

WBS NUMBER	FOR CITY OF HOUSTON USE ONLY
R-000267-00178-3	
DRAWING SCALE	
AS NOTED	
CITY OF HOUSTON PM	
TAHA LOTIA	
SHEET NO. 93 OF 268	

SM-E-11

PLOTTED: 3/26/2026 6:07 PM
FILE PATH: O:\H8109_Lift Station Rehabilitation And Reconstruction (Tetratech)\6 Drawings\Electrical\Working\Shady Maples\Shady Maples_E-PLOT STYLE: GAI.ctb

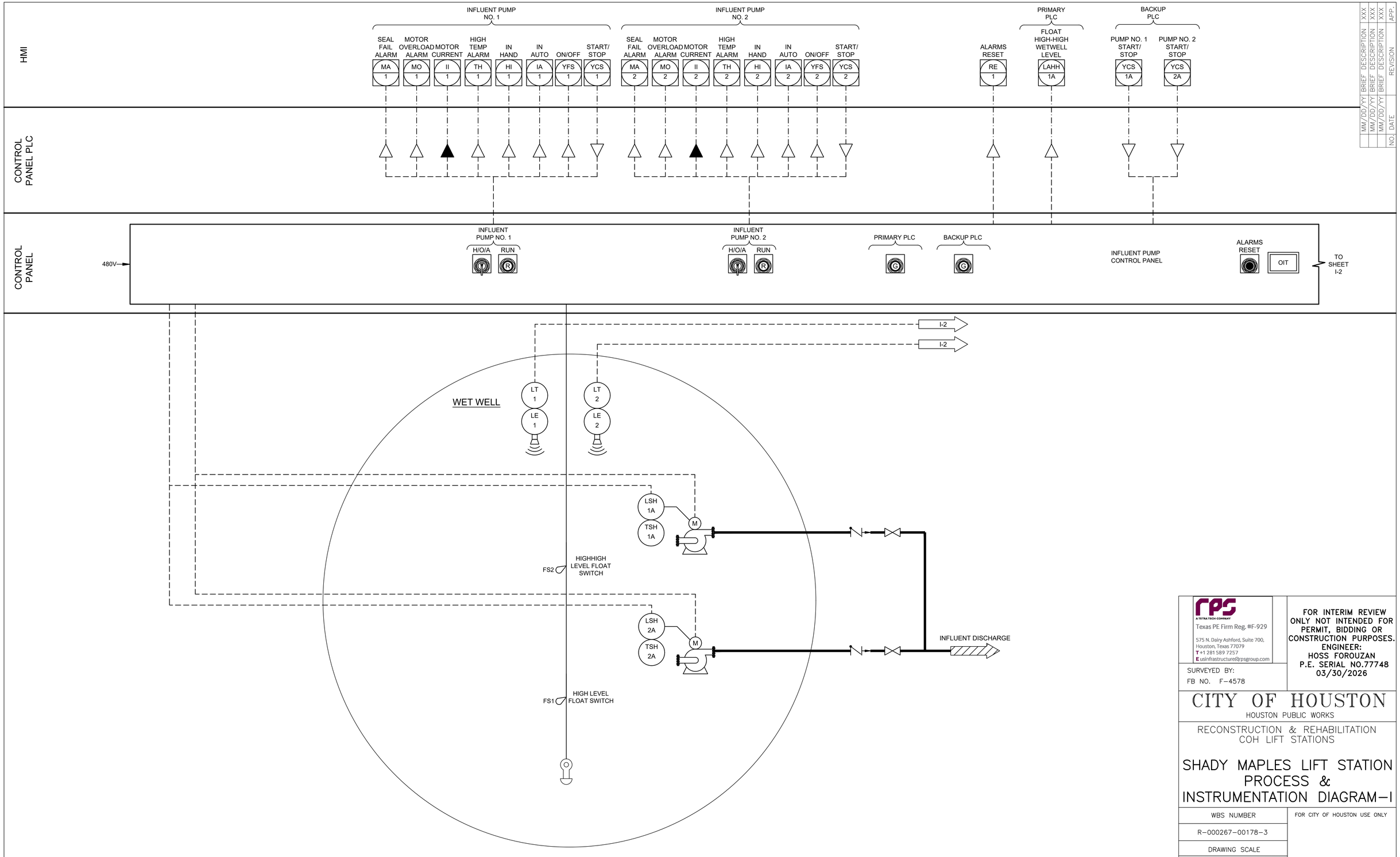

NO.	DATE	REVISION	APP.
	MM/DD/YY	BRIEF DESCRIPTION	XXX
	MM/DD/YY	BRIEF DESCRIPTION	XXX
	MM/DD/YY	BRIEF DESCRIPTION	XXX

rps
A TETRA TECH COMPANY
Texas PE Firm Reg. #F-929
575 N. Dairy Ashford, Suite 700,
Houston, Texas 77079
T +1 281 589 7257
E usinfrastructure@rpsgroup.com

FOR INTERIM REVIEW ONLY NOT INTENDED FOR PERMIT, BIDDING OR CONSTRUCTION PURPOSES.
ENGINEER:
HOSS FOROUZAN
P.E. SERIAL NO.77748
03/30/2026

SURVEYED BY:
FB NO. F-4578

CITY OF HOUSTON
HOUSTON PUBLIC WORKS

RECONSTRUCTION & REHABILITATION
COH LIFT STATIONS

SHADY MAPLES LIFT STATION PROCESS & INSTRUMENTATION DIAGRAM-I

WBS NUMBER	FOR CITY OF HOUSTON USE ONLY
R-000267-00178-3	
DRAWING SCALE	
AS NOTED	
CITY OF HOUSTON PM	
TAHA LOTIA	
SHEET NO. 94 OF 268	

SM-1-1

PLOTTED: 3/26/2026 6:07 PM

FILE PATH: O:\H8109_Lift Station Rehabilitation And Reconstruction (Tetratech)\6 Drawings\Instrumentation And Control\Working\Shady Maples\HOTOSTGNL_IC01.dwg

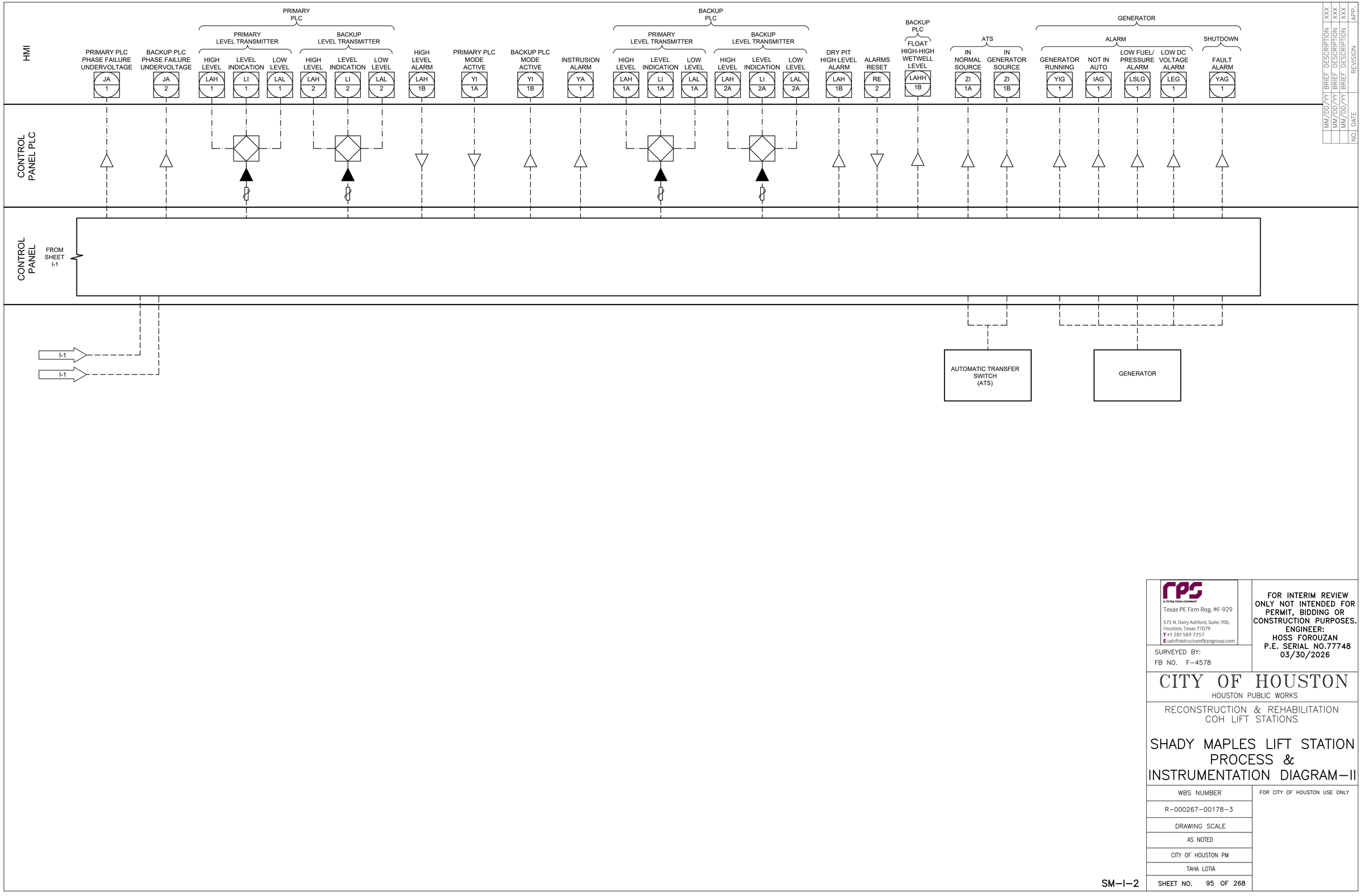

NO.	DATE	REVISION	APP.
	MM/DD/YY	BRIEF DESCRIPTION	XXX
	MM/DD/YY	BRIEF DESCRIPTION	XXX
	MM/DD/YY	BRIEF DESCRIPTION	XXX

rps
A TETRA TECH COMPANY
Texas PE Firm Reg. #F-929
575 N. Dairy Ashford, Suite 700, Houston, Texas 77079
T +1 281 589 7257
E usinfrastructure@rpsgroup.com

FOR INTERIM REVIEW ONLY NOT INTENDED FOR PERMIT, BIDDING OR CONSTRUCTION PURPOSES.
ENGINEER:
HOSS FOROUZAN
P.E. SERIAL NO.77748
03/30/2026

SURVEYED BY:
FB NO. F-4578

CITY OF HOUSTON
HOUSTON PUBLIC WORKS

RECONSTRUCTION & REHABILITATION
COH LIFT STATIONS

SHADY MAPLES LIFT STATION PROCESS & INSTRUMENTATION DIAGRAM-II

WBS NUMBER	FOR CITY OF HOUSTON USE ONLY
R-000267-00178-3	
DRAWING SCALE	
AS NOTED	
CITY OF HOUSTON PM	
TAHA LOTIA	
SHEET NO. 95 OF 268	

SM-I-2

PLOTTED: 3/26/2026 6:07 PM

FILE PATH: O:\H8109_Lift Station Rehabilitation And Reconstruction (Tetratech)\6 Drawings\Instrumentation And Control\Working\Shady Maples\H8109_LIFT_CAD.dwg

PLOTTED: 3/26/2026 6:07 PM
FILE PATH: O:\H8109_Lift Station Rehabilitation And Reconstruction (Tetratech)\6 Drawings\Instrumentation And Control\Working\Shady Maples\SHEET\SM-I-03.dwg

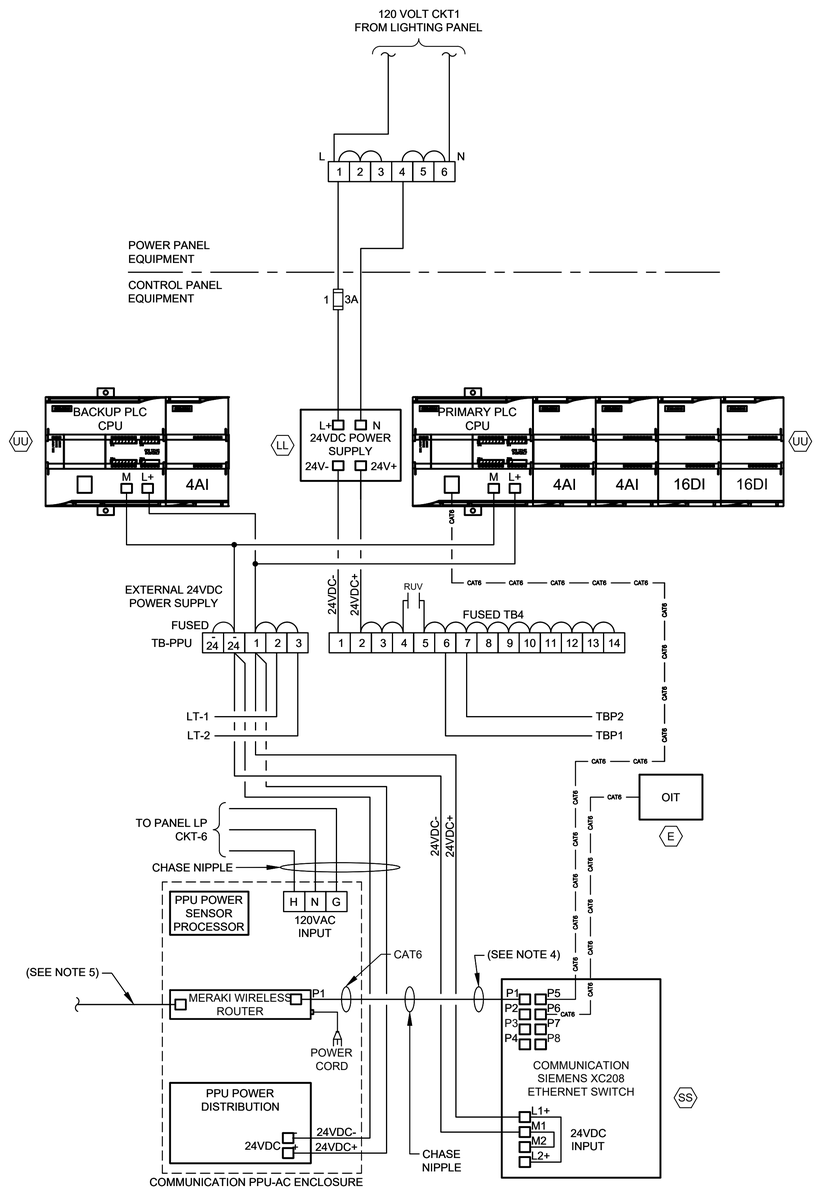

CONTROL POWER &
COMMUNICATIONS WIRING

DIAGRAM

NTS

(SEE NOTE 2 & 6)

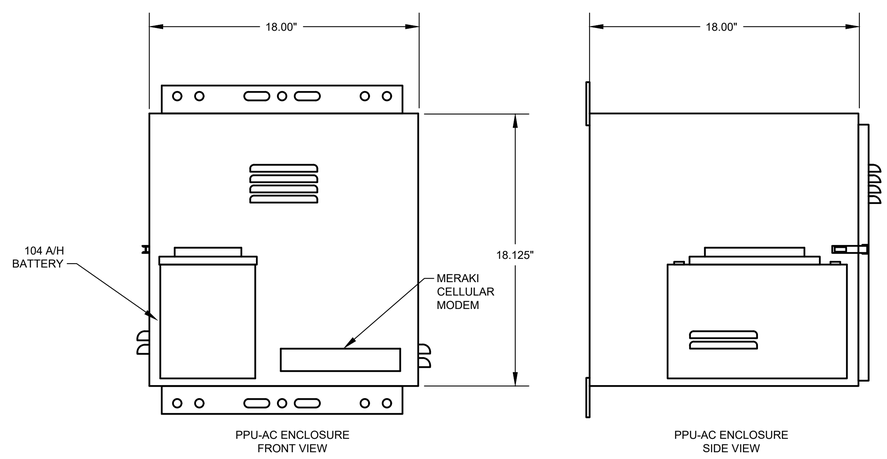

PPU-AC
CONTROL ENCLOSURE

ELEVATION

NTS

(SEE NOTE 7)

NOTES:

1. FOR DESCRIPTION AND RATINGS OF ITEMS INDICATED WITH ITEM TAG, SEE DEVICE RATINGS SCHEDULE.
2. REFER TO SPEC SECTION 16120 FOR CONDUCTOR COLOR CODE.
3. THE PLC POWER SUPPLY SHALL FEED THE 24VDC I/O.
4. ETHERNET CABLE FOR MERAKI CELLULAR ROUTER (P1).
5. CAT6 POE CABLE TO RADIO.
6. COMMUNICATION PPU-AC & SCADA SHALL BE PROVIDED BY CONTRACTOR INCLUDING TO RUN CONDUITS & WIRES.
7. COORDINATE WITH VENDOR TO PROVIDE PROPER VENTILATION WHERE APPLICABLE.

GENERAL NOTES:

1. NO ELECTRICAL MATERIAL, APPARATUS, DEVICES, APPLIANCES, FIXTURES, OR EQUIPMENT SHALL BE SOLD OR INSTALLED IN THE CITY UNLESS THEY ARE IN CONFORMANCE WITH THE PROVISIONS OF SECTION 508 CITY OF HOUSTON ELECTRICAL CODE, THE LAWS OF THE STATE OF TEXAS AND ANY APPLICABLE RULES AND REGULATIONS ISSUED UNDER THE AUTHORITY OF THE STATE STATUES. THE MAKER'S NAME, TRADEMARK, OR OTHER IDENTIFICATION SYMBOL SHALL BE PLACED ON ALL ELECTRICAL MATERIALS, APPARATUS, DEVICES, APPLIANCES, FIXTURES, AND EQUIPMENT USED OR INSTALLED UNDER THE PROVISIONS OF THIS CODE. ALL ELECTRICAL MATERIALS AND EQUIPMENT SHALL BE LISTED AND LABELED FOR THE INTENDED USE AND SHALL BE INCLUDED IN A LIST PUBLISHED BY AN APPROVAL AGENCY.

NO.	DATE	REVISION	APP.
	MM/DD/YY	BRIEF DESCRIPTION	XXX
	MM/DD/YY	BRIEF DESCRIPTION	XXX
	MM/DD/YY	BRIEF DESCRIPTION	XXX

A TETRA TECH COMPANY
Texas PE Firm Reg. #F-929
575 N. Dairy Ashford, Suite 700,
Houston, Texas 77079
T +1 281 589 7257
E usinfrastructure@rpsgroup.com

SURVEYED BY:
FB NO. F-4578

FOR INTERIM REVIEW ONLY NOT INTENDED FOR PERMIT, BIDDING OR CONSTRUCTION PURPOSES.
ENGINEER:
HOSS FOROUZAN
P.E. SERIAL NO.77748
03/30/2026

CITY OF HOUSTON
HOUSTON PUBLIC WORKS

RECONSTRUCTION & REHABILITATION
COH LIFT STATIONS

SHADY MAPLES LIFT STATION COMMUNICATION DIAGRAM

WBS NUMBER	FOR CITY OF HOUSTON USE ONLY
R-000267-00178-3	
DRAWING SCALE	
AS NOTED	
CITY OF HOUSTON PM	
TAHA LOTIA	
SHEET NO. 96 OF 268	

SM-I-3

PLOTTED: 3/26/2026 6:07 PM
FILE PATH: O:\H8109_Lift Station Rehabilitation And Reconstruction (Tetratech)\6 Drawings\Instrumentation And Control\Working\Shady Maples\SHADY MAPLES LIFT STATION - IC604.dwg

EQUIPMENT AND DEVICE SCHEDULE

ITEM	QUANTITY	DESCRIPTION
A	1	PANEL BOARD, 120/240V, 1 PHASE, 3 WIRE, 100A, 12 CKTS
B	2	FULL VOLTAGE, NON-REVERSING, SINGLE SPEED, AUTOMATIC MOTOR STARTER W/120 VOLT CONTROL COIL, NEMA SIZE AS SCHEDULED.
C	2	TIME DELAY RELAY WITH THREE FORM C CONTACTS, 120VAC COIL AND 11 PIN SOCKET BASE.
D	1	SINGLE CHANNEL INTRINSICALLY SAFE RELAY
E	1	PROGRAMMING SCREEN (OIT)
F	2	HAND-OFF-AUTO SWITCH, 3 POSITION, HEAVY-DUTY, OILTIGHT WITH 2 SETS OF CONTACT BLOCKS (PUMP CONTROL)
G	2	INDICATING LIGHT, HEAVY DUTY, OILTIGHT, RED, 24 VDC, LED, WITH "RUN" LEGEND
H	1	PERPETUAL POWER UNIT (PPU)
I	1	PUMP ALARM RESET PUSHBUTTON
J	2	SWITCH FOR CABINET LIGHT, 120V, 20A, SPST
K	3	DUPLEX RECEPTACLE, 120V, 20A, 2 WIRE, GROUNDED
L	2	24" LED STRIP LIGHT 120V SUITABLE FOR ZERO DEGREE OPERATION.
M	1	SURGE PROTECTOR - INCOMING POWER
N	*	NOT USED.
P	2	CURRENT TRANSFORMER, RATIO AS SCHEDULED W/4-20mA OUTPUT.
Q	12	TERMINAL BLOCKS, SIZED FOR MOTOR POWER REQUIREMENTS
R	*	RELAY WITH THREE FORM C CONTACTS, AND 11 PIN SOCKET BASE
S	*	NOT USED.
T	*	NAMEPLATES, SEE SPECIFICATIONS (SEE NAMEPLATE SCHEDULE)
U	2	SOLID STATE MOTOR OVERLOAD RELAY
V	6	FUSE HOLDER & FUSES - PHASE FAILURE
W	1	NEMA 3R GASKETED ALUMINUM ENCLOSURE WITHOUT VENTS 72"H x 48"W x 36"D
X	1	DOOR MOUNTED ROTARY HANDLE DISCONNECT SWITCH (SUITABLE FOR ENVIRONMENT)
Y	1	THERMAL-MAGNETIC MOLDED CASE MAIN CIRCUIT BREAKER, SIZE AS SCHEDULED
Z	2	ADJUSTABLE INSTANTENOUS TRIP MOTOR CIRCUIT PROTECTOR, SIZE AS SCHEDULED
AA	*	TERMINAL BLOCKS
BB	2	EXTERNAL OVERLOAD RESET PUSHBUTTON MECHANISM
CC	2	ANALOG I/O SURGE SUPPRESSOR
DD	1	WIRE DUCT 2" WIDE x 2" DEEP MINIMUM
EE	1	THERMAL-MAGNETIC MODLED CASE CIRCUIT BREAKER FOR LIGHTING TRANSFORMER, SIZE AS SCHEDULED
FF	1	GROUND BUS
GG	1	25 KVA, 480 - 240/120V,1ϕ, 3W DRY TYPE NEMA 3R ENCLOSURE TRANSFORMER (PAD MOUNTED)
HH	*	NOT USED.
II	1	120VAC - 24VAC POWER SUPPLY (AS REQUIRED)
JJ	11	CARTRIDGE FUSES & FUSE HOLDER
KK	8	QUARTER TURN CAPTIVE DOOR CLOSURE
LL	1	120VAC - 24VDC PLC POWER SUPPLY 5A
MM	2	MOTION SWITCH
NN	*	NOT USED
PP	2	INDICATING LED LIGHT, HEAVY DUTY, OILTIGHT, GREEN, 24 VDC, LED WITH " PRIMARY PLC" & "BACKUP PLC" LEGEND
QQ	*	NOT USED
RR	*	NOT USED
SS	1	COMMUNICATION ETHERNET SWITCH
TT	1	POWER SURGE PROTECTOR - CONTROL POWER
UU	2	PROGRAMMABLE LOGIC CONTROLLER WITH EXPANSION UNIT
VV	1	PHASE AND UNDER VOLTAGE MONITOR
WW	*	FUSED TERMINAL BLOCKS
XX	2	PUMP PROTECTION MODULE RATED FOR CLASS I, DIVISION I
YY	2	ANALOG SIGNAL ISOLATOR
ZZ	-	NOT USED
AB	-	NOT USED.
AC	1	POWER DISTRIBUTION BLOCK
AD	1	NEUTRAL LUG
AE	1	6" EXHAUST FAN, 120V, STAINLESS FILTERS & GRILL PACKAGE W/BUG GUARD
AF	1	T-STAT FOR EXHAUST FAN

* - AS SCHEDULED

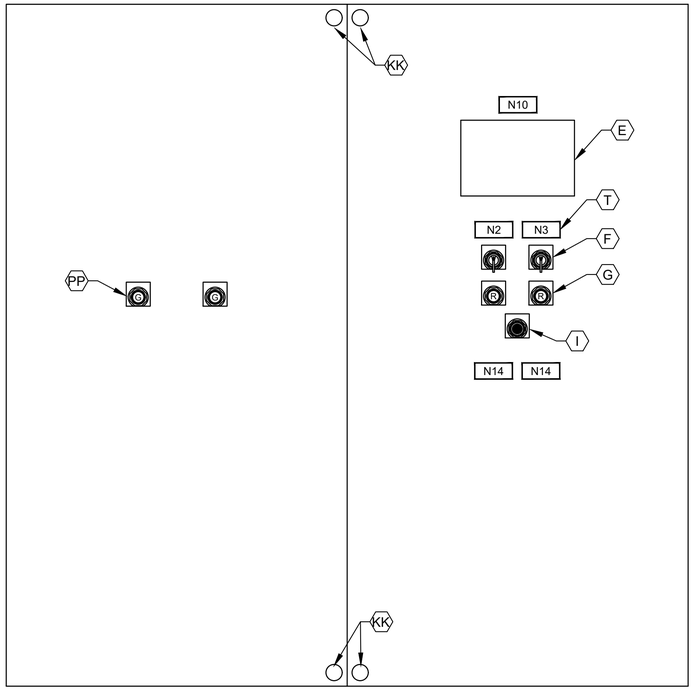

CONTROL PANEL FRONT INNER DOOR

ELEVATION

NTS

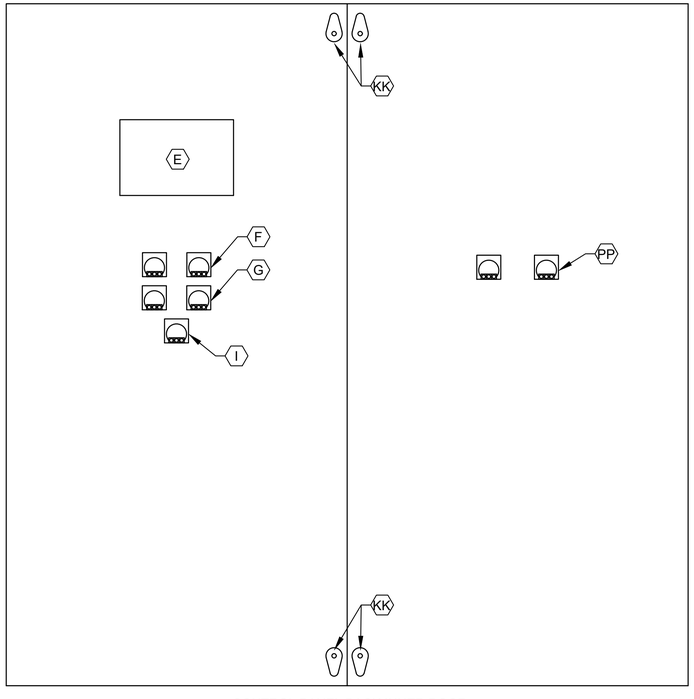

CONTROL PANEL BACK INNER DOOR

ELEVATION

NTS

NOTES:

1. NAMEPLATES SHALL BE MOUNTED TO PANELS USING STAINLESS STEEL HARDWARE.
2. REFER SPECIFICATIONS FOR ALL PANEL COMPONENTS.

GENERAL NOTES:

1. NO ELECTRICAL MATERIAL, APPARATUS, DEVICES, APPLIANCES, FIXTURES, OR EQUIPMENT SHALL BE SOLD OR INSTALLED IN THE CITY UNLESS THEY ARE IN CONFORMANCE WITH THE PROVISIONS OF SECTION 508 CITY OF HOUSTON ELECTRICAL CODE, THE LAWS OF THE STATE OF TEXAS AND ANY APPLICABLE RULES AND REGULATIONS ISSUED UNDER THE AUTHORITY OF THE STATE STATUES. THE MAKER'S NAME, TRADEMARK, OR OTHER IDENTIFICATION SYMBOL SHALL BE PLACED ON ALL ELECTRICAL MATERIALS, APPARATUS, DEVICES, APPLIANCES, FIXTURES, AND EQUIPMENT USED OR INSTALLED UNDER THE PROVISIONS OF THIS CODE. ALL ELECTRICAL MATERIALS AND EQUIPMENT SHALL BE LISTED AND LABELED FOR THE INTENDED USE AND SHALL BE INCLUDED IN A LIST PUBLISHED BY AN APPROVAL AGENCY.

NO.	DATE	REVISION	APP.
	MM/DD/YY	BRIEF DESCRIPTION	XXX
	MM/DD/YY	BRIEF DESCRIPTION	XXX
	MM/DD/YY	BRIEF DESCRIPTION	XXX

RPS A TETRA TECH COMPANY
Texas PE Firm Reg. #F-929
575 N. Dairy Ashford, Suite 700,
Houston, Texas 77079
T +1 281 589 7257
E usinfrastructure@rpsgroup.com

SURVEYED BY:
FB NO. F-4578

FOR INTERIM REVIEW ONLY NOT INTENDED FOR PERMIT, BIDDING OR CONSTRUCTION PURPOSES.
ENGINEER:
HOSS FOROUZAN
P.E. SERIAL NO.77748
03/30/2026

CITY OF HOUSTON
HOUSTON PUBLIC WORKS

RECONSTRUCTION & REHABILITATION
COH LIFT STATIONS

SHADY MAPLES LIFT STATION CONTROL CABINET EQUIP. LAYOUT & SCHEDULE

WBS NUMBER	FOR CITY OF HOUSTON USE ONLY
R-000267-00178-3	
DRAWING SCALE	
AS NOTED	
CITY OF HOUSTON PM	
TAHA LOTIA	
SHEET NO. 97 OF 268	

SM-I-4

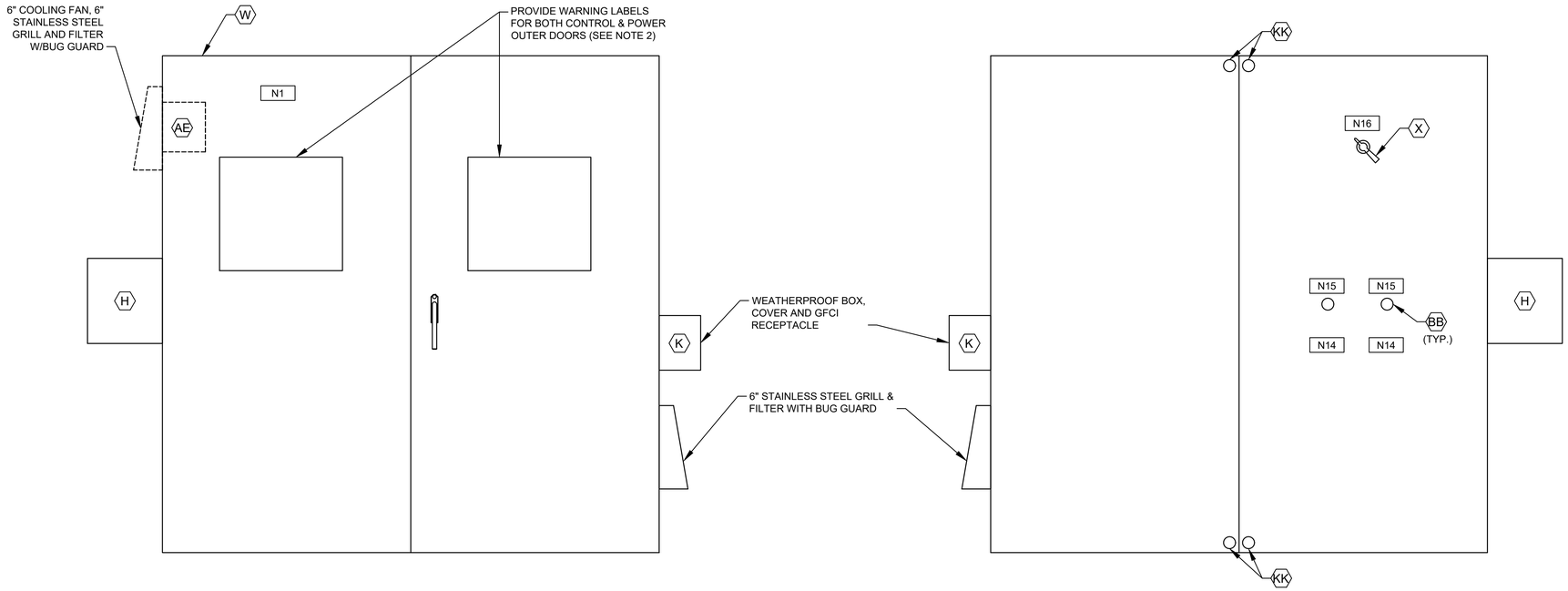

CONTROL CABINET (CONTROL SIDE)
OUTER DOOR

ELEVATION

NTS

CONTROL CABINET (POWER SIDE)
INNER DOOR

ELEVATION

NTS

(SEE NOTE 1)

NAMEPLATE SCHEDULE

DESIGNATION	ENGRAVED	DESIGNATION	ENGRAVED
N1	PUMP STATION DESIGNATION	N8	NOT USED.
N2	PUMP NO. 1	N9	NOT USED.
N3	PUMP NO. 2	N10	PROGRAMMING SCREEN
N4	NOT USED.	N11	NOT USED.
N5	NOT USED.	N12	PRIMARY PLC
N6	NOT USED.	N13	BACKUP PLC
N7	NOT USED.	N14	MOTOR DATA
			HORSEPOWER (OUTPUT) ----------
			RPM AT FULL LOAD ----------
			TIME RATING ----------
			FREQUENCY ----------
			NUMBER OF PHASES ----------
			MODEL NUMBER ----------
			RATED VOLTAGE ----------
			SERVICE FACTOR ----------
			FULL LOAD AMPS ----------
			INSULATION CLAS ----------
			NEMA DESIGN LETTER ----------
			TEMPERATURE RISE ----------
			NEMA FRAME SIZE ----------
			DATE OF MANUFACTURE ----------
			THERMO PROTECTION (IF REQUIRED) --
			MOISTURE PROTECTION (IF REQUIRED)-
		N15	EXTERNAL OVERLOAD RESET PUSH BUTTON MECHANISM
		N16	MAIN BREAKER

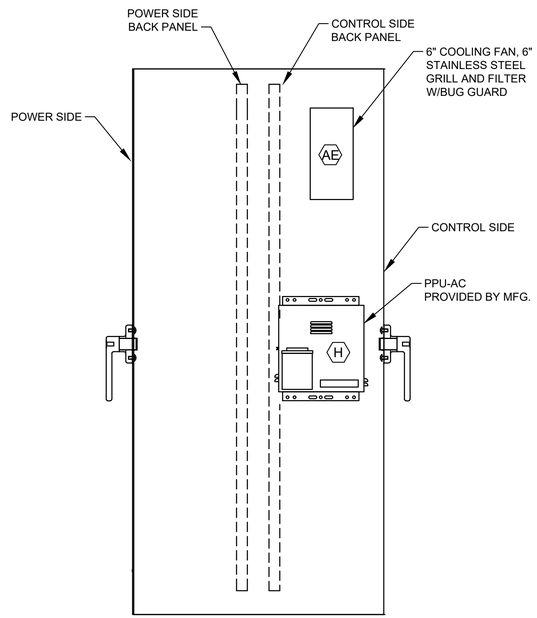

CONTROL CABINET (LEFT SIDE VIEW)

ELEVATION

NTS

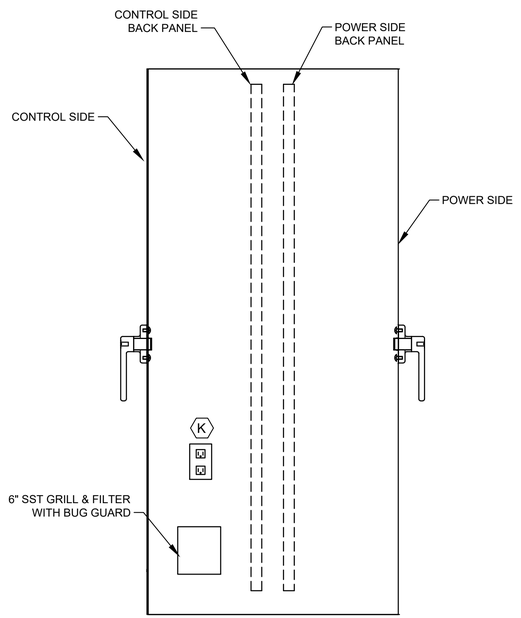

CONTROL CABINET (RIGHT SIDE VIEW)

ELEVATION

NTS

NOTES:

1. SEE SHEET SM-I4 FOR EQUIPMENT SCHEDULE.
2. REFER TO NEC SECTIONS 110.16 & 110.21

GENERAL NOTES:

1. NO ELECTRICAL MATERIAL, APPARATUS, DEVICES, APPLIANCES, FIXTURES, OR EQUIPMENT SHALL BE SOLD OR INSTALLED IN THE CITY UNLESS THEY ARE IN CONFORMANCE WITH THE PROVISIONS OF SECTION 508 CITY OF HOUSTON ELECTRICAL CODE, THE LAWS OF THE STATE OF TEXAS AND ANY APPLICABLE RULES AND REGULATIONS ISSUED UNDER THE AUTHORITY OF THE STATE STATUES. THE MAKER'S NAME, TRADEMARK, OR OTHER IDENTIFICATION SYMBOL SHALL BE PLACED ON ALL ELECTRICAL MATERIALS, APPARATUS, DEVICES, APPLIANCES, FIXTURES, AND EQUIPMENT USED OR INSTALLED UNDER THE PROVISIONS OF THIS CODE. ALL ELECTRICAL MATERIALS AND EQUIPMENT SHALL BE LISTED AND LABELED FOR THE INTENDED USE AND SHALL BE INCLUDED IN A LIST PUBLISHED BY AN APPROVAL AGENCY.

NO.	DATE	REVISION	APP.
	MM/DD/YY	BRIEF DESCRIPTION	XXX
	MM/DD/YY	BRIEF DESCRIPTION	XXX
	MM/DD/YY	BRIEF DESCRIPTION	XXX

RPS A TETRA TECH COMPANY
Texas PE Firm Reg. #F-929
575 N. Dairy Ashford, Suite 700,
Houston, Texas 77079
T +1 281 589 7257
E usinfrastructure@rpsgroup.com

SURVEYED BY:
FB NO. F-4578

FOR INTERIM REVIEW ONLY NOT INTENDED FOR PERMIT, BIDDING OR CONSTRUCTION PURPOSES.
ENGINEER:
HOSS FOROUZAN
P.E. SERIAL NO.77748
03/30/2026

CITY OF HOUSTON
HOUSTON PUBLIC WORKS

RECONSTRUCTION & REHABILITATION
COH LIFT STATIONS

SHADY MAPLES LIFT STATION CONTROL CABINET EQUIPMENT LAYOUT–I

WBS NUMBER	FOR CITY OF HOUSTON USE ONLY
R-000267-00178-3	
DRAWING SCALE	
AS NOTED	
CITY OF HOUSTON PM	
TAHA LOTIA	
SHEET NO. 98 OF 268	

SM–I–5

PLOTTED: 3/26/2026 6:07 PM
FILE PATH: O:\H8109_Lift Station Rehabilitation And Reconstruction (Tetratech)\6 Drawings\Instrumentation And Control\Working\Shady Maples\SHADY MAPLES LIFT STATION - I-GA5.dwg

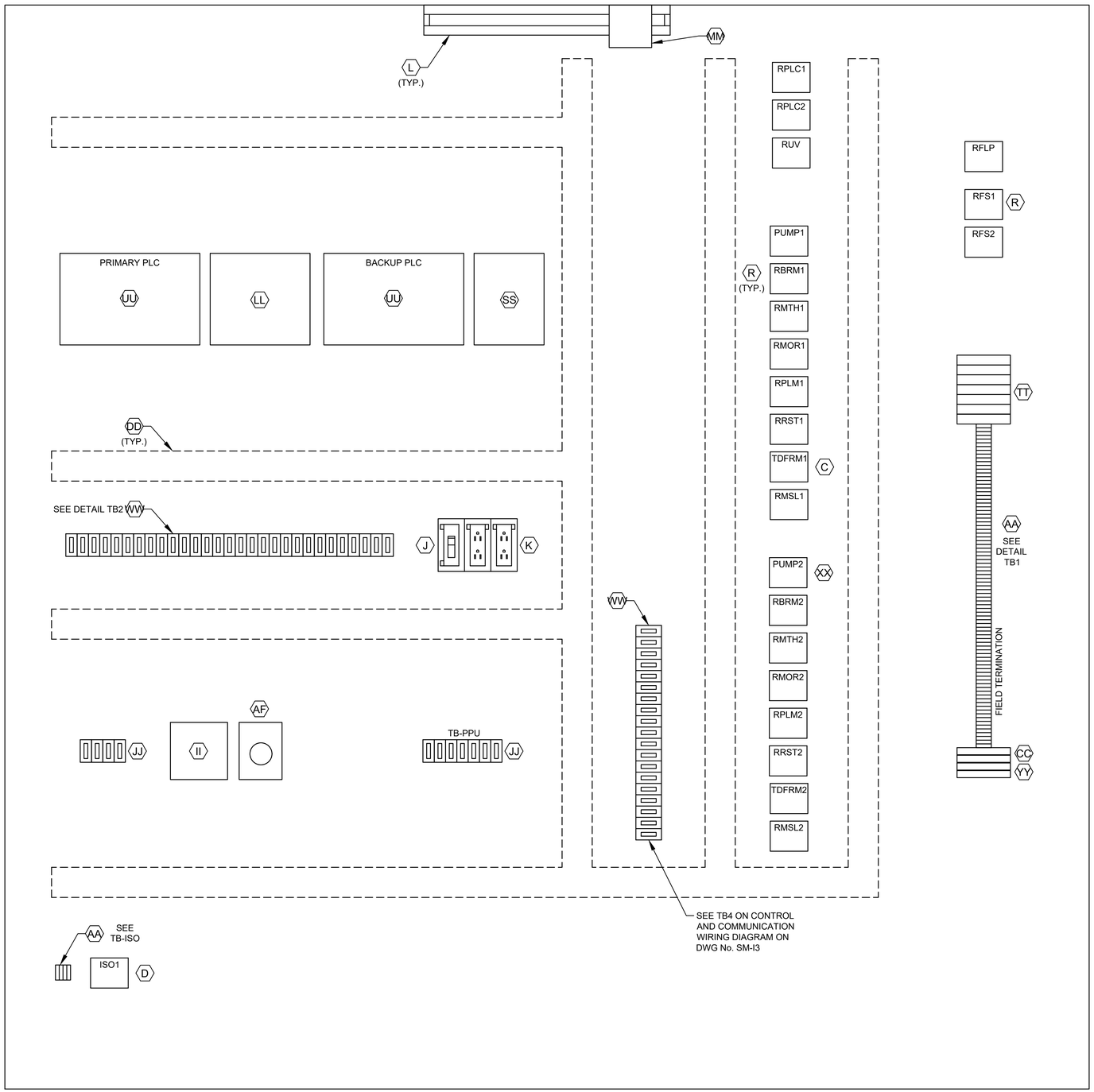

CONTROL PANEL
ELEVATION

DETAIL TB1
L1A
L1N
SPARE
3
3N
49
50
51
52
53
54
1004
1
24V-
24V-
1002
2
11
1001
1001A
12
1003
1003A
1002
1004
18
3N
19
20
36
36N
41
42
43
44
SPARE
L1A
L1N
103
104
105
106
107
108
110
113
115
116
119
SPARE
203
204
205
206
207
208
210
213
215
216
219

ALL L AND N FOR EACH PUMP CONTROL TO BE FUSED

DETAIL TB2
36A
37A
50
52
54
52A
54A
L+
M
35B
38B
41B
47B
13B
13AB
13GB
L+
M
14B
14AB
14GB
L+
M
13
13A
13G
14
14A
14G
SPARE
18
SPARE
28
29
32
35B
33
42
44
SPARE
103
104
115
109
110
118
120
121
122
123
SPARE
209
210
211
218
220
222
223

DETAIL TB-ISO
1500
1501
1503
1504

LEGEND	
TAG	DESCRIPTION
RMTH	MOTOR HIGH TEMPERATURE ALARM RELAY
RPLM	PLC PUMP RUN RELAY
RRST	PUMP RESET AUX RELAY
RPLC	PLC MODE AUX RELAY
RMOR	MOTOR OVERLOAD ALARM RELAY
RBRM	BACKUP SYSTEM RUN RELAY
RUV	UNDER VOLTAGE RELAY
ISO	INTRINSICALLY SAFE RELAY
RFS	PUMP RUN FLOAT SWITCH RELAY
TDFRM	TIMER FLOAT SWITCH RUN RELAY
RMSL	MOTOR SEAL LEAK ALARM RELAY
RFLP	FLOAT LOCKOUT PUMP RELAY

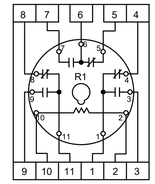

RELAY DETAIL
ITEM R

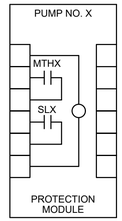

PUMP PROTECTION MODULE
DETAIL, ITEM XX

NOTE: REPLACE "X" WITH APPROPRIATE PUMP NO.

NOTES:

1. SEE SHEET SM-I4 FOR EQUIPMENT SCHEDULE.

GENERAL NOTES:

1. NO ELECTRICAL MATERIAL, APPARATUS, DEVICES, APPLIANCES, FIXTURES, OR EQUIPMENT SHALL BE SOLD OR INSTALLED IN THE CITY UNLESS THEY ARE IN CONFORMANCE WITH THE PROVISIONS OF SECTION 508 CITY OF HOUSTON ELECTRICAL CODE, THE LAWS OF THE STATE OF TEXAS AND ANY APPLICABLE RULES AND REGULATIONS ISSUED UNDER THE AUTHORITY OF THE STATE STATUES. THE MAKER'S NAME, TRADEMARK, OR OTHER IDENTIFICATION SYMBOL SHALL BE PLACED ON ALL ELECTRICAL MATERIALS, APPARATUS, DEVICES, APPLIANCES, FIXTURES, AND EQUIPMENT USED OR INSTALLED UNDER THE PROVISIONS OF THIS CODE. ALL ELECTRICAL MATERIALS AND EQUIPMENT SHALL BE LISTED AND LABELED FOR THE INTENDED USE AND SHALL BE INCLUDED IN A LIST PUBLISHED BY AN APPROVAL AGENCY.

NOTES:

1. SEE SHEET I-095-603 FOR EQUIPMENT SCHEDULE.

NO.	DATE	REVISION	APP.
	MM/DD/YY	BRIEF DESCRIPTION	XXX
	MM/DD/YY	BRIEF DESCRIPTION	XXX
	MM/DD/YY	BRIEF DESCRIPTION	XXX

RPS
A TETRA TECH COMPANY
Texas PE Firm Reg. #F-929
575 N. Dairy Ashford, Suite 700,
Houston, Texas 77079
T +1 281 589 7257
E usinfrastructure@rpsgroup.com

SURVEYED BY:
FB NO. F-4578

FOR INTERIM REVIEW ONLY NOT INTENDED FOR PERMIT, BIDDING OR CONSTRUCTION PURPOSES.
ENGINEER:
HOSS FOROUZAN
P.E. SERIAL NO.77748
03/30/2026

CITY OF HOUSTON
HOUSTON PUBLIC WORKS

RECONSTRUCTION & REHABILITATION
COH LIFT STATIONS

SHADY MAPLES LIFT STATION CONTROL CABINET EQUIPMENT LAYOUT–II

WBS NUMBER	FOR CITY OF HOUSTON USE ONLY
R-000267-00178-3	
DRAWING SCALE	
AS NOTED	
CITY OF HOUSTON PM	
TAHA LOTIA	
SHEET NO. 99 OF 268	

SM–I–6

PLOTTED: 3/26/2026 6:07 PM
FILE PATH: O:\H8109_Lift Station Rehabilitation And Reconstruction (Tetratech)\6 Drawings\Instrumentation And Control\Working\Shady Maples\SHADY MAPLES CONTROL CABINET EQUIPMENT LAYOUT-II.dwg

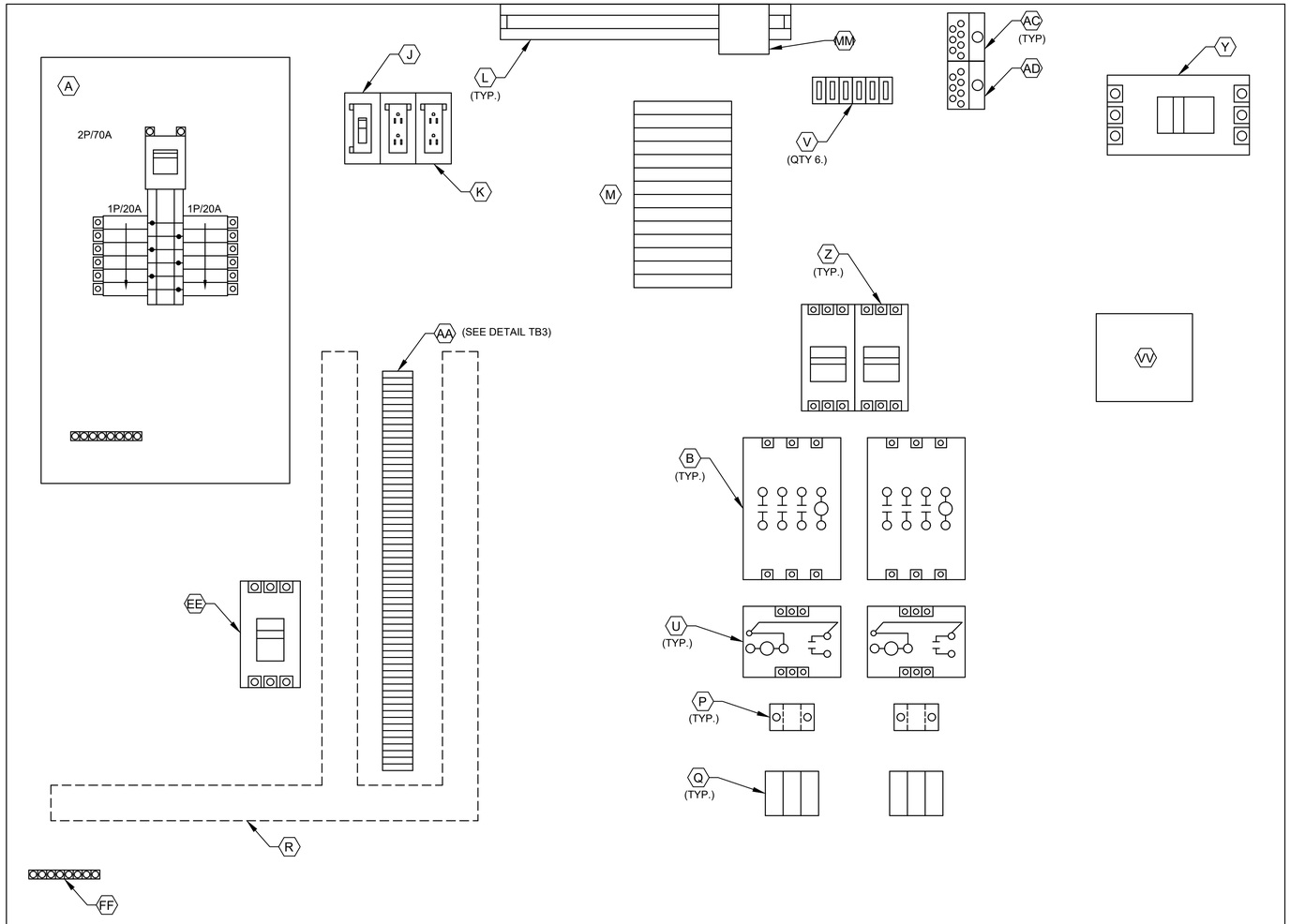

POWER PANEL
ELEVATION

3
18
L1A
L1N
SPARE
SPARE
103
104
105
106
107
108
110
113
115
116
119
SPARE
203
204
205
206
207
208
210
213
215
216
219
SPARE
SPARE
SPARE
SPARE
SPARE
SPARE
SPARE
SPARE
SPARE
SPARE

DETAIL TB3

NOTES:

1. SEE SHEET SM-I4 FOR EQUIPMENT SCHEDULE.

GENERAL NOTES:

1. NO ELECTRICAL MATERIAL, APPARATUS, DEVICES, APPLIANCES, FIXTURES, OR EQUIPMENT SHALL BE SOLD OR INSTALLED IN THE CITY UNLESS THEY ARE IN CONFORMANCE WITH THE PROVISIONS OF SECTION 508 CITY OF HOUSTON ELECTRICAL CODE, THE LAWS OF THE STATE OF TEXAS AND ANY APPLICABLE RULES AND REGULATIONS ISSUED UNDER THE AUTHORITY OF THE STATE STATUES. THE MAKER'S NAME, TRADEMARK, OR OTHER IDENTIFICATION SYMBOL SHALL BE PLACED ON ALL ELECTRICAL MATERIALS, APPARATUS, DEVICES, APPLIANCES, FIXTURES, AND EQUIPMENT USED OR INSTALLED UNDER THE PROVISIONS OF THIS CODE. ALL ELECTRICAL MATERIALS AND EQUIPMENT SHALL BE LISTED AND LABELED FOR THE INTENDED USE AND SHALL BE INCLUDED IN A LIST PUBLISHED BY AN APPROVAL AGENCY.

NO.	DATE	REVISION	APP.
	MM/DD/YY	BRIEF DESCRIPTION	XXX
	MM/DD/YY	BRIEF DESCRIPTION	XXX
	MM/DD/YY	BRIEF DESCRIPTION	XXX

RPS
A TETRA TECH COMPANY
Texas PE Firm Reg. #F-929
575 N. Dairy Ashford, Suite 700,
Houston, Texas 77079
T +1 281 589 7257
E usinfrastructure@rpsgroup.com

SURVEYED BY:
FB NO. F-4578

FOR INTERIM REVIEW ONLY NOT INTENDED FOR PERMIT, BIDDING OR CONSTRUCTION PURPOSES.
ENGINEER:
HOSS FOROUZAN
P.E. SERIAL NO.77748
03/30/2026

CITY OF HOUSTON
HOUSTON PUBLIC WORKS

RECONSTRUCTION & REHABILITATION
COH LIFT STATIONS

SHADY MAPLES LIFT STATION CONTROL CABINET EQUIPMENT LAYOUT–III

WBS NUMBER	FOR CITY OF HOUSTON USE ONLY
R-000267-00178-3	
DRAWING SCALE	
AS NOTED	
CITY OF HOUSTON PM	
TAHA LOTIA	
SHEET NO. 100 OF 268	

SM–I–7

PLOTTED: 3/26/2026 6:07 PM

FILE PATH: O:\H8109_Lift Station Rehabilitation And Reconstruction (Tetratech)\6 Drawings\Instrumentation And Control\Working\Shady Maples\SHEET SM-I-07.dwg

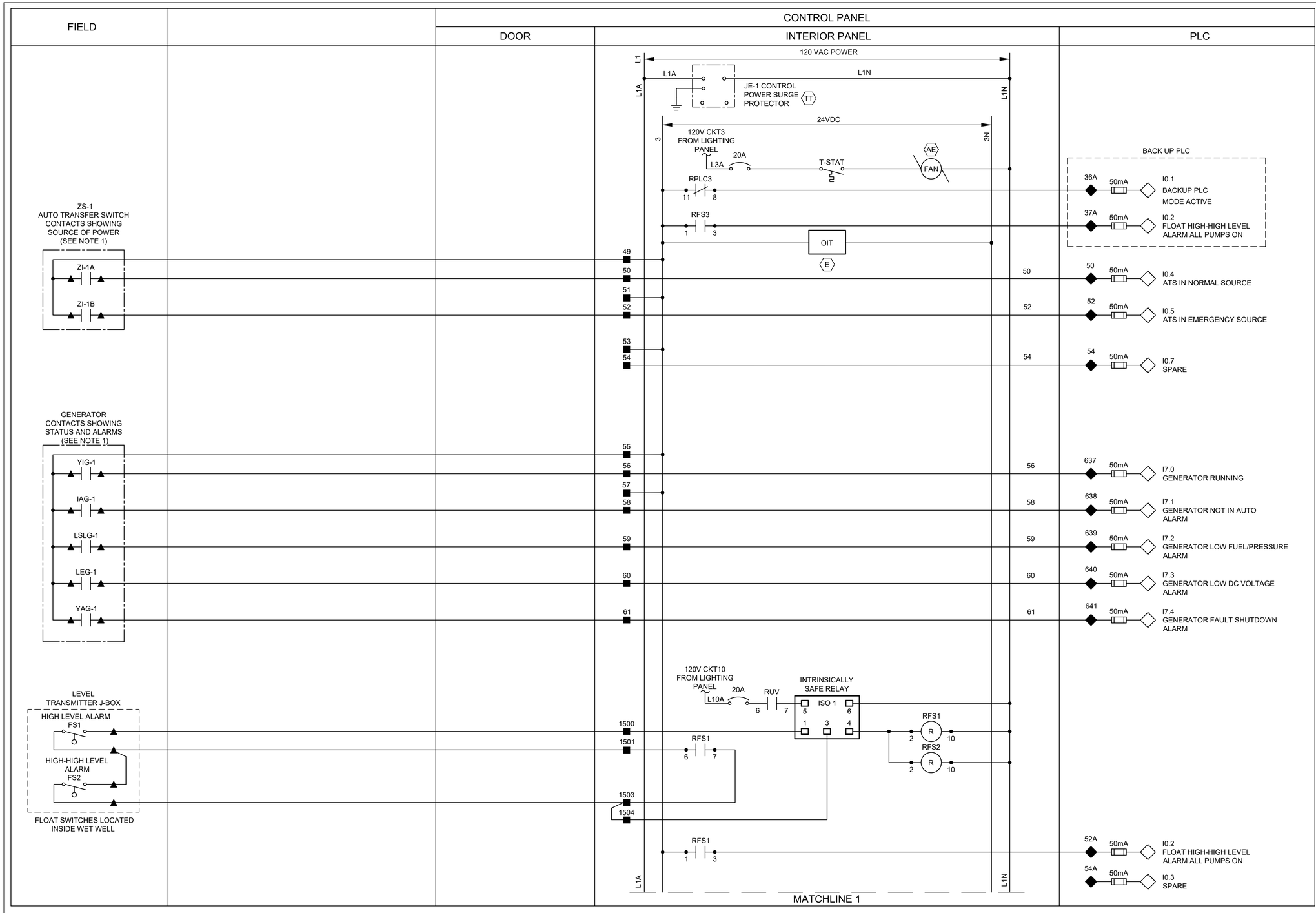

NOTES:

1. PROVIDE AUTO TRANSFER SWITCH DRY CONTACT.
2. ALL FLOAT CONTROL CIRCUIT WIRES COLOR SHALL BE YELLOW.

GENERAL NOTES:

1. NO ELECTRICAL MATERIAL, APPARATUS, DEVICES, APPLIANCES, FIXTURES, OR EQUIPMENT SHALL BE SOLD OR INSTALLED IN THE CITY UNLESS THEY ARE IN CONFORMANCE WITH THE PROVISIONS OF SECTION 508 CITY OF HOUSTON ELECTRICAL CODE, THE LAWS OF THE STATE OF TEXAS AND ANY APPLICABLE RULES AND REGULATIONS ISSUED UNDER THE AUTHORITY OF THE STATE STATUES. THE MAKER'S NAME, TRADEMARK, OR OTHER IDENTIFICATION SYMBOL SHALL BE PLACED ON ALL ELECTRICAL MATERIALS, APPARATUS, DEVICES, APPLIANCES, FIXTURES, AND EQUIPMENT USED OR INSTALLED UNDER THE PROVISIONS OF THIS CODE. ALL ELECTRICAL MATERIALS AND EQUIPMENT SHALL BE LISTED AND LABELED FOR THE INTENDED USE AND SHALL BE INCLUDED IN A LIST PUBLISHED BY AN APPROVAL AGENCY.

LEGEND

- △ DEVICE OR FIELD TERMINAL LOCATED AT MOTOR
- ✳ DEVICE OR FIELD TERMINAL LOCATED REMOTE
- □ DEVICE OR FIELD TERMINAL LOCATED AT MCC/POWER PANEL
- ■ FIELD TERMINAL LOCATED AT CONTROL PANEL
- ▲ REMOTE TERMINAL
- ● DEVICE TERMINAL NO.
- ◆ PLC INTERFACE TERMINAL

SM-I-8

NO.	DATE	REVISION	APP.
	MM/DD/YY	BRIEF DESCRIPTION	XXX
	MM/DD/YY	BRIEF DESCRIPTION	XXX
	MM/DD/YY	BRIEF DESCRIPTION	XXX

RPS
A TETRA TECH COMPANY
Texas PE Firm Reg. #F-929
575 N. Dairy Ashford, Suite 700,
Houston, Texas 77079
T +1 281 589 7257
E usinfrastructure@rpsgroup.com

SURVEYED BY:
FB NO. F-4578

FOR INTERIM REVIEW ONLY NOT INTENDED FOR PERMIT, BIDDING OR CONSTRUCTION PURPOSES.
ENGINEER:
HOSS FOROUZAN
P.E. SERIAL NO.77748
03/30/2026

CITY OF HOUSTON
HOUSTON PUBLIC WORKS

RECONSTRUCTION & REHABILITATION
COH LIFT STATIONS

SHADY MAPLES LIFT STATION CONTROL PANEL CONTROL WIRING DIAGRAM-I

WBS NUMBER	FOR CITY OF HOUSTON USE ONLY
R-000267-00178-3	
DRAWING SCALE	
AS NOTED	
CITY OF HOUSTON PM	
TAHA LOTIA	
SHEET NO. 101 OF 268	

PLOTTED: 3/26/2026 6:07 PM

FILE PATH: O:\H8109_Lift Station Rehabilitation And Reconstruction (Tetratech)\6 Drawings\Instrumentation And Control\Working\Shady Maples\SHADY MAPLES CONTROL WIRING DIAGRAM-I.dwg

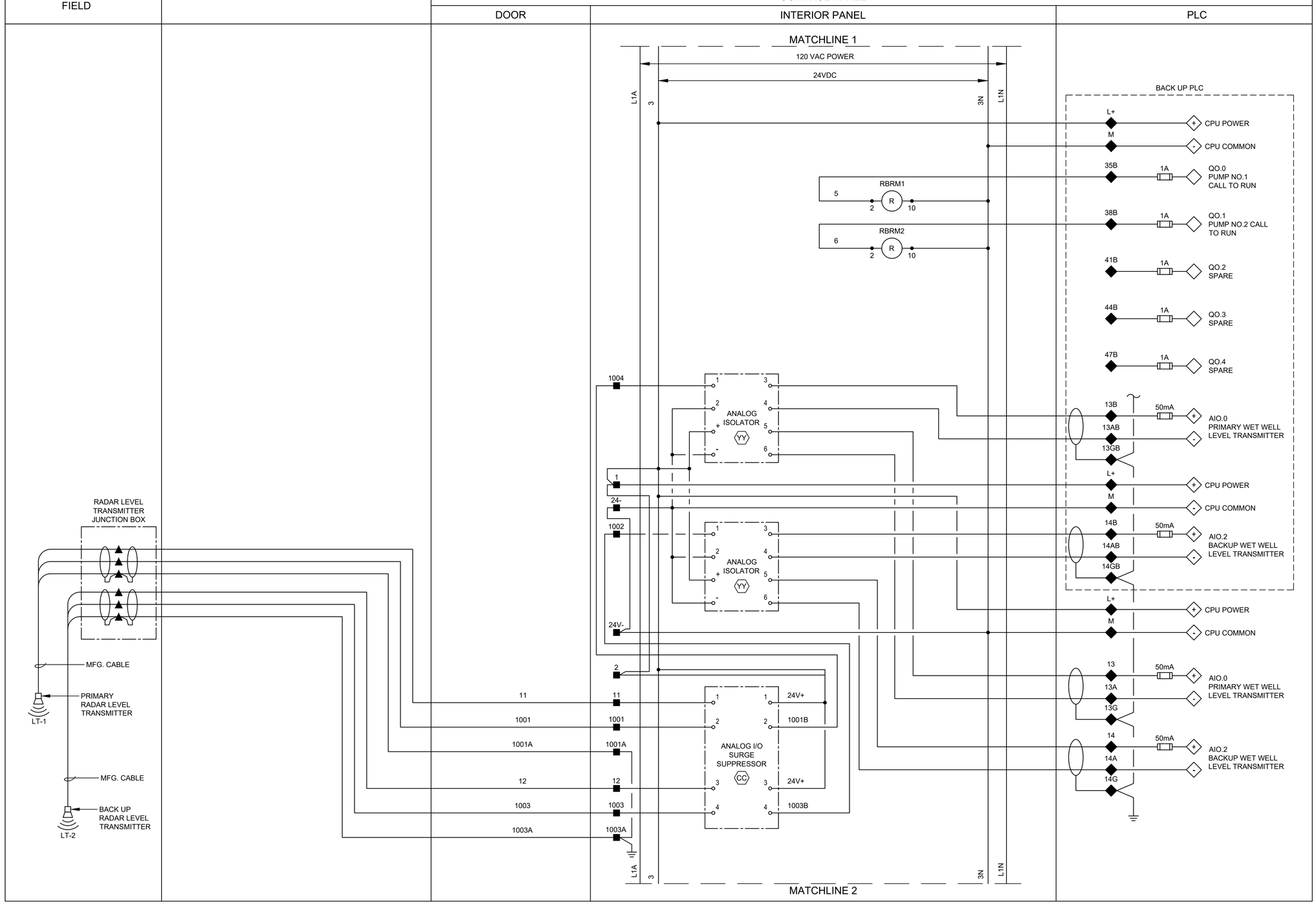

LEGEND

- △ DEVICE OR FIELD TERMINAL LOCATED AT MOTOR
- ✳ DEVICE OR FIELD TERMINAL LOCATED REMOTE
- □ DEVICE OR FIELD TERMINAL LOCATED AT MCC/POWER PANEL
- ■ FIELD TERMINAL LOCATED AT CONTROL PANEL
- ▲ REMOTE TERMINAL
- ● DEVICE TERMINAL NO.
- ◆ PLC INTERFACE TERMINAL

GENERAL NOTES:

1. NO ELECTRICAL MATERIAL, APPARATUS, DEVICES, APPLIANCES, FIXTURES, OR EQUIPMENT SHALL BE SOLD OR INSTALLED IN THE CITY UNLESS THEY ARE IN CONFORMANCE WITH THE PROVISIONS OF SECTION 508 CITY OF HOUSTON ELECTRICAL CODE, THE LAWS OF THE STATE OF TEXAS AND ANY APPLICABLE RULES AND REGULATIONS ISSUED UNDER THE AUTHORITY OF THE STATE STATUES. THE MAKER'S NAME, TRADEMARK, OR OTHER IDENTIFICATION SYMBOL SHALL BE PLACED ON ALL ELECTRICAL MATERIALS, APPARATUS, DEVICES, APPLIANCES, FIXTURES, AND EQUIPMENT USED OR INSTALLED UNDER THE PROVISIONS OF THIS CODE. ALL ELECTRICAL MATERIALS AND EQUIPMENT SHALL BE LISTED AND LABELED FOR THE INTENDED USE AND SHALL BE INCLUDED IN A LIST PUBLISHED BY AN APPROVAL AGENCY.

NO.	DATE	REVISION	APP.
	MM/DD/YY	BRIEF DESCRIPTION	XXX
	MM/DD/YY	BRIEF DESCRIPTION	XXX
	MM/DD/YY	BRIEF DESCRIPTION	XXX

rps
A TETRA TECH COMPANY
Texas PE Firm Reg. #F-929
575 N. Dairy Ashford, Suite 700,
Houston, Texas 77079
T +1 281 589 7257
E usinfrastructure@rpsgroup.com

FOR INTERIM REVIEW ONLY NOT INTENDED FOR PERMIT, BIDDING OR CONSTRUCTION PURPOSES.
ENGINEER:
HOSS FOROUZAN
P.E. SERIAL NO.77748
03/30/2026

SURVEYED BY:
FB NO. F-4578

CITY OF HOUSTON
HOUSTON PUBLIC WORKS

RECONSTRUCTION & REHABILITATION
COH LIFT STATIONS

SHADY MAPLES LIFT STATION CONTROL PANEL CONTROL WIRING DIAGRAM-II

WBS NUMBER	FOR CITY OF HOUSTON USE ONLY
R-000267-00178-3	
DRAWING SCALE	
AS NOTED	
CITY OF HOUSTON PM	
TAHA LOTIA	
SHEET NO. 102 OF 268	

SM-I-9

FILE PATH: O:\H8109_Lift Station Rehabilitation And Reconstruction (Tetratech)\6 Drawings\Instrumentation And Control\!Working\Shady Maples\HOUSTON-I-009.dwg PLOTTED: 3/26/2026 6:07 PM

FILE PATH: O:\H8109_Lift Station Rehabilitation And Reconstruction (Tetratech)\6 Drawings\Instrumentation And Control\Working\Shady Maples\SHADY MAPLES CONTROL WIRING DIAGRAM-III.dwg
PLOTTED: 3/26/2026 6:07 PM

FIELD	POWER PANEL	CONTROL PANEL		
		DOOR	INTERIOR PANEL	PLC

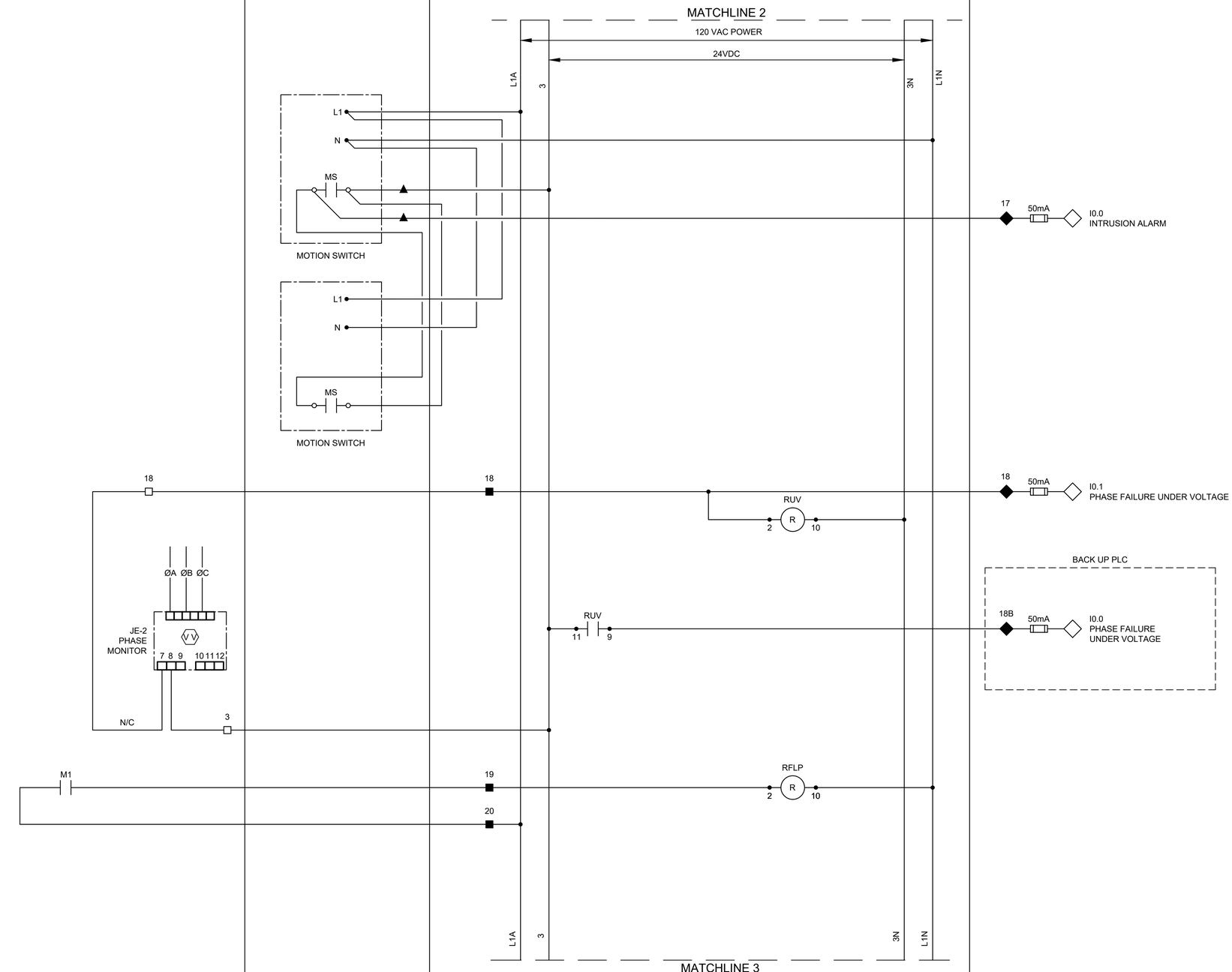

NOTES:

1. PROVIDE ONE LIMIT SWITCH PER EXTERIOR CONTROL PANEL AND POWER PANEL DOOR, WIRED IN PARALLEL.

GENERAL NOTES:

1. NO ELECTRICAL MATERIAL, APPARATUS, DEVICES, APPLIANCES, FIXTURES, OR EQUIPMENT SHALL BE SOLD OR INSTALLED IN THE CITY UNLESS THEY ARE IN CONFORMANCE WITH THE PROVISIONS OF SECTION 508 CITY OF HOUSTON ELECTRICAL CODE, THE LAWS OF THE STATE OF TEXAS AND ANY APPLICABLE RULES AND REGULATIONS ISSUED UNDER THE AUTHORITY OF THE STATE STATUES. THE MAKER'S NAME, TRADEMARK, OR OTHER IDENTIFICATION SYMBOL SHALL BE PLACED ON ALL ELECTRICAL MATERIALS, APPARATUS, DEVICES, APPLIANCES, FIXTURES, AND EQUIPMENT USED OR INSTALLED UNDER THE PROVISIONS OF THIS CODE. ALL ELECTRICAL MATERIALS AND EQUIPMENT SHALL BE LISTED AND LABELED FOR THE INTENDED USE AND SHALL BE INCLUDED IN A LIST PUBLISHED BY AN APPROVAL AGENCY.

LEGEND

- △ DEVICE OR FIELD TERMINAL LOCATED AT MOTOR
- ✳ DEVICE OR FIELD TERMINAL LOCATED REMOTE
- □ DEVICE OR FIELD TERMINAL LOCATED AT MCC/POWER PANEL
- ■ FIELD TERMINAL LOCATED AT CONTROL PANEL
- ▲ REMOTE TERMINAL
- ● DEVICE TERMINAL NO.
- ◆ PLC INTERFACE TERMINAL

NO.	DATE	REVISION	APP.
	MM/DD/YY	BRIEF DESCRIPTION	XXX
	MM/DD/YY	BRIEF DESCRIPTION	XXX
	MM/DD/YY	BRIEF DESCRIPTION	XXX

RPS
A TETRA TECH COMPANY
Texas PE Firm Reg. #F-929
575 N. Dairy Ashford, Suite 700,
Houston, Texas 77079
T +1 281 589 7257
E usinfrastructure@rpsgroup.com

SURVEYED BY:
FB NO. F-4578

FOR INTERIM REVIEW ONLY NOT INTENDED FOR PERMIT, BIDDING OR CONSTRUCTION PURPOSES.
ENGINEER:
HOSS FOROUZAN
P.E. SERIAL NO.77748
03/30/2026

CITY OF HOUSTON
HOUSTON PUBLIC WORKS

RECONSTRUCTION & REHABILITATION
COH LIFT STATIONS

SHADY MAPLES LIFT STATION CONTROL PANEL CONTROL WIRING DIAGRAM-III

WBS NUMBER	FOR CITY OF HOUSTON USE ONLY
R-000267-00178-3	
DRAWING SCALE	
AS NOTED	
CITY OF HOUSTON PM	
TAHA LOTIA	
SHEET NO. 103 OF 268	

SM-I-10

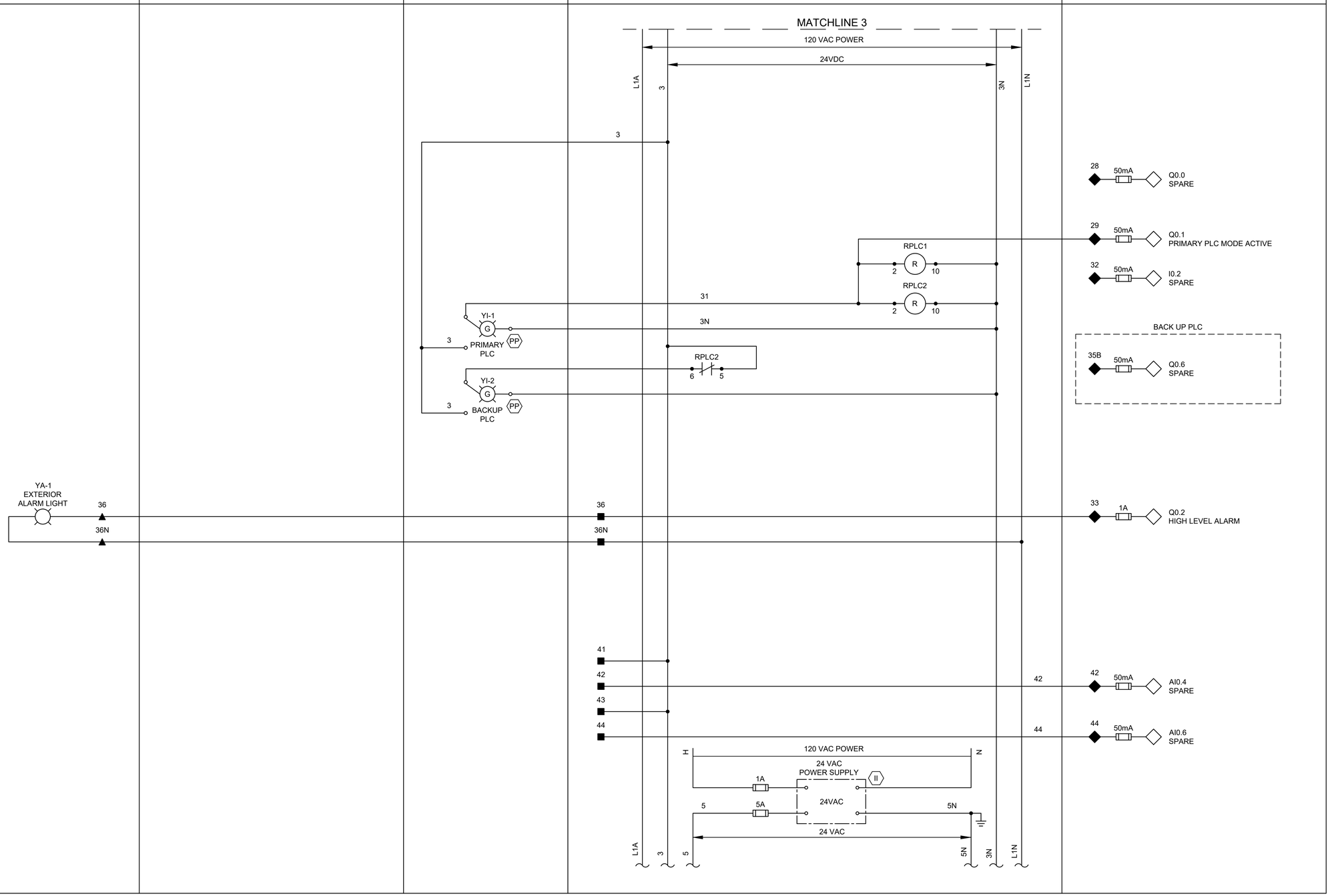

LEGEND

- △ DEVICE OR FIELD TERMINAL LOCATED AT MOTOR
- ✳ DEVICE OR FIELD TERMINAL LOCATED REMOTE
- □ DEVICE OR FIELD TERMINAL LOCATED AT MCC/POWER PANEL
- ■ FIELD TERMINAL LOCATED AT CONTROL PANEL
- ▲ REMOTE TERMINAL
- ● DEVICE TERMINAL NO.
- ◆ PLC INTERFACE TERMINAL

GENERAL NOTES:

1. NO ELECTRICAL MATERIAL, APPARATUS, DEVICES, APPLIANCES, FIXTURES, OR EQUIPMENT SHALL BE SOLD OR INSTALLED IN THE CITY UNLESS THEY ARE IN CONFORMANCE WITH THE PROVISIONS OF SECTION 508 CITY OF HOUSTON ELECTRICAL CODE, THE LAWS OF THE STATE OF TEXAS AND ANY APPLICABLE RULES AND REGULATIONS ISSUED UNDER THE AUTHORITY OF THE STATE STATUES. THE MAKER'S NAME, TRADEMARK, OR OTHER IDENTIFICATION SYMBOL SHALL BE PLACED ON ALL ELECTRICAL MATERIALS, APPARATUS, DEVICES, APPLIANCES, FIXTURES, AND EQUIPMENT USED OR INSTALLED UNDER THE PROVISIONS OF THIS CODE. ALL ELECTRICAL MATERIALS AND EQUIPMENT SHALL BE LISTED AND LABELED FOR THE INTENDED USE AND SHALL BE INCLUDED IN A LIST PUBLISHED BY AN APPROVAL AGENCY.

NO.	DATE	REVISION	APP.
	MM/DD/YY	BRIEF DESCRIPTION	XXX
	MM/DD/YY	BRIEF DESCRIPTION	XXX
	MM/DD/YY	BRIEF DESCRIPTION	XXX

rps
A TETRA TECH COMPANY
Texas PE Firm Reg. #F-929
575 N. Dairy Ashford, Suite 700, Houston, Texas 77079
T +1 281 589 7257
E usinfrastructure@rpsgroup.com

FOR INTERIM REVIEW ONLY NOT INTENDED FOR PERMIT, BIDDING OR CONSTRUCTION PURPOSES.
ENGINEER:
HOSS FOROUZAN
P.E. SERIAL NO.77748
03/30/2026

SURVEYED BY:
FB NO. F-4578

CITY OF HOUSTON
HOUSTON PUBLIC WORKS

RECONSTRUCTION & REHABILITATION
COH LIFT STATIONS

SHADY MAPLES LIFT STATION CONTROL PANEL CONTROL WIRING DIAGRAM–IV

WBS NUMBER	FOR CITY OF HOUSTON USE ONLY
R–000267–00178–3	
DRAWING SCALE	
AS NOTED	
CITY OF HOUSTON PM	
TAHA LOTIA	
SHEET NO. 104 OF 268	

SM–I–11

FILE PATH: O:\H8109_Lift Station Rehabilitation And Reconstruction (Tetratech)\6 Drawings\Instrumentation And Control\!Working\Shady Maples\HOUSTON-I-11.dwg
PLOTTED: 3/26/2026 6:07 PM

FIELD | POWER PANEL | CONTROL PANEL — DOOR | CONTROL PANEL — INTERIOR PANEL | PLC

120 VAC POWER
24 VDC
24 VAC
JE-2
TBP1 SEE NOTE 2
L1A
L1N
3N
5N
15
15N
6
3
11
12

HS-1A RESET
TO SHEET SM-I13
3P1

TSH-1 MOTOR TEMP SWITCH
LSH-1 SEAL LEAK DETECTOR
20
21
22
23

PUMP NO.1
M
T1
T2
T3
G
CT
M1
REFER TO SHEET E-4
TERMINAL JUNCTION BOX

U
MOR1

4-20mA CURRENT TRANSDUCER
IE-1
MOTOR OVERLOAD RELAY (MOR) (SEE NOTE 1)

101
102
104
105
106
107
108
103
115
116
110
112
111
113
114
120
119

RRST1
TO SHEET SM-I13

PUMP NO. 1 PROTECTION MODULE
LAH-1 SL1
TAH-1 MTH1
XX

RMSL1
RMTH1
RPLC1
RBRM1
RPLM1
TDFRM1
RFS1
TDFRM1
RMOR1

B
M
MOR1
ZS-1

YI-1
R
RUN
G

103	1A	Q0.4 ALARM RESET
104	50mA	I0.6 ALARM RESET
109	50mA	I1.1 PUMP NO.1 HIGH TEMP ALARM
122	50mA	AI0.8 PUMP NO.1 MOTOR CURRENT
123	50mA	I3.3 PUMP NO.1 MOTOR OVERLOAD
115	50mA	I3.0 PUMP NO.1 IN HAND
121	50mA	I3.1 PUMP NO.1 IN AUTO
118	1A	Q0.7 PUMP NO.1 PLC START/STOP
120	50mA	I1.0 PUMP NO.1 RUN
110	50mA	I3.2 PUMP NO.1 SEAL FAILURE ALARM

NOTES:

1. MOTOR OVERLOAD RELAY OUTPUT CONTACT SHOWN IS NORMALLY CLOSED WHEN RELAY IS DE-ENERGIZED, OPEN WHEN ENERGIZED, AND CLOSED WHEN IN ALARM. VERIFY OPERATION OF RELAY PROVIDED AND ADJUST CONNECTION OF RMOR AUXILIARY RELAYS.
2. FUSED TERMINAL ON TERMINAL BLOCK TB4 SEE CONTROL POWER AND COMMUNICATION WIRING DIAGRAM DRAWING NO. SM-I3.
3. ALL FLOAT CONTROL CIRCUIT WIRES COLOR SHALL BE YELLOW.

GENERAL NOTES:

1. NO ELECTRICAL MATERIAL, APPARATUS, DEVICES, APPLIANCES, FIXTURES, OR EQUIPMENT SHALL BE SOLD OR INSTALLED IN THE CITY UNLESS THEY ARE IN CONFORMANCE WITH THE PROVISIONS OF SECTION 508 CITY OF HOUSTON ELECTRICAL CODE, THE LAWS OF THE STATE OF TEXAS AND ANY APPLICABLE RULES AND REGULATIONS ISSUED UNDER THE AUTHORITY OF THE STATE STATUES. THE MAKER'S NAME, TRADEMARK, OR OTHER IDENTIFICATION SYMBOL SHALL BE PLACED ON ALL ELECTRICAL MATERIALS, APPARATUS, DEVICES, APPLIANCES, FIXTURES, AND EQUIPMENT USED OR INSTALLED UNDER THE PROVISIONS OF THIS CODE. ALL ELECTRICAL MATERIALS AND EQUIPMENT SHALL BE LISTED AND LABELED FOR THE INTENDED USE AND SHALL BE INCLUDED IN A LIST PUBLISHED BY AN APPROVAL AGENCY.

LEGEND

- △ DEVICE OR FIELD TERMINAL LOCATED AT MOTOR
- ✳ DEVICE OR FIELD TERMINAL LOCATED REMOTE
- □ DEVICE OR FIELD TERMINAL LOCATED AT MCC/POWER PANEL
- ■ FIELD TERMINAL LOCATED AT CONTROL PANEL
- ▲ REMOTE TERMINAL
- ● DEVICE TERMINAL NO.
- ◆ PLC INTERFACE TERMINAL

SM-I-12

NO.	DATE	REVISION	APP.
	MM/DD/YY	BRIEF DESCRIPTION	XXX
	MM/DD/YY	BRIEF DESCRIPTION	XXX
	MM/DD/YY	BRIEF DESCRIPTION	XXX

RPS A TETRA TECH COMPANY
Texas PE Firm Reg. #F-929
575 N. Dairy Ashford, Suite 700, Houston, Texas 77079
T +1 281 589 7257
E usinfrastructure@rpsgroup.com

SURVEYED BY:
FB NO. F-4578

FOR INTERIM REVIEW ONLY NOT INTENDED FOR PERMIT, BIDDING OR CONSTRUCTION PURPOSES.
ENGINEER:
HOSS FOROUZAN
P.E. SERIAL NO.77748
03/30/2026

CITY OF HOUSTON
HOUSTON PUBLIC WORKS

RECONSTRUCTION & REHABILITATION
COH LIFT STATIONS

SHADY MAPLES LIFT STATION PUMP NO.1 CONTROL WIRING DIAGRAM

WBS NUMBER	FOR CITY OF HOUSTON USE ONLY
R-000267-00178-3	
DRAWING SCALE	
AS NOTED	
CITY OF HOUSTON PM	
TAHA LOTIA	
SHEET NO. 105 OF 268	

PLOTTED: 3/26/2026 6:07 PM
FILE PATH: O:\H8109_Lift Station Rehabilitation And Reconstruction (Tetratech)\6 Drawings\Instrumentation And Control\Working\Shady Maples\SHADY MAPLES LIFT STATION-IGM2.dwg

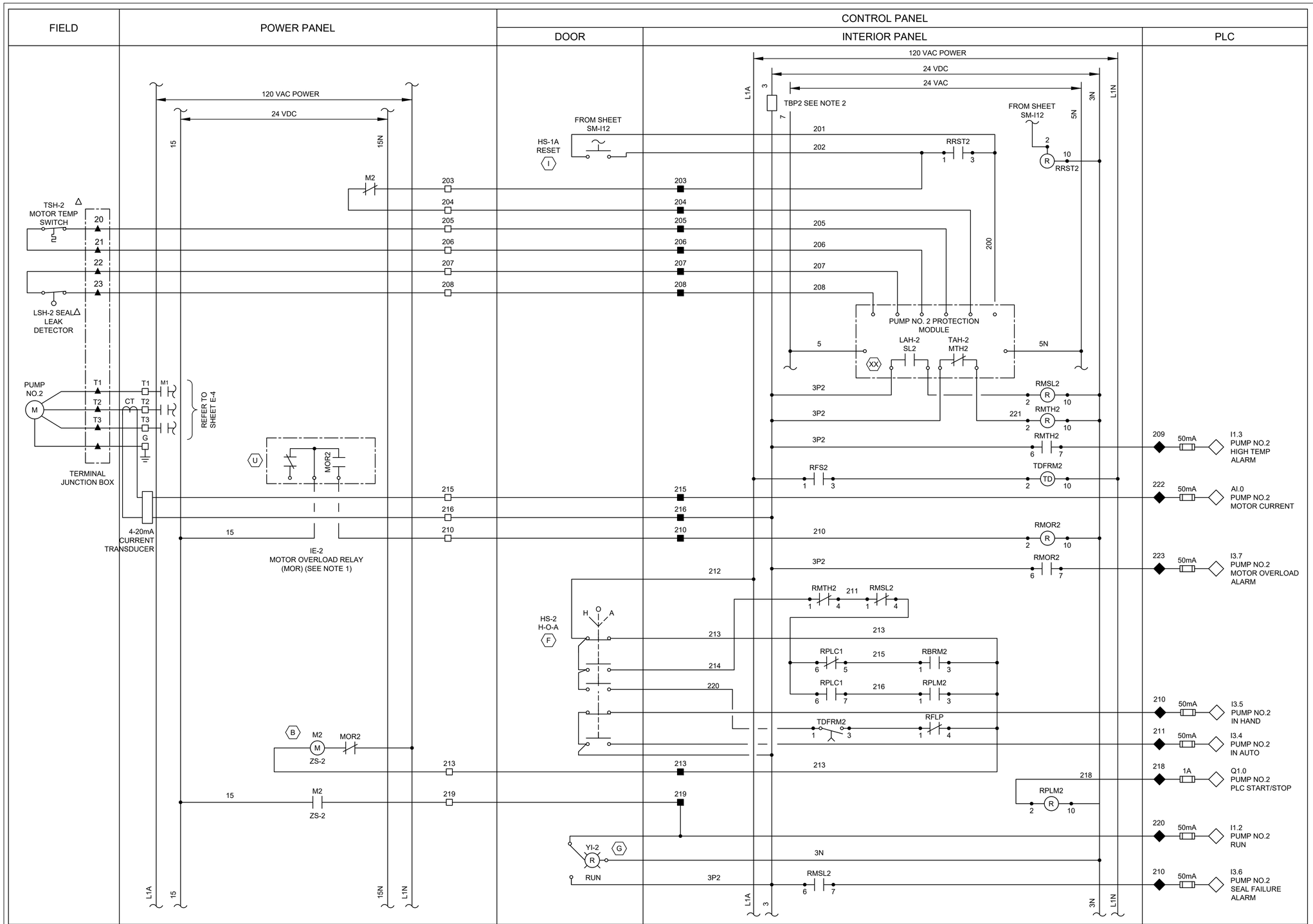

NOTES:

1. MOTOR OVERLOAD RELAY OUTPUT CONTACT SHOWN IS NORMALLY CLOSED WHEN RELAY IS DE-ENERGIZED, OPEN WHEN ENERGIZED, AND CLOSED WHEN IN ALARM. VERIFY OPERATION OF RELAY PROVIDED AND ADJUST CONNECTION OF RMOR AUXILIARY RELAYS.
2. FUSED TERMINAL ON TERMINAL BLOCK TB4 SEE CONTROL POWER AND COMMUNICATION WIRING DIAGRAM DRAWING NO. SM-I3.
3. ALL FLOAT CONTROL CIRCUIT WIRES COLOR SHALL BE YELLOW.

GENERAL NOTES:

1. NO ELECTRICAL MATERIAL, APPARATUS, DEVICES, APPLIANCES, FIXTURES, OR EQUIPMENT SHALL BE SOLD OR INSTALLED IN THE CITY UNLESS THEY ARE IN CONFORMANCE WITH THE PROVISIONS OF SECTION 508 CITY OF HOUSTON ELECTRICAL CODE, THE LAWS OF THE STATE OF TEXAS AND ANY APPLICABLE RULES AND REGULATIONS ISSUED UNDER THE AUTHORITY OF THE STATE STATUES. THE MAKER'S NAME, TRADEMARK, OR OTHER IDENTIFICATION SYMBOL SHALL BE PLACED ON ALL ELECTRICAL MATERIALS, APPARATUS, DEVICES, APPLIANCES, FIXTURES, AND EQUIPMENT USED OR INSTALLED UNDER THE PROVISIONS OF THIS CODE. ALL ELECTRICAL MATERIALS AND EQUIPMENT SHALL BE LISTED AND LABELED FOR THE INTENDED USE AND SHALL BE INCLUDED IN A LIST PUBLISHED BY AN APPROVAL AGENCY.

LEGEND

- △ DEVICE OR FIELD TERMINAL LOCATED AT MOTOR
- ✳ DEVICE OR FIELD TERMINAL LOCATED REMOTE
- □ DEVICE OR FIELD TERMINAL LOCATED AT MCC/POWER PANEL
- ■ FIELD TERMINAL LOCATED AT CONTROL PANEL
- ▲ REMOTE TERMINAL
- ● DEVICE TERMINAL NO.
- ◆ PLC INTERFACE TERMINAL

SM-I-13

NO.	DATE	REVISION	APP.
	MM/DD/YY	BRIEF DESCRIPTION	XXX
	MM/DD/YY	BRIEF DESCRIPTION	XXX
	MM/DD/YY	BRIEF DESCRIPTION	XXX

RPS
A TETRA TECH COMPANY
Texas PE Firm Reg. #F-929
575 N. Dairy Ashford, Suite 700,
Houston, Texas 77079
T +1 281 589 7257
E usinfrastructure@rpsgroup.com

SURVEYED BY:
FB NO. F-4578

FOR INTERIM REVIEW ONLY NOT INTENDED FOR PERMIT, BIDDING OR CONSTRUCTION PURPOSES.
ENGINEER:
HOSS FOROUZAN
P.E. SERIAL NO.77748
03/30/2026

CITY OF HOUSTON
HOUSTON PUBLIC WORKS

RECONSTRUCTION & REHABILITATION
COH LIFT STATIONS

SHADY MAPLES LIFT STATION PUMP NO.2 CONTROL WIRING DIAGRAM

WBS NUMBER	FOR CITY OF HOUSTON USE ONLY
R-000267-00178-3	
DRAWING SCALE	
AS NOTED	
CITY OF HOUSTON PM	
TAHA LOTIA	
SHEET NO. 106 OF 268	

PLOTTED: 3/26/2026 6:07 PM
FILE PATH: O:\H8109_Lift Station Rehabilitation And Reconstruction (Tetratech)\6 Drawings\Instrumentation And Control\1Working\Shady Maples\H8109_SM-I-13.dwg

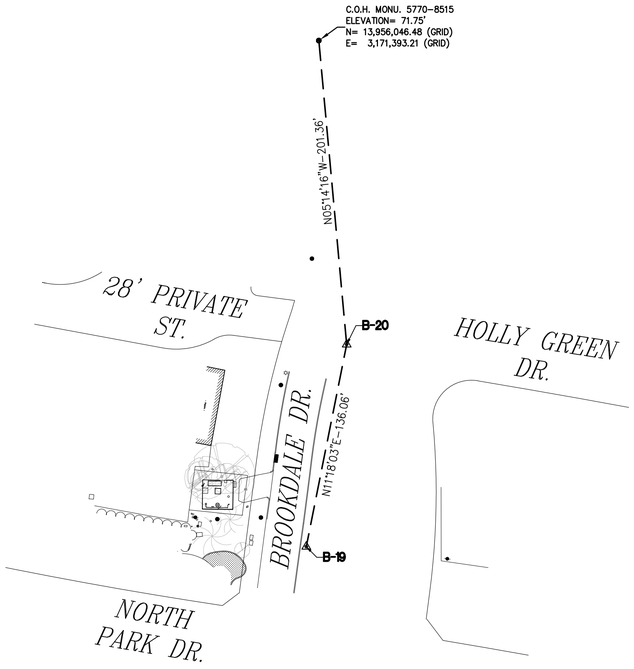

SURVEY BASELINE POINTS DATA (TEMPORARY BENCHMARK)						
POINT No.	NORTHING (SURFACE)	EASTING (SURFACE)	NORTHING (GRID)	EASTING (GRID)	ELEVATION	DESCRIPTION
B-19	13,957,526.83	3,171,797.21	13,955,712.59	3,171,384.93	72.37'	SET 5/8" I.R. W/CAP
B-20	13,957,660.25	3,171,823.88	13,955,845.99	3,171,411.59	71.92'	SET 'X' CUT ON CONC.

CITY OF HOUSTON

5770
CITY SURVEY
8515
SITE CONTROL MONUMENT

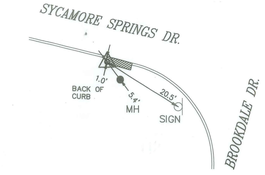

Project WBS# R-000267-0178-3
Texas Coordinate System of 1983, South Central Zone, U. S. Survey Feet
X= 3,171,393.21'
Y= 13,956,046.48'
Lat.= 30° 04' 10.72427" (N)
Lon.= 95° 11' 47.46507" (W)
Reference Frame Used: NAD '83 (2011) (EPOCH: 2010)
Vertical Adjustment used: NAVD '88
General Location: ON THE WEST CORNER OF AN INLET ALONG THE INTERSECTION OF BROOKDALE DRIVE AND SYCAMORE SPRINGS DRIVE
Date Set: 10-17-2025 Type of Mark: 4A ON INLET

Keymap Page: 297S
Orthometric Elevation =71.75 FEET
Ellipsoid Height= -18.1742 FEET
Geoid: GEOID '18
Datum Source & Adjustment: GPS-STATIC (OBSERVED ON 10-17-2025)

3 Nearest project control points (bearings and distances stated below):
1 S 05° 15' 21" E 201.36'
2 S 01° 24' 34" W 334.04'

NOTE:
1. Bearings are grid bearings.
2. Scale Factor = (S.F. 0.999870017).
3. Surface= Grid / S.F.

Surveyed By: Kuo & Associates, LLC
10300 Westoffice Dr., Suite 800
Houston, TX 77042

STATE OF TEXAS
REGISTERED
RICARDO A. VAZQUEZ
4902
PROFESSIONAL
SURVEYOR

City of Houston, Harris County, Texas



EXIST. TOPOGRAPHIC LEGEND

- ASPHALT SYMBOL
- B OR BB INLET
- BUSH
- C INLET
- CLEANOUT
- brick column
- DOWN GUY
- E INLET
- ELEC MANHOLE
- FIRE HYDRANT
- GAS METER
- GAS VALVE
- GATE
- GRATE INLET
- GRATE INLET
- MAIL BOX
- STORM MANHOLE
- SANITARY MANHOLE
- PLANTER
- POWER POLE
- POWER POLE W/LT.
- SIGN
- SIGNAL POLE
- SPRINKER VALVE
- SPRINKLER HEAD
- STREET LIGHT/FLOOD LIGHT
- TREE
- TREE STUMP
- TREE-CREPE MYRTLE
- TREE-PINE
- WATER METER
- WATER VALVE
- IRRIGATION CONTROL VALVE

ABBREVIATIONS

BC - BACK OF CURB
EA - EDGE OF ASPHALT
EC - EDGE OF CONCRETE
EG - EDGE OF GRAVEL
FH - FIRE HYDRANT
FC - FENCE CORNER
LT - LIGHT POLE
MB - MAIL BOX
MH - MANHOLE
PP - POWER POLE
PP/LIGHT - POWER POLE W/LIGHT
STLT - STREET LIGHT
TRLT - TRAFFIC LIGHT
WM - WATER METER

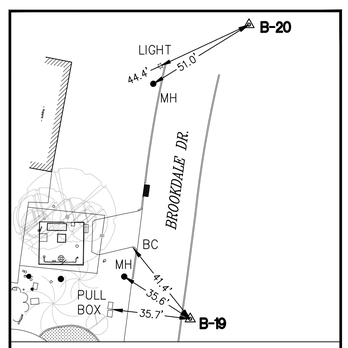

T.B.M. B-19, B-20

N.T.S.

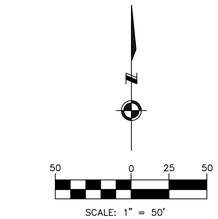

SCALE: 1" = 50'

NO.	DATE	REVISION	APP.

BENCHMARK:

CITY OF HOUSTON MONUMENT 5770-8515 IS AN ALUMINUM DISK ON TOP OF INLET LOCATED ON SYCAMORE SPRINGS DR APPROXIMATELY 50 FEET EAST FROM THE INTERSECTION OF BROOKDALE DR

ELEV. 72.23 FEET NAVD 1988, 2001 AJUSTMENT(PROJECT DATUM)
ELEV. 71.75 FEET NAVD 1988, (GEOID '18)*

* OBSERVED BY GPS SURVEYING AND PROCESSED IN REFERENCE TO THE CORS DATED OCTOBER 17, 2025.

VERTICAL DATUM ADJUSTMENT:

THE ELEVATION DIFFERENCE IN BETWEEN THE FLOODPLAIN REFERENCE MARK'S (RM 070375) PUBLISHED DATUM NAVD 1988, 2001 ADJUSTMENT AND DATUM NAVD 1988, (GEOID '18) IS 0.48'.

NAVD 1988, 2001 ADJ. ELEVATION
= NAVD 1988 (GEOID '18) ELEVATION + 0.48 FT

NOTE:

ALL BEARINGS AND DISTANCES ARE BASED ON TEXAS STATE PLANE COORDINATE SYSTEM, SOUTH CENTRAL ZONE NO. 4204, NAD83. ALL DISTANCES ARE IN SURFACE.

THE COORDINATES SHOWN HEREON ARE TEXAS SOUTH CENTRAL ZONE NO. 4204 STATE PLANE GRID COORDINATES (NAD83) AND MAY BE BROUGHT TO SURFACE BY DIVIDING BY THE COMBINED SCALE FACTOR 0.999870017.

LEGEND:

- **B-X** SURVEY CONTROL POINT NUMBER
- C-X DESIGN BASELINE POINT NUMBER
- SURVEY CONTROL POINT
- DESIGN BASELINE POINT
- CITY OF HOUSTON MONUMENT
- S. BL: SURVEY BASELINE

RPS
A TETRA TECH COMPANY
Texas PE Firm Reg. #F-929
575 N. Dairy Ashford, Suite 700,
Houston, Texas 77079
T +1 281 589 7257
E usinfrastructure@rpsgroup.com

KUO & ASSOCIATES
ENGINEERING + SURVEYING
10300 Westoffice Dr., Suite 800, Houston, Texas 77042
Tel: 713-975-8769, Fax: 713-975-0920, www.kuoassociates.com
TBPELS Firm Registration No. F-4578
TBPELS Firm Registration No. 1007560

THIS DOCUMENT IS RELEASED FOR THE PURPOSE OF INTERIM REVIEW UNDER THE AUTHORITY OF
RICARDO A. VAZQUEZ, R.P.L.S.
TEXAS REG. NO.: 4902
ON 02/26/2026
IT IS NOT TO BE USED FOR PERMIT, BIDDING OR CONSTRUCTION PURPOSES

CITY OF HOUSTON
HOUSTON PUBLIC WORKS

RECONSTRUCTION & REHABILITATION
COH LIFT STATIONS

BROOKDALE LS

SURVEY CONTROL MAP
BR-SC-1

WBS NUMBER	FOR CITY OF HOUSTON USE ONLY
R-000267-0178-3	
DRAWING SCALE	
AS SHOWN	
CITY OF HOUSTON PM	
TAHA LOTIA	
SHEET NO. 107 OF 268	

National Flood Hazard Layer FIRMette

FEMA

95°12'7"W 30°4'17"N

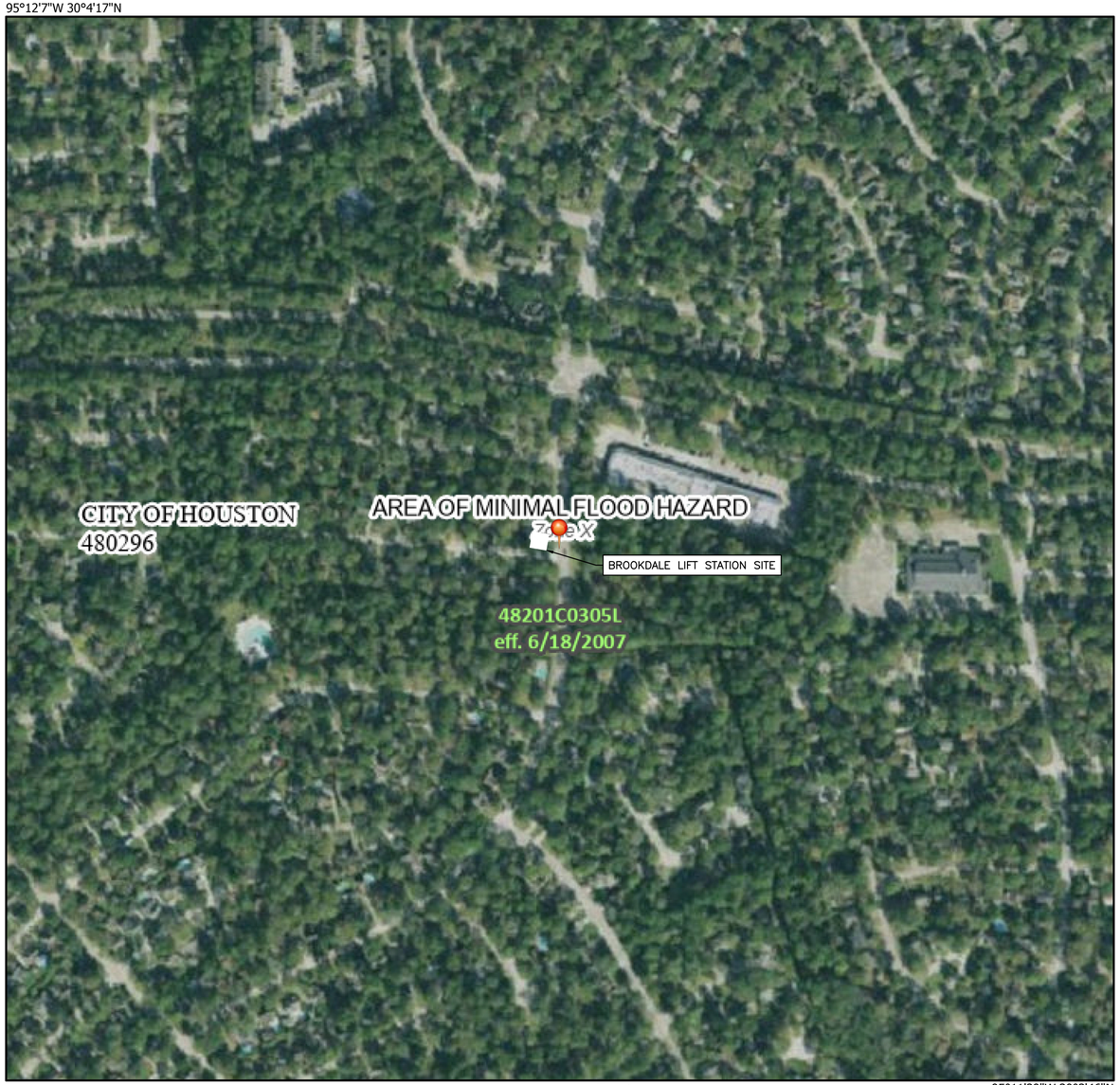

0 250 500 1,000 1,500 2,000 Feet

1:6,000

95°11'29"W 30°3'46"N

Basemap Imagery Source: USGS National Map 2023

Legend

SEE FIS REPORT FOR DETAILED LEGEND AND INDEX MAP FOR FIRM PANEL LAYOUT

SPECIAL FLOOD HAZARD AREAS
- Without Base Flood Elevation (BFE) *Zone A, V, A99*
- With BFE or Depth *Zone AE, AO, AH, VE, AR*
- Regulatory Floodway

OTHER AREAS OF FLOOD HAZARD
- 0.2% Annual Chance Flood Hazard, Areas of 1% annual chance flood with average depth less than one foot or with drainage areas of less than one square mile *Zone X*
- Future Conditions 1% Annual Chance Flood Hazard *Zone X*
- Area with Reduced Flood Risk due to Levee. See Notes. *Zone X*
- Area with Flood Risk due to Levee *Zone D*

OTHER AREAS
- NO SCREEN Area of Minimal Flood Hazard *Zone X*
- Effective LOMRs
- Area of Undetermined Flood Hazard *Zone D*

GENERAL STRUCTURES
- Channel, Culvert, or Storm Sewer
- Levee, Dike, or Floodwall

OTHER FEATURES
- 20.2 / 17.5 Cross Sections with 1% Annual Chance Water Surface Elevation
- Coastal Transect
- 513 Base Flood Elevation Line (BFE)
- Limit of Study
- Jurisdiction Boundary
- Coastal Transect Baseline
- Profile Baseline
- Hydrographic Feature

MAP PANELS
- Digital Data Available
- No Digital Data Available
- Unmapped

N

The pin displayed on the map is an approximate point selected by the user and does not represent an authoritative property location.

This map complies with FEMA's standards for the use of digital flood maps if it is not void as described below. The basemap shown complies with FEMA's basemap accuracy standards

The flood hazard information is derived directly from the authoritative NFHL web services provided by FEMA. This map was exported on 7/31/2024 at 1:43 PM and does not reflect changes or amendments subsequent to this date and time. The NFHL and effective information may change or become superseded by new data over time.

This map image is void if the one or more of the following map elements do not appear: basemap imagery, flood zone labels, legend, scale bar, map creation date, community identifiers, FIRM panel number, and FIRM effective date. Map images for unmapped and unmodernized areas cannot be used for regulatory purposes.

RPS A TETRA TECH COMPANY
Texas PE Firm Reg. #F-929
575 N. Dairy Ashford, Suite 700,
Houston, Texas 77079
T +1 281 589 7257
E usinfrastructure@rpsgroup.com

SURVEYED BY: KUO Inc.
FB NO. F-4578

This document is released for the purposes of interim review only under the authority of:

Neha Raval, P.E.
Texas P.E. No. 141506
03/30/2026

It is not to be used for bidding, construction, or permitting purposes.

CITY OF HOUSTON
HOUSTON PUBLIC WORKS

RECONSTRUCTION & REHABILITATION
COH LIFT STATIONS

FIRMETTE –BROOKDALE LS
BR–FC–1

WBS NUMBER	FOR CITY OF HOUSTON USE ONLY
R–000267–0178–3	
DRAWING SCALE	
AS NOTED	
CITY OF HOUSTON PM	
TAHA LOTIA	
SHEET NO. 108 OF 268	

PLOTTED: 3/30/2026 4:54 PM
PLOT STYLE: Coh_ctb_230809.ctb
FILE NAME: FIRMETTE –BROOKDALE LS.dwg

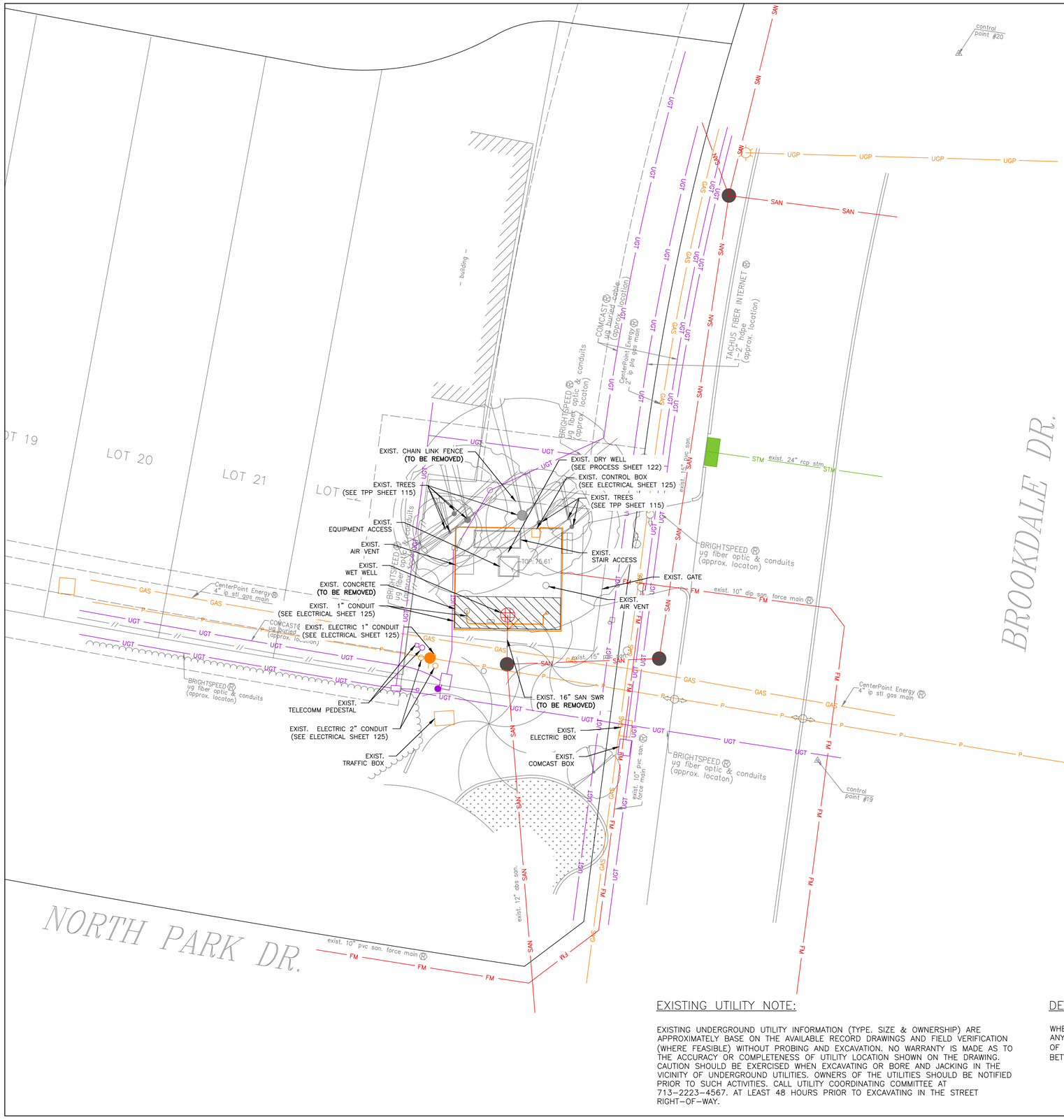
control point #20
SAN
UGP
UGP
UGP
UGP
SAN
SAN
UGT
GAS
UGT
UGT
UGT

PLOTTED: 3/30/2026 4:54 PM

PLOT STYLE: Coh_ctb_230809.ctb

FILE NAME: PROPOSED SITE PLAN – BROOKDALE LS.dwg

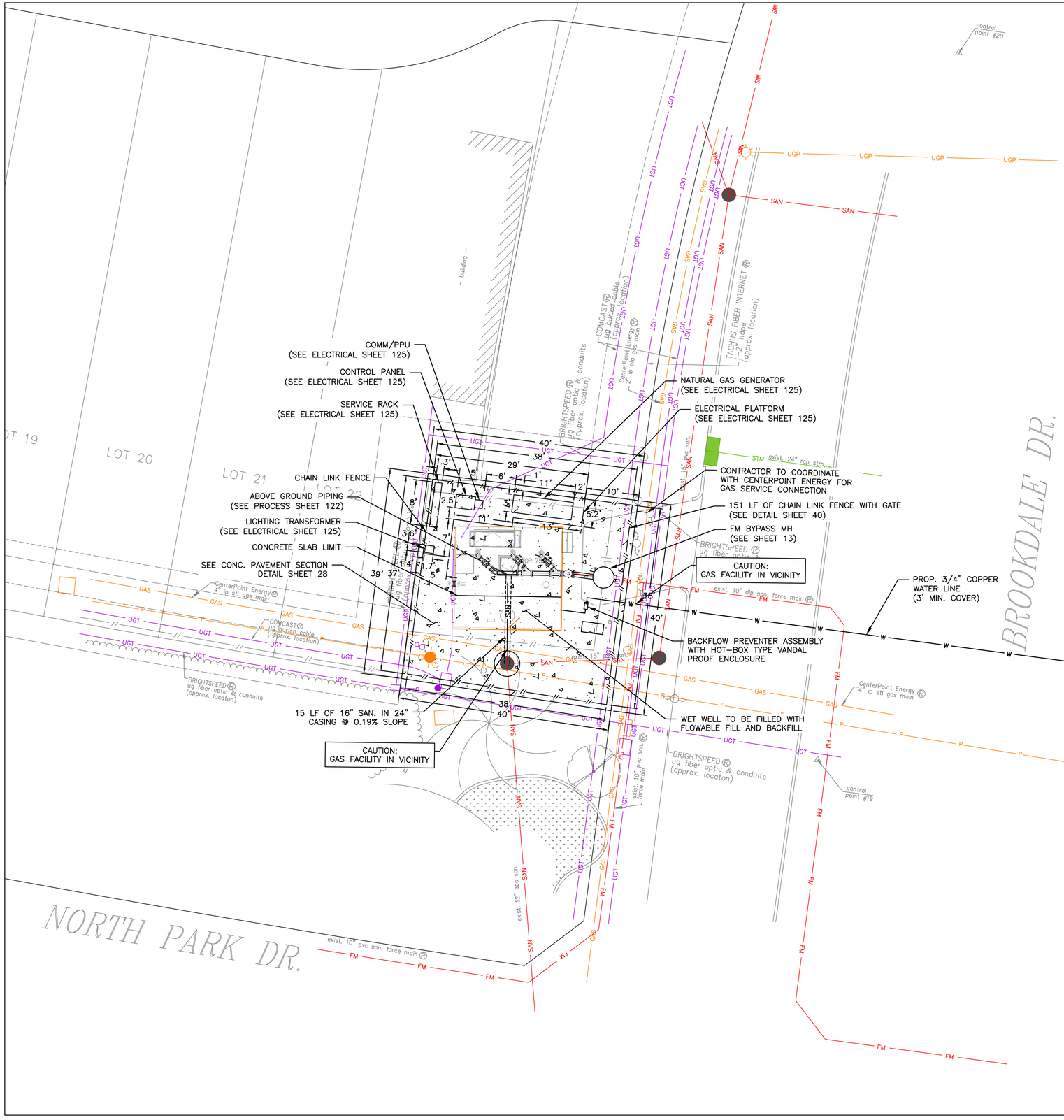

N

0' 5' 10' 20'

SCALE: 1"=10'

CONSTRUCTION NOTES

1. VERIFY ALL EXISTING DIMENSIONS, ELEVATIONS, INVERTS, AND UTILITIES IN THE FIELD BEFORE CONSTRUCTION.
2. UTILITY LOCATIONS SHOWN ARE APPROXIMATE AND BASED ON AVAILABLE RECORDS AND SURVEY INFORMATION.
3. MAINTAIN CONTINUOUS SANITARY SEWER SERVICE DURING CONSTRUCTION; PROVIDE BYPASS PUMPING AS REQUIRED.
4. ABANDON EXISTING SEWERS AND APPURTENANCES AS INDICATED AND IN ACCORDANCE WITH CITY OF HOUSTON REQUIREMENTS.
5. PROTECT EXISTING FACILITIES DESIGNATED TO REMAIN.
6. PROVIDE POSITIVE DRAINAGE AWAY FROM ALL LIFT STATION STRUCTURES AND EQUIPMENT PADS.
7. RESTORE DISTURBED AREAS TO EQUAL OR BETTER CONDITION.

TSARP CONVERSION REFERENCE MONUMENT

CITY OF HOUSTON 5770-8515 IS AN ALUMINUM DISK ON TOP OF INLET LOCATED ON SYCAMORE SPRINGS DR APPROXIMATELY 50 FEET EAST FROM THE INTERSECTION BROOKDALE DR

PROJECT SITE MONUMENT

ELEV. 72.23 FEET NAVD 1988, 2001 ADJUSTMENT (PROJECT DATUM)
ELEV. 71.75 FEET NAVD 1988, (GEOID '18)*

*OBSERVED BY GPS SURVEYING AND PROCESSED IN REFERENCE TO THE CORS DATED OCTOBER 17, 2025

TBM
B-19: SET 5/8" I.R. W/CAP,
ELEV:72.37'
B-20: SET "X" CUT ON CONC,
ELEV:71.92'

RPS A TETRA TECH COMPANY
Texas PE Firm Reg. #F-929
575 N. Dairy Ashford, Suite 700,
Houston, Texas 77079
T +1 281 589 7257
E usinfrastructure@rpsgroup.com

SURVEYED BY: KUO Inc.
FB NO. F-4578

This document is released for the purposes of interim review only under the authority of:

Neha Raval, P.E.
Texas P.E. No. 141506
03/30/2026

It is not to be used for bidding, construction, or permitting purposes.

CITY OF HOUSTON
HOUSTON PUBLIC WORKS

RECONSTRUCTION & REHABILITATION
COH LIFT STATIONS

PROPOSED SITE PLAN
– BROOKDALE LS
BR-C-2

WBS NUMBER	FOR CITY OF HOUSTON USE ONLY
R-000267-0178-3	
DRAWING SCALE	
AS NOTED	
CITY OF HOUSTON PM	
TAHA LOTIA	
SHEET NO. 110 OF 268	

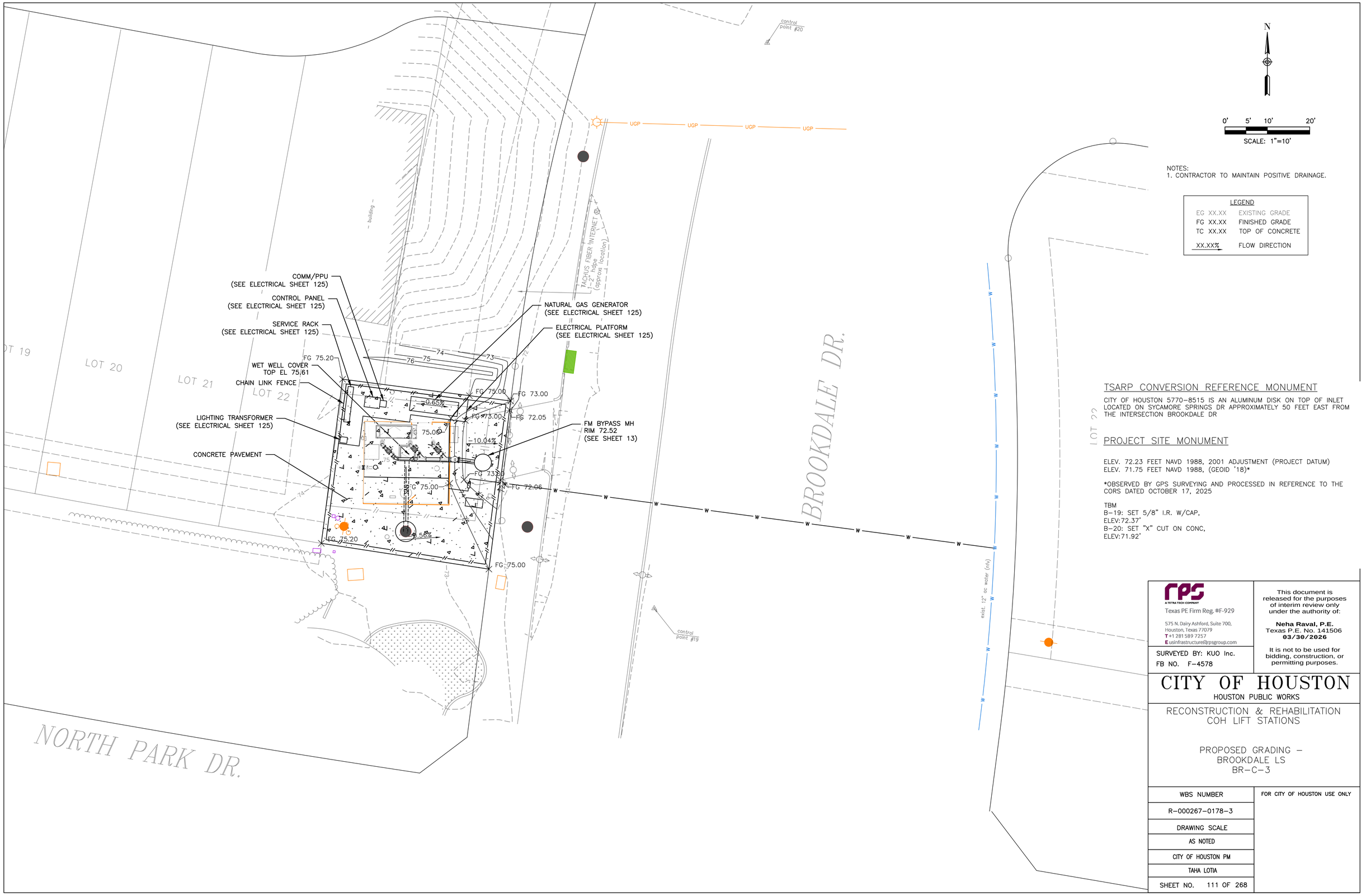

NOTES:
1. CONTRACTOR TO MAINTAIN POSITIVE DRAINAGE.

LEGEND	
EG XX.XX	EXISTING GRADE
FG XX.XX	FINISHED GRADE
TC XX.XX	TOP OF CONCRETE
XX.XX%	FLOW DIRECTION

TSARP CONVERSION REFERENCE MONUMENT

CITY OF HOUSTON 5770-8515 IS AN ALUMINUM DISK ON TOP OF INLET LOCATED ON SYCAMORE SPRINGS DR APPROXIMATELY 50 FEET EAST FROM THE INTERSECTION BROOKDALE DR

PROJECT SITE MONUMENT

ELEV. 72.23 FEET NAVD 1988, 2001 ADJUSTMENT (PROJECT DATUM)
ELEV. 71.75 FEET NAVD 1988, (GEOID '18)*

*OBSERVED BY GPS SURVEYING AND PROCESSED IN REFERENCE TO THE CORS DATED OCTOBER 17, 2025

TBM
B-19: SET 5/8" I.R. W/CAP,
ELEV:72.37'
B-20: SET "X" CUT ON CONC,
ELEV:71.92'

RPS
A TETRA TECH COMPANY
Texas PE Firm Reg. #F-929
575 N. Dairy Ashford, Suite 700,
Houston, Texas 77079
T +1 281 589 7257
E usinfrastructure@rpsgroup.com

SURVEYED BY: KUO Inc.
FB NO. F-4578

This document is released for the purposes of interim review only under the authority of:

Neha Raval, P.E.
Texas P.E. No. 141506
03/30/2026

It is not to be used for bidding, construction, or permitting purposes.

CITY OF HOUSTON
HOUSTON PUBLIC WORKS

RECONSTRUCTION & REHABILITATION
COH LIFT STATIONS

PROPOSED GRADING -
BROOKDALE LS
BR-C-3

WBS NUMBER	FOR CITY OF HOUSTON USE ONLY
R-000267-0178-3	
DRAWING SCALE	
AS NOTED	
CITY OF HOUSTON PM	
TAHA LOTIA	
SHEET NO. 111 OF 268	

PLOTTED: 3/30/2026 4:54 PM
PLOT STYLE: Coh_ctb_230809.ctb
FILE NAME: PROPOSED GRADING - STORM SEWER AND UTILITY PLAN - BROOKDALE LS.dwg

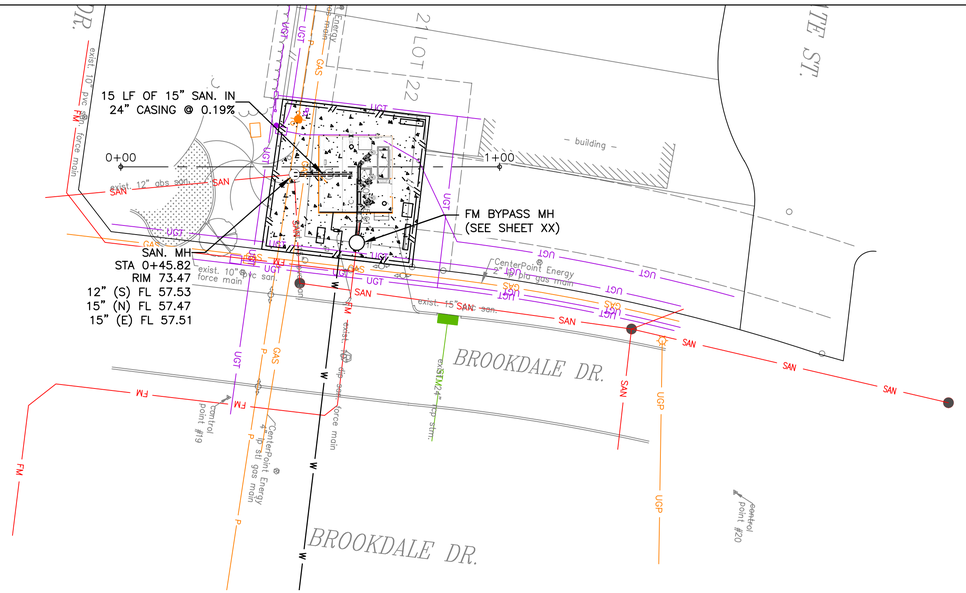

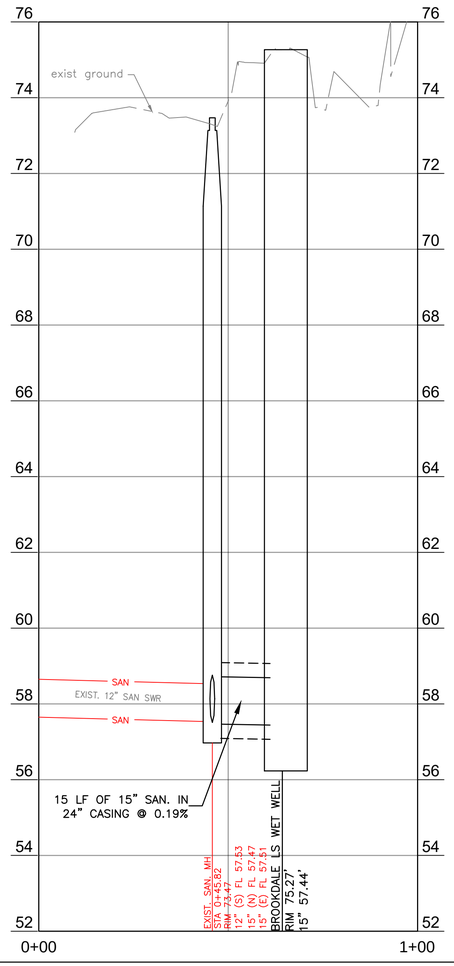

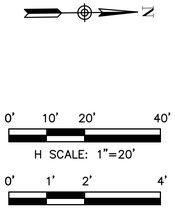

RPS
A TETRA TECH COMPANY
Texas PE Firm Reg. #F-929
575 N. Dairy Ashford, Suite 700,
Houston, Texas 77079
T +1 281 589 7257
E usinfrastructure@rpsgroup.com

SURVEYED BY: KUO Inc.
FB NO. F-4578

This document is released for the purposes of interim review only under the authority of:

Neha Raval, P.E.
Texas P.E. No. 141506
03/30/2026

It is not to be used for bidding, construction, or permitting purposes.

CITY OF HOUSTON
HOUSTON PUBLIC WORKS

RECONSTRUCTION & REHABILITATION
COH LIFT STATIONS

PLAN & PROFILE –
BROOKDALE LS
BR–C–4

WBS NUMBER	FOR CITY OF HOUSTON USE ONLY
R–000267–0178–3	
DRAWING SCALE	
AS NOTED	
CITY OF HOUSTON PM	
TAHA LOTIA	
SHEET NO. 112 OF 268	

PLOTTED: 3/30/2026 4:55 PM
PLOT STYLE: Coh_ctb_230809.ctb
FILE NAME: PLAN & PROFILE – BROOKDALE LS.dwg



LEGEND

- REINFORCED FILTER FABRIC BARRIER
- INLET PROTECTION BARRIER
- STABILIZED CONSTRUCTION ACCESS
- CONCRETE TRUCK WASHOUT AREA

RPS A TETRA TECH COMPANY
Texas PE Firm Reg. #F-929
575 N. Dairy Ashford, Suite 700, Houston, Texas 77079
T +1 281 589 7257
E usinfrastructure@rpsgroup.com

SURVEYED BY: KUO Inc.
FB NO. F-4578

This document is released for the purposes of interim review only under the authority of:

Neha Raval, P.E.
Texas P.E. No. 141506
03/30/2026

It is not to be used for bidding, construction, or permitting purposes.

CITY OF HOUSTON

HOUSTON PUBLIC WORKS

RECONSTRUCTION & REHABILITATION
COH LIFT STATIONS

SWPPP – BROOKDALE LS
BR-C-5

WBS NUMBER	FOR CITY OF HOUSTON USE ONLY
R-000267-0178-3	
DRAWING SCALE	
AS NOTED	
CITY OF HOUSTON PM	
TAHA LOTIA	
SHEET NO. 113 OF 268	

PLOTTED: 3/30/2026 4:55 PM
PLOT STYLE: Coh_ctb_230809.ctb
FILE NAME: SWPPP – BROOKDALE LS.dwg



rps
A TETRA TECH COMPANY
Texas PE Firm Reg. #F-929
575 N. Dairy Ashford, Suite 700,
Houston, Texas 77079
T +1 281 589 7257
E usinfrastructure@rpsgroup.com

This document is released for the purposes of interim review only under the authority of:

Neha Raval, P.E.
Texas P.E. No. 141506
03/30/2026

It is not to be used for bidding, construction, or permitting purposes.

SURVEYED BY: KUO Inc.
FB NO. F-4578

CITY OF HOUSTON
HOUSTON PUBLIC WORKS

RECONSTRUCTION & REHABILITATION
COH LIFT STATIONS

TRAFFIC CONTROL PLAN –
BROOKDALE LS
BR-C-6

WBS NUMBER	FOR CITY OF HOUSTON USE ONLY
R-000267-0178-3	
DRAWING SCALE	
AS NOTED	
CITY OF HOUSTON PM	
TAHA LOTIA	
SHEET NO. 114 OF 268	

PLOTTED: 3/30/2026 4:55 PM
PLOT STYLE: Coh_ctb_230809.ctb
FILE NAME: TCP_BROOKDALE.dwg

Trees at Brookdale Lift Station					
190	2807 Brookdale	4" Crepe Myrtle	Not protected	Remove for LS expansion	Remove tree, No replacement required
191	2807 Brookdale	4" Crepe Myrtle	Not protected	Remove for LS expansion	Remove tree, No replacement required
192	2807 Brookdale	12" Water Oak	Protected	Remove for LS expansion	Remove tree, Provide 12" in mitigation/replacement
193	2807 Brookdale	14" Water Oak	Protected	Remove for LS expansion	Remove tree, Provide 14" in mitigation/replacement
194	2807 Brookdale	16" Water Oak	Protected	Remove for LS expansion	Remove tree, Provide 16" in mitigation/replacement
195	2807 Brookdale	13" Water Oak	Protected	Remove for LS expansion	Remove tree, Provide 13" in mitigation/replacement
196	2807 Brookdale	5" Water Oak	Protected	Remove for LS expansion	Remove tree, Provide 5" in mitigation/replacement
197	2807 Brookdale	9" Water Oak	Protected	Remove for LS expansion	Remove tree, Provide 9" in mitigation/replacement
198	2807 Brookdale	23" Pine	Protected	Pruned by CPE	Fence
199	2807 Brookdale	6" Red Maple	Protected		Fence

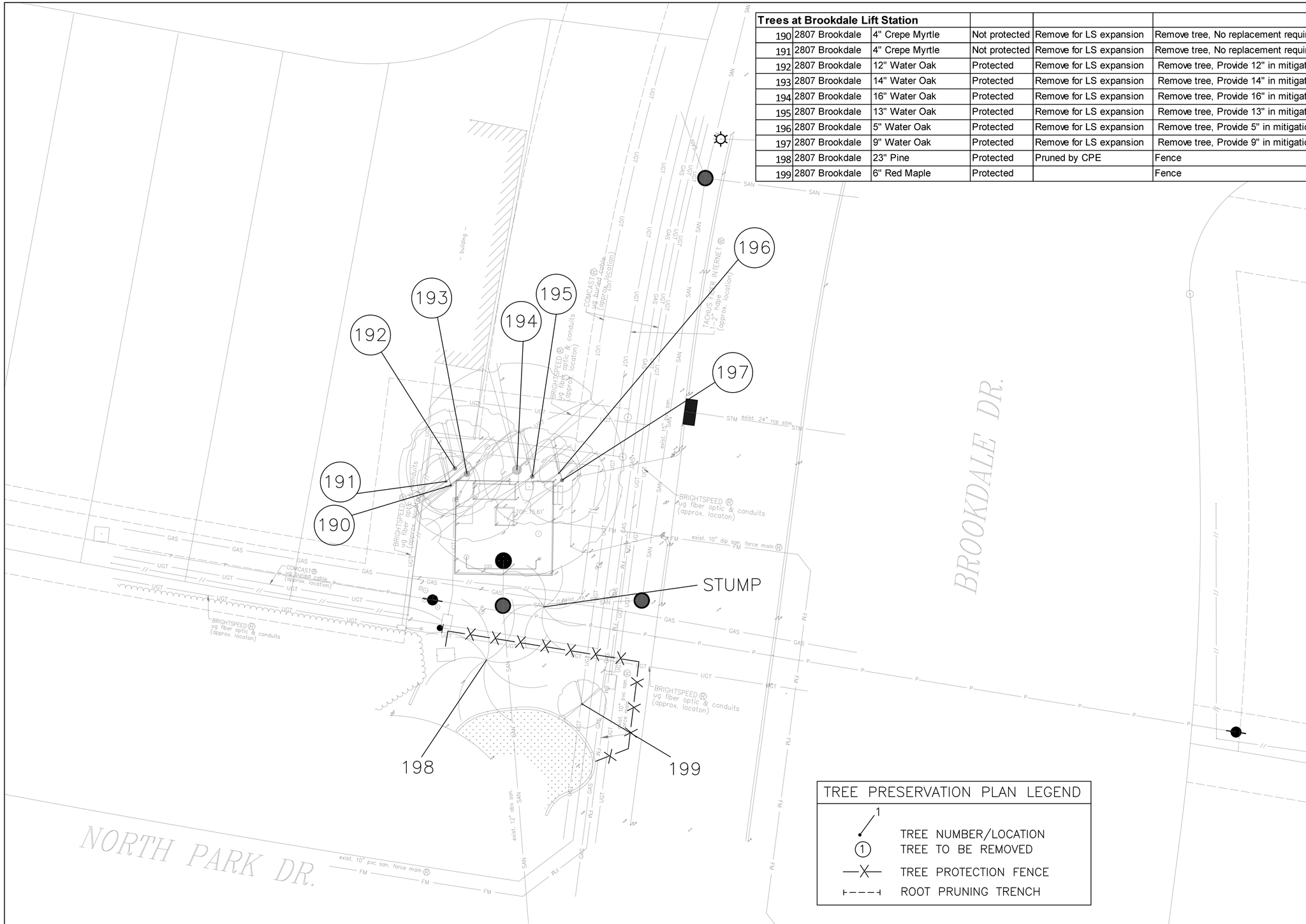

TREE PRESERVATION PLAN LEGEND	
1	TREE NUMBER/LOCATION
(1)	TREE TO BE REMOVED
—X—	TREE PROTECTION FENCE
⊢----⊣	ROOT PRUNING TRENCH

N

0' 5' 10' 20'

SCALE: 1"=10'

NOTE:

1. THIS TREE PROTECTION PLAN WAS DEVELOPED WITH INFORMATION PROVIDED BY DESIGN ENGINEER IN DRAWINGS DATED MARCH 2026. THE PLAN CONSIDERS ALL FITTINGS, VERTICAL OFFSETS AND AREAS OF NECESSARY EXCAVATION. CHANGES MADE TO DESIGN MAY COMPROMISE THE TREE PROTECTION PLAN. REFER SPECIFICATIONS 01562 AND 02915.
2. CN KOEHL URBAN FORESTRY, INC. HAS NOT BEEN CONTRACTED TO COMPLETE ANY TREE RISK ASSESSMENTS ON THIS PROJECT–THIS TPP INCLUDES PROTECTION MEASURES FOR SPECIES OF TREES PROTECTED BY APPLICABLE ORDINANCE ONLY. CN KOEHL URBAN FORESTRY, INC. DOES NOT GUARANTEE CONDITION OR STRUCTURAL INTEGRITY OF ANY TREE LOCATED ON OR ADJACENT TO THIS PROJECT.
3. IN AREAS WHERE INDIVIDUAL TREES HAVE NOT BEEN TIED IN BY SURVEY, APPROXIMATE LOCATION IS INDICATED ON TPP WITH A DOT AND TREE NUMBER. ACCURACY OF REPRESENTED LOCATION IS NOT GUARANTEED BY CN KOEHL URBAN FORESTRY, INC.

C.N. Koehl
Urban Forestry, Inc.
210 Stone Bush Ct. ◦ Katy, Texas 77493
281–391–0022 ckoehl@koehlurbanforestry.com

APPROVED:

RPS A TETRA TECH COMPANY
Texas PE Firm Reg. #F-929
575 N. Dairy Ashford, Suite 700, Houston, Texas 77079
T +1 281 589 7257
E usinfrastructure@rpsgroup.com

SURVEYED BY: KUO Inc.
FB NO. F–4578

CITY OF HOUSTON

HOUSTON PUBLIC WORKS

RECONSTRUCTION & REHABILITATION
COH LIFT STATIONS

TREE PROTECTION PLAN
– BROOKDALE LS
BR–C–7

SHEET 1 OF 6

WBS NUMBER	FOR CITY OF HOUSTON USE ONLY
R–000267–0178–3	
DRAWING SCALE	
AS NOTED	
CITY OF HOUSTON PM	
TAHA LOTIA	
SHEET NO. 115 OF 268	

PLOT STYLE: 007_oce_coh_0620_src14.ctb PLOTTED: 3/25/2026 11:29 AM
FILE PATH: C:\Users\Ned\Desktop\UPCOMING PROJECTS\TETRATECH COH LS REHAB\01 PROPOSED TPP – BROOKDALE LS.dwg

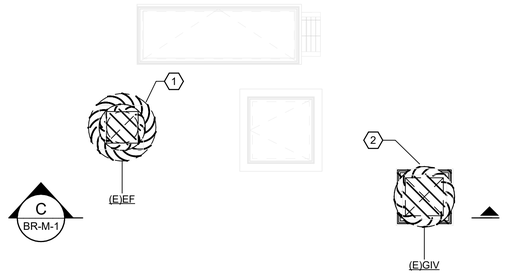

BROOKDALE LIFT STATION MECHANICAL DEMOLITION PLAN - TOP SLAB

SCALE: 1/4" = 1'-0"

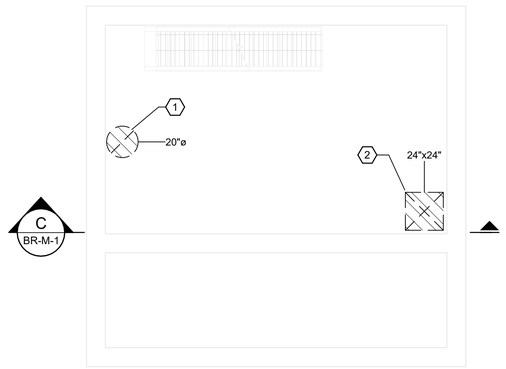

BROOKDALE LIFT STATION MECHANICAL DEMOLTION PLAN - INT. SLAB

SCALE: 1/4" = 1'-0"

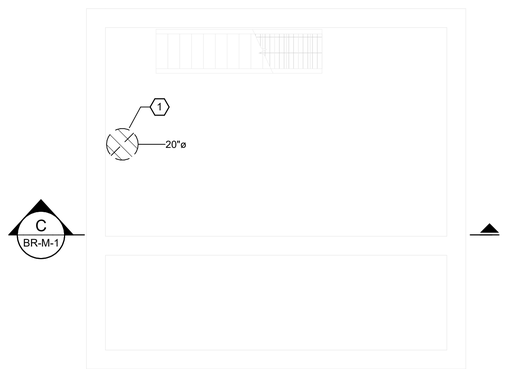

BROOKDALE LIFT STATION MECHANICAL DEMOLITION PLAN - LOWER LEVEL

SCALE: 1/4" = 1'-0"



A BR-M-1 BROOKDALE LIFT STATION EXHAUST FAN DEMOLITION PHOTO

SCALE: N.T.S.



B BR-M-1 BROOKDALE LIFT STATION INTAKE HOOD DEMOLITION PHOTO

SCALE: N.T.S.

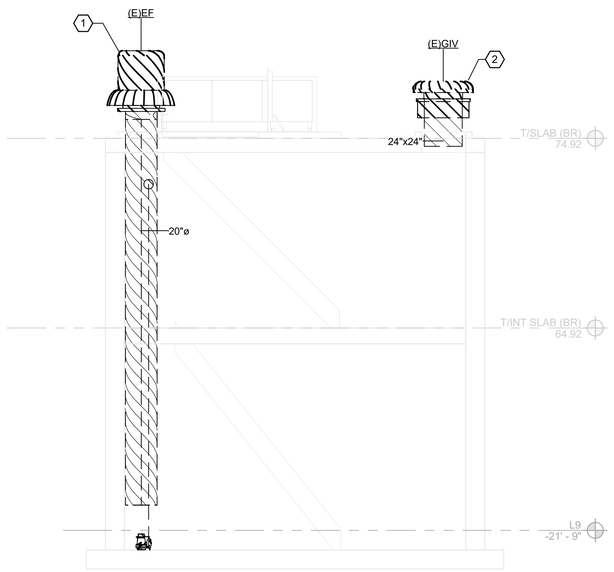

C BR-M-1 BROOKDALE LIFT STATION MECHANICAL DEMOLITION SECTION

SCALE: 1/4" = 1'-0"

KEYNOTE

#	
1	DEMOLISH AND REMOVE SLAB MOUNTED EXHAUST FAN AND ASSOCIATED DUCTWORK, ACCESSORIES, SUPPORTS, CONTROLS, AND WIRING. COORDINATE WITH STRUCTURAL TO PATCH AND INFILL OPENING.
2	DEMOLISH AND REMOVE SLAB MOUNTED INTAKE GRAVITY VENTILATOR AND ALL ASSOCIATED ACCESSORIES, SUPPORTS, CONTROLS, AND WIRING. COORDINATE WITH STRUCTURAL TO PATCH AND INFILL OPENING.

NO	DATE	REVISION	APP.

N

4' 0' 4' 8'

SCALE: 1/4" = 1'-0"

rps A TETRA TECH COMPANY
Texas PE Firm Reg. #F-929
575 N. Dairy Ashford, Suite 700, Houston, Texas 77079
T +1 281 589 7257
E usinfrastructure@rpsgroup.com

SURVEYED BY: KUO INC.
FB NO. F-4578

This document is released for the purposes of interim review only under the authority of:

Luke Ramirez, P.E.
Texas P.E. No. 128371
2/16/26

It is not to be used for bidding, construction, or permitting purposes.

CITY OF HOUSTON

HOUSTON PUBLIC WORKS

RECONSTRUCTION & REHABILITATION
COH LIFT STATIONS

BROOKDALE LS MECHANICAL DEMOLITION
PLANS AND SECTION

BR-M-1

WBS NUMBER	FOR CITY OF HOUSTON USE ONLY
R-000267-0178-3	
DRAWING SCALE	
AS NOTED	
CITY OF HOUSTON PM	
TAHA LOTIA	
SHEET NO. 116 OF 268	

PLOTTED: 3/27/2026 9:39:23 AM
PLOT STYLE:
Autodesk Docs://200-317106-24001 COH LS Rehab Design/M-LIFT STATIONS-200-317106-24001_v25.rvt

PLOTTED: 3/27/2026 9:39:26 AM
PLOT STYLE:
Autodesk Docs://200-317106-24001 COH LS Rehab Design/M-LIFT STATIONS-200-317106-24001_v25.rvt

KEYNOTE

1 PROVIDE PASSIVE GOOSENECK VENT FOR LIFT STATION WET WELL. COORDINATE WITH STRUCTURAL FOR PIPE PENETRATION THROUGH SIDEWALL OF WET WELL PER MECHANICAL DETAILS. ENSURE VENT LOCATION DOES NOT CLASH WITH ACCESS HATCH OPENING. VENT PIPE IS TO BE OF CORROSIVE RESISTANT CONSTRUCTION. PROVIDE REPLACEABLE STAINLESS STEEL INSECT SCREEN OVER VENT INLET/OUTLET.

NO	DATE	REVISION	APP.

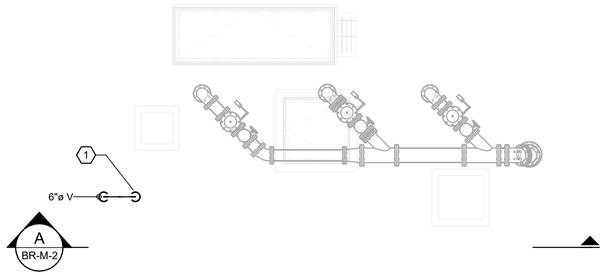

BROOKDALE LIFT STATION MECHANICAL NEW WORK PLAN - TOP SLAB

SCALE: 1/4" = 1'-0"

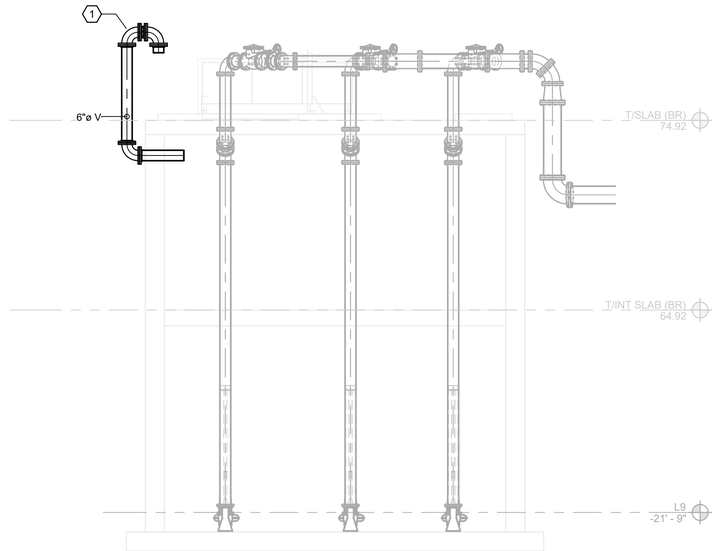

A BR-M-2 BROOKDALE LIFT STATION MECHANICAL NEW WORK SECTION

SCALE: 1/4" = 1'-0"

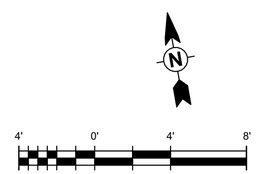

SCALE: 1/4" = 1'-0"

rps
A TETRA TECH COMPANY
Texas PE Firm Reg. #F-929
575 N. Dairy Ashford, Suite 700,
Houston, Texas 77079
T +1 281 589 7257
E usinfrastructure@rpsgroup.com

SURVEYED BY: KUO INC.
FB NO. F-4578

This document is released for the purposes of interim review only under the authority of:

Luke Ramirez, P.E.
Texas P.E. No. 128371
2/16/26

It is not to be used for bidding, construction, or permitting purposes.

CITY OF HOUSTON

HOUSTON PUBLIC WORKS

RECONSTRUCTION & REHABILITATION
COH LIFT STATIONS

BROOKDALE LS MECHANICAL PLANS AND SECTION

BR-M-2

WBS NUMBER
R-000267-0178-3
DRAWING SCALE
AS NOTED
CITY OF HOUSTON PM
TAHA LOTIA
SHEET NO. 117 OF 268

FOR CITY OF HOUSTON USE ONLY

PLOTTED: 3/27/2026 9:39:42 AM
PLOT STYLE:
Autodesk Docs://200-317106-24001 COH LS Rehab Design/M-LIFT STATIONS-200-317106-24001_v25.rvt

KEYNOTE

1 DEMOLISH AND REMOVE EXISTING DUPLEX SUMP PUMP SYSTEM AND ALL ASSOCIATED PIPING, ACCESSORIES, SUPPORTS, CONTROLS, AND WIRING.

NO	DATE	REVISION	APP.

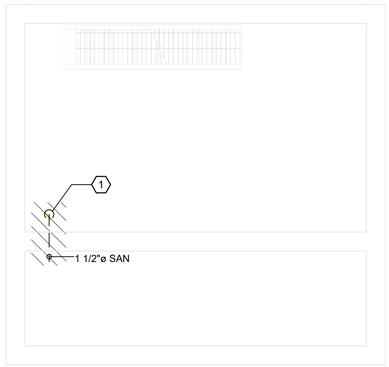

BROOKDALE LIFT STATION PLUMBING DEMOLTION PLAN - INT. SLAB

SCALE: 1/4" = 1'-0"

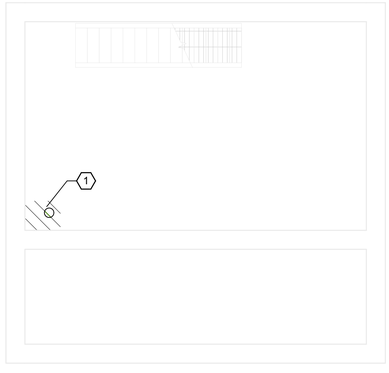

BROOKDALE LIFT STATION PLUMBING DEMOLITION PLAN - LOWER LEVEL

SCALE: 1/4" = 1'-0"

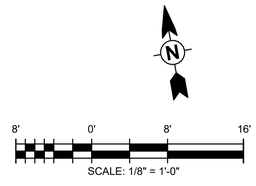

SCALE: 1/8" = 1'-0"

A TETRA TECH COMPANY
Texas PE Firm Reg. #F-929
575 N. Dairy Ashford, Suite 700,
Houston, Texas 77079
T +1 281 589 7257
E usinfrastructure@rpsgroup.com

SURVEYED BY: KUO INC.
FB NO. F-4578

This document is released for the purposes of interim review only under the authority of:

Luke Ramirez, P.E.
Texas P.E. No. 128371
2/16/26

It is not to be used for bidding, construction, or permitting purposes.

CITY OF HOUSTON

HOUSTON PUBLIC WORKS

RECONSTRUCTION & REHABILITATION
COH LIFT STATIONS

BROOKDALE LS DEMOLITION PLUMBING PLANS

BR-P-1

WBS NUMBER	FOR CITY OF HOUSTON USE ONLY
R-000267-0178-3	
DRAWING SCALE	
AS NOTED	
CITY OF HOUSTON PM	
TAHA LOTIA	
SHEET NO. 118 OF 268	

PLOTTED: 3/27/2026 9:39:43 AM
PLOT STYLE:
Autodesk Docs://200-317106-24001 COH LS Rehab Design/M-LIFT STATIONS-200-317106-24001_v25.rvt

KEYNOTE

#	
1	REFER TO CIVIL PLANS FOR YARD PIPING CONTINUATION.
2	PROVIDE NATURAL GAS SERVICE PIPING TO LIFT STATION SITE. COORDINATE WITH LOCAL UTILITY FOR NATURAL GAS SERVICE CONNECTION TO MAIN. CONTRACTOR TO COORDINATE WITH LOCAL UTILITY TO PROVIDE NEW NATURAL GAS METER AND PRESSURE REDUCING VALVE FOR SERVICE.
3	REFER TO ELECTRICAL DRAWINGS AND GENERATOR MANUFACTURER SPECIFICATIONS FOR FINAL NATURAL GAS PIPING CONNECTION LOCATION. PROVIDE SHUT OFF VALVE FOR ISOLATION AND FLEXIBLE CONNECTION AT GENERATOR.

NO	DATE	REVISION	APP.

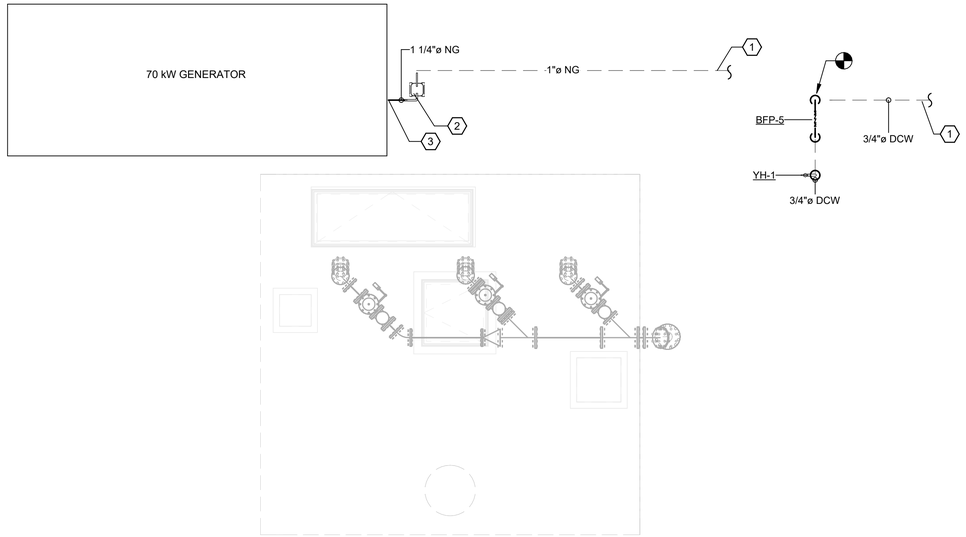

BROOKDALE LIFT STATION PLUMBING NEW WORK PLAN - TOP SLAB

SCALE: 1/4" = 1'-0"

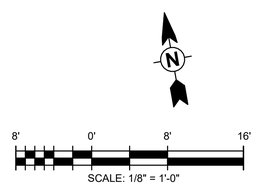

SCALE: 1/8" = 1'-0"

A TETRA TECH COMPANY
Texas PE Firm Reg. #F-929
575 N. Dairy Ashford, Suite 700,
Houston, Texas 77079
T +1 281 589 7257
E usinfrastructure@rpsgroup.com

SURVEYED BY: KUO INC.
FB NO. F-4578

This document is released for the purposes of interim review only under the authority of:

Luke Ramirez, P.E.
Texas P.E. No. 128371
2/16/26

It is not to be used for bidding, construction, or permitting purposes.

CITY OF HOUSTON

HOUSTON PUBLIC WORKS

RECONSTRUCTION & REHABILITATION
COH LIFT STATIONS

BROOKDALE LS PLUMBING PLANS

BR-P-2

WBS NUMBER	FOR CITY OF HOUSTON USE ONLY
R-000267-0178-3	
DRAWING SCALE	
AS NOTED	
CITY OF HOUSTON PM	
TAHA LOTIA	
SHEET NO. 119 OF 268	

PLOTTED 3/30/2026 10:01:21 AM
PLOT STYLE:
Autodesk Docs://200-317106-24001 COH LS Rehab Design/S-LIFT STATIONS-200-317106-24001_v25.rvt

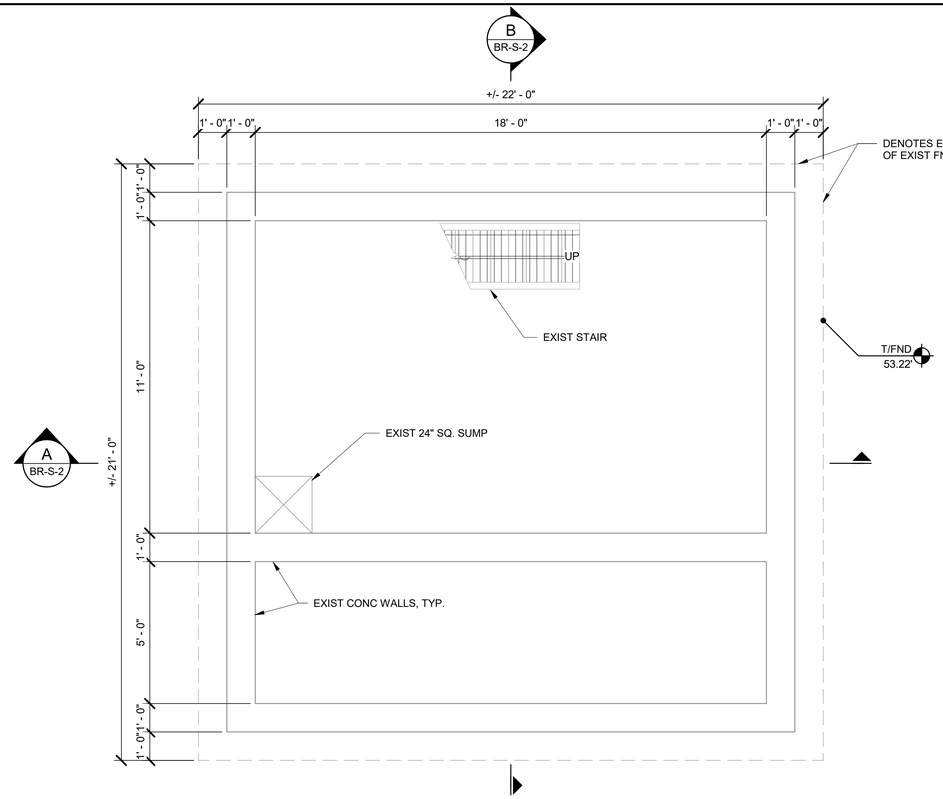

BROOKDALE FOUNDATION PLAN

SCALE: 3/8" = 1'-0"

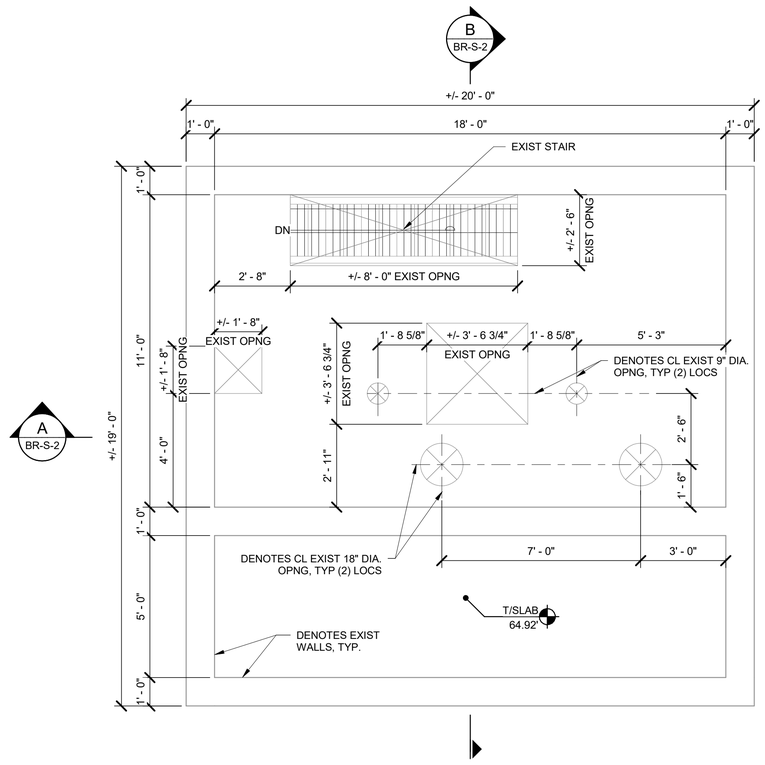

BROOKDALE INTERMEDIATE LEVEL PLAN

SCALE: 3/8" = 1'-0"

PLAN NOTES:

1. SEE SHEETS S-1 THROUGH S-2 FOR GENERAL NOTES AND DESIGN CRITERIA.
2. REFER TO CIVIL FOR STRUCTURE LOCATION, FINAL ELEVATIONS, AND ORIENTATION ON SITE.
3. COORDINATE ALL PIPE LOCATIONS, PENETRATIONS, AND ELEVATIONS WITH PROCESS AND CIVIL DRAWINGS.
4. PROVIDE ADDITIONAL REINFORCEMENT AROUND CONCRETE OPENINGS PER TYPICAL DETAIL 1 / STD-S-1
5. VERIFY ALL EXISTING DIMENSIONS AND ELEVATIONS IN THE FIELD PRIOR TO CONSTRUCTION.
6. WHERE SHOWN, EXISTING CENTERLINES ARE SHOWN FOR REFERENCE. CONTRACTOR IS RESPONSIBLE FOR COORDINATING LOCATION OF NEW PUMPS, FOUNDATIONS, AND PEDESTALS WITH OTHER DISCIPLINES.
7. ALUMINUM ACCESS HATCHES SHALL BE FLOODTIGHT, RATED FOR 625 PSF MINIMUM UNIFORM LIVE LOAD (10 FT HEAD OF WATER), AND INCLUDE SAFETY GRATING. CONTRACTOR SHALL CONFIRM SIZE AND LOCATION OF ACCESS HATCH OPENINGS ACCORDING TO THE SELECTED HATCH AND PUMP MANUFACTURERS' REQUIREMENTS. REFER TO SPEC "08310 - ACCESS HATCHES" FOR ADDITIONAL REQUIREMENTS.

NO	DATE	REVISION	APP.

****BROOKDALE LIFT STATION NEW STRUCTURAL MODIFICATIONS PENDING GEOTECH REPORT****

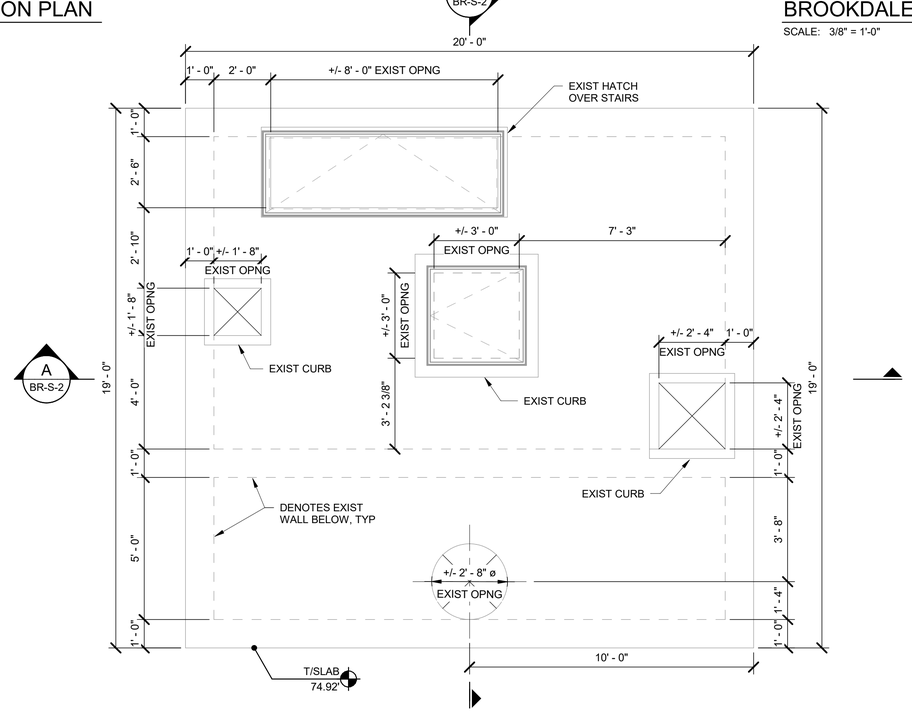

BROOKDALE TOP SLAB PLAN

SCALE: 3/8" = 1'-0"

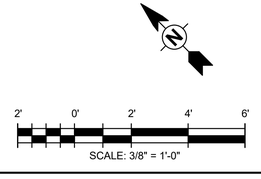

SCALE: 3/8" = 1'-0"

RPS
A TETRA TECH COMPANY
Texas PE Firm Reg. #F-929
575 N. Dairy Ashford, Suite 700,
Houston, Texas 77079
T +1 281 589 7257
E usinfrastructure@rpsgroup.com

SURVEYED BY: KUO Inc.
FB NO. F-4578

This document is released for the purposes of interim review only under the authority of:

Phillip A. Fleming, P.E.
Texas P.E. No. 131982
2/10/26

It is not to be used for bidding, construction, or permitting purposes.

CITY OF HOUSTON

HOUSTON PUBLIC WORKS

RECONSTRUCTION & REHABILITATION
COH LIFT STATIONS

BROOKDALE LS STRUCTURAL PLANS

BR-S-1

WBS NUMBER	FOR CITY OF HOUSTON USE ONLY
R-000267-0178-3	
DRAWING SCALE	
AS NOTED	
CITY OF HOUSTON PM	
TAHA LOTIA	
SHEET NO. 120 OF 268	

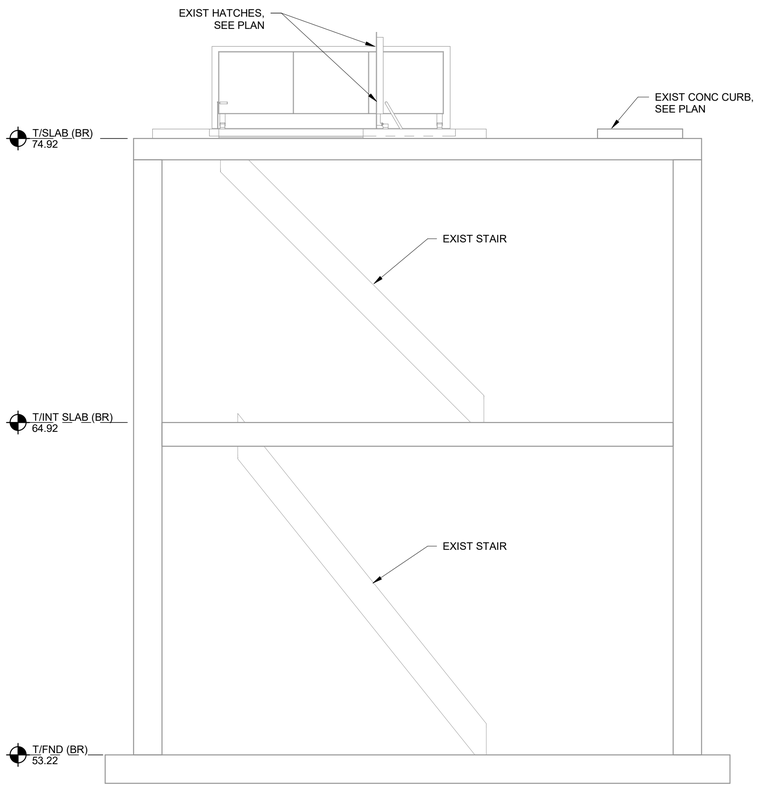

A SECTION
BR-S-2 SCALE: 3/8" = 1'-0"

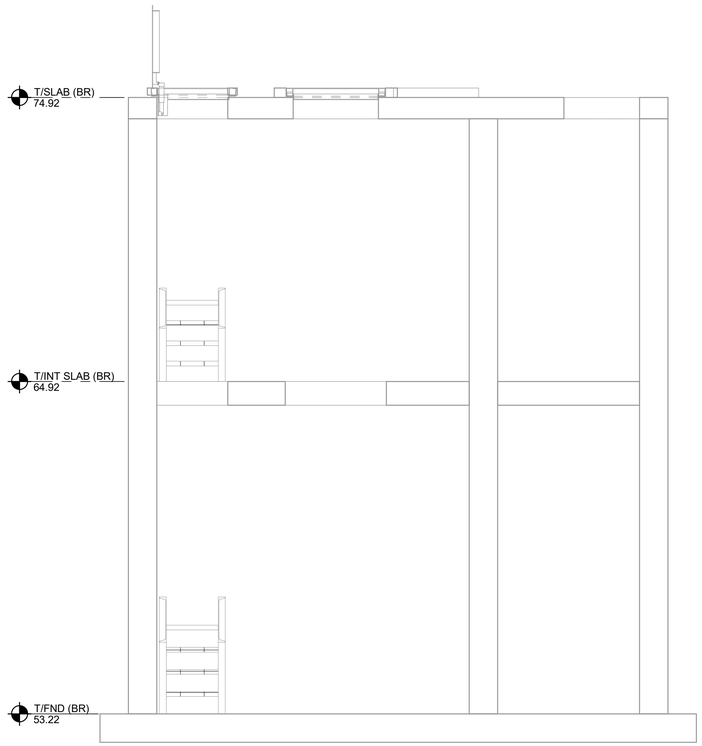

B SECTION
BR-S-2 SCALE: 3/8" = 1'-0"

****BROOKDALE LIFT STATION NEW STRUCTURAL MODIFICATIONS PENDING GEOTECH REPORT****

2' 0' 2' 4' 6'
SCALE: 3/8" = 1'-0"

NO.	DATE	REVISION	APP.

A TETRA TECH COMPANY
Texas PE Firm Reg. #F-929
575 N. Dairy Ashford, Suite 700,
Houston, Texas 77079
T +1 281 589 7257
E usinfrastructure@rpsgroup.com

SURVEYED BY: KUO Inc.
FB NO. F-4578

This document is released for the purposes of interim review only under the authority of:

Phillip A. Fleming, P.E.
Texas P.E. No. 131982
2/10/26

It is not to be used for bidding, construction, or permitting purposes.

CITY OF HOUSTON
HOUSTON PUBLIC WORKS

RECONSTRUCTION & REHABILITATION
COH LIFT STATIONS

BROOKDALE LS STRUCTURAL SECTIONS

BR-S-2

WBS NUMBER	FOR CITY OF HOUSTON USE ONLY
R-000267-0178-3	
DRAWING SCALE	
AS NOTED	
CITY OF HOUSTON PM	
TAHA LOTIA	
SHEET NO. 121 OF 268	

PLOTTED 3/30/2026 10:01:21 AM
PLOT STYLE:
Autodesk Docs://200-317106-24001 COH LS Rehab Design/S-LIFT STATIONS-200-317106-24001_v25.rvt

PLOTTED: 3/27/2026 12:56:29 PM
PLOT STYLE:
Autodesk Docs://200-317106-24001 COH LS Rehab Design/D-LIFT STATIONS-200-317106-24001_v25.rvt

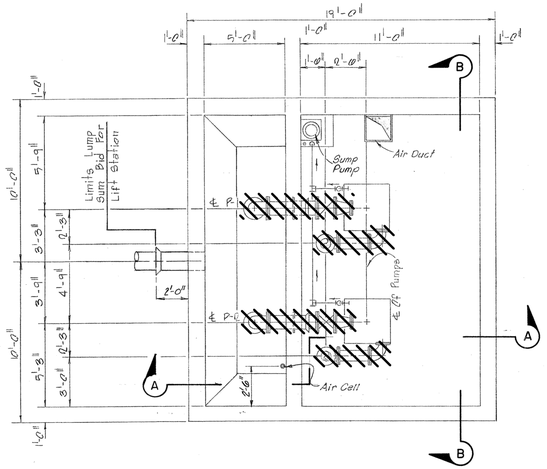

PLAN AT ELEV. 54.25

SCALE 1/4" = 1'-0"

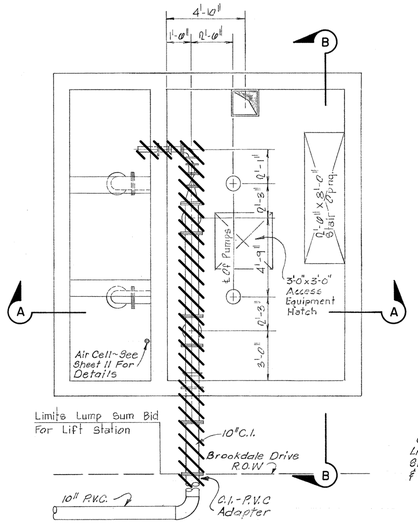

PLAN AT ELEV. 66.00

SCALE 1/4" = 1'-0"

VALVE SCHEDULE		
No.	Description	Spec.
1	Plug Valve : Dezurik Handwheel Operated	H 1114
2	Gate Valve : Crane # 440	None
3	Check Valve : Crane #0.9	None
4	Check Valve: Prince Valve Inc. Series 150 H.D. Cushion Type	H 1108

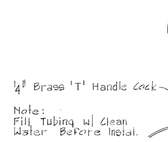

TYPICAL FOR P-1 & P-2

GAUGE DETAIL

N.T.S

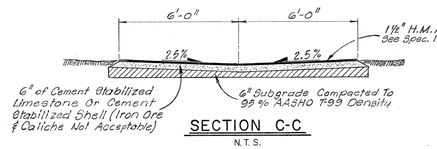

SECTION C-C

N.T.S.

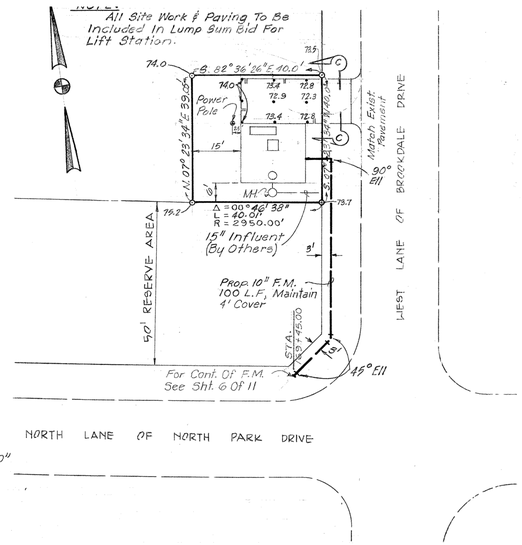

SITE PLAN

SCALE 1"= 20'

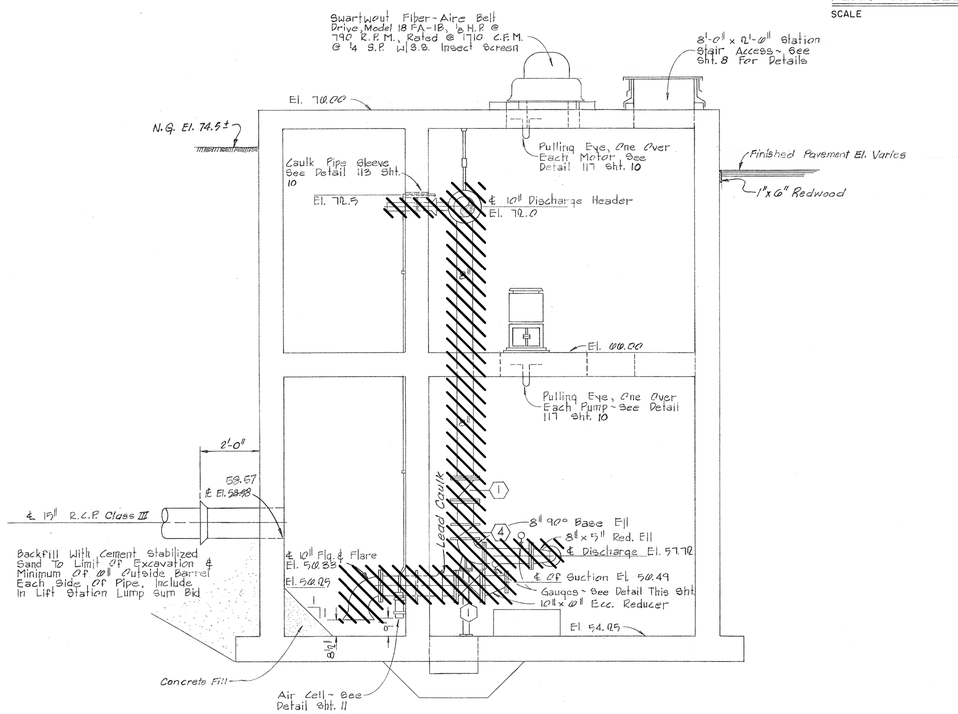

SECTION A-A

SCALE 3/8" = 1'-0"

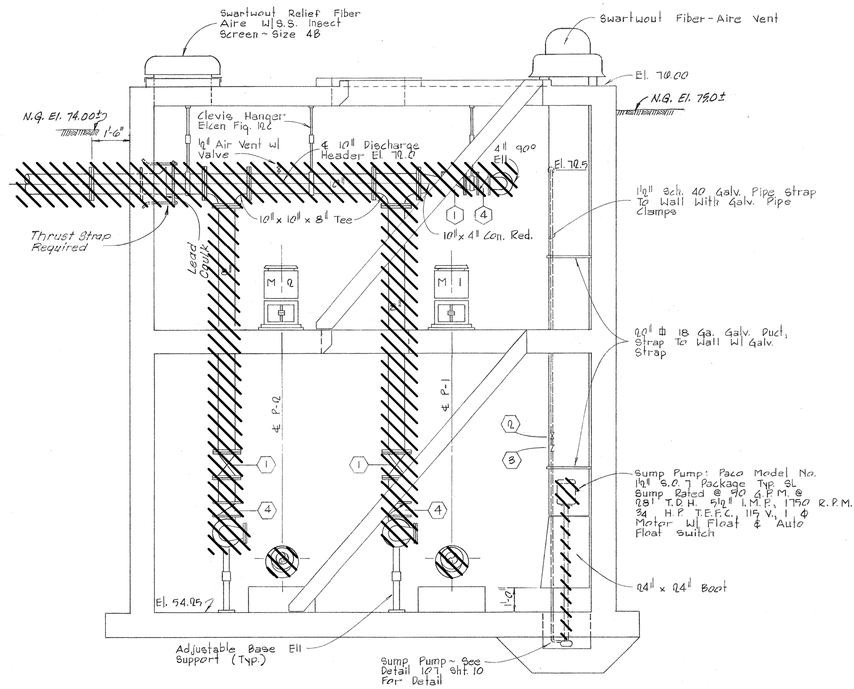

SECTION B-B

SCALE 3/8" = 1'-0"

DEMOLITION NOTES:

1. CONTRACTOR TO REMOVE AND SALVAGE ALL EXISTING PUMPS, VALVES, AND APPURTENANCES.
2. WHEN EQUIPMENT ITEMS ARE INDICATED FOR REMOVAL, ALL ANCILLARY UTILITIES, ELECTRICAL ITEMS, AND SUPPORTS SHALL BE COMPLETELY REMOVED UNLESS OTHERWISE INDICATED.
3. ALL PIPING SHOWN AS BEING REMOVED SHALL BE COMPLETELY REMOVED INCLUDING INSULATION, HANGERS, EXPANSION AND ANCHOR BOLTS, AND PIPE SUPPORTS.
4. EXPANSION AND ANCHOR BOLES REMAINING IN WALL, CEILINGS, OR FLOORS SHALL BE POUNDED OR CUT FLUSH WITH THE SURFACE AND PATCHED TO MATCH THE EXISTING FINISH.
5. ALL OPENINGS REMAINING IN FLOORS, WALLS, OR CEILINGS, INCLUDING SLEEVES, AFTER PIPE OR CONDUIT DEMOLITION SHALL BE PATCHED TO MATCH THE EXISTING SURFACE. PENETRATIONS BETWEEN AREAS LABELED NEMA 4 AND NEMA 7 SHALL BE SEALED GAS TIGHT.

-ITEMS TO BE REMOVED

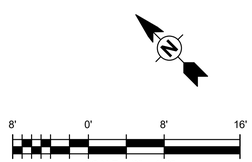

NO.	DATE	REVISION	APP.

rps
A TETRA TECH COMPANY
Texas PE Firm Reg. #F-929
575 N. Dairy Ashford, Suite 700, Houston, Texas 77079
T +1 281 589 7257
E usinfrastructure@rpsgroup.com

SURVEYED BY: KUCO INC.

FB NO. F-4578

This document is released for the purposes of interim review only under the authority of:

Jeremy Austin, P.E.
Texas P.E. No. 116816
03/30/2026

It is not to be used for bidding, construction, or permitting purposes.

CITY OF HOUSTON

HOUSTON PUBLIC WORKS

RECONSTRUCTION & REHABILITATION
COH LIFT STATIONS

BROOKDALE LS DEMOLITION PLAN

BR-D-1

WBS NUMBER	FOR CITY OF HOUSTON USE ONLY
R-000267-00178-3	
DRAWING SCALE	
AS NOTED	
CITY OF HOUSTON PM	
TAHA LOTIA	
SHEET NO. 122 OF 268	

NOTES:
1. SEE DETAIL AND STRUCTURAL DRAWINGS FOR DIMENSIONS AND INFORMATION NOT SHOW.
2. ALL PIPING TO BE FLANGED, NO FLANGED COUPLING ADAPTERS OR VICTAULIC STYLE COUPLINGS PERMITTED.
3. DIMENSIONS NOTED ARE RELATIVE TO THE PUMP SIZE AND MANUFACTURER SELECTED. CONTRACTOR SHALL VERIFY SIZE AND LOCATION OF HATCHES WITH PUMP MANUFACTURER.
4. INSTALL PLUG VALVES TO OPEN UPWARD AND CLOSE TO A SEATED POSITION.
5. INSTALL CHECK VALVES SO THAT THE WEIGHT LEVER POSITION IS APPROXIMATELY 45 DEGREES BELOW THE VALVE HORIZONTAL CENTER LINE IN THE CLOSED POSITION; AND APPROXIMATELY 45 DEGREES ABOVE THE VALVE HORIZONTAL CENTER LINE IN THE FULL OPEN POSITION.
6. LABEL HATCHES WITH THE CORRESPONDING PUMP NUMBER USING A 12-INCH BY 12-INCH 316SS PLATE ENGRAVED WITH 6-INCH LETTERING WELDED TO THE HATCH.
7. PUMP BASIS OF DESIGN IS NP 3127 MT 3~ ADAPTIVE 439 WITH 187MM DIAMETER IMPELLER.

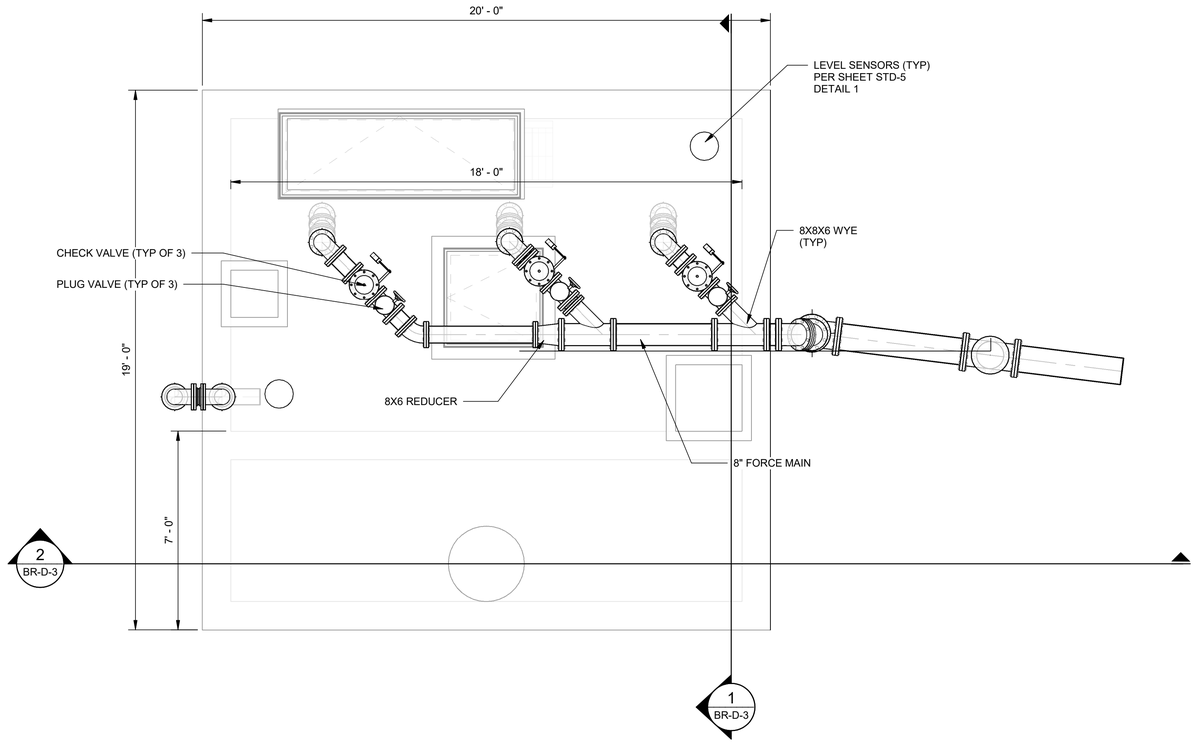

1 BROOKDALE PLAN VIEW
SCALE: 3/8" = 1'-0"

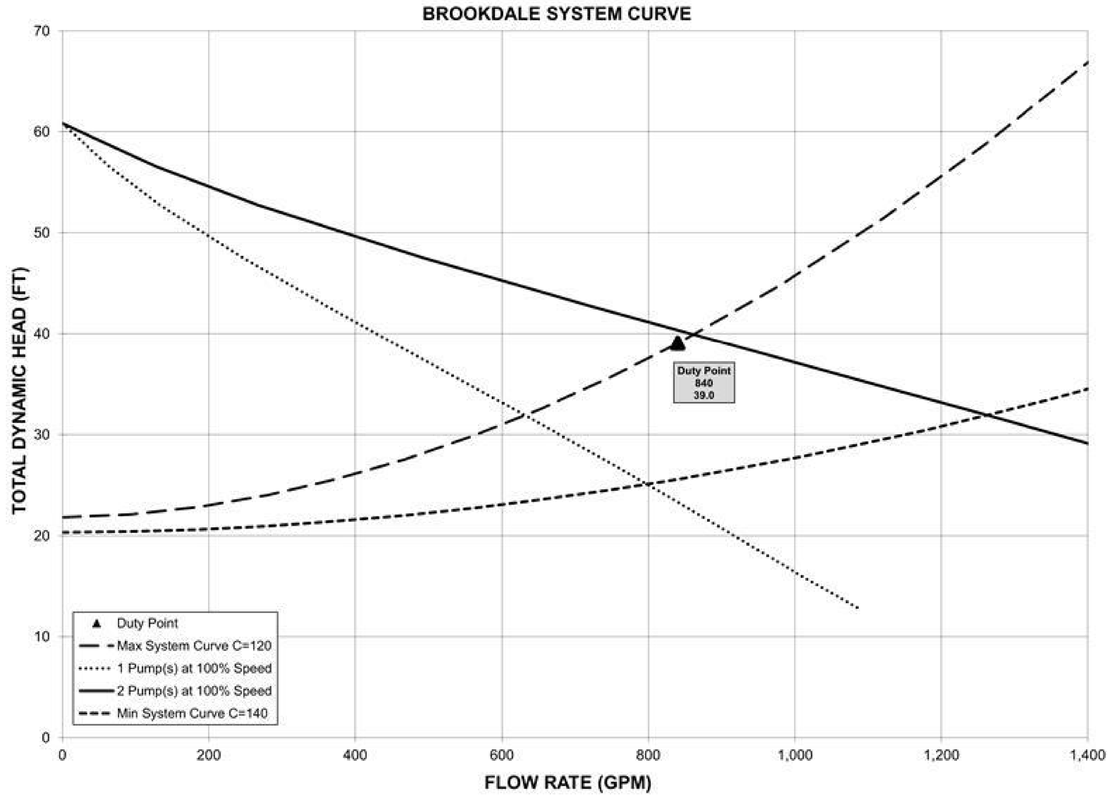

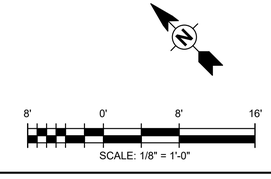

NO.	DATE	REVISION	APP.

RPS A TETRA TECH COMPANY
Texas PE Firm Reg. #F-929
575 N. Dairy Ashford, Suite 700, Houston, Texas 77079
T +1 281 589 7257
E usinfrastructure@rpsgroup.com

SURVEYED BY: KUCO INC.
FB NO. F-4578

This document is released for the purposes of interim review only under the authority of:
Jeremy Austin, P.E.
Texas P.E. No. 116816
03/30/2026
It is not to be used for bidding, construction, or permitting purposes.

CITY OF HOUSTON
HOUSTON PUBLIC WORKS

RECONSTRUCTION & REHABILITATION
COH LIFT STATIONS

BROOKDALE LS PLAN

BR-D-2

WBS NUMBER	FOR CITY OF HOUSTON USE ONLY
R-000267-00178-3	
DRAWING SCALE	
AS NOTED	
CITY OF HOUSTON PM	
TAHA LOTIA	
SHEET NO. 123 OF 268	

PLOTTED: 3/27/2026 12:56:32 PM
PLOT STYLE:
Autodesk Docs://200-317106-24001 COH LS Rehab Design/D-LIFT STATIONS-200-317106-24001_v25.rvt

NOTES:
1. SEE DETAIL AND STRUCTURAL DRAWINGS FOR DIMENSIONS AND INFORMATION NOT SHOW.
2. ALL PIPING TO BE FLANGED, NO FLANGED COUPLING ADAPTERS OR VICTAULIC STYLE COUPLINGS PERMITTED.
3. DIMENSIONS NOTED ARE RELATIVE TO THE PUMP SIZE AND MANUFACTURER SELECTED. CONTRACTOR SHALL VERIFY SIZE AND LOCATION OF HATCHES WITH PUMP MANUFACTURER.
4. INSTALL PLUG VALVES TO OPEN UPWARD AND CLOSE TO A SEATED POSITION.
5. INSTALL CHECK VALVES SO THAT THE WEIGHT LEVER POSITION IS APPROXIMATELY 45 DEGREES BELOW THE VALVE HORIZONTAL CENTER LINE IN THE CLOSED POSITION; AND APPROXIMATELY 45 DEGREES ABOVE THE VALVE HORIZONTAL CENTER LINE IN THE FULL OPEN POSITION.
6. LABEL HATCHES WITH THE CORRESPONDING PUMP NUMBER USING A 12-INCH BY 12-INCH 316SS PLATE ENGRAVED WITH 6-INCH LETTERING WELDED TO THE HATCH.
7. PUMP BASIS OF DESIGN IS FLYGT NP 3127 MT 3~ ADAPTIVE 439 WITH 187 MM DIAMETER IMPELLER.

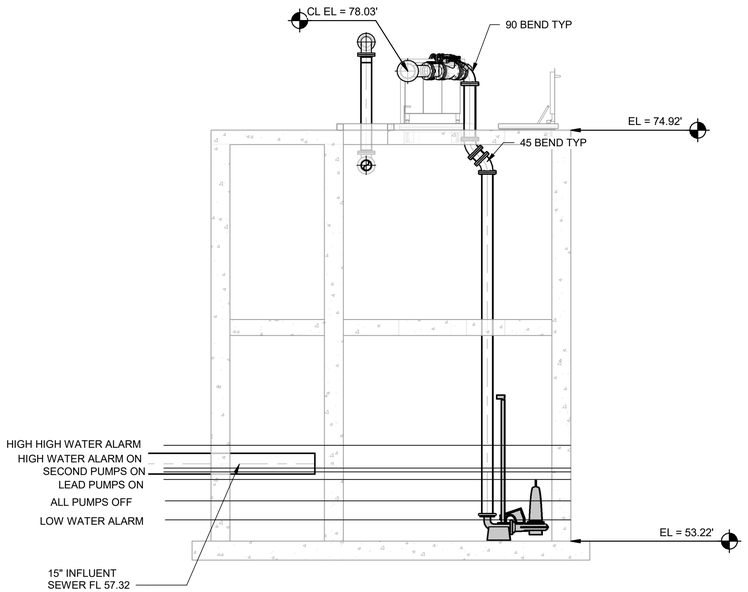

1 BR-D-2 BROOKDALE SECTION
SCALE: 1/4" = 1'-0"

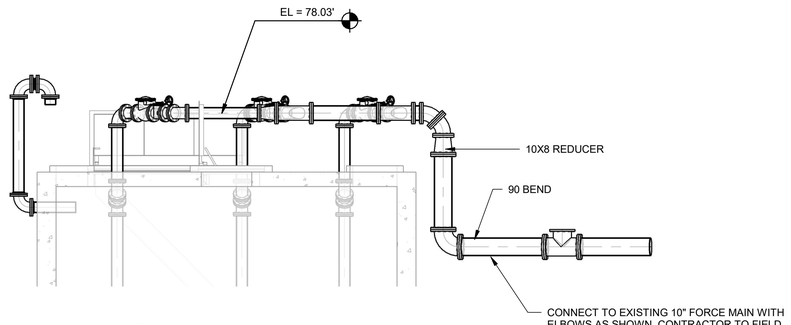

2 BR-D-2 BROOKDALE SECTION VIEW
SCALE: 1/4" = 1'-0"

PUMP DATA TABLE

PUMP CHARACTERISTICS	PUMP NO. 1	PUMP NO. 2	PUMP NO. 3
MOTOR DATA			
NOMINAL SIZE (HP)	10	10	10
MAX SPEED (RPM)	1735	1735	1735
SOLIDS PASSAGE			
MIN SPHERE (IN)	3.15	3.15	3.15
CAPACITY (GPM)			
DESIGN	420	420	420
RUNOUT	1,090	1,090	1,090
DISCHARGE HEAD (FT)			
DESIGN	40.06	40.06	40.06
RUNOUT	12.65	12.65	12.65
SHUTOFF	60.82	60.82	60.82
EFFICIENCY (%)			
DESIGN	58.49	58.49	58.49
NPSHR (FT)			
DESIGN	13.11	13.11	13.11
RUNOUT	20.34	20.34	20.34
PUMP CYCLE TIME	6	6	6
CUMULATIVE CAPACITY (GPM)	630	854	-

RISING LEVEL CYCLE

WATER LEVEL DEPTH	WATER LEVEL ELEVATION	ACTION	PUMP(S) IN OPERATION
2.12	55.34	PUMPS OFF LEVEL - NO ACTION	ALL PUMPS OFF
3.27	56.49	LEAD PUMP TURNS ON	LEAD PUMP ON
3.67	56.89	SECOND PUMP TURNS ON	LEAD & SECOND PUMPS ON
3.87	57.09	HIGH WATER LEVEL ALARM ON	HIGH WATER ALARM SOUND
5.07	58.29	HIGH HIGH WATER LEVEL ALARM (FLOAT ON LEVEL)	ALL PUMPS ON FLOATS

FALLING LEVEL CYCLE

WATER LEVEL DEPTH	WATER LEVEL ELEVATION	ACTION	PUMP(S) IN OPERATION
5.07	58.29	FLOAT OFF LEVEL	ALL PUMPS OFF FLOATS
3.87	57.09	HIGH WATER LEVEL ALARM OFF	LEAD & SECOND PUMPS ON
3.67	56.89	LEAD PUMP TURNS OFF	SECOND PUMP ON
3.27	56.49	SECOND PUMP TURNS OFF	ALL PUMPS STOPPED - STANDBY PUMP SWITCHES TO LEAD PUMP
1.12	54.34	LOW LEVEL ALARM	-

8' 0' 8' 16'
SCALE: 1/8" = 1'-0"

NO.	DATE	REVISION	APP.

RPS A TETRA TECH COMPANY
Texas PE Firm Reg. #F-929
575 N. Dairy Ashford, Suite 700, Houston, Texas 77079
T +1 281 589 7257
E usinfrastructure@rpsgroup.com

SURVEYED BY: KUCO INC.
FB NO. F-4578

This document is released for the purposes of interim review only under the authority of:
Jeremy Austin, P.E.
Texas P.E. No. 116816
03/30/2026
It is not to be used for bidding, construction, or permitting purposes.

CITY OF HOUSTON
HOUSTON PUBLIC WORKS

RECONSTRUCTION & REHABILITATION
COH LIFT STATIONS

BROOKDALE LS SECTIONS

BR-D-3

WBS NUMBER	FOR CITY OF HOUSTON USE ONLY
R-000267-00178-3	
DRAWING SCALE	
AS NOTED	
CITY OF HOUSTON PM	
TAHA LOTIA	
SHEET NO. 124 OF 268	

PLOTTED: 3/27/2026 12:56:35 PM
PLOT STYLE:
Autodesk Docs://200-317106-24001 COH LS Rehab Design/D-LIFT STATIONS-200-317106-24001_v25.rvt

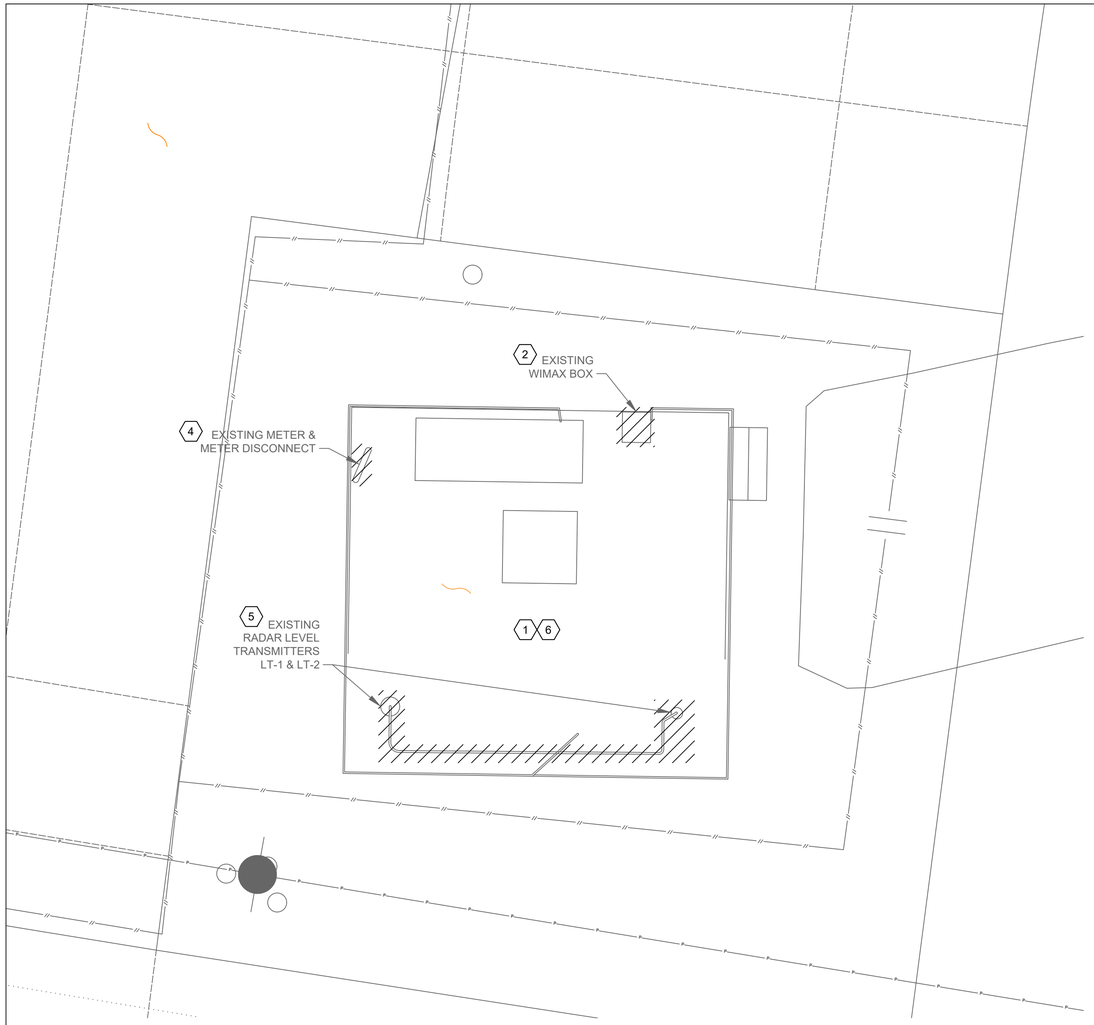

BROOKDALE ELECTRICAL
EXISTING SITE
PLAN
1"= 4'-0"



EXISTING METER & METER DISCONNECT
PHOTOGRAPH A - NTS (4)



EXISTING WIMAX BOX
PHOTOGRAPH B - NTS (2)



EXISTING WIMAX POLE
PHOTOGRAPH C - NTS (3)



EXISTING LEVEL TRANSMITTER LT-1 & LT-2 & JUNCTION BOX
PHOTOGRAPH D - NTS (5)

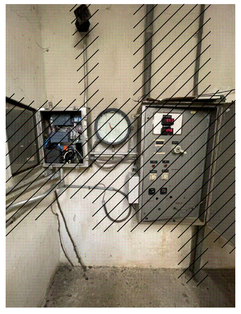

EXISTING POWER PANEL & CONTROL PANEL
PHOTOGRAPH E - NTS (1)

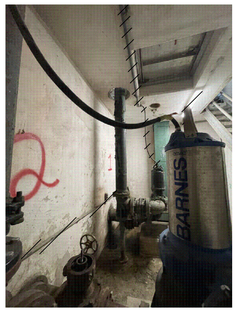

EXISTING LIGHTING & RECEPTACLES (IN DRY WELL)
PHOTOGRAPH F - NTS (6)

NOTES BY SYMBOL "(#)":

1. EXISTING POWER PANEL AND CONTROL PANEL AND ASSOCIATED CONDUITS, WIRE, AND FIELD DEVICES TO BE DEMOLISHED AND REMOVED.
2. EXISTING WIMAX BOX AND ASSOCIATED CONDUITS, WIRE, TO BE DEMOLISHED AND REMOVED.
3. EXISTING WIMAX POLE AND ASSOCIATED CONDUITS, WIRE, TO BE DEMOLISHED AND REMOVED.
4. EXISTING SERVICE POLE, METER, AND DISCONNECT AND ASSOCIATED CONDUITS, WIRE, TO BE DEMOLISHED AND REMOVED.
5. EXISTING LEVEL TRANSMITTERS LT-1 & LT-2, AND ASSOCIATED CONDUITS, WIRE, TO BE DEMOLISHED AND REMOVED.
6. EXISTING LIGHTING AND RECEPTACLES, AND ASSOCIATED CONDUITS, WIRE, TO BE DEMOLISHED AND REMOVED.

NO.	DATE	REVISION	APP.
	MM/DD/YY	BRIEF DESCRIPTION	XXX
	MM/DD/YY	BRIEF DESCRIPTION	XXX
	MM/DD/YY	BRIEF DESCRIPTION	XXX

RPS
A TETRA TECH COMPANY
Texas PE Firm Reg. #F-929
575 N. Dairy Ashford, Suite 700,
Houston, Texas 77079
T +1 281 589 7257
E usinfrastructure@rpsgroup.com

FOR INTERIM REVIEW ONLY NOT INTENDED FOR PERMIT, BIDDING OR CONSTRUCTION PURPOSES.
ENGINEER:
HOSS FOROUZAN
P.E. SERIAL NO.77748
03/30/2026

SURVEYED BY:
FB NO. F-4578

CITY OF HOUSTON
HOUSTON PUBLIC WORKS

RECONSTRUCTION & REHABILITATION
COH LIFT STATIONS

BROOKDALE LIFT STATION ELECTRICAL DEMOLITION SITE PLAN

WBS NUMBER	FOR CITY OF HOUSTON USE ONLY
R-000267-00178-3	
DRAWING SCALE	
AS NOTED	
CITY OF HOUSTON PM	
TAHA LOTIA	
SHEET NO. 125 OF 268	

BR-E-1

FILE PATH: O:\H8109_Lift Station Rehabilitation And Reconstruction (Tetratech)\6 Drawings\Electrical\Working\Brookdale\Brookdale_E-01.dwg PLOT STYLE: COH.ctb PLOTTED: 3/26/2026 5:50 PM

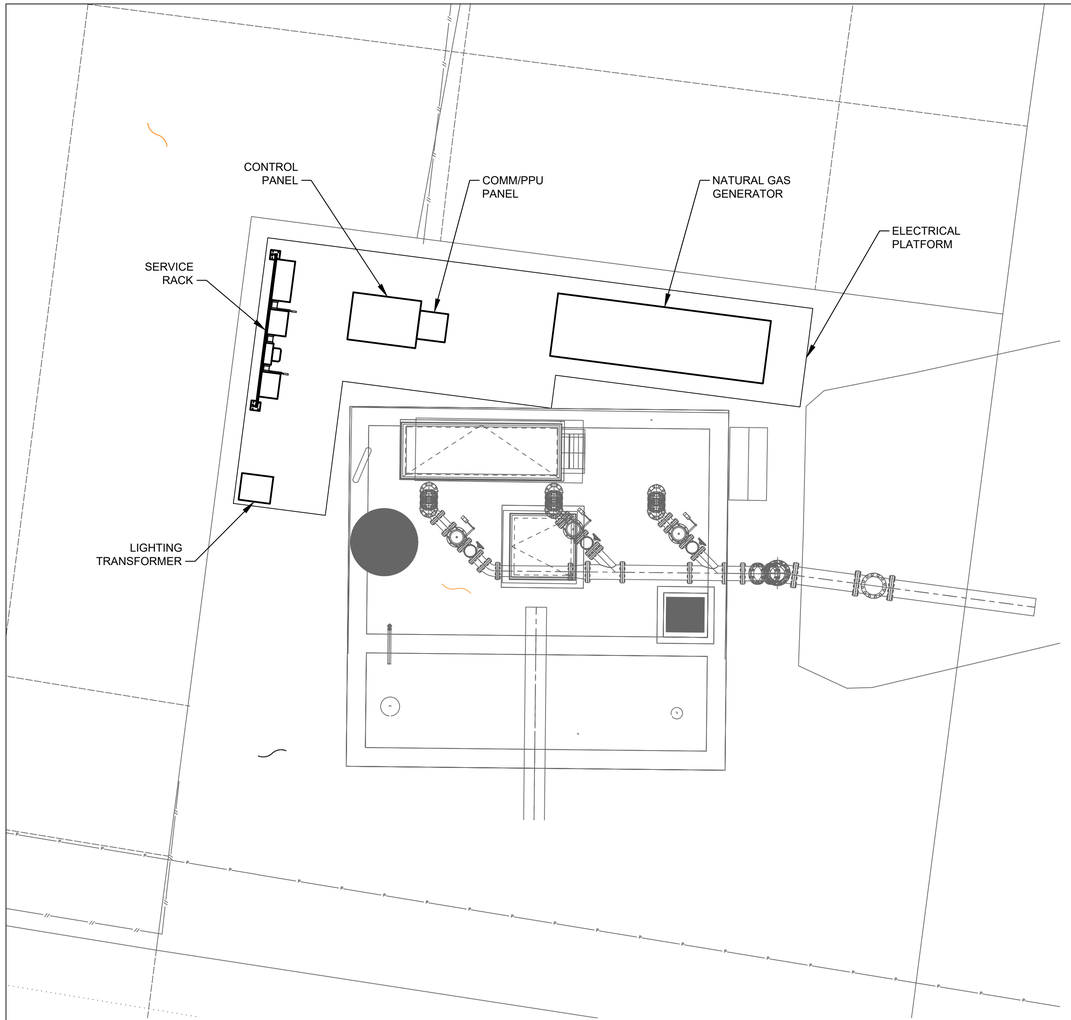

BROOKDALE ELECTRICAL
PROPOSED SITE

PLAN

1"= 4'-0"

NO.	DATE	REVISION	APP.
	MM/DD/YY	BRIEF DESCRIPTION	XXX
	MM/DD/YY	BRIEF DESCRIPTION	XXX
	MM/DD/YY	BRIEF DESCRIPTION	XXX

RPS
A TETRA TECH COMPANY
Texas PE Firm Reg. #F-929
575 N. Dairy Ashford, Suite 700,
Houston, Texas 77079
T +1 281 589 7257
E usinfrastructure@rpsgroup.com

SURVEYED BY:
FB NO. F-4578

FOR INTERIM REVIEW ONLY NOT INTENDED FOR PERMIT, BIDDING OR CONSTRUCTION PURPOSES.
ENGINEER:
HOSS FOROUZAN
P.E. SERIAL NO.77748
03/30/2026

CITY OF HOUSTON
HOUSTON PUBLIC WORKS

RECONSTRUCTION & REHABILITATION
COH LIFT STATIONS

BROOKDALE LIFT STATION ELECTRICAL PROPOSED SITE PLAN

WBS NUMBER	FOR CITY OF HOUSTON USE ONLY
R-000267-00178-3	
DRAWING SCALE	
AS NOTED	
CITY OF HOUSTON PM	
TAHA LOTIA	
SHEET NO. 126 OF 268	

BR-E-2

FILE PATH: O:\H8109_Lift Station Rehabilitation And Reconstruction (Tetratech)\6 Drawings\Electrical\Working\Brookdale\Brookdale_E-02.dwg PLOT STYLE: COH.ctb PLOTTED: 3/27/2026 11:36 AM

FILE PATH: O:\H8109_Lift Station Rehabilitation And Reconstruction (Tetratech)\6 Drawings\Electrical\Working\Brookdale\Brookdale_E-03.dwg PLOT STYLE: GAI.ctb PLOTTED: 3/26/2026 5:50 PM

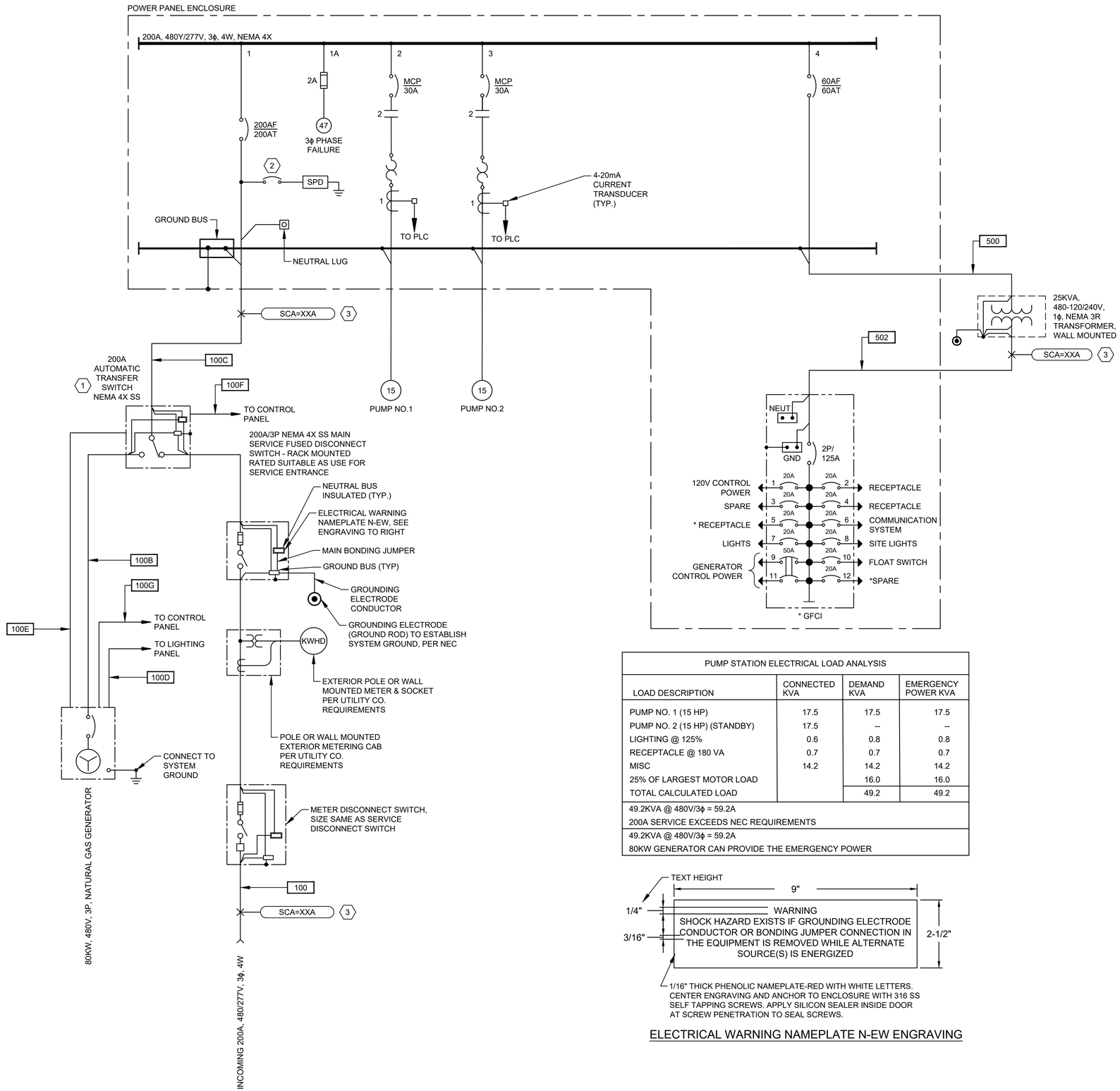

NOTES BY SYMBOL "⟨#⟩":

1. PROVIDE A NORMALLY OPEN (NO) AUXILIARY CONTACT ON BOTH ON POSITIONS.
2. PROVIDE BREAKER ACCORDING TO MANUFACTURER'S REQUIREMENTS.
3. POINT TO POINT METHOD IS USED FOR SHORT CIRCUIT CURRENT CALCULATION.
4. CONTRACTOR SHALL PROVIDE A PERMANENTLY AFFIXED LABEL (2' X 3") SHOWING THE AVAILABLE FAULT CURRENT AND CALCULATION DATE. THE LABEL SHALL BE BLUE LETTERING ON A CONTRASTING BACKGROUND.
5. THE INSULATION TYPES OF ALL ELECTRICAL CONDUCTORS USED IN THE PROJECT HAVE BEEN SPECIFIED IN ELECTRICAL SPECIFICATIONS (16120, 16121, AND 16122). THE TYPES OF CONDUITS USED IN THE PROJECT HAS BEEN SPECIFIED IN ELECTRICAL SPECIFICATIONS 16111.

NO.	DATE	REVISION	APP.
	MM/DD/YY	BRIEF DESCRIPTION	XXX
	MM/DD/YY	BRIEF DESCRIPTION	XXX
	MM/DD/YY	BRIEF DESCRIPTION	XXX

PUMP STATION ELECTRICAL LOAD ANALYSIS

LOAD DESCRIPTION	CONNECTED KVA	DEMAND KVA	EMERGENCY POWER KVA
PUMP NO. 1 (15 HP)	17.5	17.5	17.5
PUMP NO. 2 (15 HP) (STANDBY)	17.5	--	--
LIGHTING @ 125%	0.6	0.8	0.8
RECEPTACLE @ 180 VA	0.7	0.7	0.7
MISC	14.2	14.2	14.2
25% OF LARGEST MOTOR LOAD		16.0	16.0
TOTAL CALCULATED LOAD		49.2	49.2
49.2KVA @ 480V/3ϕ = 59.2A 200A SERVICE EXCEEDS NEC REQUIREMENTS			
49.2KVA @ 480V/3ϕ = 59.2A 80KW GENERATOR CAN PROVIDE THE EMERGENCY POWER			

1/16" THICK PHENOLIC NAMEPLATE-RED WITH WHITE LETTERS. CENTER ENGRAVING AND ANCHOR TO ENCLOSURE WITH 316 SS SELF TAPPING SCREWS. APPLY SILICON SEALER INSIDE DOOR AT SCREW PENETRATION TO SEAL SCREWS.

ELECTRICAL WARNING NAMEPLATE N-EW ENGRAVING

RPS A TETRA TECH COMPANY
Texas PE Firm Reg. #F-929
575 N. Dairy Ashford, Suite 700, Houston, Texas 77079
T +1 281 589 7257
E usinfrastructure@rpsgroup.com

SURVEYED BY:
FB NO. F-4578

FOR INTERIM REVIEW ONLY NOT INTENDED FOR PERMIT, BIDDING OR CONSTRUCTION PURPOSES.
ENGINEER:
HOSS FOROUZAN
P.E. SERIAL NO.77748
03/30/2026

CITY OF HOUSTON
HOUSTON PUBLIC WORKS

RECONSTRUCTION & REHABILITATION
COH LIFT STATIONS

BROOKDALE LIFT STATION ELECTRICAL SINGLE LINE DIAGRAM

WBS NUMBER	FOR CITY OF HOUSTON USE ONLY
R-000267-00178-3	
DRAWING SCALE	
AS NOTED	
CITY OF HOUSTON PM	
TAHA LOTIA	
SHEET NO. 127 OF 268	

BR-E-3

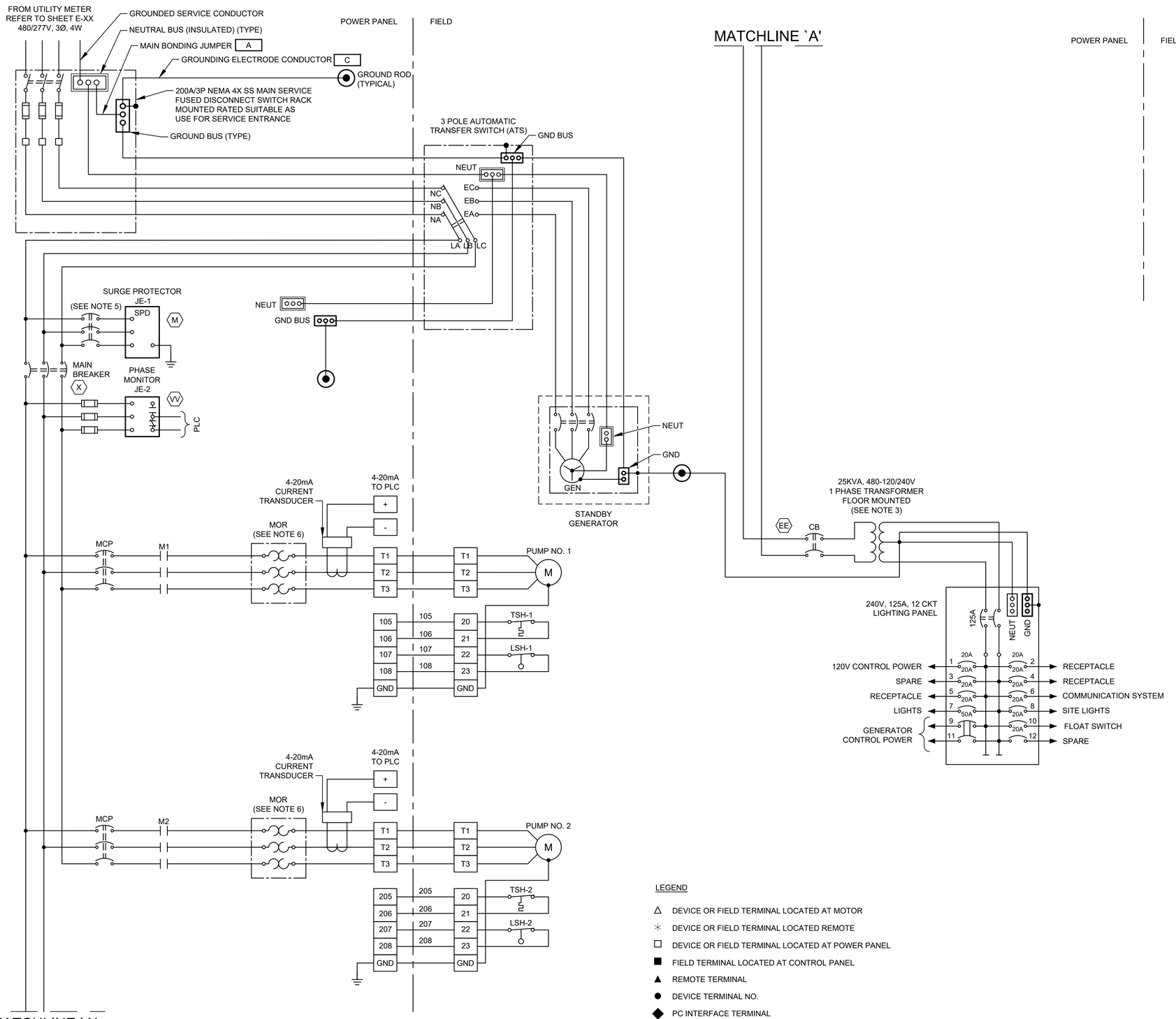

NOTES:

1. UNLESS OTHERWISE INDICATED, ALL DEVICES WITHOUT FURTHER DESIGNATION ARE LOCATED AT THE CONTROL PANEL.
2. NOT USED.
3. CONTRACTOR TO REVISE DWG. BASED ON MANUFACTURE AND SIZE.
4. CONTRACTOR SHALL TERMINATE POWER & CONTROL WIRES PER MANUFACTURER'S REQUIREMENTS.
5. PROVIDE BREAKER SIZE ACCORDING TO MANUFACTURER'S REQUIREMENTS.
6. THE COMBINATION OF CT AND MOTOR OVERLOAD RELAY IF REQUIRED.

LEGEND

- △ DEVICE OR FIELD TERMINAL LOCATED AT MOTOR
- ✳ DEVICE OR FIELD TERMINAL LOCATED REMOTE
- □ DEVICE OR FIELD TERMINAL LOCATED AT POWER PANEL
- ■ FIELD TERMINAL LOCATED AT CONTROL PANEL
- ▲ REMOTE TERMINAL
- ● DEVICE TERMINAL NO.
- ◆ PC INTERFACE TERMINAL

NO.	DATE	REVISION	APP.
	MM/DD/YY	BRIEF DESCRIPTION	XXX
	MM/DD/YY	BRIEF DESCRIPTION	XXX
	MM/DD/YY	BRIEF DESCRIPTION	XXX

RPS A TETRA TECH COMPANY
Texas PE Firm Reg. #F-929
575 N. Dairy Ashford, Suite 700, Houston, Texas 77079
T +1 281 589 7257
E usinfrastructure@rpsgroup.com

SURVEYED BY:
FB NO. F-4578

FOR INTERIM REVIEW ONLY NOT INTENDED FOR PERMIT, BIDDING OR CONSTRUCTION PURPOSES.
ENGINEER:
HOSS FOROUZAN
P.E. SERIAL NO.77748
03/30/2026

CITY OF HOUSTON
HOUSTON PUBLIC WORKS

RECONSTRUCTION & REHABILITATION
COH LIFT STATIONS

BROOKDALE LIFT STATION ELECTRICAL THREE LINE DIAGRAM

WBS NUMBER	FOR CITY OF HOUSTON USE ONLY
R-000267-00178-3	
DRAWING SCALE	
AS NOTED	
CITY OF HOUSTON PM	
TAHA LOTIA	
SHEET NO. 128 OF 268	

BR-E-4

FILE PATH: O:\H8109_Lift Station Rehabilitation And Reconstruction (Tetratech)\6 Drawings\Electrical\Working\Brookdale\Brookdale_E-04.dwg PLOT STYLE: GAI.ctb PLOTTED: 3/26/2026 5:50 PM

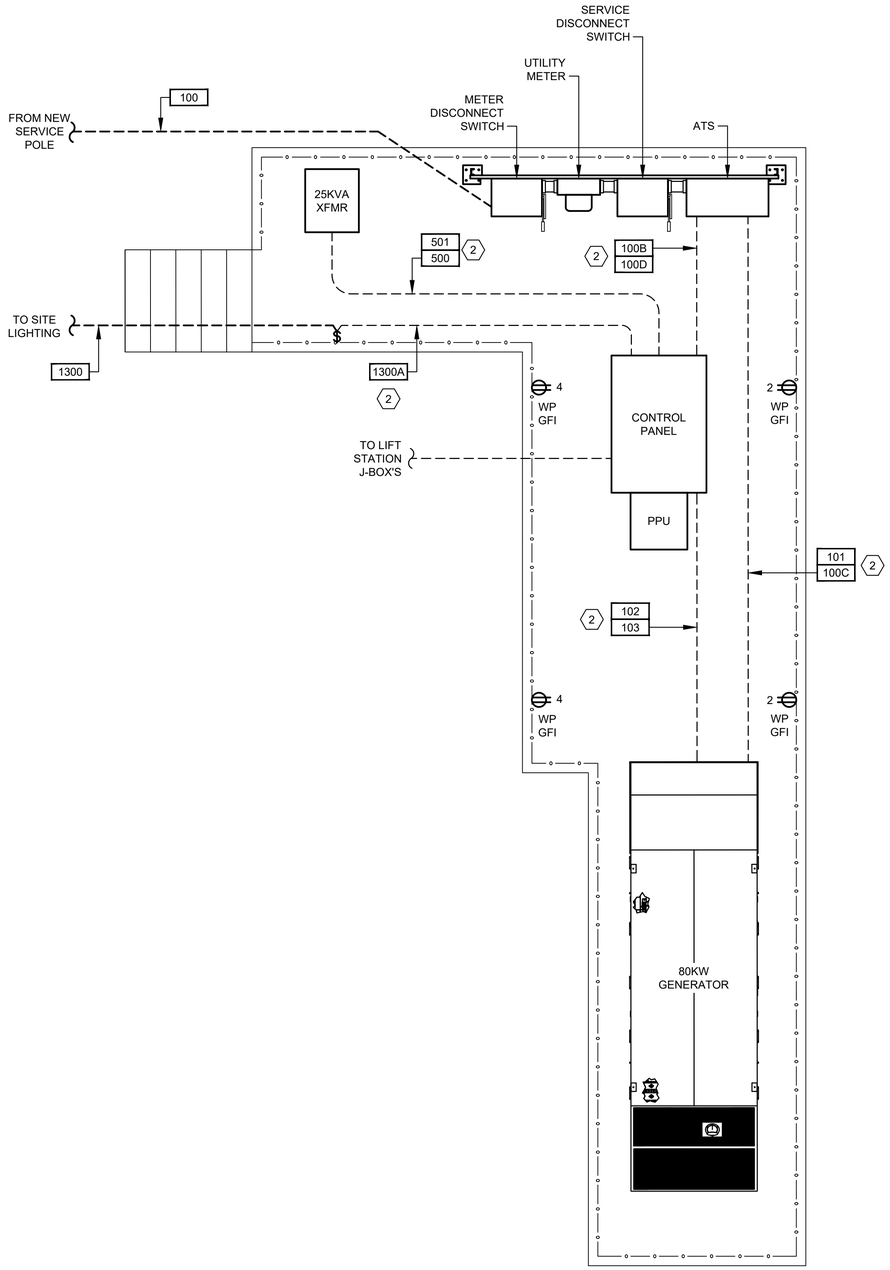

PROPOSED ELECTRICAL PLATFORM LAYOUT

DETAIL 1 (1) (3)

1" = 2'-0"

NOTES BY SYMBOL "(#)":

1. REFER TO STRUCTURAL DRAWINGS FOR PLATFORM DETAILS.
2. CONDUIT TO BE INSTALLED BELOW PLATFORM.
3. GENERATOR NOISE LEVEL SHALL MEET LOCAL NOISE REQUIREMENTS AT 65dBA DAYTIME AND 58 dBA NIGHTTIME.

NO.	DATE	REVISION	APP.
	MM/DD/YY	BRIEF DESCRIPTION	XXX
	MM/DD/YY	BRIEF DESCRIPTION	XXX
	MM/DD/YY	BRIEF DESCRIPTION	XXX

Texas PE Firm Reg. #F-929
575 N. Dairy Ashford, Suite 700,
Houston, Texas 77079
T +1 281 589 7257
E usinfrastructure@rpsgroup.com

SURVEYED BY:
FB NO. F-4578

FOR INTERIM REVIEW ONLY NOT INTENDED FOR PERMIT, BIDDING OR CONSTRUCTION PURPOSES.
ENGINEER:
HOSS FOROUZAN
P.E. SERIAL NO.77748
03/30/2026

CITY OF HOUSTON
HOUSTON PUBLIC WORKS

RECONSTRUCTION & REHABILITATION
COH LIFT STATIONS

BROOKDALE LIFT STATION PROPOSED ELECTRICAL PLATFORM LAYOUT

WBS NUMBER	FOR CITY OF HOUSTON USE ONLY
R-000267-00178-3	
DRAWING SCALE	
AS NOTED	
CITY OF HOUSTON PM	
TAHA LOTIA	
SHEET NO. 129 OF 268	

BR-E-5

FILE PATH: O:\H8109_Lift Station Rehabilitation And Reconstruction (Tetratech)\6 Drawings\Electrical\Working\Brookdale\Brookdale_E-05.dwg PLOT STYLE: GAI.ctb PLOTTED: 3/26/2026 5:50 PM

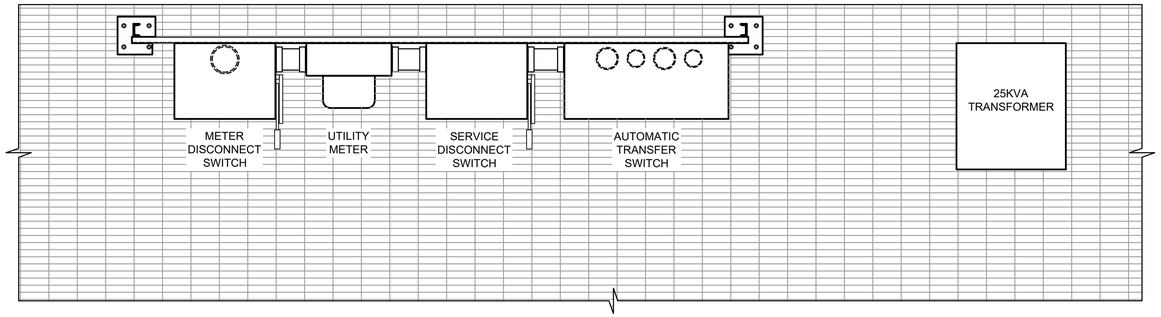

PLAN VIEW

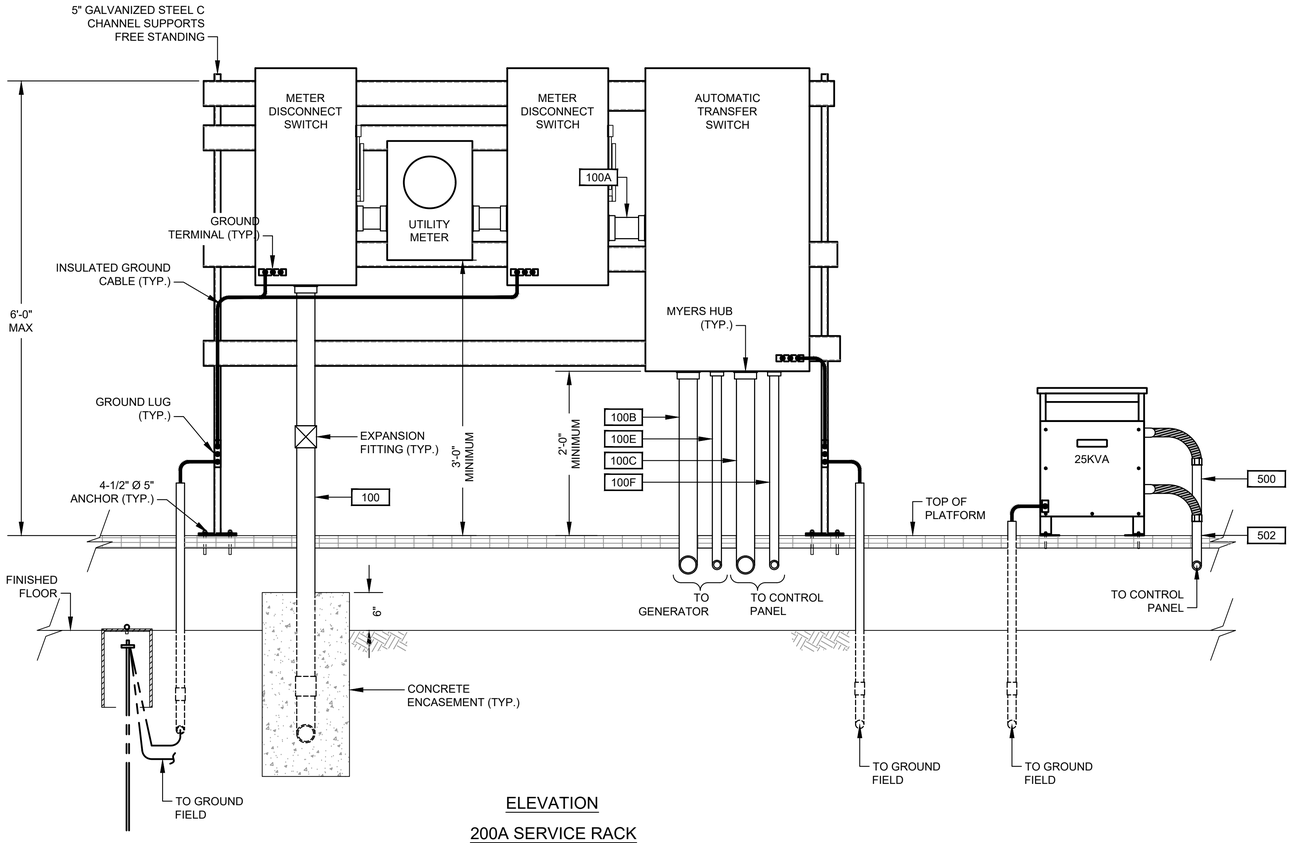

ELEVATION

200A SERVICE RACK

NO.	DATE	REVISION	APP.
	MM/DD/YY	BRIEF DESCRIPTION	XXX
	MM/DD/YY	BRIEF DESCRIPTION	XXX
	MM/DD/YY	BRIEF DESCRIPTION	XXX

RPS A TETRA TECH COMPANY
Texas PE Firm Reg. #F-929
575 N. Dairy Ashford, Suite 700,
Houston, Texas 77079
T +1 281 589 7257
E usinfrastructure@rpsgroup.com

SURVEYED BY:
FB NO. F-4578

FOR INTERIM REVIEW ONLY NOT INTENDED FOR PERMIT, BIDDING OR CONSTRUCTION PURPOSES.
ENGINEER:
HOSS FOROUZAN
P.E. SERIAL NO.77748
03/30/2026

CITY OF HOUSTON
HOUSTON PUBLIC WORKS

RECONSTRUCTION & REHABILITATION
COH LIFT STATIONS

BROOKDALE LIFT STATION ELECTRICAL SERVICE RACK DETAIL

WBS NUMBER	FOR CITY OF HOUSTON USE ONLY
R-000267-00178-3	
DRAWING SCALE	
AS NOTED	
CITY OF HOUSTON PM	
TAHA LOTIA	
SHEET NO. 130 OF 268	

BR-E-6

FILE PATH: O:\H8109_Lift Station Rehabilitation And Reconstruction (Tetratech)\6 Drawings\Electrical\Working\Brookdale\Brookdale_E-06.dwg PLOT STYLE: GAI.ctb PLOTTED: 3/26/2026 5:51 PM

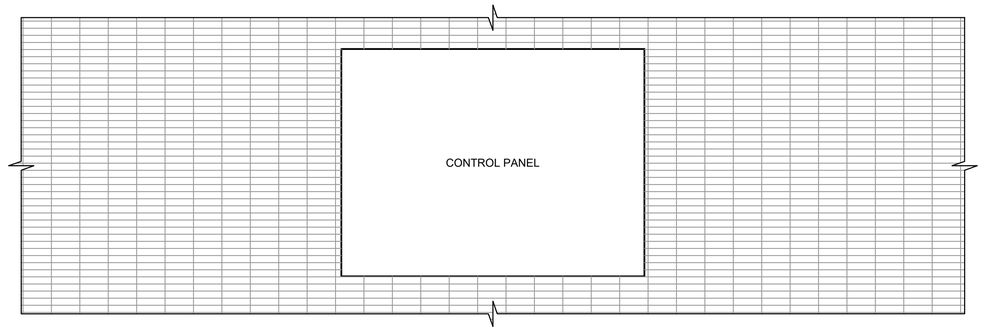

PLAN VIEW

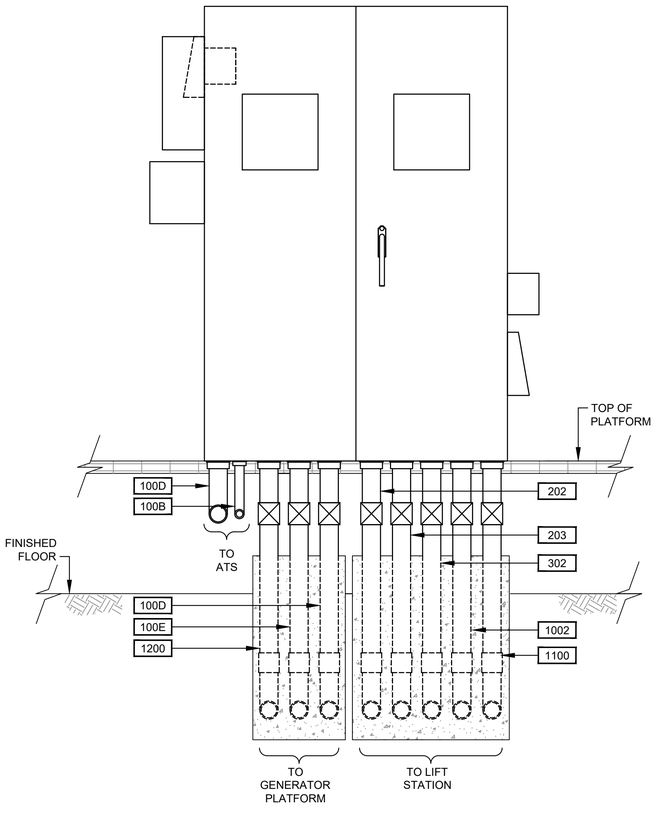

CONTROL PANEL ELEVATION

DETAIL 1 / NTS

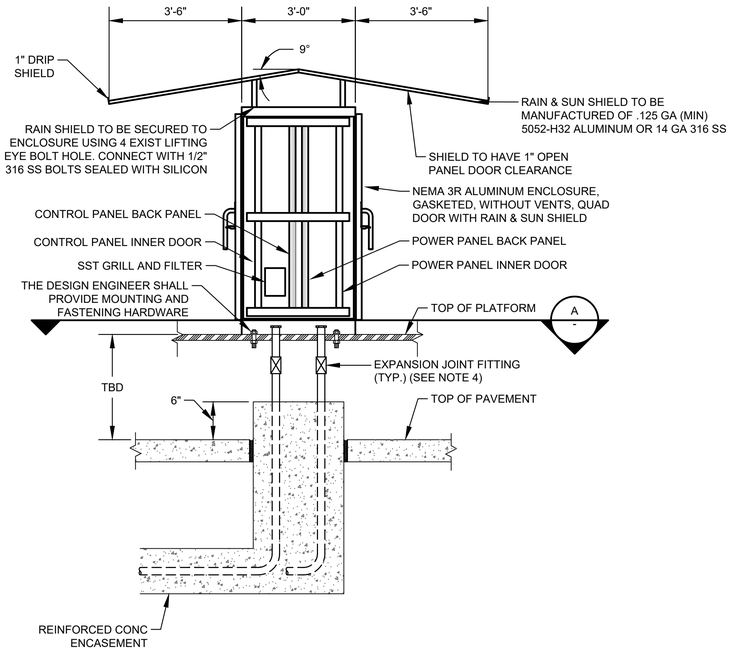

CONTROL CABINET ENCLOSURE WITH PLATFORM

(SEE NOTE 6)

DETAIL 2 / NTS

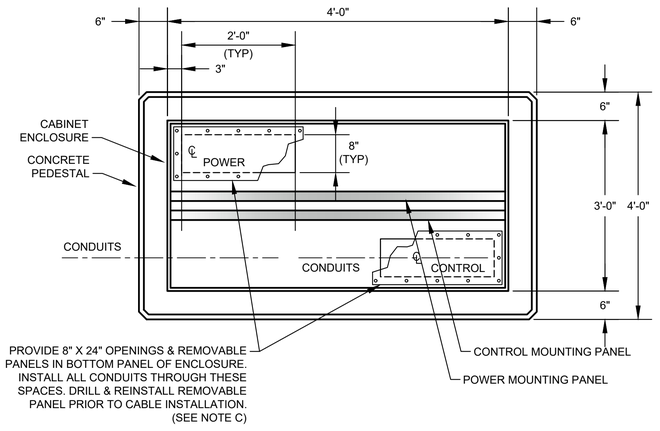

SECTION A / NTS

GENERAL NOTES:

1. REFER TO SPECIFICATION SECTION 13325 PROCESS CONTROL SYSTEMS CONTROL PANELS FOR PANEL DIMENSIONS.
2. COMMUNICATION PANEL TO BE INSTALLED ABOVE SERVICE RACK ELEVATION.
3. EXPANSION JOINT FITTINGS AS REQUIRED.
4. REFER TO SERVICE RACK FOR DETAIL.
5. POWER FACTOR CAPACITOR TO BE MOUNTED OUTSIDE SIDE WALL OF THE CONTROL CABINET.
6. REFER TO STRUCTURAL DRAWINGS FOR PLATFORM DETAIL.

NO.	DATE	REVISION	APP.
	MM/DD/YY	BRIEF DESCRIPTION	XXX
	MM/DD/YY	BRIEF DESCRIPTION	XXX
	MM/DD/YY	BRIEF DESCRIPTION	XXX

RPS A TETRA TECH COMPANY
Texas PE Firm Reg. #F-929
575 N. Dairy Ashford, Suite 700, Houston, Texas 77079
T +1 281 589 7257
E usinfrastructure@rpsgroup.com

SURVEYED BY:
FB NO. F-4578

FOR INTERIM REVIEW ONLY NOT INTENDED FOR PERMIT, BIDDING OR CONSTRUCTION PURPOSES.
ENGINEER:
HOSS FOROUZAN
P.E. SERIAL NO.77748
03/30/2026

CITY OF HOUSTON
HOUSTON PUBLIC WORKS

RECONSTRUCTION & REHABILITATION
COH LIFT STATIONS

BROOKDALE LIFT STATION CONTROL CABINET ENCLOSURE DETAIL

WBS NUMBER	FOR CITY OF HOUSTON USE ONLY
R-000267-00178-3	
DRAWING SCALE	
AS NOTED	
CITY OF HOUSTON PM	
TAHA LOTIA	
SHEET NO. 131 OF 268	

BR-E-7

FILE PATH: O:\H8109_Lift Station Rehabilitation And Reconstruction (Tetratech)\6 Drawings\Electrical\Working\Brookdale\Brookdale_E-07.dwg PLOT STYLE: GAI.ctb
PLOTTED: 3/26/2026 5:51 PM

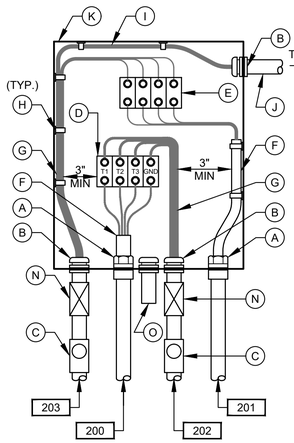

PUMP NO.1
JUNCTION BOX

DETAIL 2
NTS
(SEE NOTE 7)

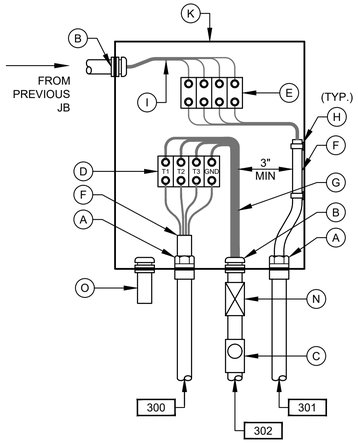

PUMP NO.2
JUNCTION BOX

DETAIL 3
NTS
(SEE NOTE 7)

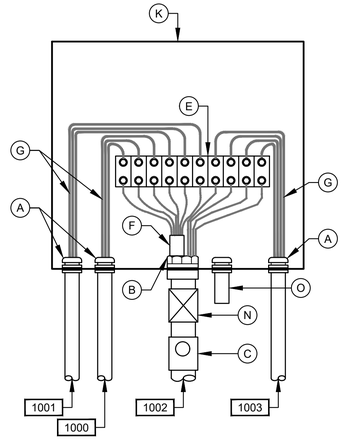

LEVEL TRANSMITTER
JUNCTION BOX

DETAIL 4
NTS
(SEE NOTE 7)

NOTES:

1. NAMEPLATES SHALL BE MOUNTED TO JUNCTION BOXES USING 316 STAINLESS STEEL HARDWARE.
2. MAINTAIN MINIMUM SEPARATION REQUIRED UNDER NEC ARTICLE 504, BETWEEN INTRINSICALLY SAFE CONTROL WIRING AND NON INTRINSICALLY SAFE MOTOR FEEDER WIRING.
3. UNLESS OTHERWISE NOTED, ALL EXTERIOR EXPOSED CONDUITS SHALL BE PVC COATED ALUMINUM.
4. UNLESS OTHERWISE NOTED, ALL NUTS, BOLTS, SCREWS WASHERS, ETC SHALL BE TYPE 316 STAINLESS STEEL.
5. ALL UNDERGROUND CONDUITS TO BE ENCASED IN REINFORCED CONCRETE DUCTBANK.
6. PROVIDE ANTI-CORROSIVE SPRAY ON ANY BARE METAL PARTS OR EXPOSED WIRE.
7. SEE WIRING SCHEMATICS FOR TERMINALS AND WIRE NUMBERS.
8. ANY CONDUIT REQUIRING A CSBE SEAL, SHALL BE A MINIMUM SIZE OF 2 1/2" PER CABLE.
9. DETAIL SHOWN MAY BE MODIFIED PER SITE SITUATION.
10. COORDINATE WITH WASTE WATER OPERATIONS ELECTRICAL ORGANIZATION FOR THE OPENING OF JUNCTION BOXES TO THE SIDE OF WET WELL IF REQUIRED DURING CONSTRUCTION.
11. THE ENCLOSURES WITH ELECTRICAL CIRCUITS SHALL BE A MINIMUM OF 5 FEET FROM ANY CLASSIFIED AREA, OTHERWISE EXPLOSION PROOF TYPE ENCLOSURES SHALL BE USED.
12. THE RECEPTACLES SHALL BE EXPLOSION PROOF TYPE IF INSTALLED WITHIN 5 FEET OF CLASSIFIED AREA, SHALL BE FIELD VERIFIED.

JUNCTION BOX EQUIPMENT SCHEDULE

- A - OZ GEDNEY CSBE SEAL
- B - WATERTIGHT CONDUIT HUB WITH INSULATED BUSHING
- C - CLASS I, DIV 1, EXPLOSION PROOF SEAL INSTALLED PER NEC DIV 501
- D - POWER TERMINAL BLOCK W/SCREW DOWN BOX LUGS
- E - CONTROL TERM BLOCK W/SCREW DOWN BOX LUGS
- F - MULTI-CONDUCTOR CABLE, REMOVE OUTER JACKET AS SHOWN
- G - WIRING AS SCHEDULED
- H - WIRING HARNESS PERMANENTLY AFFIXED
- I - PUMP CONTROL WIRING FROM PUMPS 2; 2 & 3; 4; OR D2, AS APPLICABLE
- J - 1 1/2" PVC COATED CONDUIT NIPPLE
- K - NEMA 4X STAINLESS STEEL JUNCTION BOX WITH GASKETED FRONT COVER, SINGLE QUARTER TURN, OIL-TIGHT LATCH AND PADLOCKING PROVISIONS, HOFFMAN D-3L16H1206 SS LF OR EQUAL. MINIMUM SIZE: 12"W X 16"H X 6"D
- L - NAMEPLATE, SEE SPECIFICATIONES (SEE NAMEPLATE SCHEDULE)
- M - MOTOR RATED SWITCH
- N - EXPANSION FITTING
- O - DRAIN VENT

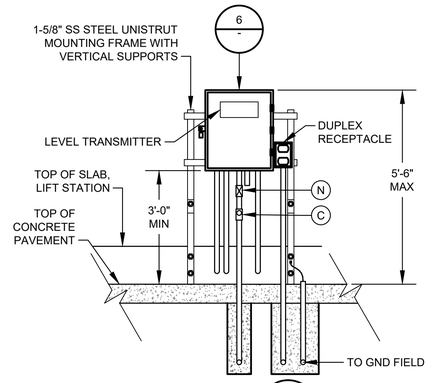

DETAIL 5
NTS

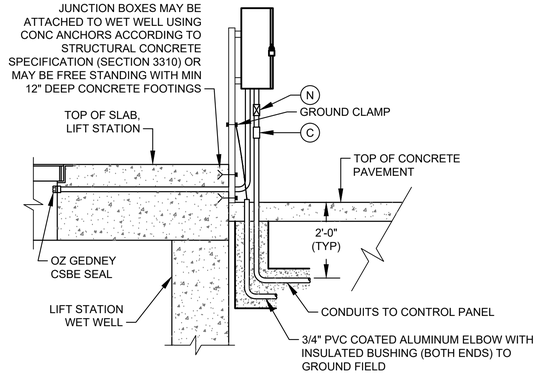

TYP SIDE VIEW FOR DETAIL 1

(SEE NOTE 10)

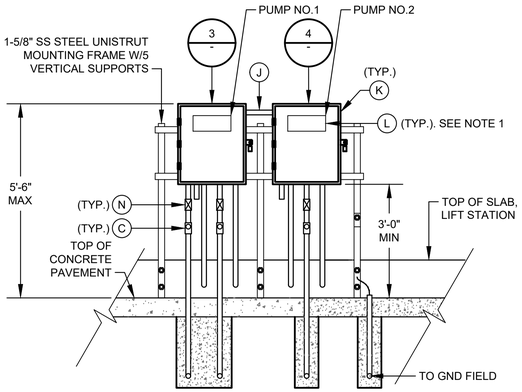

DETAIL 1
NTS
(SEE NOTE 9)

NO.	DATE	REVISION	APP.
	MM/DD/YY	BRIEF DESCRIPTION	XXX
	MM/DD/YY	BRIEF DESCRIPTION	XXX
	MM/DD/YY	BRIEF DESCRIPTION	XXX

Texas PE Firm Reg. #F-929
575 N. Dairy Ashford, Suite 700,
Houston, Texas 77079
T +1 281 589 7257
E usinfrastructure@rpsgroup.com

SURVEYED BY:
FB NO. F-4578

FOR INTERIM REVIEW ONLY NOT INTENDED FOR PERMIT, BIDDING OR CONSTRUCTION PURPOSES.
ENGINEER:
HOSS FOROUZAN
P.E. SERIAL NO.77748
03/30/2026

CITY OF HOUSTON
HOUSTON PUBLIC WORKS

RECONSTRUCTION & REHABILITATION
COH LIFT STATIONS

BROOKDALE LIFT STATION ELECTRICAL JUNCTION BOX DETAIL

WBS NUMBER	FOR CITY OF HOUSTON USE ONLY
R-000267-00178-3	
DRAWING SCALE	
AS NOTED	
CITY OF HOUSTON PM	
TAHA LOTIA	
SHEET NO. 132 OF 268	

BR-E-8

FILE PATH: O:\H8109_Lift Station Rehabilitation And Reconstruction (Tetratech)\6 Drawings\Electrical\Working\Brookdale\Brookdale_E-08.dwg PLOT STYLE: GAI.ctb
PLOTTED: 3/26/2026 5:51 PM

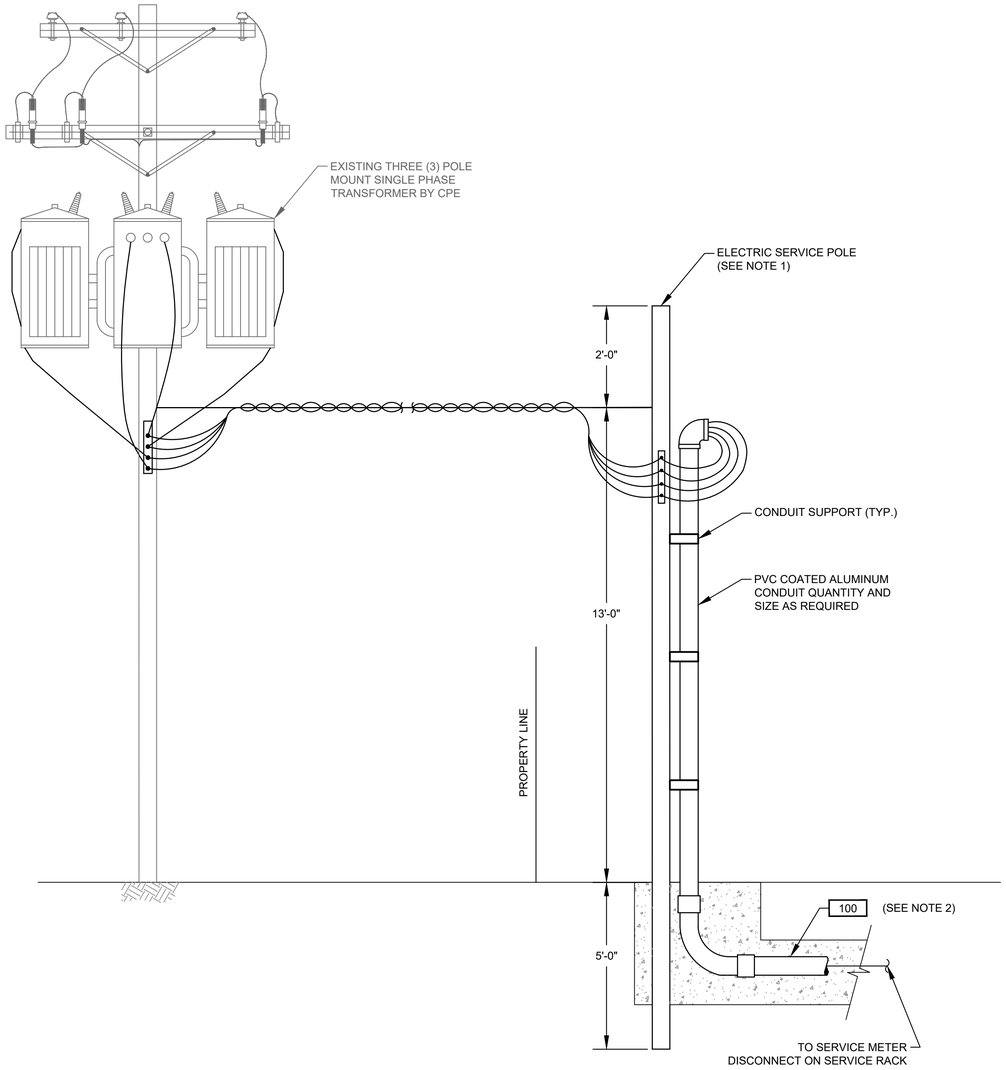

TYPICAL ELECTRICAL SERVICE ENTRANCE

FOR POWER SUPPLY BELOW 500KVA

DETAIL 1 / NTS. -

NOTES:

1. WOODEN POLE 20' LONG. TOP DIAMETER 6", BOTTOM DIAMETER 8" PROVIDED AND INSTALLED BY ELECTRICAL CONTRACTOR.
2. ELECTRICAL SERVICE FEEDER PROVIDED AND INSTALLED BY ELECTRICAL CONTRACTOR. COORDINATE WITH CPE FOR THE REQUIREMENTS OF THE INSTALLATION.

NO.	DATE	REVISION		APP.
	MM/DD/YY	BRIEF	DESCRIPTION	XXX
	MM/DD/YY	BRIEF	DESCRIPTION	XXX
	MM/DD/YY	BRIEF	DESCRIPTION	XXX

RPS A TETRA TECH COMPANY
Texas PE Firm Reg. #F-929
575 N. Dairy Ashford, Suite 700, Houston, Texas 77079
T +1 281 589 7257
E usinfrastructure@rpsgroup.com

FOR INTERIM REVIEW ONLY NOT INTENDED FOR PERMIT, BIDDING OR CONSTRUCTION PURPOSES.
ENGINEER:
HOSS FOROUZAN
P.E. SERIAL NO.77748
03/30/2026

SURVEYED BY:
FB NO. F-4578

CITY OF HOUSTON
HOUSTON PUBLIC WORKS

RECONSTRUCTION & REHABILITATION
COH LIFT STATIONS

BROOKDALE LIFT STATION ELECTRICAL SERVICE POLE DETAIL

WBS NUMBER	FOR CITY OF HOUSTON USE ONLY
R-000267-00178-3	
DRAWING SCALE	
AS NOTED	
CITY OF HOUSTON PM	
TAHA LOTIA	
SHEET NO. 133 OF 268	

BR-E-9

FILE PATH: O:\H8109_Lift Station Rehabilitation And Reconstruction (Tetratech)\6 Drawings\Electrical\Working\Brookdale\Brookdale_E-09.dwg PLOT STYLE: GAI.ctb PLOTTED: 3/26/2026 5:51 PM

	DESCRIPTION	SERVICE		ROUTING			CONDUIT & WIRE SIZE
		VOLTAGE	AMPS OR HP	FROM	TO	VIA	
A	MAIN BONDING JUMPER	--	--	MAIN FUSED DISCONNECT NEUTRAL	MAIN FUSED DISCONNECT GROUND	--	#1/0 CU GND.
B	EQUIPMENT BONDING JUMPER	--	--	MCC/POWER PANEL ENCLOSURE	POWER/CONTROL PANEL & EQUIPMENT	--	#1/0 CU GND.
C	GROUNDED ELECTRODE CONDUCTOR	--	--	GROUNDING ELECTRODE	MAIN SERVICE FUSED DISCONNECT GROUNDING	--	#1/0 CU GND.
100	SERVICE ENTRANCE	480V	400A	UTILITY POWER SERVICE	METER DISCONNECT		3#500MCM, 1/0 NEUT. #2 GND. 4"C.
100A	SERVICE POWER	480V	400A	SERVICE DISCONNECT SWITCH	ATS	--	3#500MCM, 1/0 NEUT. #2 GND. 4"C.
100B	EMERGENCY POWER	480V	400A	GENERATOR	ATS	--	3#500MCM, 1/0 NEUT. #2 GND. 4"C.
100C	ELECTRICAL POWER	480V	400A	ATS	MCC	--	3#500MCM, 1/0 NEUT. #2 GND. 4"C.
100D	GENERATOR AUX. POWER	120/240V	50A	GENERATOR	LIGHTING PANEL	--	3#4 AWG, #8 GND. 1-1/2"C.
100E	GENERATOR CONTROLS	24VDC	--	GENERATOR	ATS	--	6#14 AWG, #14 GND. 3/4"C.
100F	NORMAL/GENERATOR POWER STATUS	24VDC	--	ATS	CONTROL PANEL	--	4#14 AWG, #14 GND. 3/4"C.
100G	GENERATOR ALARM SIGNALS	24VDC	--	GENERATOR	CONTROL PANEL	--	16#14 AWG, #14 GND. 1"C.
101	GROUND ELECTRODE CONDUCTOR	--	--	CONTROL PANEL	GROUND FIELD	--	#1/0 CU GND.
105	COMMUNICATION	--	--	COMMUNICATION POLE	CONTROL PANEL	--	1-1/2"C. CAT 5E
200	PUMP NO. 1 POWER	480V	15 HP	PUMP NO.1	PUMP NO.1 JUNCTION BOX	--	MANUFACTURER'S CABLE IN 2-1/2" CONDUIT
201	PUMP NO. 1 CONTROLS	120V	--	PUMP NO.1	PUMP NO.1 JUNCTION BOX	--	MANUFACTURER'S CABLE IN 2-1/2" CONDUIT
202	PUMP NO. 1 POWER	480V	15 HP	PUMP NO. 1 JUNCTION BOX	PUMP STARTER	--	3#6 AWG, #10 GND. 1"C.
203	COMBINED PUMP CONTROLS	120V	--	PUMP NO.1 JUNCTION BOX	PUMP NO.1 JUNCTION BOX	COMBINED PUMP 1 & 2 CONTROLS	COMBINE 200 & 300 TAG WIRING, 8#14, 1"C.
300	PUMP NO. 2 POWER	480V	15 HP	PUMP NO.2	PUMP NO.2 JUNCTION BOX	--	MANUFACTURER'S CABLE IN 2-1/2" CONDUIT
301	PUMP NO. 2 CONTROLS	120V	--	PUMP NO.2	PUMP NO.2 JUNCTION BOX	--	MANUFACTURER'S CABLE IN 2-1/2" CONDUIT
302	PUMP NO. 2 POWER	480V	15 HP	PUMP NO. 2 JUNCTION BOX	PUMP STARTER	--	3#6 AWG, #10 GND. 1"C.
500	LIGHTING TRANSFORMER PRIMARY FEEDER	480V	70A	CONTROL PANEL	LIGHTING TRANSFORMER PRIMARY		2#4 AWG, #8 GND. 1"C.
501	LIGHTING PANEL GROUND	--	--	LIGHTING PANEL	GROUND FIELD	--	#8 GND., 1"C.
502	LIGHTING PANEL FEEDER	120/240V	--	LIGHTING TRANSFORMER	LIGHTING PANEL	--	3#1 AWG, #6 GND. 1-1/2"C.
900	INTRUSION ALARM	24VDC	--	MOTION SWITCH	CONTROL PANEL	--	2#14, 3/4"C.
1000	LEVEL TRANSMITTER	24VDC	--	TRANSMITTER JUNCTION BOX	TRANSMITTER JUNCTION BOX	--	MANUFACTURER'S CABLE IN 2-1/2" CONDUIT
1001	LEVEL TRANSMITTER	24VDC	--	TRANSMITTER JUNCTION BOX	TRANSMITTER JUNCTION BOX	--	MANUFACTURER'S CABLE IN 2-1/2" CONDUIT
1002	COMBINED LEVEL TRANSMITTERS & FLOAT SWITCH	24VDC	--	CONTROL PANEL	TRANSMITTER JUNCTION BOX	--	2-TRI, 4#14, 2"C.
1003	WELL FLOAT SWITCHES	24VDC	--	TRANSMITTER JUNCTION BOX	FLOAT SWITCH NO.1 & NO.2	--	MANUFACTURER'S CABLE IN 2-1/2" CONDUIT
1100	120VAC FOR RECEPTACLE	--	--	LIGHTING PANEL	RECEPTACLE NEXT TO TRANSMITTER J-BOX	--	2#12, #12G, 1"C.
1200	120VAC FOR RECEPTACLE	--	--	LIGHTING PANEL	RECEPTACLE ON GENERATOR PLATFORM	--	4#12, #12G, 1"C.
1300	SITE LIGHTING	120VAC	--	LIGHTING PANEL	LIGHT SWITCH	--	2#12, #12G, 1"C.
1300A	SITE LIGHTING	120VAC	--	LIGHTING SWITCH	SITE LIGHTS	--	2#12, #12G, 1"C.

NOTES BY SYMBOL "⟨#⟩":

⟨1⟩ REFER TO SPEC SECTION 16120 FOR CONDUCTOR COLOR CODE.

NO.	DATE	REVISION	APP.
	MM/DD/YY	BRIEF DESCRIPTION	XXX
	MM/DD/YY	BRIEF DESCRIPTION	XXX
	MM/DD/YY	BRIEF DESCRIPTION	XXX

RPS A TETRATECH COMPANY
Texas PE Firm Reg. #F-929
575 N. Dairy Ashford, Suite 700,
Houston, Texas 77079
T +1 281 589 7257
E usinfrastructure@rpsgroup.com

SURVEYED BY:
FB NO. F-4578

FOR INTERIM REVIEW ONLY NOT INTENDED FOR PERMIT, BIDDING OR CONSTRUCTION PURPOSES.
ENGINEER:
HOSS FOROUZAN
P.E. SERIAL NO.77748
03/30/2026

CITY OF HOUSTON
HOUSTON PUBLIC WORKS

RECONSTRUCTION & REHABILITATION
COH LIFT STATIONS

BROOKDALE LIFT STATION ELECTRICAL CONDUIT SCHEDULE

WBS NUMBER	FOR CITY OF HOUSTON USE ONLY
R-000267-00178-3	
DRAWING SCALE	
AS NOTED	
CITY OF HOUSTON PM	
TAHA LOTIA	
SHEET NO. 134 OF 268	

BR-E-10

PLOTTED: 3/26/2026 5:51 PM
FILE PATH: O:\H8109_Lift Station Rehabilitation And Reconstruction (Tetratech)\6 Drawings\Electrical\Working\Brookdale\Brookdale_E-10.dwg PLOT STYLE: GAI.ctb

PLOTTED: 3/26/2026 5:51 PM
FILE PATH: O:\H8109_Lift Station Rehabilitation And Reconstruction (Tetratech)\6 Drawings\Instrumentation And Control\Working\Brookdale\H8109_BR-I-1.dgn

HMI

INFLUENT PUMP NO. 1

SEAL FAIL ALARM	MOTOR OVERLOAD ALARM	MOTOR CURRENT	HIGH TEMP ALARM	IN HAND	IN AUTO	ON/OFF	START/ STOP
MA 1	MO 1	II 1	TH 1	HI 1	IA 1	YFS 1	YCS 1

INFLUENT PUMP NO. 2

SEAL FAIL ALARM	MOTOR OVERLOAD ALARM	MOTOR CURRENT	HIGH TEMP ALARM	IN HAND	IN AUTO	ON/OFF	START/ STOP
MA 2	MO 2	II 2	TH 2	HI 2	IA 2	YFS 2	YCS 2

PRIMARY PLC: ALARMS RESET RE 1; FLOAT HIGH-HIGH WETWELL LEVEL LAHH 1A

BACKUP PLC: PUMP NO. 1 START/ STOP YCS 1A; PUMP NO. 2 START/ STOP YCS 2A

CONTROL PANEL PLC

CONTROL PANEL

480V

INFLUENT PUMP NO. 1 — H/O/A, RUN

INFLUENT PUMP NO. 2 — H/O/A, RUN

PRIMARY PLC (G)

BACKUP PLC (G)

INFLUENT PUMP CONTROL PANEL

ALARMS RESET

OIT

TO SHEET BD-I2

BD-I2

BD-I2

WET WELL

LT 1

LE 1

LT 2

LE 2

LSH 1A

TSH 1A

M

FS2 HIGHHIGH LEVEL FLOAT SWITCH

LSH 2A

TSH 2A

M

INFLUENT DISCHARGE

FS1 HIGH LEVEL FLOAT SWITCH

NO.	DATE	REVISION	BRIEF DESCRIPTION	APP.
	MM/DD/YY		XXX	
	MM/DD/YY		XXX	
	MM/DD/YY		XXX	

RPS A TETRA TECH COMPANY
Texas PE Firm Reg. #F-929
575 N. Dairy Ashford, Suite 700, Houston, Texas 77079
T +1 281 589 7257
E usinfrastructure@rpsgroup.com

SURVEYED BY:
FB NO. F-4578

FOR INTERIM REVIEW ONLY NOT INTENDED FOR PERMIT, BIDDING OR CONSTRUCTION PURPOSES.
ENGINEER:
HOSS FOROUZAN
P.E. SERIAL NO.77748
03/30/2026

CITY OF HOUSTON
HOUSTON PUBLIC WORKS

RECONSTRUCTION & REHABILITATION
COH LIFT STATIONS

BROOKDALE LIFT STATION PROCESS & INSTRUMENTATION DIAGRAM–I

WBS NUMBER	FOR CITY OF HOUSTON USE ONLY
R–000267–00178–3	
DRAWING SCALE	
AS NOTED	
CITY OF HOUSTON PM	
TAHA LOTIA	
SHEET NO. 135 OF 268	

BR–I–1

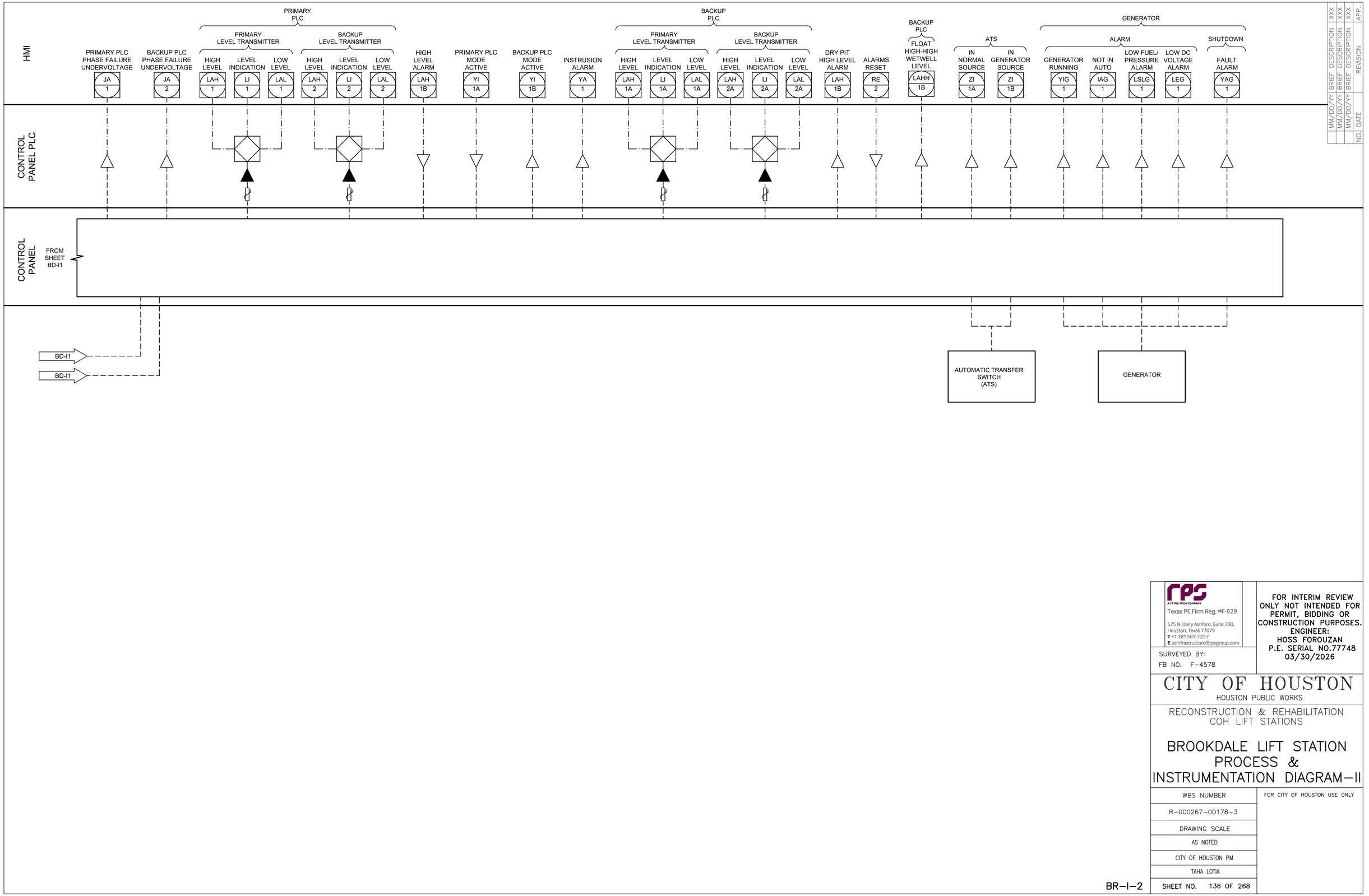

NO.	DATE	REVISION	APP.
	MM/DD/YY	BRIEF DESCRIPTION	XXX
	MM/DD/YY	BRIEF DESCRIPTION	XXX
	MM/DD/YY	BRIEF DESCRIPTION	XXX

RPS A TETRA TECH COMPANY
Texas PE Firm Reg. #F-929
575 N. Dairy Ashford, Suite 700,
Houston, Texas 77079
T +1 281 589 7257
E usinfrastructure@rpsgroup.com

SURVEYED BY:
FB NO. F-4578

FOR INTERIM REVIEW ONLY NOT INTENDED FOR PERMIT, BIDDING OR CONSTRUCTION PURPOSES.
ENGINEER:
HOSS FOROUZAN
P.E. SERIAL NO.77748
03/30/2026

CITY OF HOUSTON
HOUSTON PUBLIC WORKS

RECONSTRUCTION & REHABILITATION
COH LIFT STATIONS

BROOKDALE LIFT STATION PROCESS & INSTRUMENTATION DIAGRAM–II

WBS NUMBER	FOR CITY OF HOUSTON USE ONLY
R-000267-00178-3	
DRAWING SCALE	
AS NOTED	
CITY OF HOUSTON PM	
TAHA LOTIA	
SHEET NO. 136 OF 268	

BR–I–2

PLOTTED: 3/26/2026 5:51 PM

FILE PATH: O:\H8109_Lift Station Rehabilitation And Reconstruction (Tetratech)\6 Drawings\Instrumentation And Control\Working\Brookdale\H8109_BR-I-2.dwg

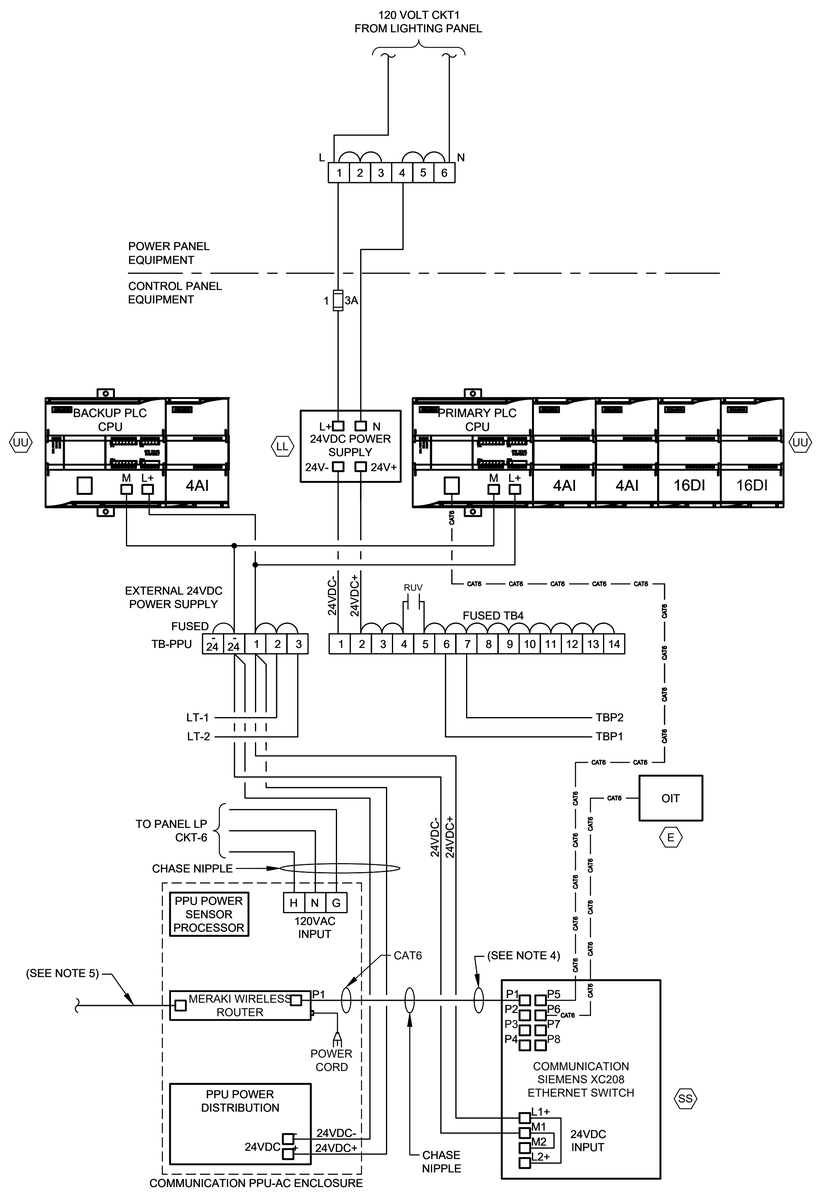

CONTROL POWER &
COMMUNICATIONS WIRING

DIAGRAM

NTS

(SEE NOTE 2 & 6)

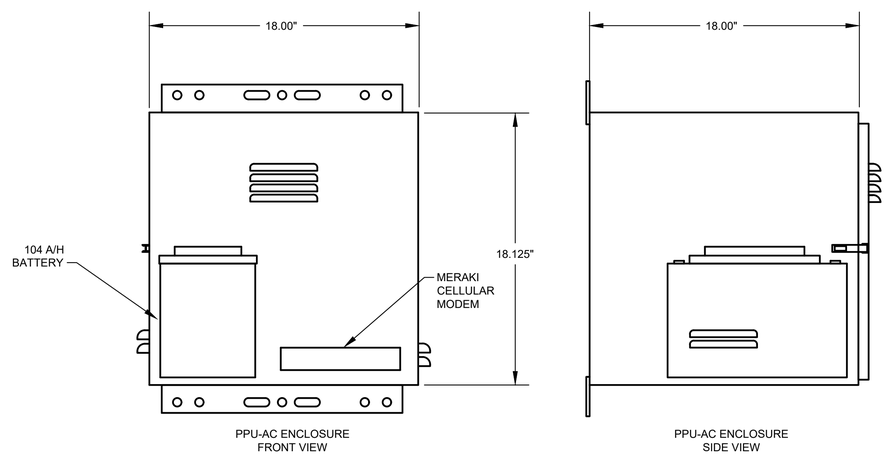

PPU-AC ENCLOSURE
FRONT VIEW

PPU-AC ENCLOSURE
SIDE VIEW

PPU-AC
CONTROL ENCLOSURE

ELEVATION

NTS

(SEE NOTE 7)

NOTES:

1. FOR DESCRIPTION AND RATINGS OF ITEMS INDICATED WITH ITEM TAG, SEE DEVICE RATINGS SCHEDULE.
2. REFER TO SPEC SECTION 16120 FOR CONDUCTOR COLOR CODE.
3. THE PLC POWER SUPPLY SHALL FEED THE 24VDC I/O.
4. ETHERNET CABLE FOR MERAKI CELLULAR ROUTER (P1).
5. CAT6 POE CABLE TO RADIO.
6. COMMUNICATION PPU-AC & SCADA SHALL BE PROVIDED BY CONTRACTOR INCLUDING TO RUN CONDUITS & WIRES.
7. COORDINATE WITH VENDOR TO PROVIDE PROPER VENTILATION WHERE APPLICABLE.

GENERAL NOTES:

1. NO ELECTRICAL MATERIAL, APPARATUS, DEVICES, APPLIANCES, FIXTURES, OR EQUIPMENT SHALL BE SOLD OR INSTALLED IN THE CITY UNLESS THEY ARE IN CONFORMANCE WITH THE PROVISIONS OF SECTION 508 CITY OF HOUSTON ELECTRICAL CODE, THE LAWS OF THE STATE OF TEXAS AND ANY APPLICABLE RULES AND REGULATIONS ISSUED UNDER THE AUTHORITY OF THE STATE STATUES. THE MAKER'S NAME, TRADEMARK, OR OTHER IDENTIFICATION SYMBOL SHALL BE PLACED ON ALL ELECTRICAL MATERIALS, APPARATUS, DEVICES, APPLIANCES, FIXTURES, AND EQUIPMENT USED OR INSTALLED UNDER THE PROVISIONS OF THIS CODE. ALL ELECTRICAL MATERIALS AND EQUIPMENT SHALL BE LISTED AND LABELED FOR THE INTENDED USE AND SHALL BE INCLUDED IN A LIST PUBLISHED BY AN APPROVAL AGENCY.

NO.	DATE	REVISION	APP.
	MM/DD/YY	BRIEF DESCRIPTION	XXX
	MM/DD/YY	BRIEF DESCRIPTION	XXX
	MM/DD/YY	BRIEF DESCRIPTION	XXX

RPS A TETRA TECH COMPANY
Texas PE Firm Reg. #F-929
575 N. Dairy Ashford, Suite 700,
Houston, Texas 77079
T +1 281 589 7257
E usinfrastructure@rpsgroup.com

SURVEYED BY:
FB NO. F-4578

FOR INTERIM REVIEW ONLY NOT INTENDED FOR PERMIT, BIDDING OR CONSTRUCTION PURPOSES.
ENGINEER:
HOSS FOROUZAN
P.E. SERIAL NO.77748
03/30/2026

CITY OF HOUSTON
HOUSTON PUBLIC WORKS

RECONSTRUCTION & REHABILITATION
COH LIFT STATIONS

BROOKDALE LIFT STATION COMMUNICATIONS DIAGRAM

WBS NUMBER	FOR CITY OF HOUSTON USE ONLY
R-000267-00178-3	
DRAWING SCALE	
AS NOTED	
CITY OF HOUSTON PM	
TAHA LOTIA	
SHEET NO. 137 OF 268	

BR-I-3

PLOTTED: 3/26/2026 5:51 PM
FILE PATH: O:\H8109_Lift Station Rehabilitation And Reconstruction (Tetratech)\6 Drawings\Instrumentation And Control\Working\Brookdale\H8109_BR-I-3.dgn

PLOTTED: 3/26/2026 5:51 PM
FILE PATH: O:\H8109_Lift Station Rehabilitation And Reconstruction (Tetratech)\6 Drawings\Instrumentation And Control\Working\Brookdale\H8109_BR-I-4.dgn

EQUIPMENT AND DEVICE SCHEDULE		
ITEM	QUANTITY	DESCRIPTION
A	1	PANEL BOARD, 120/240V, 1 PHASE, 3 WIRE, 100A, 12 CKTS
B	2	FULL VOLTAGE, NON-REVERSING, SINGLE SPEED, AUTOMATIC MOTOR STARTER W/120 VOLT CONTROL COIL, NEMA SIZE AS SCHEDULED.
C	2	TIME DELAY RELAY WITH THREE FORM C CONTACTS, 120VAC COIL AND 11 PIN SOCKET BASE.
D	1	SINGLE CHANNEL INTRINSICALLY SAFE RELAY
E	1	PROGRAMMING SCREEN (OIT)
F	2	HAND-OFF-AUTO SWITCH, 3 POSITION, HEAVY-DUTY, OILTIGHT WITH 2 SETS OF CONTACT BLOCKS (PUMP CONTROL)
G	2	INDICATING LIGHT, HEAVY DUTY, OILTIGHT, RED, 24 VDC, LED, WITH "RUN" LEGEND
H	1	PERPETUAL POWER UNIT (PPU)
I	1	PUMP ALARM RESET PUSHBUTTON
J	2	SWITCH FOR CABINET LIGHT, 120V, 20A, SPST
K	3	DUPLEX RECEPTACLE, 120V, 20A, 2 WIRE, GROUNDED
L	2	24" LED STRIP LIGHT 120V SUITABLE FOR ZERO DEGREE OPERATION.
M	1	SURGE PROTECTOR - INCOMING POWER
N	*	NOT USED.
P	2	CURRENT TRANSFORMER, RATIO AS SCHEDULED W/4-20mA OUTPUT.
Q	12	TERMINAL BLOCKS, SIZED FOR MOTOR POWER REQUIREMENTS
R	*	RELAY WITH THREE FORM C CONTACTS, AND 11 PIN SOCKET BASE
S	*	NOT USED.
T	*	NAMEPLATES, SEE SPECIFICATIONS (SEE NAMEPLATE SCHEDULE)
U	2	SOLID STATE MOTOR OVERLOAD RELAY
V	6	FUSE HOLDER & FUSES - PHASE FAILURE
W	1	NEMA 3R GASKETED ALUMINUM ENCLOSURE WITHOUT VENTS 72"H x 48"W x 36"D
X	1	DOOR MOUNTED ROTARY HANDLE DISCONNECT SWITCH (SUITABLE FOR ENVIRONMENT)
Y	1	THERMAL-MAGNETIC MOLDED CASE MAIN CIRCUIT BREAKER, SIZE AS SCHEDULED
Z	2	ADJUSTABLE INSTANTENOUS TRIP MOTOR CIRCUIT PROTECTOR, SIZE AS SCHEDULED
AA	*	TERMINAL BLOCKS
BB	2	EXTERNAL OVERLOAD RESET PUSHBUTTON MECHANISM
CC	2	ANALOG I/O SURGE SUPPRESSOR
DD	1	WIRE DUCT 2" WIDE x 2" DEEP MINIMUM
EE	1	THERMAL-MAGNETIC MODLED CASE CIRCUIT BREAKER FOR LIGHTING TRANSFORMER, SIZE AS SCHEDULED
FF	1	GROUND BUS
GG	1	25 KVA, 480 - 240/120V,1ϕ, 3W DRY TYPE NEMA 3R ENCLOSURE TRANSFORMER (PAD MOUNTED)
HH	*	NOT USED.
II	1	120VAC - 24VAC POWER SUPPLY (AS REQUIRED)
JJ	11	CARTRIDGE FUSES & FUSE HOLDER
KK	8	QUARTER TURN CAPTIVE DOOR CLOSURE
LL	1	120VAC - 24VDC PLC POWER SUPPLY 5A
MM	2	MOTION SWITCH
NN	*	NOT USED
PP	2	INDICATING LED LIGHT, HEAVY DUTY, OILTIGHT, GREEN, 24 VDC, LED WITH " PRIMARY PLC" & "BACKUP PLC" LEGEND
QQ	*	NOT USED
RR	*	NOT USED
SS	1	COMMUNICATION ETHERNET SWITCH
TT	1	POWER SURGE PROTECTOR - CONTROL POWER
UU	2	PROGRAMMABLE LOGIC CONTROLLER WITH EXPANSION UNIT
VV	1	PHASE AND UNDER VOLTAGE MONITOR
WW	*	FUSED TERMINAL BLOCKS
XX	2	PUMP PROTECTION MODULE RATED FOR CLASS I, DIVISION I
YY	2	ANALOG SIGNAL ISOLATOR
ZZ	-	NOT USED
AB	-	NOT USED.
AC	1	POWER DISTRIBUTION BLOCK
AD	1	NEUTRAL LUG
AE	1	6" EXHAUST FAN, 120V, STAINLESS FILTERS & GRILL PACKAGE W/BUG GUARD
AF	1	T-STAT FOR EXHAUST FAN

* - AS SCHEDULED

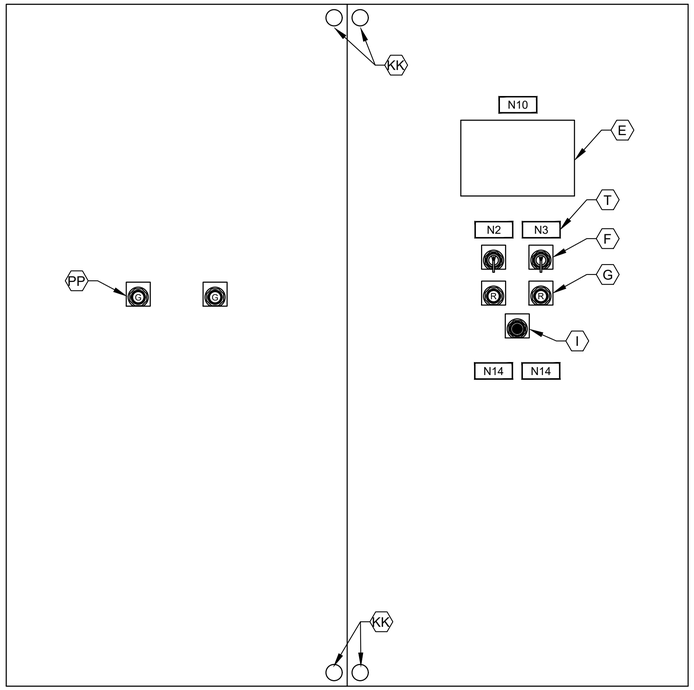

CONTROL PANEL FRONT INNER DOOR

ELEVATION

NTS

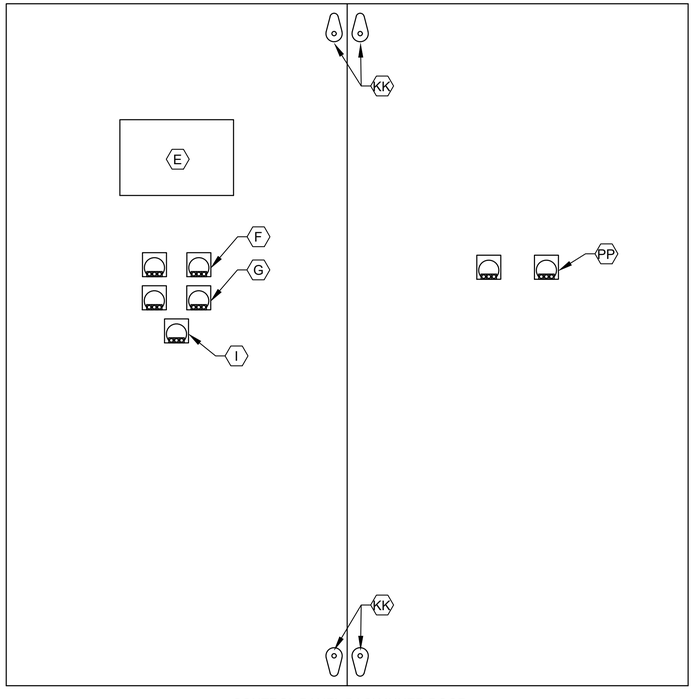

CONTROL PANEL BACK INNER DOOR

ELEVATION

NTS

NOTES:

1. NAMEPLATES SHALL BE MOUNTED TO PANELS USING STAINLESS STEEL HARDWARE.
2. REFER SPECIFICATIONS FOR ALL PANEL COMPONENTS.

GENERAL NOTES:

1. NO ELECTRICAL MATERIAL, APPARATUS, DEVICES, APPLIANCES, FIXTURES, OR EQUIPMENT SHALL BE SOLD OR INSTALLED IN THE CITY UNLESS THEY ARE IN CONFORMANCE WITH THE PROVISIONS OF SECTION 508 CITY OF HOUSTON ELECTRICAL CODE, THE LAWS OF THE STATE OF TEXAS AND ANY APPLICABLE RULES AND REGULATIONS ISSUED UNDER THE AUTHORITY OF THE STATE STATUES. THE MAKER'S NAME, TRADEMARK, OR OTHER IDENTIFICATION SYMBOL SHALL BE PLACED ON ALL ELECTRICAL MATERIALS, APPARATUS, DEVICES, APPLIANCES, FIXTURES, AND EQUIPMENT USED OR INSTALLED UNDER THE PROVISIONS OF THIS CODE. ALL ELECTRICAL MATERIALS AND EQUIPMENT SHALL BE LISTED AND LABELED FOR THE INTENDED USE AND SHALL BE INCLUDED IN A LIST PUBLISHED BY AN APPROVAL AGENCY.

NO.	DATE	REVISION	APP.
	MM/DD/YY	BRIEF DESCRIPTION	XXX
	MM/DD/YY	BRIEF DESCRIPTION	XXX
	MM/DD/YY	BRIEF DESCRIPTION	XXX

A TETRA TECH COMPANY
Texas PE Firm Reg. #F-929
575 N. Dairy Ashford, Suite 700,
Houston, Texas 77079
T +1 281 589 7257
E usinfrastructure@rpsgroup.com

SURVEYED BY:
FB NO. F-4578

FOR INTERIM REVIEW ONLY NOT INTENDED FOR PERMIT, BIDDING OR CONSTRUCTION PURPOSES.
ENGINEER:
HOSS FOROUZAN
P.E. SERIAL NO.77748
03/30/2026

CITY OF HOUSTON
HOUSTON PUBLIC WORKS

RECONSTRUCTION & REHABILITATION
COH LIFT STATIONS

BROOKDALE LIFT STATION CONTROL CABINET EQUIPMENT LAYOUT & SCHEDULE

WBS NUMBER	FOR CITY OF HOUSTON USE ONLY
R-000267-00178-3	
DRAWING SCALE	
AS NOTED	
CITY OF HOUSTON PM	
TAHA LOTIA	
SHEET NO. 138 OF 268	

BR-I-4

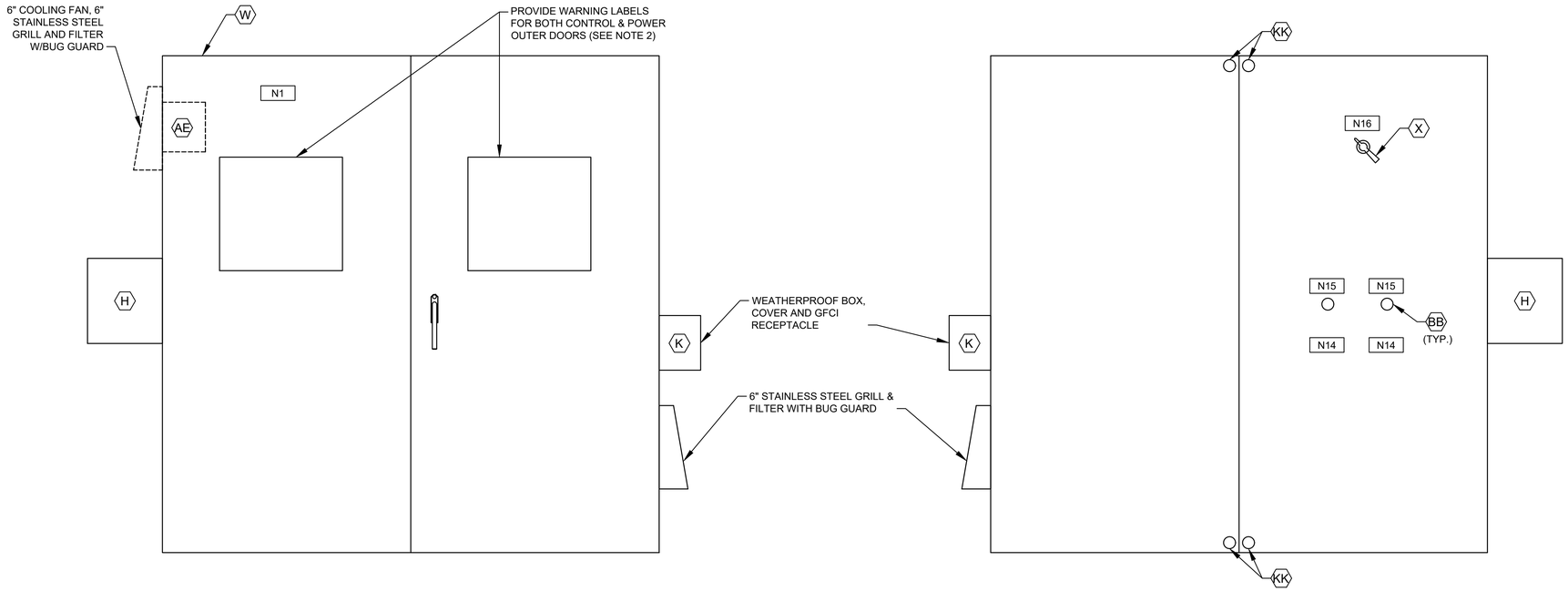

CONTROL CABINET (CONTROL SIDE)
OUTER DOOR

ELEVATION

NTS

CONTROL CABINET (POWER SIDE)
INNER DOOR

ELEVATION

NTS

(SEE NOTE 1)

NAMEPLATE SCHEDULE

DESIGNATION	ENGRAVED	DESIGNATION	ENGRAVED
N1	PUMP STATION DESIGNATION	N8	NOT USED.
N2	PUMP NO. 1	N9	NOT USED.
N3	PUMP NO. 2	N10	PROGRAMMING SCREEN
N4	NOT USED.	N11	NOT USED.
N5	NOT USED.	N12	PRIMARY PLC
N6	NOT USED.	N13	BACKUP PLC
N7	NOT USED.	N14	MOTOR DATA
			HORSEPOWER (OUTPUT) ----------
			RPM AT FULL LOAD ----------
			TIME RATING ----------
			FREQUENCY ----------
			NUMBER OF PHASES ----------
			MODEL NUMBER ----------
			RATED VOLTAGE ----------
			SERVICE FACTOR ----------
			FULL LOAD AMPS ----------
			INSULATION CLAS ----------
			NEMA DESIGN LETTER ----------
			TEMPERATURE RISE ----------
			NEMA FRAME SIZE ----------
			DATE OF MANUFACTURE ----------
			THERMO PROTECTION (IF REQUIRED) --
			MOISTURE PROTECTION (IF REQUIRED)-
		N15	EXTERNAL OVERLOAD RESET PUSH BUTTON MECHANISM
		N16	MAIN BREAKER

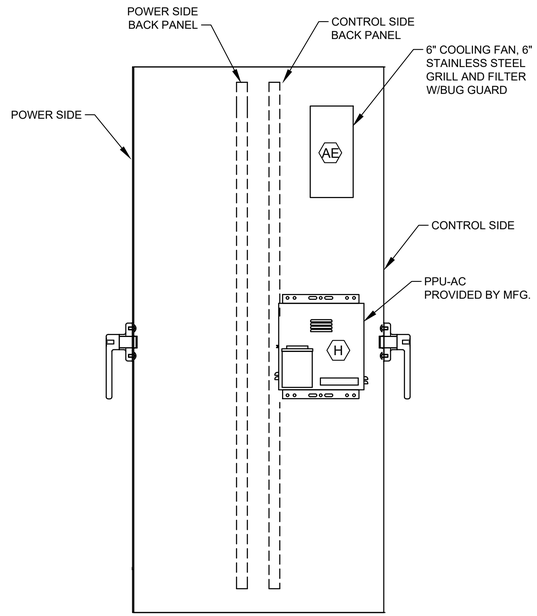

CONTROL CABINET (LEFT SIDE VIEW)

ELEVATION

NTS

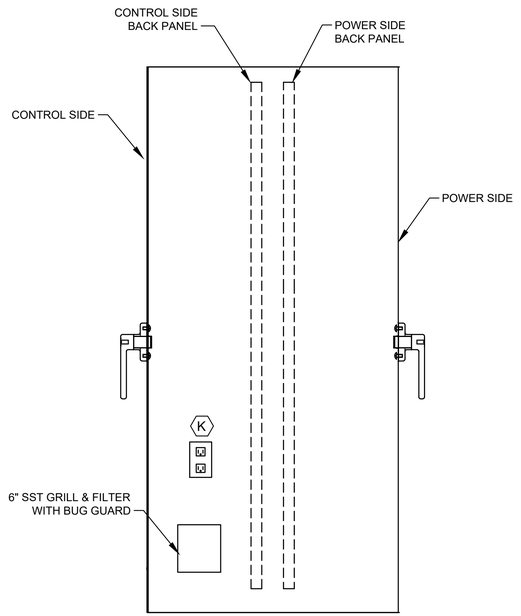

CONTROL CABINET (RIGHT SIDE VIEW)

ELEVATION

NTS

NOTES:

1. SEE SHEET BD-I4 FOR EQUIPMENT SCHEDULE.
2. REFER TO NEC SECTIONS 110.16 & 110.21

GENERAL NOTES:

1. NO ELECTRICAL MATERIAL, APPARATUS, DEVICES, APPLIANCES, FIXTURES, OR EQUIPMENT SHALL BE SOLD OR INSTALLED IN THE CITY UNLESS THEY ARE IN CONFORMANCE WITH THE PROVISIONS OF SECTION 508 CITY OF HOUSTON ELECTRICAL CODE, THE LAWS OF THE STATE OF TEXAS AND ANY APPLICABLE RULES AND REGULATIONS ISSUED UNDER THE AUTHORITY OF THE STATE STATUES. THE MAKER'S NAME, TRADEMARK, OR OTHER IDENTIFICATION SYMBOL SHALL BE PLACED ON ALL ELECTRICAL MATERIALS, APPARATUS, DEVICES, APPLIANCES, FIXTURES, AND EQUIPMENT USED OR INSTALLED UNDER THE PROVISIONS OF THIS CODE. ALL ELECTRICAL MATERIALS AND EQUIPMENT SHALL BE LISTED AND LABELED FOR THE INTENDED USE AND SHALL BE INCLUDED IN A LIST PUBLISHED BY AN APPROVAL AGENCY.

NO.	DATE	REVISION	APP.
	MM/DD/YY	BRIEF DESCRIPTION	XXX
	MM/DD/YY	BRIEF DESCRIPTION	XXX
	MM/DD/YY	BRIEF DESCRIPTION	XXX

RPS A TETRA TECH COMPANY
Texas PE Firm Reg. #F-929
575 N. Dairy Ashford, Suite 700,
Houston, Texas 77079
T +1 281 589 7257
E usinfrastructure@rpsgroup.com

SURVEYED BY:
FB NO. F-4578

FOR INTERIM REVIEW ONLY NOT INTENDED FOR PERMIT, BIDDING OR CONSTRUCTION PURPOSES.
ENGINEER:
HOSS FOROUZAN
P.E. SERIAL NO.77748
03/30/2026

CITY OF HOUSTON
HOUSTON PUBLIC WORKS

RECONSTRUCTION & REHABILITATION
COH LIFT STATIONS

BROOKDALE LIFT STATION CONTROL CABINET EQUIPMENT LAYOUT–I

WBS NUMBER	FOR CITY OF HOUSTON USE ONLY
R–000267–00178–3	
DRAWING SCALE	
AS NOTED	
CITY OF HOUSTON PM	
TAHA LOTIA	
SHEET NO. 139 OF 268	

BR–I–5

FILE PATH: O:\H8109_Lift Station Rehabilitation And Reconstruction (Tetratech)\6 Drawings\Instrumentation And Control\Working\Brookdale\H8109_BR-I-5.dwg tab
PLOTTED: 3/26/2026 5:51 PM

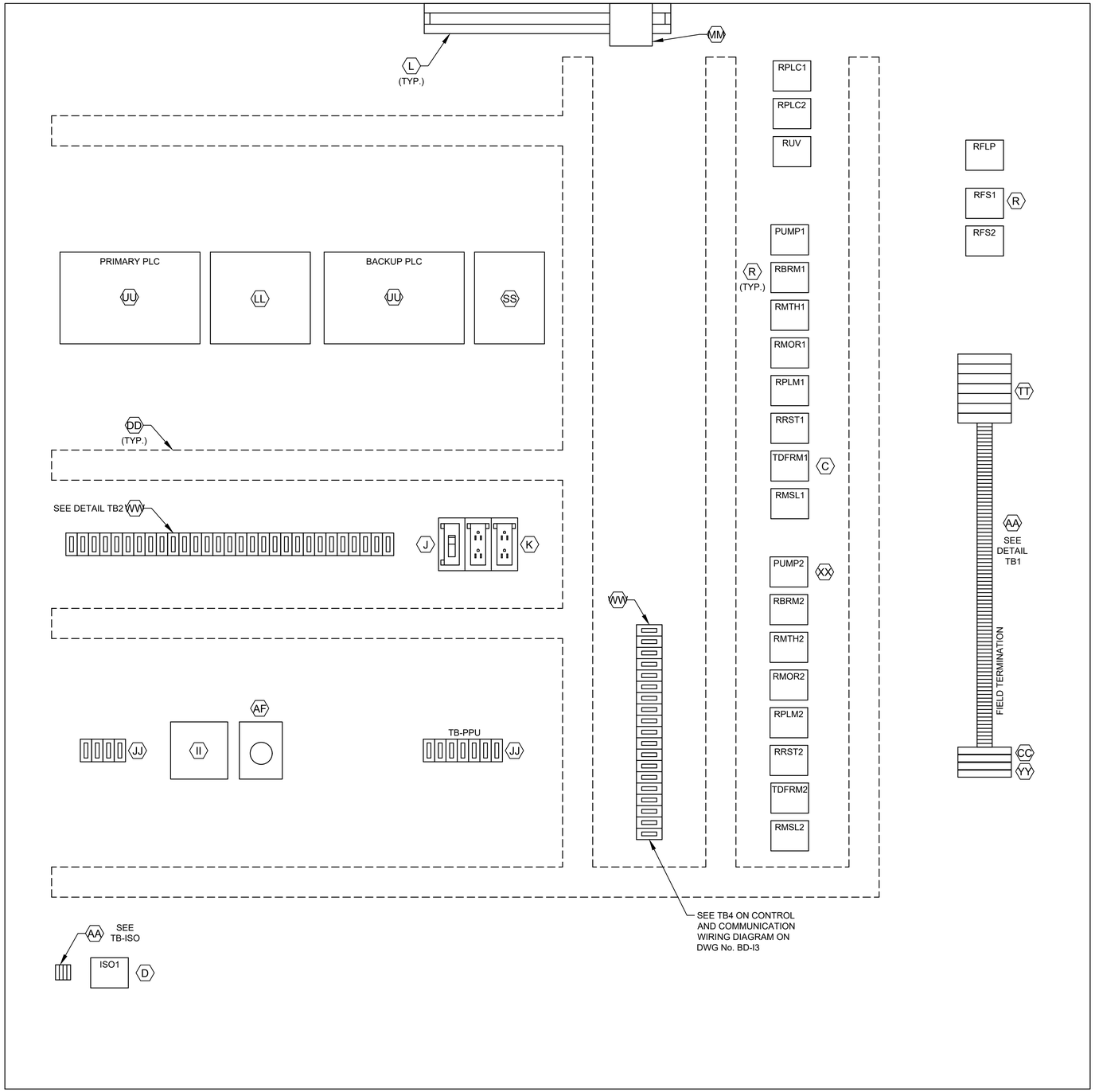

CONTROL PANEL
ELEVATION

DETAIL TB1
L1A
L1N
SPARE
3
3N
49
50
51
52
53
54
1004
1
24V-
24V-
1002
2
11
1001
1001A
12
1003
1003A
1002
1004
18
3N
19
20
36
36N
41
42
43
44
SPARE
L1A
L1N
103
104
105
106
107
108
110
113
115
116
119
SPARE
203
204
205
206
207
208
210
213
215
216
219

ALL L AND N FOR
EACH PUMP
CONTROL TO BE
FUSED

DETAIL TB2
36A
37A
50
52
54
52A
54A
L+
M
35B
38B
41B
47B
13B
13AB
13GB
L+
M
14B
14AB
14GB
L+
M
13
13A
13G
14
14A
14G
SPARE
18
SPARE
28
29
32
35B
33
42
44
SPARE
103
104
115
109
110
118
120
121
122
123
SPARE
209
210
211
218
220
222
223

DETAIL TB-ISO
1500
1501
1503
1504

LEGEND	
TAG	DESCRIPTION
RMTH	MOTOR HIGH TEMPERATURE ALARM RELAY
RPLM	PLC PUMP RUN RELAY
RRST	PUMP RESET AUX RELAY
RPLC	PLC MODE AUX RELAY
RMOR	MOTOR OVERLOAD ALARM RELAY
RBRM	BACKUP SYSTEM RUN RELAY
RUV	UNDER VOLTAGE RELAY
ISO	INTRINSICALLY SAFE RELAY
RFS	PUMP RUN FLOAT SWITCH RELAY
TDFRM	TIMER FLOAT SWITCH RUN RELAY
RMSL	MOTOR SEAL LEAK ALARM RELAY
RFLP	FLOAT LOCKOUT PUMP RELAY

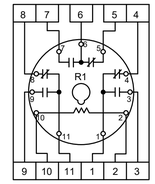

RELAY DETAIL
ITEM R

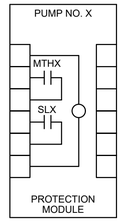

PUMP PROTECTION MODULE
DETAIL, ITEM XX

NOTE: REPLACE "X" WITH
APPROPRIATE PUMP NO.

NOTES:

1. SEE SHEET BD-I4 FOR EQUIPMENT SCHEDULE.

GENERAL NOTES:

1. NO ELECTRICAL MATERIAL, APPARATUS, DEVICES, APPLIANCES, FIXTURES, OR EQUIPMENT SHALL BE SOLD OR INSTALLED IN THE CITY UNLESS THEY ARE IN CONFORMANCE WITH THE PROVISIONS OF SECTION 508 CITY OF HOUSTON ELECTRICAL CODE, THE LAWS OF THE STATE OF TEXAS AND ANY APPLICABLE RULES AND REGULATIONS ISSUED UNDER THE AUTHORITY OF THE STATE STATUES. THE MAKER'S NAME, TRADEMARK, OR OTHER IDENTIFICATION SYMBOL SHALL BE PLACED ON ALL ELECTRICAL MATERIALS, APPARATUS, DEVICES, APPLIANCES, FIXTURES, AND EQUIPMENT USED OR INSTALLED UNDER THE PROVISIONS OF THIS CODE. ALL ELECTRICAL MATERIALS AND EQUIPMENT SHALL BE LISTED AND LABELED FOR THE INTENDED USE AND SHALL BE INCLUDED IN A LIST PUBLISHED BY AN APPROVAL AGENCY.

NOTES:

1. SEE SHEET I-095-603 FOR EQUIPMENT SCHEDULE.

NO.	DATE	REVISION	APP.
	MM/DD/YY	BRIEF DESCRIPTION	XXX
	MM/DD/YY	BRIEF DESCRIPTION	XXX
	MM/DD/YY	BRIEF DESCRIPTION	XXX

RPS
A TETRA TECH COMPANY
Texas PE Firm Reg. #F-929
575 N. Dairy Ashford, Suite 700,
Houston, Texas 77079
T +1 281 589 7257
E usinfrastructure@rpsgroup.com

SURVEYED BY:
FB NO. F-4578

FOR INTERIM REVIEW
ONLY NOT INTENDED FOR
PERMIT, BIDDING OR
CONSTRUCTION PURPOSES.
ENGINEER:
HOSS FOROUZAN
P.E. SERIAL NO.77748
03/30/2026

CITY OF HOUSTON
HOUSTON PUBLIC WORKS

RECONSTRUCTION & REHABILITATION
COH LIFT STATIONS

BROOKDALE LIFT STATION CONTROL CABINET EQUIPMENT LAYOUT–II

WBS NUMBER	FOR CITY OF HOUSTON USE ONLY
R-000267-00178-3	
DRAWING SCALE	
AS NOTED	
CITY OF HOUSTON PM	
TAHA LOTIA	
SHEET NO. 140 OF 268	

BR–I–6

FILE PATH: O:\H8109_Lift Station Rehabilitation And Reconstruction (Tetratech)\6 Drawings\Instrumentation And Control\Working\Brookdale\H8109_BR-I-6.dgn tb
PLOTTED: 3/26/2026 5:51 PM

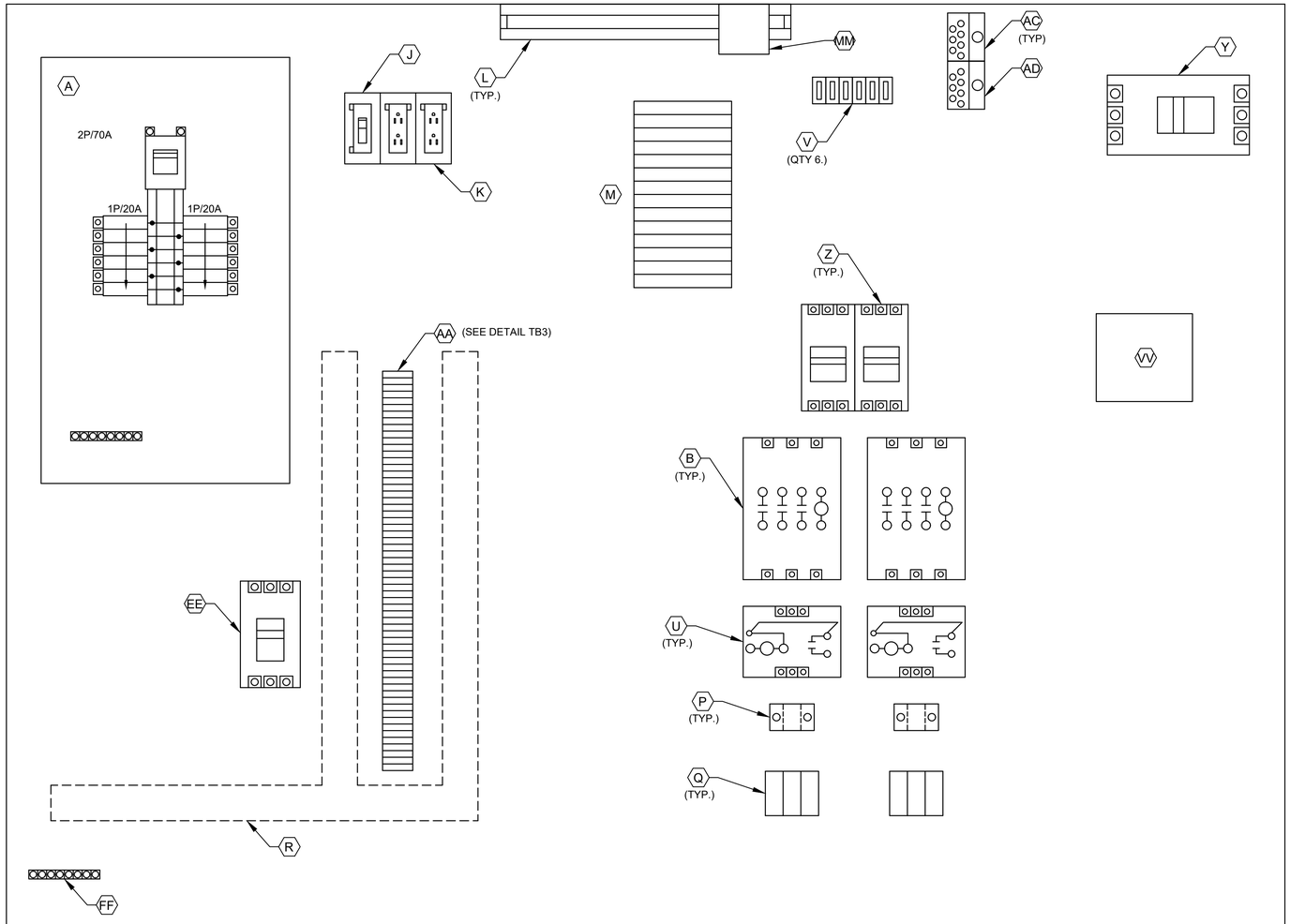

POWER PANEL
ELEVATION

3
18
L1A
L1N
SPARE
SPARE
103
104
105
106
107
108
110
113
115
116
119
SPARE
203
204
205
206
207
208
210
213
215
216
219
SPARE
SPARE
SPARE
SPARE
SPARE
SPARE
SPARE
SPARE
SPARE
SPARE

DETAIL TB3

NOTES:

1. SEE SHEET BD-I4 FOR EQUIPMENT SCHEDULE.

GENERAL NOTES:

1. NO ELECTRICAL MATERIAL, APPARATUS, DEVICES, APPLIANCES, FIXTURES, OR EQUIPMENT SHALL BE SOLD OR INSTALLED IN THE CITY UNLESS THEY ARE IN CONFORMANCE WITH THE PROVISIONS OF SECTION 508 CITY OF HOUSTON ELECTRICAL CODE, THE LAWS OF THE STATE OF TEXAS AND ANY APPLICABLE RULES AND REGULATIONS ISSUED UNDER THE AUTHORITY OF THE STATE STATUES. THE MAKER'S NAME, TRADEMARK, OR OTHER IDENTIFICATION SYMBOL SHALL BE PLACED ON ALL ELECTRICAL MATERIALS, APPARATUS, DEVICES, APPLIANCES, FIXTURES, AND EQUIPMENT USED OR INSTALLED UNDER THE PROVISIONS OF THIS CODE. ALL ELECTRICAL MATERIALS AND EQUIPMENT SHALL BE LISTED AND LABELED FOR THE INTENDED USE AND SHALL BE INCLUDED IN A LIST PUBLISHED BY AN APPROVAL AGENCY.

NO.	DATE	REVISION	APP.
	MM/DD/YY	BRIEF DESCRIPTION	XXX
	MM/DD/YY	BRIEF DESCRIPTION	XXX
	MM/DD/YY	BRIEF DESCRIPTION	XXX

RPS
A TETRA TECH COMPANY
Texas PE Firm Reg. #F-929
575 N. Dairy Ashford, Suite 700,
Houston, Texas 77079
T +1 281 589 7257
E usinfrastructure@rpsgroup.com

SURVEYED BY:
FB NO. F-4578

FOR INTERIM REVIEW ONLY NOT INTENDED FOR PERMIT, BIDDING OR CONSTRUCTION PURPOSES.
ENGINEER:
HOSS FOROUZAN
P.E. SERIAL NO.77748
03/30/2026

CITY OF HOUSTON
HOUSTON PUBLIC WORKS

RECONSTRUCTION & REHABILITATION
COH LIFT STATIONS

BROOKDALE LIFT STATION CONTROL CABINET EQUIPMENT LAYOUT–III

WBS NUMBER	FOR CITY OF HOUSTON USE ONLY
R-000267-00178-3	
DRAWING SCALE	
AS NOTED	
CITY OF HOUSTON PM	
TAHA LOTIA	
SHEET NO. 141 OF 268	

BR–I–7

FILE PATH: O:\H8109_Lift Station Rehabilitation And Reconstruction (Tetratech)\6 Drawings\Instrumentation And Control\Working\Brookdale\H8109_BR-I-7.dwg tb
PLOTTED: 3/26/2026 5:51 PM

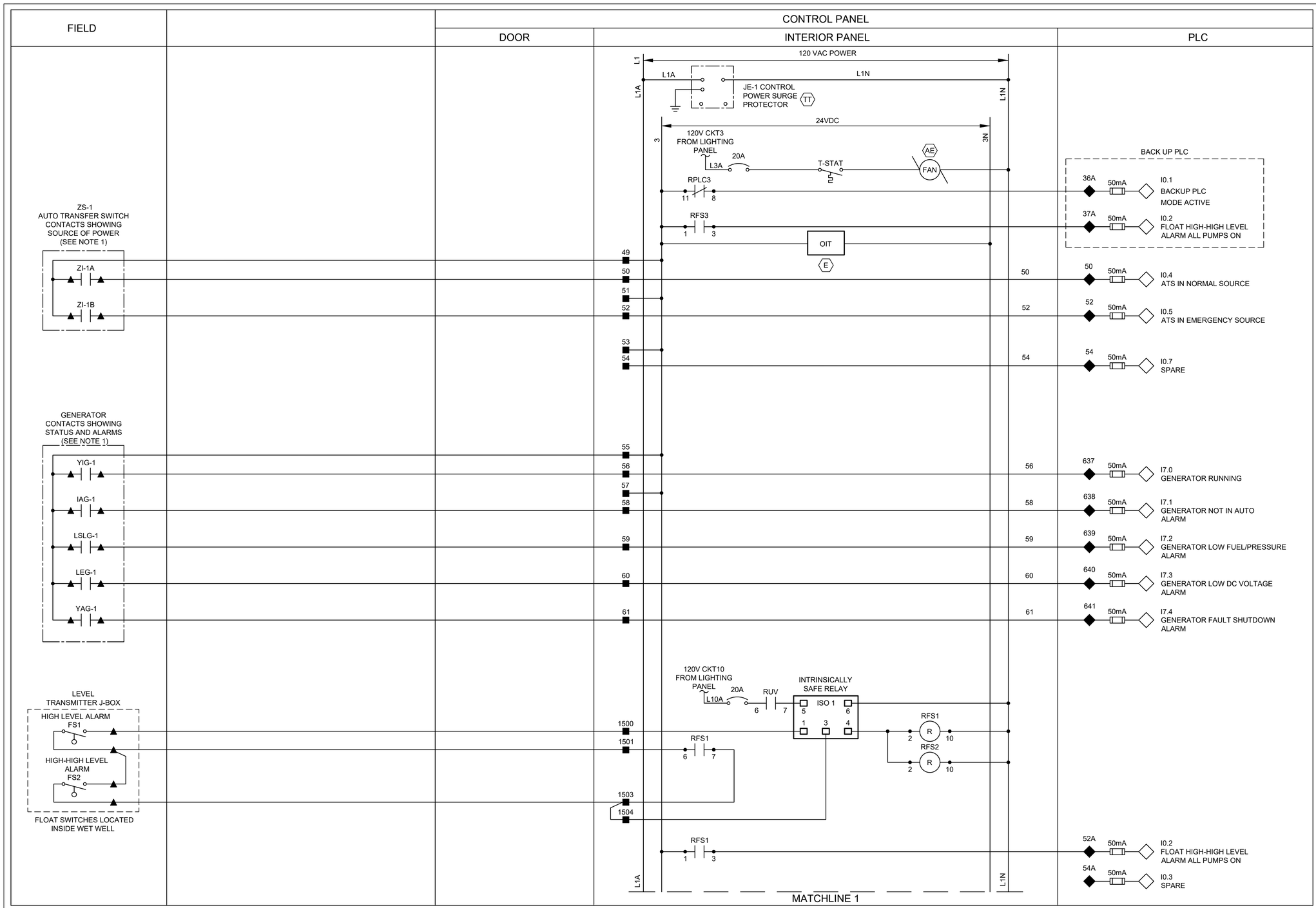

NOTES:

1. PROVIDE AUTO TRANSFER SWITCH DRY CONTACT.
2. ALL FLOAT CONTROL CIRCUIT WIRES COLOR SHALL BE YELLOW.

GENERAL NOTES:

1. NO ELECTRICAL MATERIAL, APPARATUS, DEVICES, APPLIANCES, FIXTURES, OR EQUIPMENT SHALL BE SOLD OR INSTALLED IN THE CITY UNLESS THEY ARE IN CONFORMANCE WITH THE PROVISIONS OF SECTION 508 CITY OF HOUSTON ELECTRICAL CODE, THE LAWS OF THE STATE OF TEXAS AND ANY APPLICABLE RULES AND REGULATIONS ISSUED UNDER THE AUTHORITY OF THE STATE STATUES. THE MAKER'S NAME, TRADEMARK, OR OTHER IDENTIFICATION SYMBOL SHALL BE PLACED ON ALL ELECTRICAL MATERIALS, APPARATUS, DEVICES, APPLIANCES, FIXTURES, AND EQUIPMENT USED OR INSTALLED UNDER THE PROVISIONS OF THIS CODE. ALL ELECTRICAL MATERIALS AND EQUIPMENT SHALL BE LISTED AND LABELED FOR THE INTENDED USE AND SHALL BE INCLUDED IN A LIST PUBLISHED BY AN APPROVAL AGENCY.

LEGEND

- △ DEVICE OR FIELD TERMINAL LOCATED AT MOTOR
- ✳ DEVICE OR FIELD TERMINAL LOCATED REMOTE
- □ DEVICE OR FIELD TERMINAL LOCATED AT MCC/POWER PANEL
- ■ FIELD TERMINAL LOCATED AT CONTROL PANEL
- ▲ REMOTE TERMINAL
- ● DEVICE TERMINAL NO.
- ◆ PLC INTERFACE TERMINAL

NO.	DATE	REVISION	APP.
	MM/DD/YY	BRIEF DESCRIPTION	XXX
	MM/DD/YY	BRIEF DESCRIPTION	XXX
	MM/DD/YY	BRIEF DESCRIPTION	XXX

RPS
A TETRA TECH COMPANY
Texas PE Firm Reg. #F-929
575 N. Dairy Ashford, Suite 700,
Houston, Texas 77079
T +1 281 589 7257
E usinfrastructure@rpsgroup.com

SURVEYED BY:
FB NO. F-4578

FOR INTERIM REVIEW ONLY NOT INTENDED FOR PERMIT, BIDDING OR CONSTRUCTION PURPOSES.
ENGINEER:
HOSS FOROUZAN
P.E. SERIAL NO.77748
03/30/2026

CITY OF HOUSTON
HOUSTON PUBLIC WORKS

RECONSTRUCTION & REHABILITATION
COH LIFT STATIONS

BROOKDALE LIFT STATION CONTROL PANEL CONTROL WIRING DIAGRAM–I

WBS NUMBER	FOR CITY OF HOUSTON USE ONLY
R-000267-00178-3	
DRAWING SCALE	
AS NOTED	
CITY OF HOUSTON PM	
TAHA LOTIA	
SHEET NO. 142 OF 268	

BR–I–8

PLOTTED: 3/26/2026 5:51 PM

FILE PATH: O:\H8109_Lift Station Rehabilitation And Reconstruction (Tetratech)\6 Drawings\Instrumentation And Control\Working\Brookdale\H8109_BR-I-8.dgn

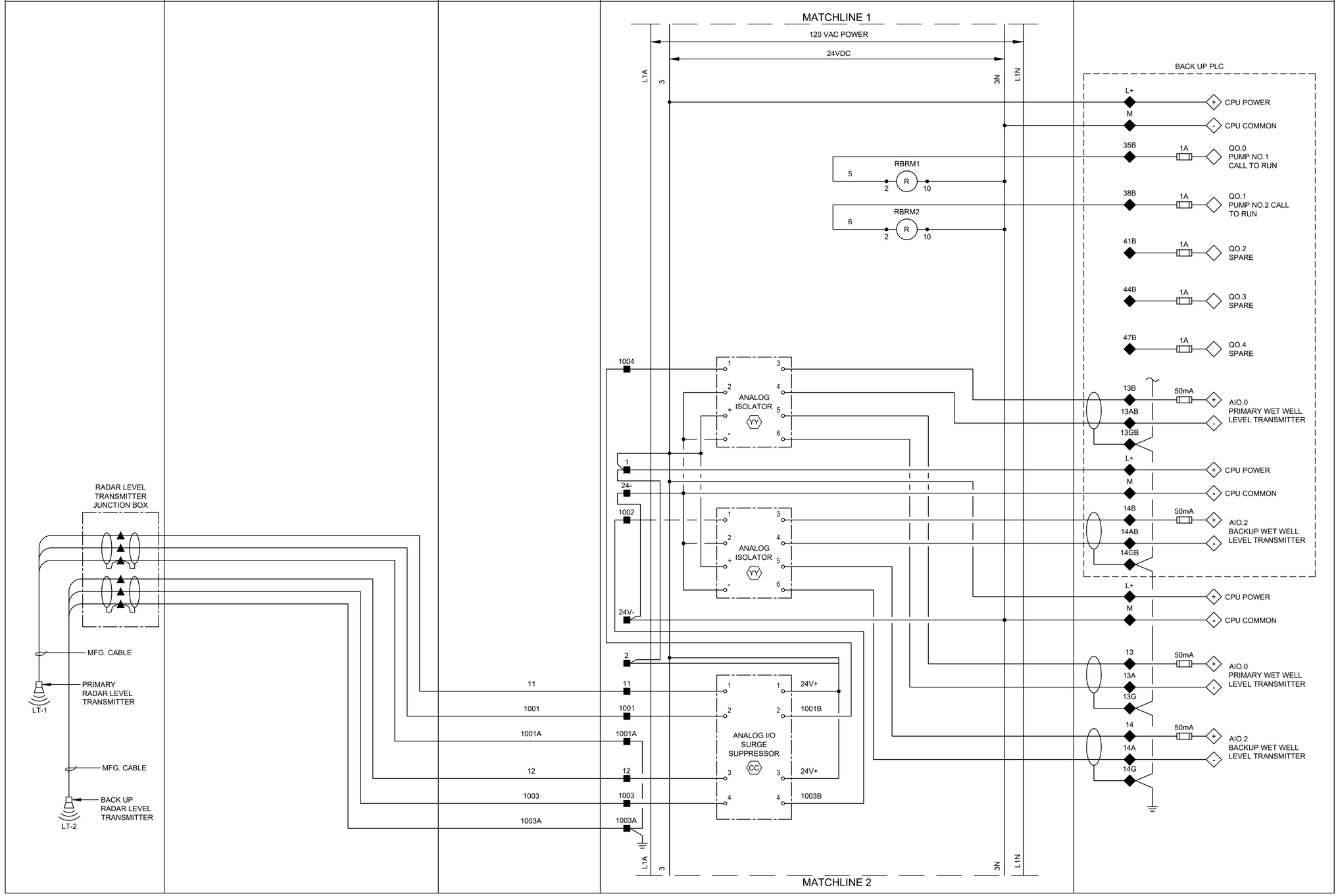

LEGEND

- △ DEVICE OR FIELD TERMINAL LOCATED AT MOTOR
- ✳ DEVICE OR FIELD TERMINAL LOCATED REMOTE
- □ DEVICE OR FIELD TERMINAL LOCATED AT MCC/POWER PANEL
- ■ FIELD TERMINAL LOCATED AT CONTROL PANEL
- ▲ REMOTE TERMINAL
- ● DEVICE TERMINAL NO.
- ◆ PLC INTERFACE TERMINAL

GENERAL NOTES:

1. NO ELECTRICAL MATERIAL, APPARATUS, DEVICES, APPLIANCES, FIXTURES, OR EQUIPMENT SHALL BE SOLD OR INSTALLED IN THE CITY UNLESS THEY ARE IN CONFORMANCE WITH THE PROVISIONS OF SECTION 508 CITY OF HOUSTON ELECTRICAL CODE, THE LAWS OF THE STATE OF TEXAS AND ANY APPLICABLE RULES AND REGULATIONS ISSUED UNDER THE AUTHORITY OF THE STATE STATUES. THE MAKER'S NAME, TRADEMARK, OR OTHER IDENTIFICATION SYMBOL SHALL BE PLACED ON ALL ELECTRICAL MATERIALS, APPARATUS, DEVICES, APPLIANCES, FIXTURES, AND EQUIPMENT USED OR INSTALLED UNDER THE PROVISIONS OF THIS CODE. ALL ELECTRICAL MATERIALS AND EQUIPMENT SHALL BE LISTED AND LABELED FOR THE INTENDED USE AND SHALL BE INCLUDED IN A LIST PUBLISHED BY AN APPROVAL AGENCY.

NO.	DATE	REVISION	APP.
	MM/DD/YY	BRIEF DESCRIPTION	XXX
	MM/DD/YY	BRIEF DESCRIPTION	XXX
	MM/DD/YY	BRIEF DESCRIPTION	XXX

rps
A TETRA TECH COMPANY
Texas PE Firm Reg. #F-929
575 N. Dairy Ashford, Suite 700,
Houston, Texas 77079
T +1 281 589 7257
E usinfrastructure@rpsgroup.com

FOR INTERIM REVIEW ONLY NOT INTENDED FOR PERMIT, BIDDING OR CONSTRUCTION PURPOSES.
ENGINEER:
HOSS FOROUZAN
P.E. SERIAL NO.77748
03/30/2026

SURVEYED BY:
FB NO. F-4578

CITY OF HOUSTON
HOUSTON PUBLIC WORKS

RECONSTRUCTION & REHABILITATION
COH LIFT STATIONS

BROOKDALE LIFT STATION CONTROL PANEL CONTROL WIRING DIAGRAM–II

WBS NUMBER	FOR CITY OF HOUSTON USE ONLY
R–000267–00178–3	
DRAWING SCALE	
AS NOTED	
CITY OF HOUSTON PM	
TAHA LOTIA	
SHEET NO. 143 OF 268	

BR–I–9

FILE PATH: O:\H8109_Lift Station Rehabilitation And Reconstruction (Tetratech)\6 Drawings\Instrumentation And Control\Working\Brookdale\H8109_LIFT STATION.dwg PLOTTED: 3/26/2026 5:51 PM

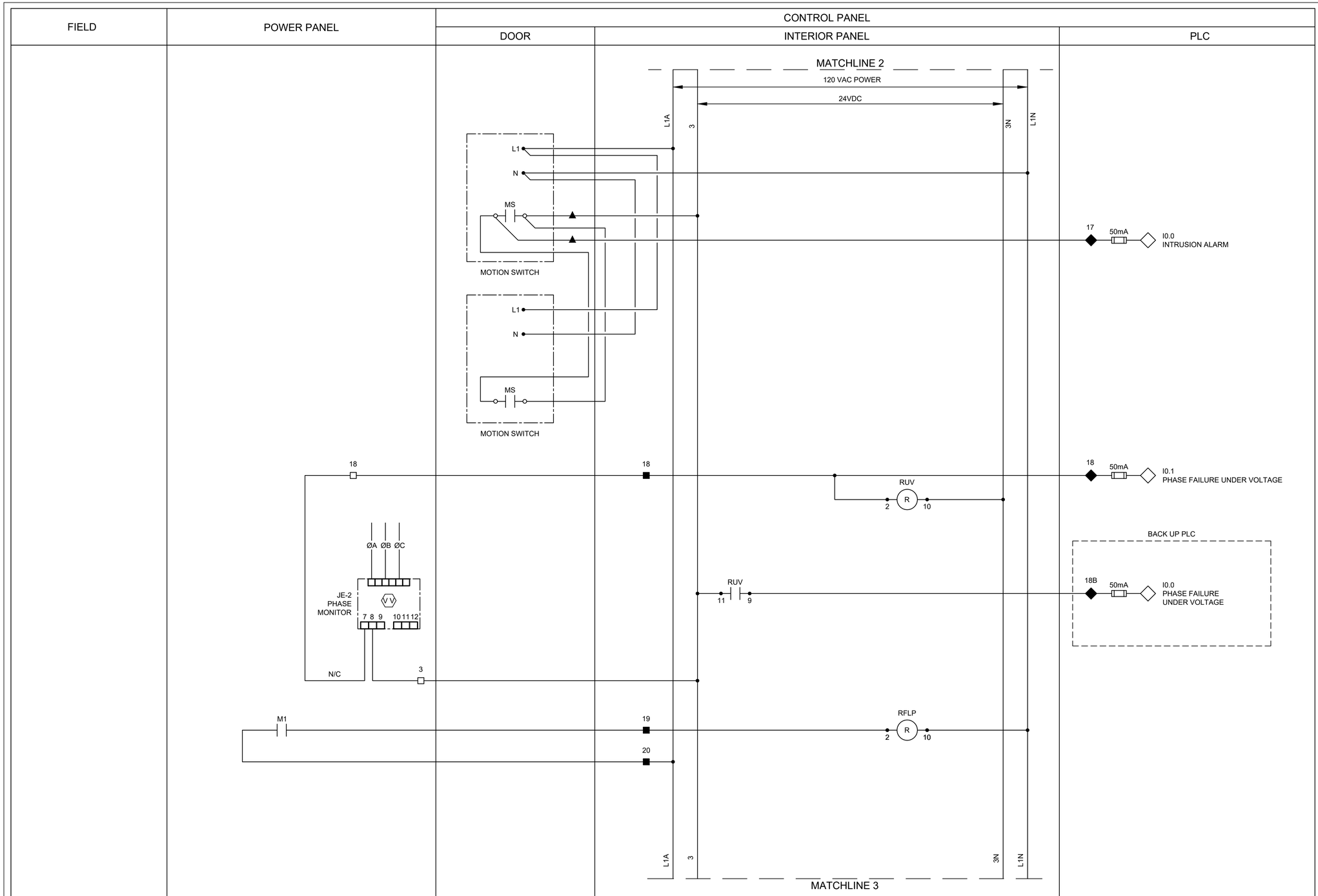

LEGEND

- △ DEVICE OR FIELD TERMINAL LOCATED AT MOTOR
- ✳ DEVICE OR FIELD TERMINAL LOCATED REMOTE
- □ DEVICE OR FIELD TERMINAL LOCATED AT MCC/POWER PANEL
- ■ FIELD TERMINAL LOCATED AT CONTROL PANEL
- ▲ REMOTE TERMINAL
- ● DEVICE TERMINAL NO.
- ◆ PLC INTERFACE TERMINAL

NOTES:

1. PROVIDE ONE LIMIT SWITCH PER EXTERIOR CONTROL PANEL AND POWER PANEL DOOR, WIRED IN PARALLEL.

GENERAL NOTES:

1. NO ELECTRICAL MATERIAL, APPARATUS, DEVICES, APPLIANCES, FIXTURES, OR EQUIPMENT SHALL BE SOLD OR INSTALLED IN THE CITY UNLESS THEY ARE IN CONFORMANCE WITH THE PROVISIONS OF SECTION 508 CITY OF HOUSTON ELECTRICAL CODE, THE LAWS OF THE STATE OF TEXAS AND ANY APPLICABLE RULES AND REGULATIONS ISSUED UNDER THE AUTHORITY OF THE STATE STATUES. THE MAKER'S NAME, TRADEMARK, OR OTHER IDENTIFICATION SYMBOL SHALL BE PLACED ON ALL ELECTRICAL MATERIALS, APPARATUS, DEVICES, APPLIANCES, FIXTURES, AND EQUIPMENT USED OR INSTALLED UNDER THE PROVISIONS OF THIS CODE. ALL ELECTRICAL MATERIALS AND EQUIPMENT SHALL BE LISTED AND LABELED FOR THE INTENDED USE AND SHALL BE INCLUDED IN A LIST PUBLISHED BY AN APPROVAL AGENCY.

NO.	DATE	REVISION	APP.
	MM/DD/YY	BRIEF DESCRIPTION	XXX
	MM/DD/YY	BRIEF DESCRIPTION	XXX
	MM/DD/YY	BRIEF DESCRIPTION	XXX

rps
A TETRA TECH COMPANY
Texas PE Firm Reg. #F-929
575 N. Dairy Ashford, Suite 700,
Houston, Texas 77079
T +1 281 589 7257
E usinfrastructure@rpsgroup.com

FOR INTERIM REVIEW ONLY NOT INTENDED FOR PERMIT, BIDDING OR CONSTRUCTION PURPOSES.
ENGINEER:
HOSS FOROUZAN
P.E. SERIAL NO.77748
03/30/2026

SURVEYED BY:
FB NO. F-4578

CITY OF HOUSTON
HOUSTON PUBLIC WORKS

RECONSTRUCTION & REHABILITATION
COH LIFT STATIONS

BROOKDALE LIFT STATION CONTROL PANEL CONTROL WIRING DIAGRAM–III

WBS NUMBER	FOR CITY OF HOUSTON USE ONLY
R-000267-00178-3	
DRAWING SCALE	
AS NOTED	
CITY OF HOUSTON PM	
TAHA LOTIA	
SHEET NO. 144 OF 268	

BR–I–10

FILE PATH: O:\H8109_Lift Station Rehabilitation And Reconstruction (Tetratech)\6 Drawings\Instrumentation And Control\Working\Brookdale\H8109_LIFT STATION.dwg
PLOTTED: 3/26/2026 5:51 PM

PLOTTED: 3/26/2026 5:51 PM
FILE PATH: O:\H8109_Lift Station Rehabilitation And Reconstruction (Tetratech)\6 Drawings\Instrumentation And Control\1Working\Brookdale\H8109_BR-I-11.dwg tb

FIELD	POWER PANEL	CONTROL PANEL		
		DOOR	INTERIOR PANEL	PLC

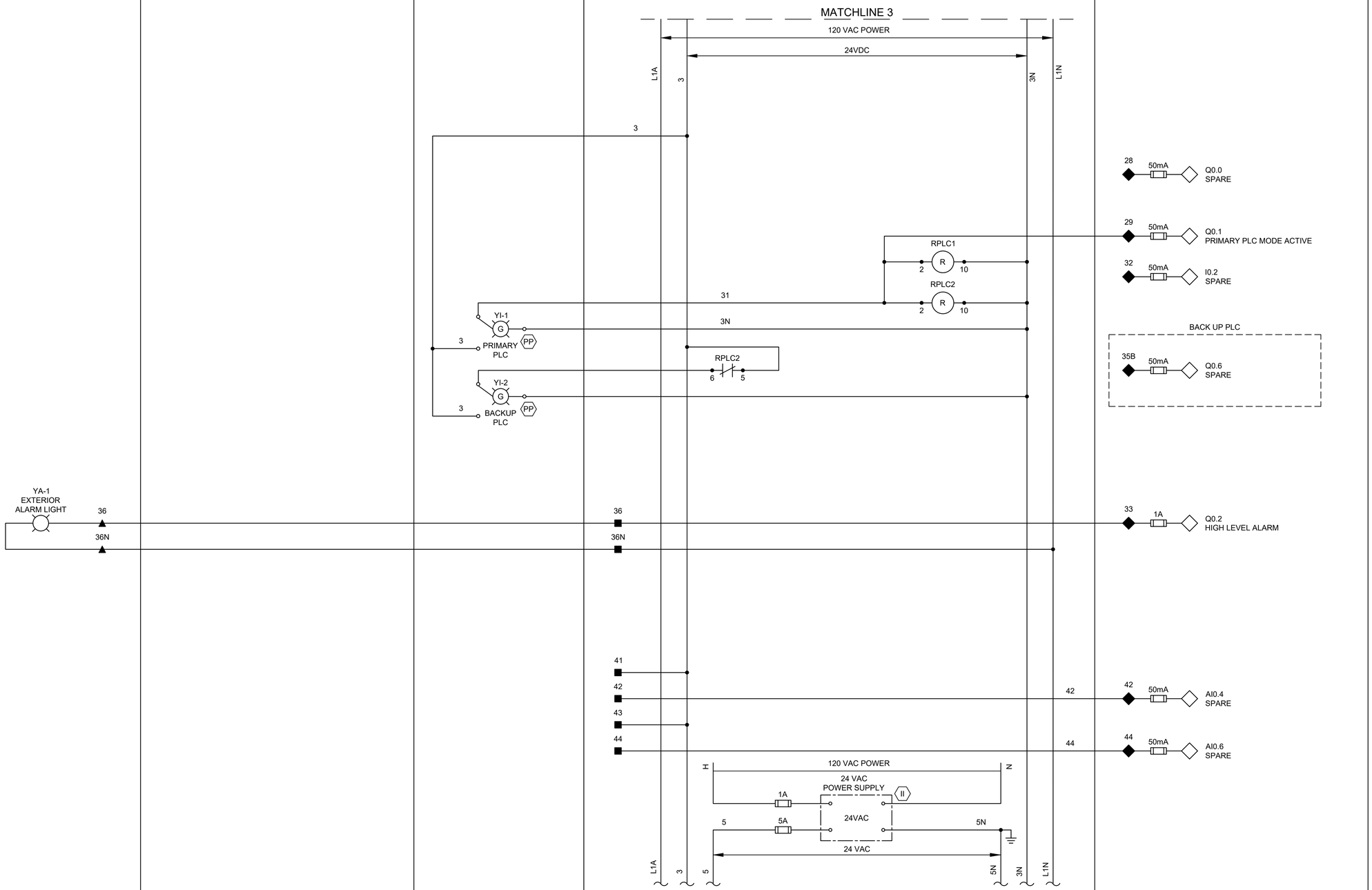

LEGEND

- △ DEVICE OR FIELD TERMINAL LOCATED AT MOTOR
- ✳ DEVICE OR FIELD TERMINAL LOCATED REMOTE
- □ DEVICE OR FIELD TERMINAL LOCATED AT MCC/POWER PANEL
- ■ FIELD TERMINAL LOCATED AT CONTROL PANEL
- ▲ REMOTE TERMINAL
- ● DEVICE TERMINAL NO.
- ◆ PLC INTERFACE TERMINAL

NO.	DATE	REVISION	APP.
	MM/DD/YY	BRIEF DESCRIPTION	XXX
	MM/DD/YY	BRIEF DESCRIPTION	XXX
	MM/DD/YY	BRIEF DESCRIPTION	XXX

GENERAL NOTES:

1. NO ELECTRICAL MATERIAL, APPARATUS, DEVICES, APPLIANCES, FIXTURES, OR EQUIPMENT SHALL BE SOLD OR INSTALLED IN THE CITY UNLESS THEY ARE IN CONFORMANCE WITH THE PROVISIONS OF SECTION 508 CITY OF HOUSTON ELECTRICAL CODE, THE LAWS OF THE STATE OF TEXAS AND ANY APPLICABLE RULES AND REGULATIONS ISSUED UNDER THE AUTHORITY OF THE STATE STATUES. THE MAKER'S NAME, TRADEMARK, OR OTHER IDENTIFICATION SYMBOL SHALL BE PLACED ON ALL ELECTRICAL MATERIALS, APPARATUS, DEVICES, APPLIANCES, FIXTURES, AND EQUIPMENT USED OR INSTALLED UNDER THE PROVISIONS OF THIS CODE. ALL ELECTRICAL MATERIALS AND EQUIPMENT SHALL BE LISTED AND LABELED FOR THE INTENDED USE AND SHALL BE INCLUDED IN A LIST PUBLISHED BY AN APPROVAL AGENCY.

RPS A TETRA TECH COMPANY
Texas PE Firm Reg. #F-929
575 N. Dairy Ashford, Suite 700,
Houston, Texas 77079
T +1 281 589 7257
E usinfrastructure@rpsgroup.com

SURVEYED BY:
FB NO. F-4578

FOR INTERIM REVIEW ONLY NOT INTENDED FOR PERMIT, BIDDING OR CONSTRUCTION PURPOSES.
ENGINEER:
HOSS FOROUZAN
P.E. SERIAL NO.77748
03/30/2026

CITY OF HOUSTON
HOUSTON PUBLIC WORKS

RECONSTRUCTION & REHABILITATION
COH LIFT STATIONS

BROOKDALE LIFT STATION CONTROL PANEL CONTROL WIRING DIAGRAM-IV

WBS NUMBER	FOR CITY OF HOUSTON USE ONLY
R-000267-00178-3	
DRAWING SCALE	
AS NOTED	
CITY OF HOUSTON PM	
TAHA LOTIA	
SHEET NO. 145 OF 268	

BR-I-11

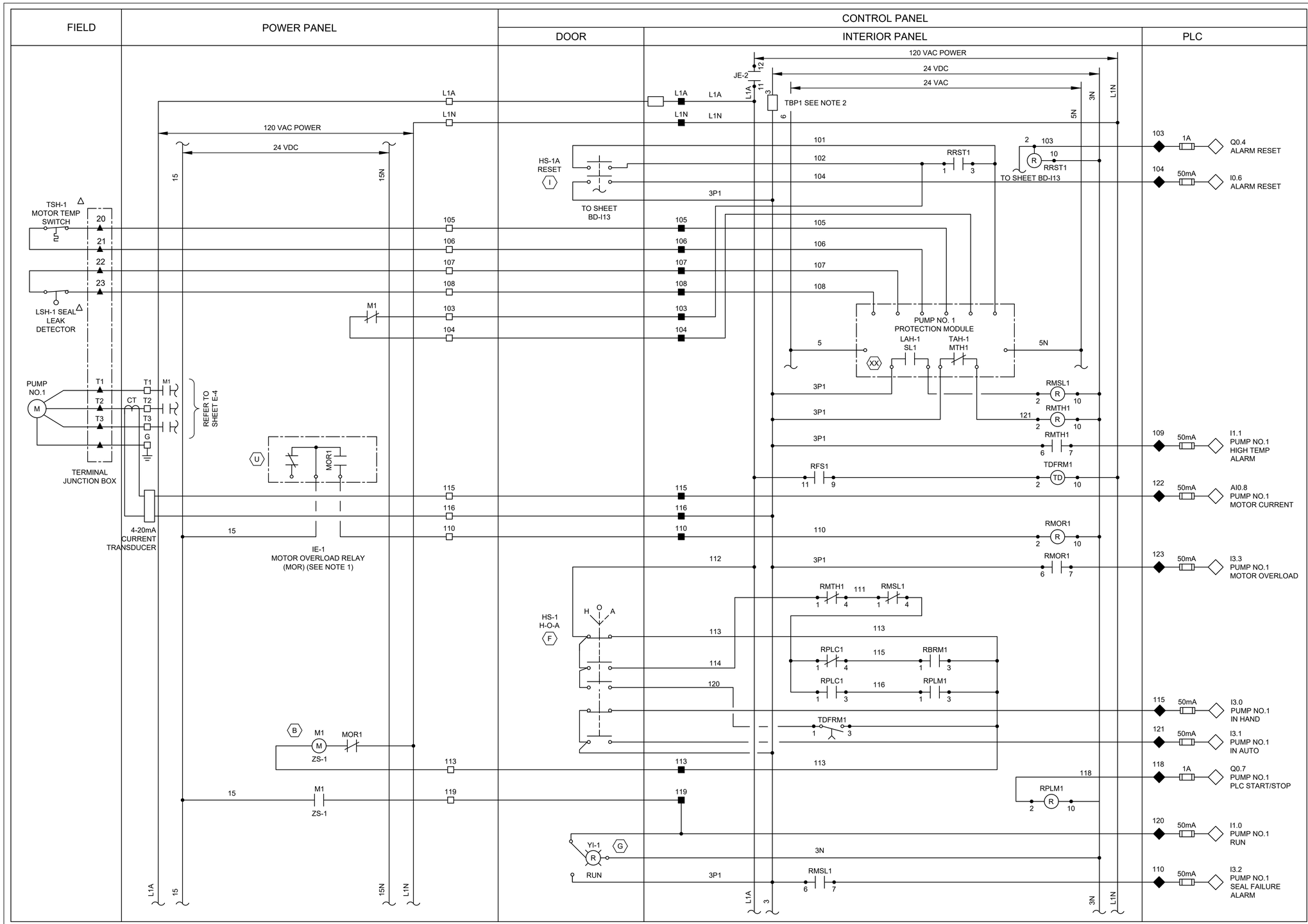

NOTES:

1. MOTOR OVERLOAD RELAY OUTPUT CONTACT SHOWN IS NORMALLY CLOSED WHEN RELAY IS DE-ENERGIZED, OPEN WHEN ENERGIZED, AND CLOSED WHEN IN ALARM. VERIFY OPERATION OF RELAY PROVIDED AND ADJUST CONNECTION OF RMOR AUXILIARY RELAYS.
2. FUSED TERMINAL ON TERMINAL BLOCK TB4 SEE CONTROL POWER AND COMMUNICATION WIRING DIAGRAM DRAWING NO. BD-I3.
3. ALL FLOAT CONTROL CIRCUIT WIRES COLOR SHALL BE YELLOW.

GENERAL NOTES:

1. NO ELECTRICAL MATERIAL, APPARATUS, DEVICES, APPLIANCES, FIXTURES, OR EQUIPMENT SHALL BE SOLD OR INSTALLED IN THE CITY UNLESS THEY ARE IN CONFORMANCE WITH THE PROVISIONS OF SECTION 508 CITY OF HOUSTON ELECTRICAL CODE, THE LAWS OF THE STATE OF TEXAS AND ANY APPLICABLE RULES AND REGULATIONS ISSUED UNDER THE AUTHORITY OF THE STATE STATUES. THE MAKER'S NAME, TRADEMARK, OR OTHER IDENTIFICATION SYMBOL SHALL BE PLACED ON ALL ELECTRICAL MATERIALS, APPARATUS, DEVICES, APPLIANCES, FIXTURES, AND EQUIPMENT USED OR INSTALLED UNDER THE PROVISIONS OF THIS CODE. ALL ELECTRICAL MATERIALS AND EQUIPMENT SHALL BE LISTED AND LABELED FOR THE INTENDED USE AND SHALL BE INCLUDED IN A LIST PUBLISHED BY AN APPROVAL AGENCY.

LEGEND

- △ DEVICE OR FIELD TERMINAL LOCATED AT MOTOR
- ✳ DEVICE OR FIELD TERMINAL LOCATED REMOTE
- □ DEVICE OR FIELD TERMINAL LOCATED AT MCC/POWER PANEL
- ■ FIELD TERMINAL LOCATED AT CONTROL PANEL
- ▲ REMOTE TERMINAL
- ● DEVICE TERMINAL NO.
- ◆ PLC INTERFACE TERMINAL

NO.	DATE	REVISION	APP.
	MM/DD/YY	BRIEF DESCRIPTION	XXX
	MM/DD/YY	BRIEF DESCRIPTION	XXX
	MM/DD/YY	BRIEF DESCRIPTION	XXX

rps
A TETRA TECH COMPANY
Texas PE Firm Reg. #F-929
575 N. Dairy Ashford, Suite 700, Houston, Texas 77079
T +1 281 589 7257
E usinfrastructure@rpsgroup.com

FOR INTERIM REVIEW ONLY NOT INTENDED FOR PERMIT, BIDDING OR CONSTRUCTION PURPOSES.
ENGINEER: HOSS FOROUZAN
P.E. SERIAL NO.77748
03/30/2026

SURVEYED BY:
FB NO. F-4578

CITY OF HOUSTON
HOUSTON PUBLIC WORKS

RECONSTRUCTION & REHABILITATION
COH LIFT STATIONS

BROOKDALE LIFT STATION PUMP NO.1 CONTROL WIRING DIAGRAM

WBS NUMBER	FOR CITY OF HOUSTON USE ONLY
R-000267-00178-3	
DRAWING SCALE	
AS NOTED	
CITY OF HOUSTON PM	
TAHA LOTIA	
SHEET NO. 147 OF 268	

BR-I-12

FILE PATH: O:\H8109_Lift Station Rehabilitation And Reconstruction (Tetratech)\6 Drawings\Instrumentation And Control\Working\Brookdale\H8109_BR-I-12.dwg
PLOTTED: 3/26/2026 5:51 PM

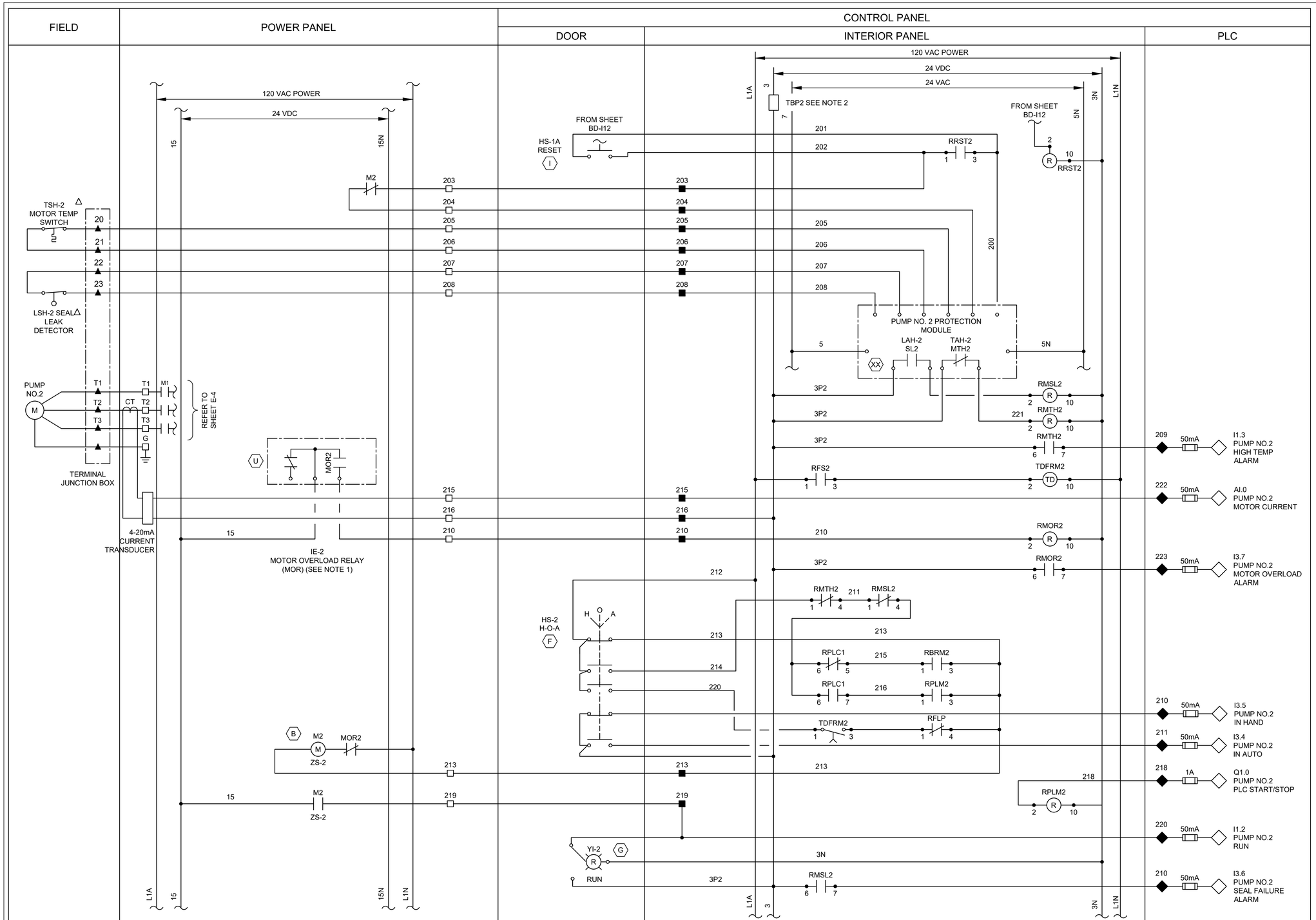

LEGEND

- △ DEVICE OR FIELD TERMINAL LOCATED AT MOTOR
- ✳ DEVICE OR FIELD TERMINAL LOCATED REMOTE
- □ DEVICE OR FIELD TERMINAL LOCATED AT MCC/POWER PANEL
- ■ FIELD TERMINAL LOCATED AT CONTROL PANEL
- ▲ REMOTE TERMINAL
- ● DEVICE TERMINAL NO.
- ◆ PLC INTERFACE TERMINAL

NOTES:

1. MOTOR OVERLOAD RELAY OUTPUT CONTACT SHOWN IS NORMALLY CLOSED WHEN RELAY IS DE-ENERGIZED, OPEN WHEN ENERGIZED, AND CLOSED WHEN IN ALARM. VERIFY OPERATION OF RELAY PROVIDED AND ADJUST CONNECTION OF RMOR AUXILIARY RELAYS.
2. FUSED TERMINAL ON TERMINAL BLOCK TB4 SEE CONTROL POWER AND COMMUNICATION WIRING DIAGRAM DRAWING NO. BD-I3.
3. ALL FLOAT CONTROL CIRCUIT WIRES COLOR SHALL BE YELLOW.

GENERAL NOTES:

1. NO ELECTRICAL MATERIAL, APPARATUS, DEVICES, APPLIANCES, FIXTURES, OR EQUIPMENT SHALL BE SOLD OR INSTALLED IN THE CITY UNLESS THEY ARE IN CONFORMANCE WITH THE PROVISIONS OF SECTION 508 CITY OF HOUSTON ELECTRICAL CODE, THE LAWS OF THE STATE OF TEXAS AND ANY APPLICABLE RULES AND REGULATIONS ISSUED UNDER THE AUTHORITY OF THE STATE STATUES. THE MAKER'S NAME, TRADEMARK, OR OTHER IDENTIFICATION SYMBOL SHALL BE PLACED ON ALL ELECTRICAL MATERIALS, APPARATUS, DEVICES, APPLIANCES, FIXTURES, AND EQUIPMENT USED OR INSTALLED UNDER THE PROVISIONS OF THIS CODE. ALL ELECTRICAL MATERIALS AND EQUIPMENT SHALL BE LISTED AND LABELED FOR THE INTENDED USE AND SHALL BE INCLUDED IN A LIST PUBLISHED BY AN APPROVAL AGENCY.

NO.	DATE	REVISION	APP.
	MM/DD/YY	BRIEF DESCRIPTION	XXX
	MM/DD/YY	BRIEF DESCRIPTION	XXX
	MM/DD/YY	BRIEF DESCRIPTION	XXX

rps A TETRA TECH COMPANY
Texas PE Firm Reg. #F-929
575 N. Dairy Ashford, Suite 700, Houston, Texas 77079
T +1 281 589 7257
E usinfrastructure@rpsgroup.com

FOR INTERIM REVIEW ONLY NOT INTENDED FOR PERMIT, BIDDING OR CONSTRUCTION PURPOSES.
ENGINEER: HOSS FOROUZAN
P.E. SERIAL NO.77748
03/30/2026

SURVEYED BY:
FB NO. F-4578

CITY OF HOUSTON
HOUSTON PUBLIC WORKS

RECONSTRUCTION & REHABILITATION
COH LIFT STATIONS

BROOKDALE LIFT STATION PUMP NO.2 CONTROL WIRING DIAGRAM

WBS NUMBER	FOR CITY OF HOUSTON USE ONLY
R-000267-00178-3	
DRAWING SCALE	
AS NOTED	
CITY OF HOUSTON PM	
TAHA LOTIA	
SHEET NO. 151 OF 312	

BR-I-13

PLOTTED: 3/26/2026 5:51 PM
FILE PATH: O:\H8109_Lift Station Rehabilitation And Reconstruction (Tetratech)\6 Drawings\Instrumentation And Control\Working\Brookdale\H8109_BR-I-13.dwg

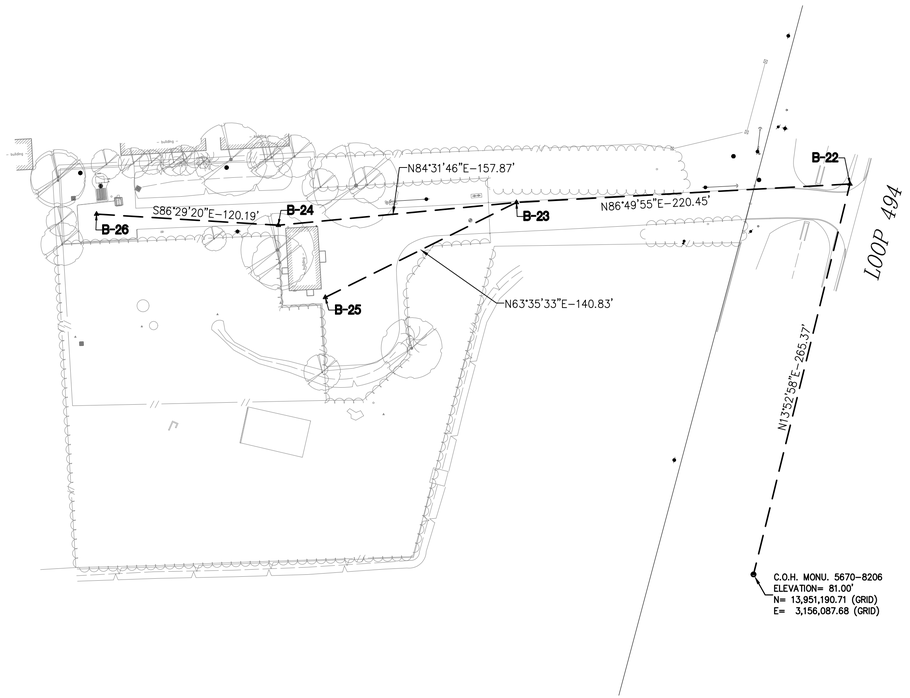

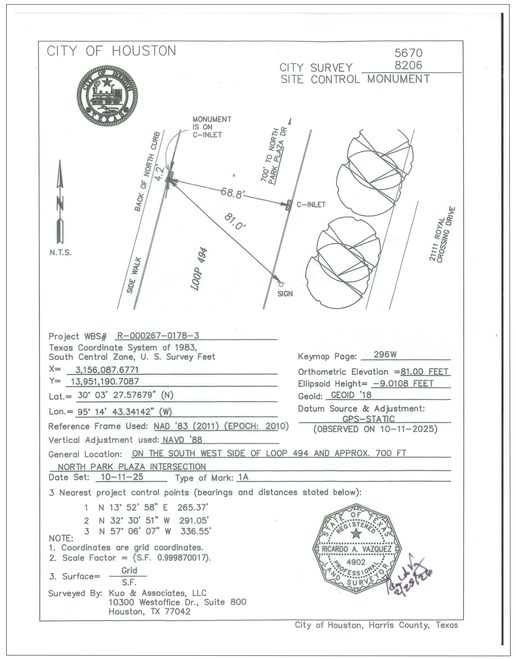

SURVEY BASELINE POINTS DATA (TEMPORARY BENCHMARK)						
POINT No.	NORTHING (SURFACE)	EASTING (SURFACE)	NORTHING (GRID)	EASTING (GRID)	ELEVATION	DESCRIPTION
B-22	13,953,261.98	3,156,561.64	13,951,448.29	3,156,151.34	80.70'	SET 'X' CUT ON CONC.
B-23	13,953,249.79	3,156,341.53	13,951,436.11	3,155,931.26	79.20'	SET 'X' CUT ON CONC.
B-24	13,953,234.74	3,156,184.38	13,951,421.06	3,155,774.13	78.56'	SET 'X' CUT ON CONC.
B-25	13,953,187.16	3,156,215.39	13,951,373.48	3,155,805.14	78.77'	SET 'X' CUT ON CONC.
B-26	13,953,242.10	3,156,064.42	13,951,428.42	3,155,654.18	77.80'	SET 'X' CUT ON CONC.



EXIST. TOPOGRAPHIC LEGEND

- ASPHALT SYMBOL
- B OR BB INLET
- BUSH
- C INLET
- CLEANOUT
- brick column
- DOWN GUY
- E INLET
- ELEC MANHOLE
- FIRE HYDRANT
- GAS METER
- GAS VALVE
- GATE
- GRATE INLET
- GRATE INLET
- MAIL BOX
- STORM MANHOLE
- SANITARY MANHOLE
- PLANTER
- POWER POLE
- POWER POLE W/LT.
- SIGN
- SIGNAL POLE
- SPRINKLER VALVE
- SPRINKLER HEAD
- STREET LIGHT/FLOOD LIGHT
- STREET LIGHT/PARKING LIGHT
- TREE
- TREE STUMP
- TREE-CREPE MYRTLE
- TREE-PINE
- WATER METER
- WATER VALVE
- IRRIGATION CONTROL VALVE

ABBREVIATIONS

BC – BACK OF CURB
EA – EDGE OF ASPHALT
EC – EDGE OF CONCRETE
EG – EDGE OF GRAVEL
FH – FIRE HYDRANT
FC – FENCE CORNER
LT – LIGHT POLE
MB – MAIL BOX
MH – MANHOLE
PP – POWER POLE
PP/LIGHT – POWER POLE W/LIGHT
STLT – STREET LIGHT
TRLT – TRAFFIC LIGHT
WM – WATER METER

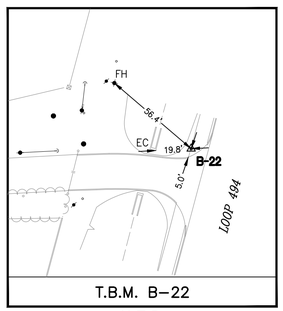

T.B.M. B-22

N.T.S.

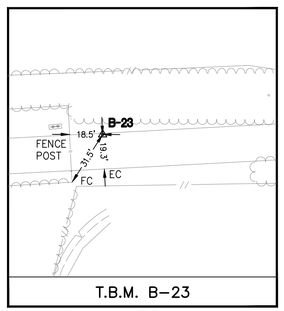

T.B.M. B-23

N.T.S.

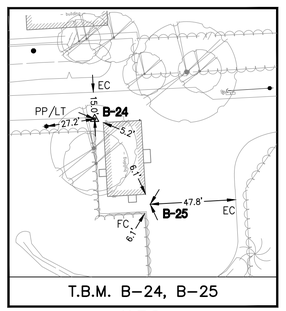

T.B.M. B-24, B-25

N.T.S.

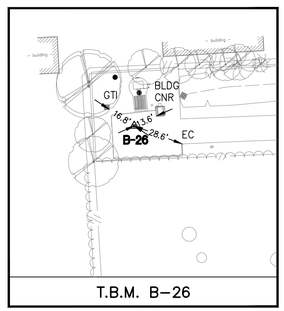

T.B.M. B-26

N.T.S.

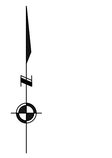

NO.	DATE	REVISION	APP.

BENCHMARK:

CITY OF HOUSTON MONUMENT 5670-8206 IS AN ALUMINUM DISK ON TOP OF INLET LOCATED ON LOOP 494 APPROXIMATELY 700 FEET SOUTH FROM THE INTERSECTION OF NORTH PARK PLAZA.

ELEV. 81.29 FEET NAVD 1988, 2001 AJUSTMENT(PROJECT DATUM)
ELEV. 81.00 FEET NAVD 1988, (GEOID '18)*

* OBSERVED BY GPS SURVEYING AND PROCESSED IN REFERENCE TO THE CORS DATED OCTOBER 17, 2025.

VERTICAL DATU ADJUSTMENT:

THE ELEVATION DIFFERENCE IN BETWEEN THE FLOODPLAIN REFERENCE MARK'S (RM 070265)PUBLISHED DATUM NAVD 1988, 2001 ADJUSTMENT AND DATUM NAVD 1988, (GEOID '18) IS 0.29'.

NAVD 1988, 2001 ADJ. ELEVATION
= NAVD 1988 (GEOID '18) ELEVATION + 0.29 FT

NOTE:

ALL BEARINGS AND DISTANCES ARE BASED ON TEXAS STATE PLANE COORDINATE SYSTEM, SOUTH CENTRAL ZONE NO. 4204, NAD83. ALL DISTANCES ARE IN SURFACE.

THE COORDINATES SHOWN HEREON ARE TEXAS SOUTH CENTRAL ZONE NO. 4204 STATE PLANE GRID COORDINATES (NAD83) AND MAY BE BROUGHT TO SURFACE BY DIVIDING BY THE COMBINED SCALE FACTOR 0.999870017.

LEGEND:

- **B-X** SURVEY CONTROL POINT NUMBER
- C–X DESIGN BASELINE POINT NUMBER
- SURVEY CONTROL POINT
- DESIGN BASELINE POINT
- CITY OF HOUSTON MONUMENT
- S. BL: SURVEY BASELINE

RPS
A TETRA TECH COMPANY
Texas PE Firm Reg. #F-929
575 N. Dairy Ashford, Suite 700,
Houston, Texas 77079
T +1 281 589 7257
E usinfrastructure@rpsgroup.com

KUO & ASSOCIATES
ENGINEERING + SURVEYING
10300 Westoffice Dr., Suite 800, Houston, Texas 77042
Tel: 713-975-8769, Fax: 713-975-0920, www.kuoassociates.com
TBPELS Firm Registration No. F-4578
TBPELS Firm Registration No. 1007560

THIS DOCUMENT IS RELEASED FOR THE PURPOSE OF INTERIM REVIEW UNDER THE AUTHORITY OF
RICARDO A. VAZQUEZ, R.P.L.S.
TEXAS REG. NO.: 4902
ON 02/26/2026
IT IS NOT TO BE USED FOR PERMIT, BIDDING OR CONSTRUCTION PURPOSES

CITY OF HOUSTON
HOUSTON PUBLIC WORKS

RECONSTRUCTION & REHABILITATION
COH LIFT STATIONS

MCMUD #58 LS
SURVEY CONTROL MAP
MC58-SC-1

WBS NUMBER	FOR CITY OF HOUSTON USE ONLY
R-000267-0178-3	
DRAWING SCALE	
AS SHOWN	
CITY OF HOUSTON PM	
TAHA LOTIA	
SHEET NO. 148 OF 268	

National Flood Hazard Layer FIRMette

FEMA

95°13'44"W 30°7'28"N

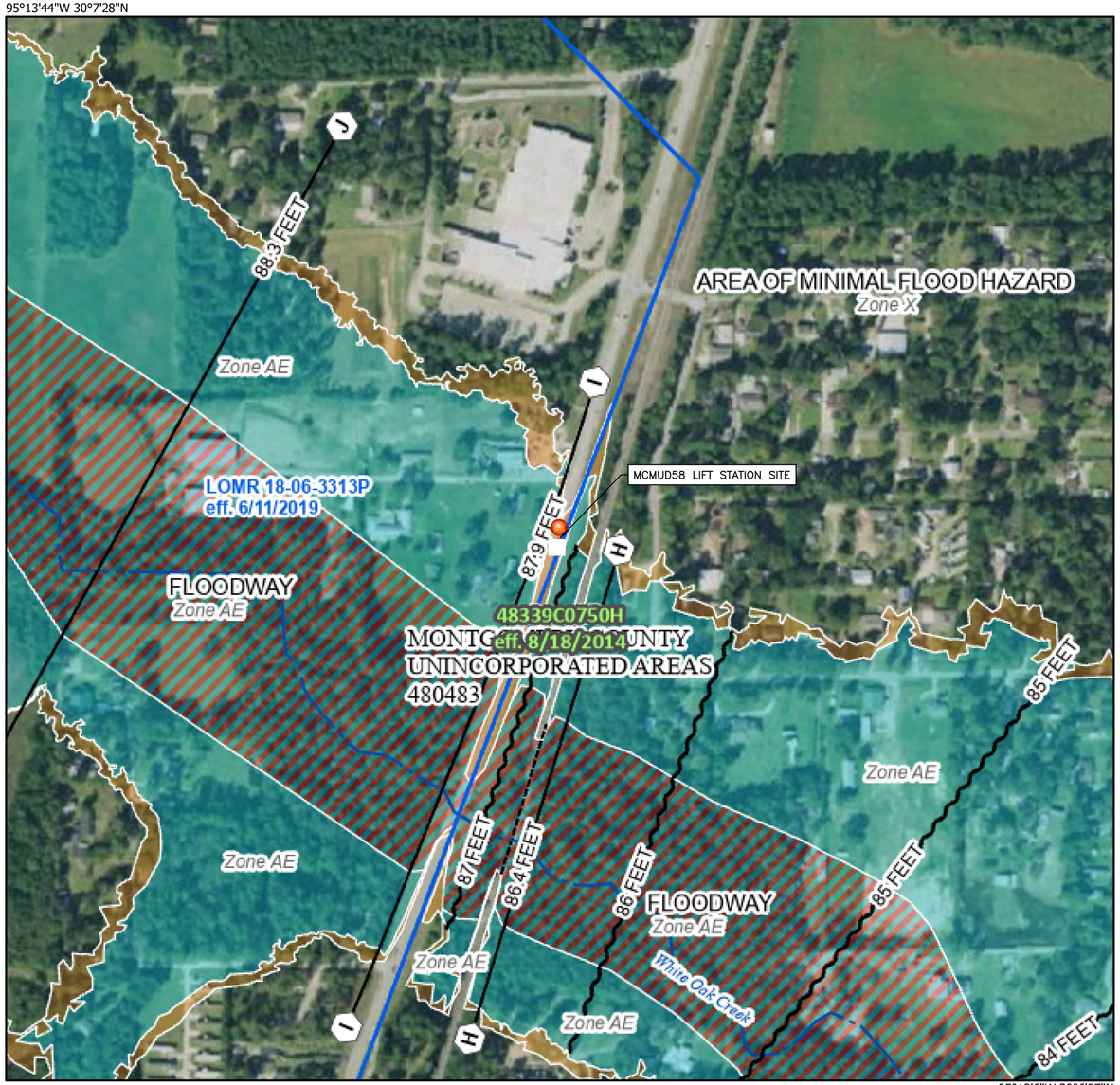

95°13'6"W 30°6'57"N

0 250 500 1,000 1,500 2,000 Feet

1:6,000

Basemap Imagery Source: USGS National Map 2023

Legend

SEE FIS REPORT FOR DETAILED LEGEND AND INDEX MAP FOR FIRM PANEL LAYOUT

SPECIAL FLOOD HAZARD AREAS
- Without Base Flood Elevation (BFE) *Zone A, V, A99*
- With BFE or Depth *Zone AE, AO, AH, VE, AR*
- Regulatory Floodway

OTHER AREAS OF FLOOD HAZARD
- 0.2% Annual Chance Flood Hazard, Areas of 1% annual chance flood with average depth less than one foot or with drainage areas of less than one square mile *Zone X*
- Future Conditions 1% Annual Chance Flood Hazard *Zone X*
- Area with Reduced Flood Risk due to Levee. See Notes. *Zone X*
- Area with Flood Risk due to Levee *Zone D*

OTHER AREAS
- NO SCREEN — Area of Minimal Flood Hazard *Zone X*
- Effective LOMRs
- Area of Undetermined Flood Hazard *Zone D*

GENERAL STRUCTURES
- Channel, Culvert, or Storm Sewer
- Levee, Dike, or Floodwall

OTHER FEATURES
- 20.2 / 17.5 — Cross Sections with 1% Annual Chance Water Surface Elevation
- Coastal Transect
- Base Flood Elevation Line (BFE)
- Limit of Study
- Jurisdiction Boundary
- Coastal Transect Baseline
- Profile Baseline
- Hydrographic Feature

MAP PANELS
- Digital Data Available
- No Digital Data Available
- Unmapped

N

The pin displayed on the map is an approximate point selected by the user and does not represent an authoritative property location.

This map complies with FEMA's standards for the use of digital flood maps if it is not void as described below. The basemap shown complies with FEMA's basemap accuracy standards

The flood hazard information is derived directly from the authoritative NFHL web services provided by FEMA. This map was exported on 7/31/2024 at 2:02 PM and does not reflect changes or amendments subsequent to this date and time. The NFHL and effective information may change or become superseded by new data over time.

This map image is void if the one or more of the following map elements do not appear: basemap imagery, flood zone labels, legend, scale bar, map creation date, community identifiers, FIRM panel number, and FIRM effective date. Map images for unmapped and unmodernized areas cannot be used for regulatory purposes.

RPS A TETRA TECH COMPANY
Texas PE Firm Reg. #F-929
575 N. Dairy Ashford, Suite 700,
Houston, Texas 77079
T +1 281 589 7257
E usinfrastructure@rpsgroup.com

SURVEYED BY: KUO Inc.
FB NO. F-4578

This document is released for the purposes of interim review only under the authority of:

Neha Raval, P.E.
Texas P.E. No. 141506
03/30/2026

It is not to be used for bidding, construction, or permitting purposes.

CITY OF HOUSTON
HOUSTON PUBLIC WORKS

RECONSTRUCTION & REHABILITATION
COH LIFT STATIONS

FIRMETTE – MCMUD58 LS – 28
MC58–FC–1

WBS NUMBER	FOR CITY OF HOUSTON USE ONLY
R–000267–0178–3	
DRAWING SCALE	
AS NOTED	
CITY OF HOUSTON PM	
TAHA LOTIA	
SHEET NO. 149 OF 268	

PLOTTED: 3/30/2026 5:00 PM
PLOT STYLE: Coh_ctb_230809.ctb
FILE NAME: FIRMETTE – MCMUD58 LS.dwg

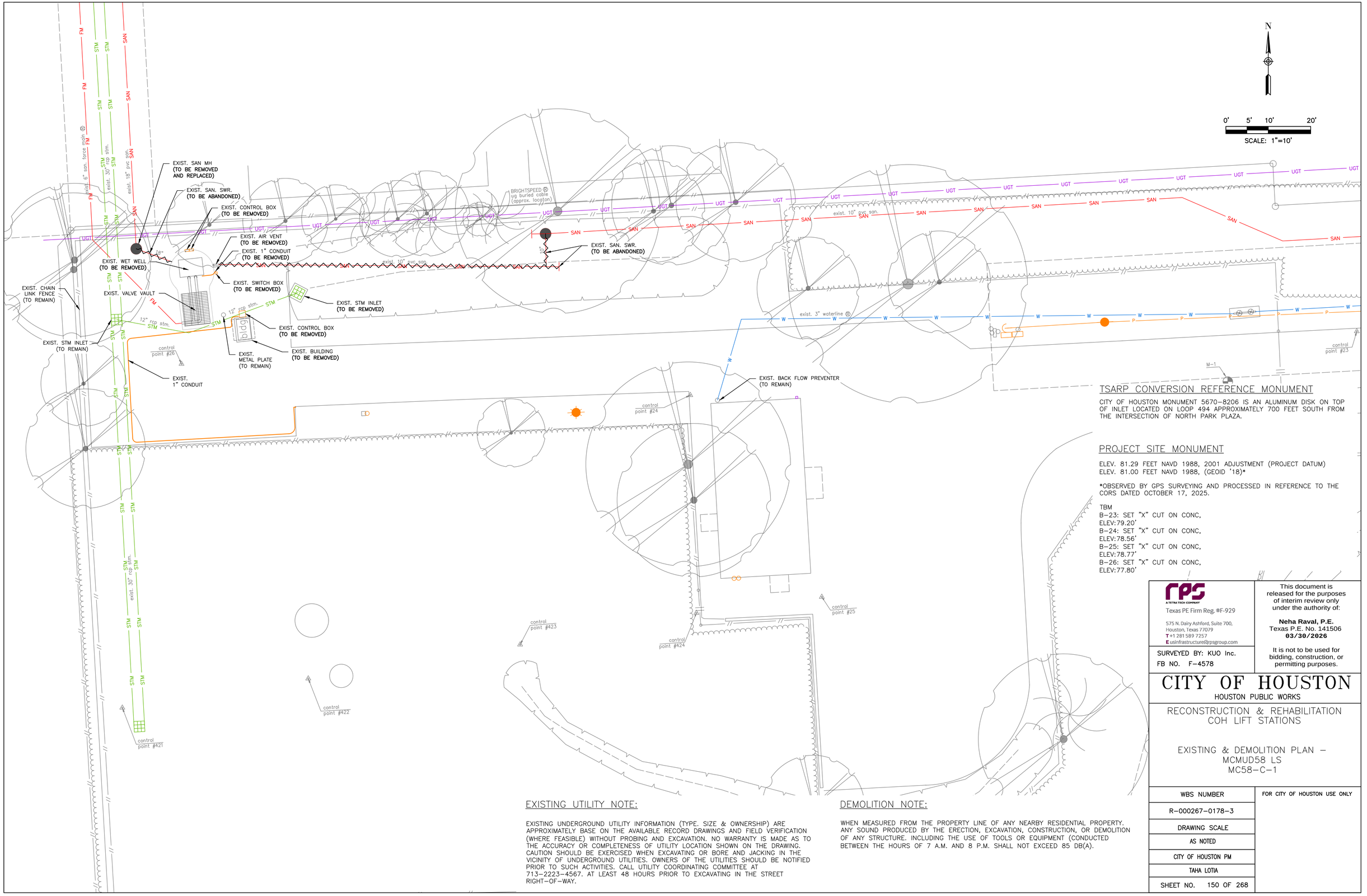

TSARP CONVERSION REFERENCE MONUMENT

CITY OF HOUSTON MONUMENT 5670-8206 IS AN ALUMINUM DISK ON TOP OF INLET LOCATED ON LOOP 494 APPROXIMATELY 700 FEET SOUTH FROM THE INTERSECTION OF NORTH PARK PLAZA.

PROJECT SITE MONUMENT

ELEV. 81.29 FEET NAVD 1988, 2001 ADJUSTMENT (PROJECT DATUM)
ELEV. 81.00 FEET NAVD 1988, (GEOID '18)*

*OBSERVED BY GPS SURVEYING AND PROCESSED IN REFERENCE TO THE CORS DATED OCTOBER 17, 2025.

TBM
B-23: SET "X" CUT ON CONC, ELEV:79.20'
B-24: SET "X" CUT ON CONC, ELEV:78.56'
B-25: SET "X" CUT ON CONC, ELEV:78.77'
B-26: SET "X" CUT ON CONC, ELEV:77.80'

EXISTING UTILITY NOTE:

EXISTING UNDERGROUND UTILITY INFORMATION (TYPE, SIZE & OWNERSHIP) ARE APPROXIMATELY BASE ON THE AVAILABLE RECORD DRAWINGS AND FIELD VERIFICATION (WHERE FEASIBLE) WITHOUT PROBING AND EXCAVATION. NO WARRANTY IS MADE AS TO THE ACCURACY OR COMPLETENESS OF UTILITY LOCATION SHOWN ON THE DRAWING. CAUTION SHOULD BE EXERCISED WHEN EXCAVATING OR BORE AND JACKING IN THE VICINITY OF UNDERGROUND UTILITIES. OWNERS OF THE UTILITIES SHOULD BE NOTIFIED PRIOR TO SUCH ACTIVITIES. CALL UTILITY COORDINATING COMMITTEE AT 713-2223-4567. AT LEAST 48 HOURS PRIOR TO EXCAVATING IN THE STREET RIGHT-OF-WAY.

DEMOLITION NOTE:

WHEN MEASURED FROM THE PROPERTY LINE OF ANY NEARBY RESIDENTIAL PROPERTY, ANY SOUND PRODUCED BY THE ERECTION, EXCAVATION, CONSTRUCTION, OR DEMOLITION OF ANY STRUCTURE, INCLUDING THE USE OF TOOLS OR EQUIPMENT (CONDUCTED BETWEEN THE HOURS OF 7 A.M. AND 8 P.M. SHALL NOT EXCEED 85 DB(A).

RPS A TETRA TECH COMPANY
Texas PE Firm Reg. #F-929
575 N. Dairy Ashford, Suite 700,
Houston, Texas 77079
T +1 281 589 7257
E usinfrastructure@rpsgroup.com

SURVEYED BY: KUO Inc.
FB NO. F-4578

This document is released for the purposes of interim review only under the authority of:

Neha Raval, P.E.
Texas P.E. No. 141506
03/30/2026

It is not to be used for bidding, construction, or permitting purposes.

CITY OF HOUSTON
HOUSTON PUBLIC WORKS

RECONSTRUCTION & REHABILITATION
COH LIFT STATIONS

EXISTING & DEMOLITION PLAN –
MCMUD58 LS
MC58-C-1

WBS NUMBER	FOR CITY OF HOUSTON USE ONLY
R-000267-0178-3	
DRAWING SCALE	
AS NOTED	
CITY OF HOUSTON PM	
TAHA LOTIA	
SHEET NO. 150 OF 268	

PLOTTED: 3/30/2026 5:00 PM
PLOT STYLE: Coh_ctb_230809.ctb
FILE NAME: EXISTING SITE PLAN - MCMUD58 LS EX.dwg

PLOTTED: 3/30/2026 5:00 PM
PLOT STYLE: Coh_ctb_230809.ctb
FILE NAME: PROPOSED SITE PLAN – MCMUD58 LS.dwg

N

0' 5' 10' 20'
SCALE: 1"=10'

SAN MH
N=13953269.25
E=3156053.75
RIM 77.88
18" (E) FL 62.43
18" (N) FL 62.43

INFLUENT MH
N=13953270.24
E=3156080.53
RIM 77.26
18" (W) FL 62.39
18" (S) FL 62.29
10" (E) FL 63.13

10' DIA WET WELL & ABOVE GROUND PIPING WITH BYPASS FITTING

CONTRACTOR TO USE CAUTION. ABANDONED SEWER IN THIS AREA.

SAN MH
N=13953272.80
E=3156150.25
RIM 77.94
10" (W) FL 63.36
10" (E) FL 63.46

184' TO LOOP 494 ROW

CONCRETE PAVEMENT

FM BYPASS MH
(SEE SHEET XX)

13 LF OF 6" FM

LIGHTING TRANSFORMER
(SEE ELECTRICAL SHEET XX)

REGRADE 23 LF OF DITCH

GRATE INLET
N=13953249.62
E=3156110.81
RIM 76.95
12" (W) FL 74.01

GRATE INLET
N=13953243.72
E=3156092.64
RIM 77.78
12" (W) FL 73.96
12" (E) FL 73.96

GRATE INLET
N=13953241.09
E=3156049.69
RIM 77.87
30" (S) FL 72.89
30" (N) FL 72.89
12" (E) FL 73.84

NATURAL GAS GENERATOR
(SEE ELECTRICAL SHEET XX)

SEE CONC. PAVEMENT SECTION DETAIL SHEET 28

SERVICE RACK
(SEE ELECTRICAL SHEET XX)

ELECTRICAL PLATFORM
(SEE ELECTRICAL SHEET XX)

ELECTRICAL PLATFORM
(SEE ELECTRICAL SHEET XX)

COMM/PPU PANEL
(SEE ELECTRICAL SHEET XX)

CONTROL PANEL
(SEE ELECTRICAL SHEET XX)

control point #421
control point #422
control point #423
control point #424
control point #25
control point #22
control point #24

exist. 6" san. force main
exist. 30" rcp strm.
exist. 18" pvc san.
exist. 10" pvc san.
exist. 3" waterline
BRIGHTSPEED ug buried cable (approx. location)
CenterPoint Energy 4" ip str. main
COMCAST ug buried cable (approx. location)
LOOP 494
ROW

CONTRACTOR TO COORDINATE WITH CENTERPOINT ENERGY FOR GAS SERVICE CONNECTION

CONSTRUCTION NOTES

1. VERIFY ALL EXISTING DIMENSIONS, ELEVATIONS, INVERTS, AND UTILITIES IN THE FIELD BEFORE CONSTRUCTION.
2. UTILITY LOCATIONS SHOWN ARE APPROXIMATE AND BASED ON AVAILABLE RECORDS AND SURVEY INFORMATION.
3. MAINTAIN CONTINUOUS SANITARY SEWER SERVICE DURING CONSTRUCTION; PROVIDE BYPASS PUMPING AS REQUIRED.
4. ABANDON EXISTING SEWERS AND APPURTENANCES AS INDICATED AND IN ACCORDANCE WITH CITY OF HOUSTON REQUIREMENTS.
5. PROTECT EXISTING FACILITIES DESIGNATED TO REMAIN.
6. PROVIDE POSITIVE DRAINAGE AWAY FROM ALL LIFT STATION STRUCTURES AND EQUIPMENT PADS.
7. RESTORE DISTURBED AREAS TO EQUAL OR BETTER CONDITION.

TSARP CONVERSION REFERENCE MONUMENT

CITY OF HOUSTON MONUMENT 5670–8206 IS AN ALUMINUM DISK ON TOP OF INLET LOCATED ON LOOP 494 APPROXIMATELY 700 FEET SOUTH FROM THE INTERSECTION OF NORTH PARK PLAZA.

PROJECT SITE MONUMENT

ELEV. 81.29 FEET NAVD 1988, 2001 ADJUSTMENT (PROJECT DATUM)
ELEV. 81.00 FEET NAVD 1988, (GEOID '18)*

*OBSERVED BY GPS SURVEYING AND PROCESSED IN REFERENCE TO THE CORS DATED OCTOBER 17, 2025.

TBM
B–23: SET "X" CUT ON CONC, ELEV:79.20'
B–24: SET "X" CUT ON CONC, ELEV:78.56'
B–25: SET "X" CUT ON CONC, ELEV:78.77'
B–26: SET "X" CUT ON CONC, ELEV:77.80'

RPS A TETRA TECH COMPANY
Texas PE Firm Reg. #F-929
575 N. Dairy Ashford, Suite 700,
Houston, Texas 77079
T +1 281 589 7257
E usinfrastructure@rpsgroup.com

SURVEYED BY: KUO Inc.
FB NO. F–4578

This document is released for the purposes of interim review only under the authority of:

Neha Raval, P.E.
Texas P.E. No. 141506
03/30/2026

It is not to be used for bidding, construction, or permitting purposes.

CITY OF HOUSTON
HOUSTON PUBLIC WORKS

RECONSTRUCTION & REHABILITATION
COH LIFT STATIONS

PROPOSED SITE PLAN
– MCMUD58 LS
MC58–C–2

WBS NUMBER	FOR CITY OF HOUSTON USE ONLY
R–000267–0178–3	
DRAWING SCALE	
AS NOTED	
CITY OF HOUSTON PM	
TAHA LOTIA	
SHEET NO. 151 OF 268	

PLOTTED: 3/30/2026 5:00 PM
PLOT STYLE: Coh_ctb_230809.ctb
FILE NAME: PROPOSED GRADING - STORM SEWER AND UTILITY PLAN - MCMUD58 LS.dwg

N

0' 5' 10' 20'

SCALE: 1"=10'

NOTES:
1. CONTRACTOR TO MAINTAIN POSITIVE DRAINAGE.

LEGEND

EG XX.XX	EXISTING GRADE
FG XX.XX	FINISHED GRADE
TC XX.XX	TOP OF CONCRETE
XX.XX%	FLOW DIRECTION

SAN MH
RIM 77.88

INFLUENT MH
RIM 77.26

SAN. MH
RIM 77.94

FM BYPASS MH
RIM 77.93

28 LF OF DITCH @ 0.33%

GRATE INLET
RIM 76.95

GRATE INLET
RIM 77.78

LIGHTING TRANSFORMER
(SEE ELECTRICAL SHEET XX)

GRATE INLET
RIM 77.87

NATURAL GAS GENERATOR
(SEE ELECTRICAL SHEET XX)

SERVICE RACK
(SEE ELECTRICAL SHEET XX)

ELECTRICAL PLATFORM
(SEE ELECTRICAL SHEET XX)

COMM/PPU PANEL
(SEE ELECTRICAL SHEET XX)

CONTROL PANEL
(SEE ELECTRICAL SHEET XX)

ELECTRICAL PLATFORM
(SEE ELECTRICAL SHEET XX)

TSARP CONVERSION REFERENCE MONUMENT

CITY OF HOUSTON MONUMENT 5670-8206 IS AN ALUMINUM DISK ON TOP OF INLET LOCATED ON LOOP 494 APPROXIMATELY 700 FEET SOUTH FROM THE INTERSECTION OF NORTH PARK PLAZA.

PROJECT SITE MONUMENT

ELEV. 81.29 FEET NAVD 1988, 2001 ADJUSTMENT (PROJECT DATUM)
ELEV. 81.00 FEET NAVD 1988, (GEOID '18)*

*OBSERVED BY GPS SURVEYING AND PROCESSED IN REFERENCE TO THE CORS DATED OCTOBER 17, 2025.

TBM
B-23: SET "X" CUT ON CONC,
ELEV:79.20'
B-24: SET "X" CUT ON CONC,
ELEV:78.56'
B-25: SET "X" CUT ON CONC,
ELEV:78.77'
B-26: SET "X" CUT ON CONC,
ELEV:77.80'

RPS
A TETRA TECH COMPANY
Texas PE Firm Reg. #F-929
575 N. Dairy Ashford, Suite 700,
Houston, Texas 77079
T +1 281 589 7257
E usinfrastructure@rpsgroup.com

SURVEYED BY: KUO Inc.
FB NO. F-4578

This document is released for the purposes of interim review only under the authority of:

Neha Raval, P.E.
Texas P.E. No. 141506
03/30/2026

It is not to be used for bidding, construction, or permitting purposes.

CITY OF HOUSTON
HOUSTON PUBLIC WORKS

RECONSTRUCTION & REHABILITATION
COH LIFT STATIONS

PROPOSED GRADING -
MCMUD58 LS
MC58-C-3

WBS NUMBER	FOR CITY OF HOUSTON USE ONLY
R-000267-0178-3	
DRAWING SCALE	
AS NOTED	
CITY OF HOUSTON PM	
TAHA LOTIA	
SHEET NO. 152 OF 268	

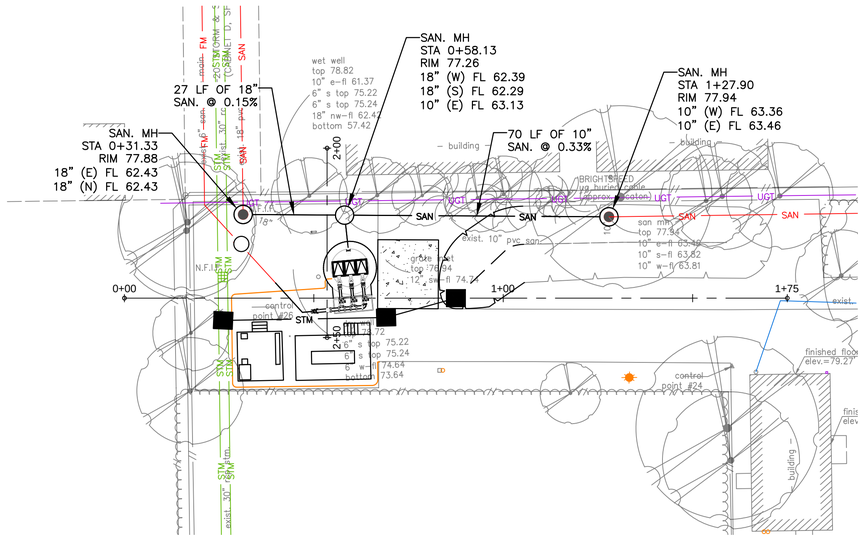
SAN. MH
STA 0+58.13
RIM 77.26
18" (W) FL 62.39
18" (S) FL 62.29
10" (E) FL 63.13
SAN. MH
STA 1+27.90
RIM 77.94
10" (W) FL 63.36
10" (E) FL 63.46
SAN. MH
STA 0+31.33
RIM 77.88
18" (E) FL 62.43
18" (N) FL 62.43
27 LF OF 18"
SAN. @ 0.15%
70 LF OF 10"
SAN. @ 0.33%
wet well
top 78.82
10" e-fl 61.37
6" s top 75.22
18" nw-fl 62.42
bottom 57.42
exist. 10" pvc san
exist. 30" pvc storm
exist. 18" pvc storm
exist. 24" pvc storm
exist. 10" pvc storm
exist. 8" pvc storm
exist. 6" pvc storm
exist. 12" pvc storm
exist. 8" pvc san
exist. 6" pvc san
exist. 10" pvc san
exist. 8" pvc water
exist. 6" pvc water
exist. 12" pvc water
exist. 16" pvc water
exist. 20" pvc water
exist. 24" pvc water
exist. 30" pvc water
exist. 36" pvc water
exist. 42" pvc water
exist. 48" pvc water
exist. 54" pvc water
exist. 60" pvc water
exist. 66" pvc water
exist. 72" pvc water
exist. 78" pvc water
exist.

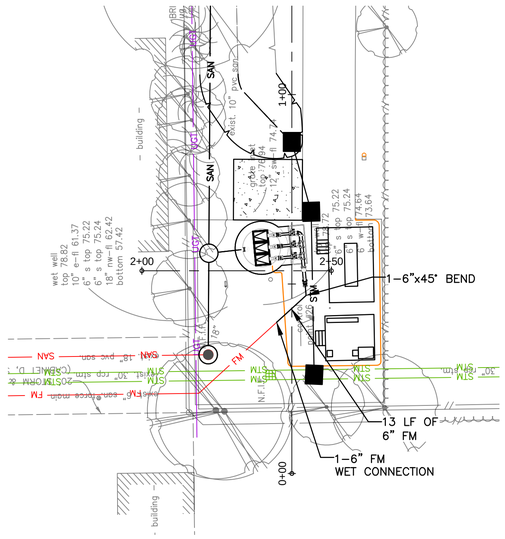

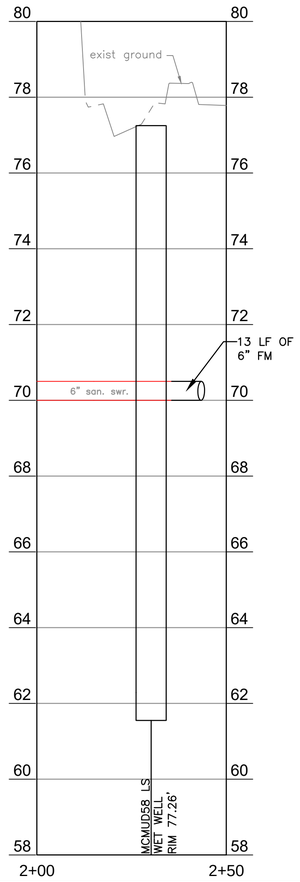

N

0' 10' 20' 40'
H SCALE: 1"=20'

0' 1' 2' 4'
V SCALE: 1"=2'

RPS
A TETRA TECH COMPANY
Texas PE Firm Reg. #F-929
575 N. Dairy Ashford, Suite 700,
Houston, Texas 77079
T +1 281 589 7257
E usinfrastructure@rpsgroup.com

SURVEYED BY: KUO Inc.
FB NO. F-4578

This document is released for the purposes of interim review only under the authority of:

Neha Raval, P.E.
Texas P.E. No. 141506
03/30/2026

It is not to be used for bidding, construction, or permitting purposes.

CITY OF HOUSTON
HOUSTON PUBLIC WORKS

RECONSTRUCTION & REHABILITATION
COH LIFT STATIONS

PLAN & PROFILE –
FORCE MAIN – MCMUD58
MC58-C-5

WBS NUMBER	FOR CITY OF HOUSTON USE ONLY
R-000267-0178-3	
DRAWING SCALE	
AS NOTED	
CITY OF HOUSTON PM	
TAHA LOTIA	
SHEET NO. 154 OF 268	

PLOTTED: 3/30/2026 5:01 PM
PLOT STYLE: Coh_ctb_230809.ctb
FILE NAME: PLAN & PROFILE – MCMUD58 LS.dwg

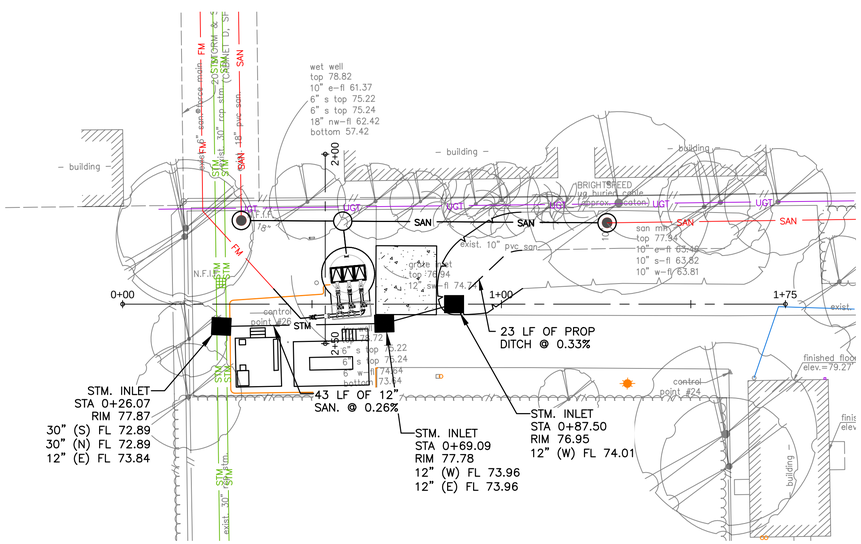

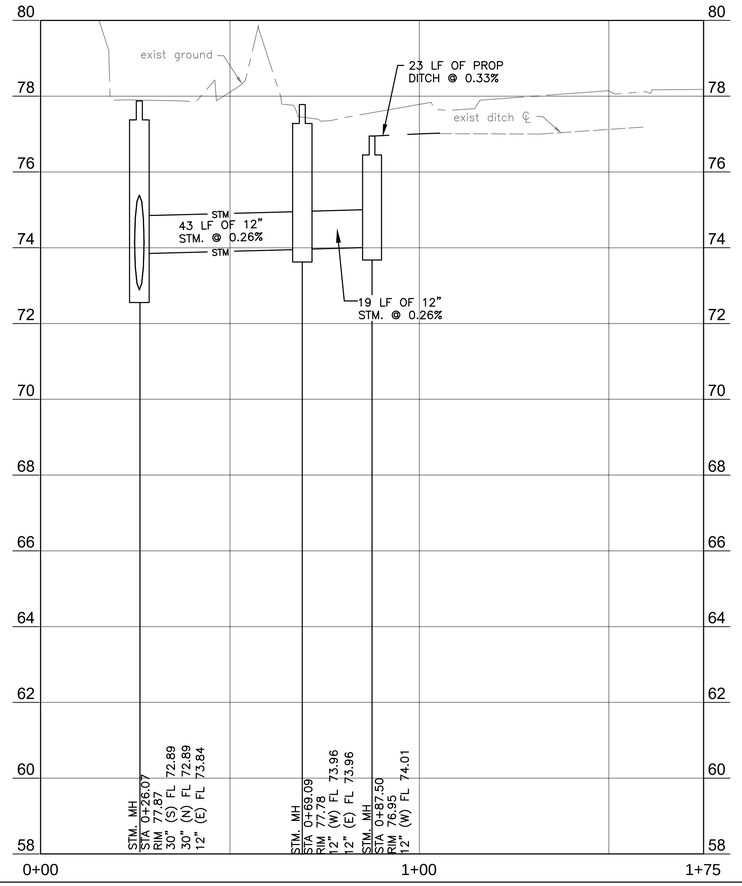

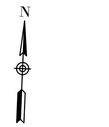

RPS
A TETRA TECH COMPANY
Texas PE Firm Reg. #F-929
575 N. Dairy Ashford, Suite 700,
Houston, Texas 77079
T +1 281 589 7257
E usinfrastructure@rpsgroup.com

SURVEYED BY: KUO Inc.
FB NO. F-4578

This document is released for the purposes of interim review only under the authority of:

Neha Raval, P.E.
Texas P.E. No. 141506
03/30/2026

It is not to be used for bidding, construction, or permitting purposes.

CITY OF HOUSTON
HOUSTON PUBLIC WORKS

RECONSTRUCTION & REHABILITATION
COH LIFT STATIONS

PLAN & PROFILE –
STORM – MCMUD58
MC58–C–6

WBS NUMBER	FOR CITY OF HOUSTON USE ONLY
R–000267–0178–3	
DRAWING SCALE	
AS NOTED	
CITY OF HOUSTON PM	
TAHA LOTIA	
SHEET NO. 155 OF 268	

PLOTTED: 3/30/2026 5:01 PM
PLOT STYLE: Coh_ctb_230809.ctb
FILE NAME: PLAN & PROFILE – MCMUD58 LS.dwg

PLOTTED: 3/30/2026 5:01 PM

PLOT STYLE: Con_ctb_230809.ctb

FILE NAME: SWPPP – MCMUD58 LS.dwg

N

0' 5' 10' 20'

SCALE: 1"=10'

exist. 6" san. force main

exist. 30" rcp stm.

exist. 18" pvc san.

BRIGHTSPEED ug buried cable (approx. location)

exist. 10" pvc san.

exist. 3" waterline

12" rcp stm.

18"

10"

bldg

CTW

control point #421

control point #422

control point #423

control point #424

control point #25

control point #26

control point #23

M-1

LEGEND

x — RFB — x	REINFORCED FILTER FABRIC BARRIER
IPB	INLET PROTECTION BARRIER
SCA	STABILIZED CONSTRUCTION ACCESS
CTW	CONCRETE TRUCK WASHOUT AREA

A TETRA TECH COMPANY

Texas PE Firm Reg. #F-929

575 N. Dairy Ashford, Suite 700,
Houston, Texas 77079
T +1 281 589 7257
E usinfrastructure@rpsgroup.com

This document is released for the purposes of interim review only under the authority of:

Neha Raval, P.E.
Texas P.E. No. 141506
03/30/2026

It is not to be used for bidding, construction, or permitting purposes.

SURVEYED BY: KUO Inc.
FB NO. F-4578

CITY OF HOUSTON

HOUSTON PUBLIC WORKS

RECONSTRUCTION & REHABILITATION
COH LIFT STATIONS

SWPPP – MCMUD58 LS
MC58-C-7

WBS NUMBER	FOR CITY OF HOUSTON USE ONLY
R-000267-0178-3	
DRAWING SCALE	
AS NOTED	
CITY OF HOUSTON PM	
TAHA LOTIA	
SHEET NO. 156 OF 268	

PLOTTED: 3/30/2026 5:01 PM

PLOT STYLE: Coh_ctb_230809.ctb

FILE NAME: TCP_MCMUD58.dwg

N

0' 10' 20' 40'

SCALE: 1"=20'

COH STD. DTL
DWG NO: 01555-05
DETAIL SHEET 32

LOOP 494

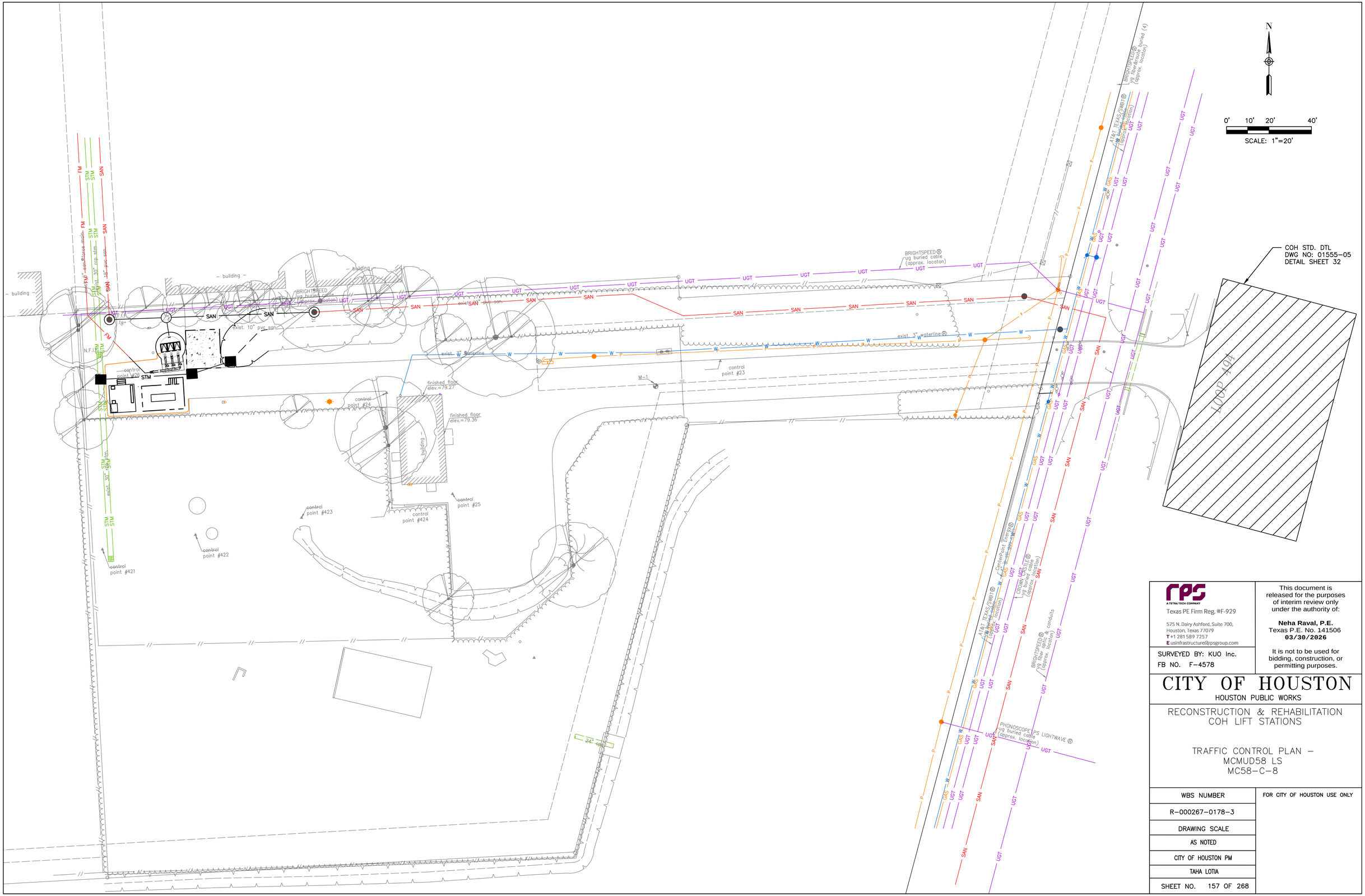

RPS
A TETRA TECH COMPANY
Texas PE Firm Reg. #F-929
575 N. Dairy Ashford, Suite 700,
Houston, Texas 77079
T +1 281 589 7257
E usinfrastructure@rpsgroup.com

SURVEYED BY: KUO Inc.
FB NO. F-4578

This document is released for the purposes of interim review only under the authority of:

Neha Raval, P.E.
Texas P.E. No. 141506
03/30/2026

It is not to be used for bidding, construction, or permitting purposes.

CITY OF HOUSTON

HOUSTON PUBLIC WORKS

RECONSTRUCTION & REHABILITATION COH LIFT STATIONS

TRAFFIC CONTROL PLAN – MCMUD58 LS MC58-C-8

WBS NUMBER	FOR CITY OF HOUSTON USE ONLY
R-000267-0178-3	
DRAWING SCALE	
AS NOTED	
CITY OF HOUSTON PM	
TAHA LOTIA	
SHEET NO. 157 OF 268	

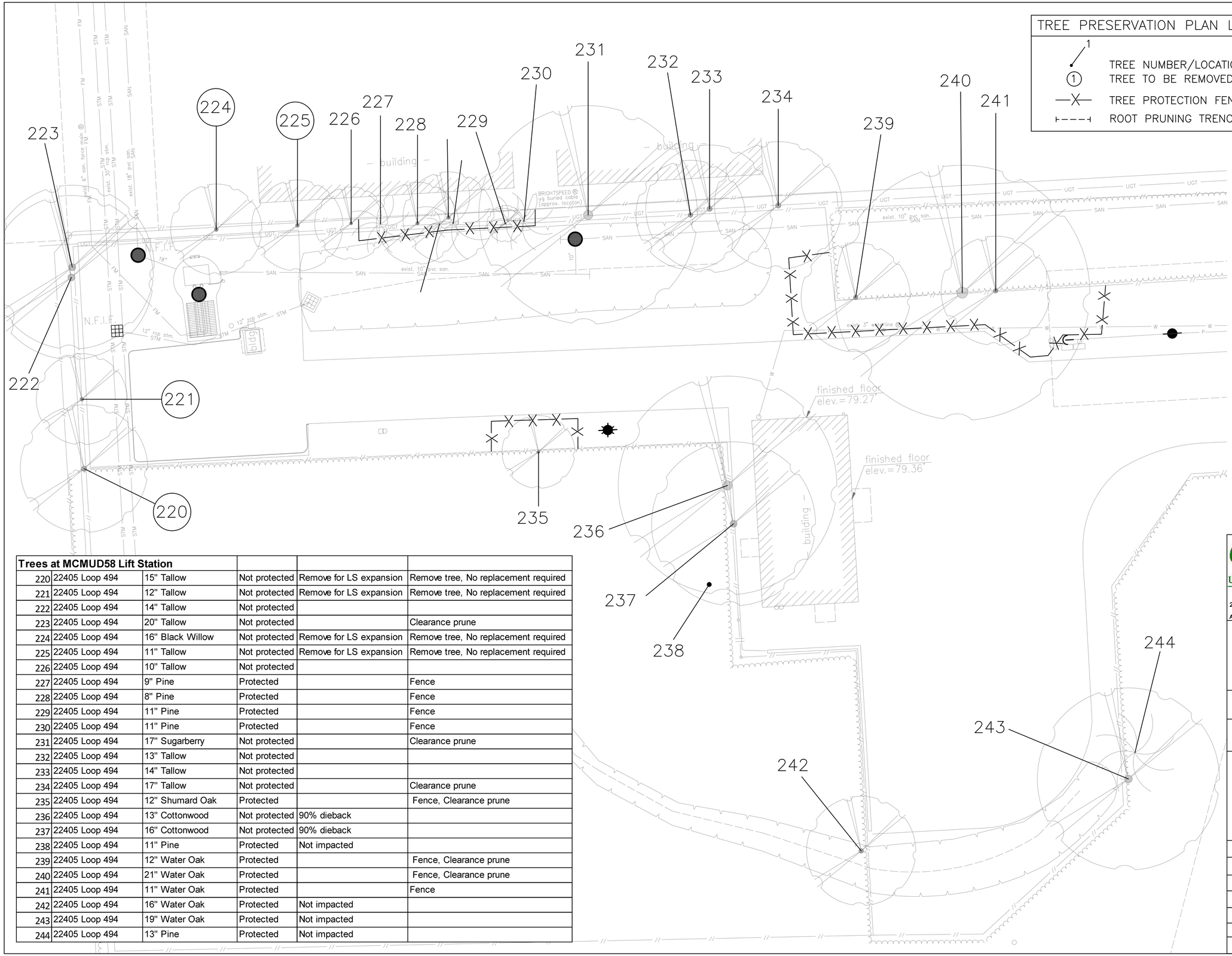

NOTE:

1. THIS TREE PROTECTION PLAN WAS DEVELOPED WITH INFORMATION PROVIDED BY DESIGN ENGINEER IN DRAWINGS DATED MARCH 2026. THE PLAN CONSIDERS ALL FITTINGS, VERTICAL OFFSETS AND AREAS OF NECESSARY EXCAVATION. CHANGES MADE TO DESIGN MAY COMPROMISE THE TREE PROTECTION PLAN. REFER SPECIFICATIONS 01562 AND 02915.
2. CN KOEHL URBAN FORESTRY, INC. HAS NOT BEEN CONTRACTED TO COMPLETE ANY TREE RISK ASSESSMENTS ON THIS PROJECT–THIS TPP INCLUDES PROTECTION MEASURES FOR SPECIES OF TREES PROTECTED BY APPLICABLE ORDINANCE ONLY. CN KOEHL URBAN FORESTRY, INC. DOES NOT GUARANTEE CONDITION OR STRUCTURAL INTEGRITY OF ANY TREE LOCATED ON OR ADJACENT TO THIS PROJECT.
3. IN AREAS WHERE INDIVIDUAL TREES HAVE NOT BEEN TIED IN BY SURVEY, APPROXIMATE LOCATION IS INDICATED ON TPP WITH A DOT AND TREE NUMBER. ACCURACY OF REPRESENTED LOCATION IS NOT GUARANTEED BY CN KOEHL URBAN FORESTRY, INC.

Trees at MCMUD58 Lift Station					
220	22405 Loop 494	15" Tallow	Not protected	Remove for LS expansion	Remove tree, No replacement required
221	22405 Loop 494	12" Tallow	Not protected	Remove for LS expansion	Remove tree, No replacement required
222	22405 Loop 494	14" Tallow	Not protected		
223	22405 Loop 494	20" Tallow	Not protected		Clearance prune
224	22405 Loop 494	16" Black Willow	Not protected	Remove for LS expansion	Remove tree, No replacement required
225	22405 Loop 494	11" Tallow	Not protected	Remove for LS expansion	Remove tree, No replacement required
226	22405 Loop 494	10" Tallow	Not protected		
227	22405 Loop 494	9" Pine	Protected		Fence
228	22405 Loop 494	8" Pine	Protected		Fence
229	22405 Loop 494	11" Pine	Protected		Fence
230	22405 Loop 494	11" Pine	Protected		Fence
231	22405 Loop 494	17" Sugarberry	Not protected		Clearance prune
232	22405 Loop 494	13" Tallow	Not protected		
233	22405 Loop 494	14" Tallow	Not protected		
234	22405 Loop 494	17" Tallow	Not protected		Clearance prune
235	22405 Loop 494	12" Shumard Oak	Protected		Fence, Clearance prune
236	22405 Loop 494	13" Cottonwood	Not protected	90% dieback	
237	22405 Loop 494	16" Cottonwood	Not protected	90% dieback	
238	22405 Loop 494	11" Pine	Protected	Not impacted	
239	22405 Loop 494	12" Water Oak	Protected		Fence, Clearance prune
240	22405 Loop 494	21" Water Oak	Protected		Fence, Clearance prune
241	22405 Loop 494	11" Water Oak	Protected		Fence
242	22405 Loop 494	16" Water Oak	Protected	Not impacted	
243	22405 Loop 494	19" Water Oak	Protected	Not impacted	
244	22405 Loop 494	13" Pine	Protected	Not impacted	

C.N. Koehl
Urban Forestry, Inc.
210 Stone Bush Ct. ◦ Katy, Texas 77493
281–391–0022 ckoehl@koehlurbanforestry.com

APPROVED:

TETRA TECH
Texas PE Firm Reg. #F-929
575 N. Dairy Ashford, Suite 700, Houston, Texas 77079
T +1 281 589 7257
E usinfrastructure@rpsgroup.com

SURVEYED BY: KUO Inc.
FB NO. F–4578

CITY OF HOUSTON
HOUSTON PUBLIC WORKS

RECONSTRUCTION & REHABILITATION
COH LIFT STATIONS

TREE PROTECTION PLAN
– MCMUD#58 LS
MC58–C–9

SHEET 3 OF 6

WBS NUMBER	FOR CITY OF HOUSTON USE ONLY
R–000267–0178–3	
DRAWING SCALE	
AS NOTED	
CITY OF HOUSTON PM	
TAHA LOTIA	
SHEET NO. 158 OF 268	

PLOTTED: 3/25/2026 11:29 AM
PLOT STYLE: CNKoehl.ctb
FILE PATH: C:\Users\Ned\Desktop\UPCOMING PROJECTS\TETRATECH COH LS REHAB\03 PROPOSED TPP – MCMUD58 LS.dwg

PLOTTED: 3/27/2026 9:39:29 AM
PLOT STYLE:
Autodesk Docs://200-317106-24001 COH LS Rehab Design/M-LIFT STATIONS-200-317106-24001_v25.rvt

KEYNOTE

1 PROVIDE PASSIVE GOOSENECK VENT FOR LIFT STATION WET WELL. COORDINATE WITH STRUCTURAL FOR PIPE PENETRATION THROUGH SIDEWALL OF WET WELL PER MECHANICAL DETAILS. ENSURE VENT LOCATION DOES NOT CLASH WITH ACCESS HATCH OPENING. VENT PIPE IS TO BE OF CORROSIVE RESISTANT CONSTRUCTION. PROVIDE REPLACEABLE STAINLESS STEEL INSECT SCREEN OVER VENT INLET/OUTLET.

NO	DATE	REVISION	APP.

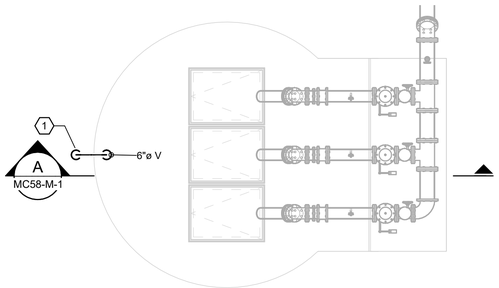

M.C.M.U.D. #58 LIFT STATION MECHANICAL PLAN
SCALE: 1/4" = 1'-0"

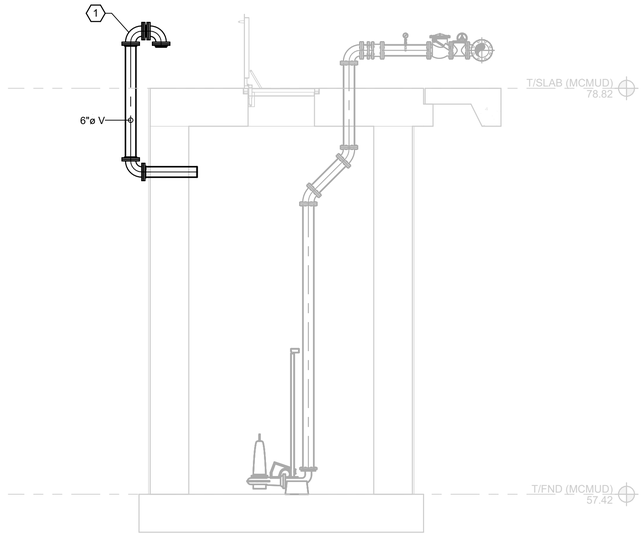

A MC58-M-1 M.C.M.U.D. #58 LIFT STATION MECHANICAL SECTION
SCALE: 1/4" = 1'-0"

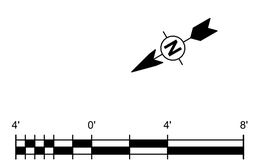

SCALE: 1/4" = 1'-0"

rps A TETRA TECH COMPANY
Texas PE Firm Reg. #F-929
575 N. Dairy Ashford, Suite 700,
Houston, Texas 77079
T +1 281 589 7257
E usinfrastructure@rpsgroup.com

SURVEYED BY: KUO INC.
FB NO. F-4578

This document is released for the purposes of interim review only under the authority of:

Luke Ramirez, P.E.
Texas P.E. No. 128371
2/16/26

It is not to be used for bidding, construction, or permitting purposes.

CITY OF HOUSTON

HOUSTON PUBLIC WORKS

RECONSTRUCTION & REHABILITATION
COH LIFT STATIONS

M.C.M.U.D. #58 LS MECHANICAL PLAN AND SECTION

MC58-M-1

WBS NUMBER	FOR CITY OF HOUSTON USE ONLY
R-000267-0178-3	
DRAWING SCALE	
AS NOTED	
CITY OF HOUSTON PM	
TAHA LOTIA	
SHEET NO. 159 OF 268	

PLOTTED: 3/27/2026 9:39:47 AM
PLOT STYLE:
Autodesk Docs://200-317106-24001 COH LS Rehab Design/M-LIFT STATIONS-200-317106-24001_v25.rvt

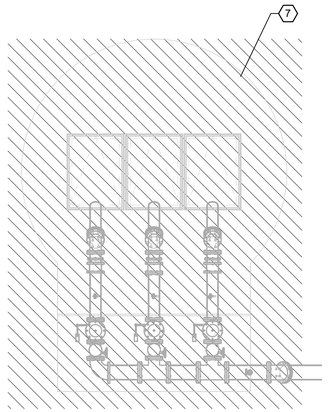

M.C.M.U.D. #58 LIFT STATION PLUMBING DEMOLITION PLAN

SCALE: 1/4" = 1'-0"



1 MC58-P-1 BACKFLOW PREVENTER DEMOLITION PHOTO

SCALE: N.T.S.

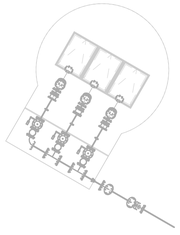

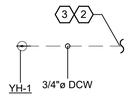

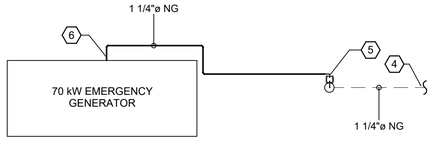

M.C.M.U.D. #58 LIFT STATION PLUMBING NEW WORK PLAN

SCALE: 1/8" = 1'-0"

KEYNOTE

#	
1	DEMOLISH AND REMOVE ABOVE GRADE BACKFLOW PREVENTER ASSEMBLY AND ALL ASSOCIATED ACCESSORIES AND SUPPORTS. DEMOLISH AND REMOVE DOMESTIC COLD WATER PIPING AND INSULATION DOWN TO BELOW GRADE. EXISTING BELOW GRADE PIPING TO REMAIN. REFER TO CIVIL DRAWINGS FOR DOMESTIC COLD WATER YARD PIPING CONTINUATION.
2	ROUTE DOMESTIC COLD WATER PIPING TO TIE IN POINT NEAR BLOWER BUILDING. REFER TO CIVIL PLANS FOR YARD PIPING CONTINUATION AND FINAL CONNECTION LOCATION.
3	PROVIDE NEW ABOVE GRADE BACKFLOW PREVENTER BFP-3 IN SAME LOCATION AS PREVIOUS. PROVIDE TRANSITIONS AND OFFSETS AS NECESSARY TO CONNECT TO EXISTING DOMESTIC COLD WATER PIPING BELOW GRADE. REFER TO TYPICAL PLUMBING DETAIL AND PLUMBING SCHEDULES.
4	REFER TO CIVIL PLANS FOR YARD PIPING CONTINUATION.
5	PROVIDE NATURAL GAS SERVICE PIPING TO LIFT STATION SITE. COORDINATE WITH LOCAL UTILITY FOR NATURAL GAS SERVICE CONNECTION TO MAIN. CONTRACTOR TO COORDINATE WITH LOCAL UTILITY TO PROVIDE NEW NATURAL GAS METER AND PRESSURE REDUCING VALVE FOR SERVICE.
6	REFER TO ELECTRICAL DRAWINGS AND GENERATOR MANUFACTURER SPECIFICATIONS FOR FINAL NATURAL GAS PIPING CONNECTION LOCATION. PROVIDE SHUT OFF VALVE FOR ISOLATION AND FLEXIBLE CONNECTION AT GENERATOR.
7	LIFT STATION TO BE DEMOLISHED IN ITS ENTIRETY. REFER TO STRUCTURAL DRAWINGS.

NO	DATE	REVISION	APP.

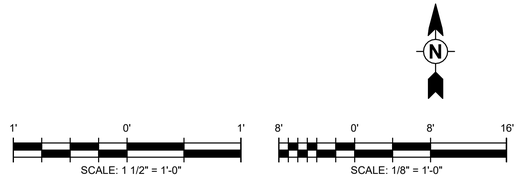

rps
A TETRA TECH COMPANY
Texas PE Firm Reg. #F-929
575 N. Dairy Ashford, Suite 700,
Houston, Texas 77079
T +1 281 589 7257
E usinfrastructure@rpsgroup.com

SURVEYED BY: KUO INC.
FB NO. F-4578

This document is released for the purposes of interim review only under the authority of:

Luke Ramirez, P.E.
Texas P.E. No. 128371
2/16/26

It is not to be used for bidding, construction, or permitting purposes.

CITY OF HOUSTON

HOUSTON PUBLIC WORKS

RECONSTRUCTION & REHABILITATION
COH LIFT STATIONS

M.C.M.U.D. #58 LS PLUMBING PLANS

MC58-P-1

WBS NUMBER	FOR CITY OF HOUSTON USE ONLY
R-000267-0178-3	
DRAWING SCALE	
AS NOTED	
CITY OF HOUSTON PM	
TAHA LOTIA	
SHEET NO. 160 OF 268	

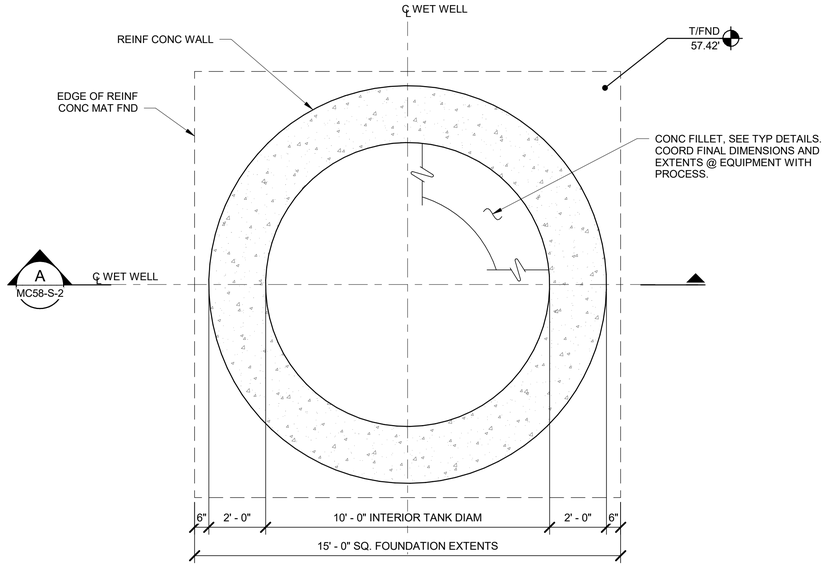

M.C.M.U.D. #58 FND PLAN

SCALE: 3/8" = 1'-0"

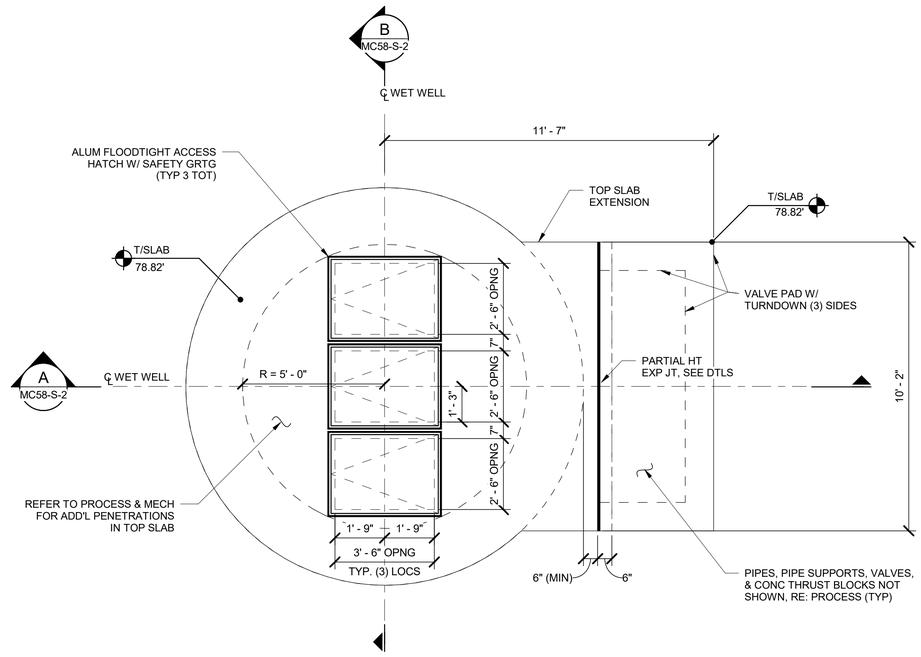

M.C.M.U.D. #58 TOP SLAB PLAN

SCALE: 3/8" = 1'-0"

PLAN NOTES:

1. SEE SHEETS S-1 THROUGH S-2 FOR GENERAL NOTES AND DESIGN CRITERIA.
2. REFER TO CIVIL FOR STRUCTURE LOCATION, FINAL ELEVATIONS, AND ORIENTATION ON SITE.
3. COORDINATE ALL PIPE LOCATIONS, PENETRATIONS, AND ELEVATIONS WITH PROCESS, MECHANICAL, AND CIVIL DRAWINGS.
4. PROVIDE ADDITIONAL REINFORCEMENT AROUND CONCRETE OPENINGS PER TYPICAL DETAIL 1 / STD-S-1 .
5. ALUMINUM ACCESS HATCHES SHALL BE FLOODTIGHT, RATED FOR 625 PSF MINIMUM UNIFORM LIVE LOAD (10 FT HEAD OF WATER), AND INCLUDE SAFETY GRATING. CONTRACTOR SHALL CONFIRM SIZE AND LOCATION OF ACCESS HATCH OPENINGS ACCORDING TO THE SELECTED HATCH AND PUMP MANUFACTURERS' REQUIREMENTS. REFER TO SPEC "08310 - ACCESS HATCHES" FOR ADDITIONAL REQUIREMENTS.
6. WALLS MAY BE BACKFILLED AND LEAK TEST PERFORMED PRIOR TO CONSTRUCTION OF TOP SLAB.

NO.	DATE	REVISION	APP.

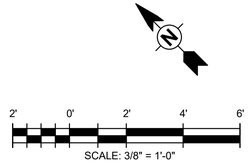

A TETRA TECH COMPANY
Texas PE Firm Reg. #F-929
575 N. Dairy Ashford, Suite 700,
Houston, Texas 77079
T +1 281 589 7257
E usinfrastructure@rpsgroup.com

SURVEYED BY: KUO Inc.
FB NO. F-4578

This document is released for the purposes of interim review only under the authority of:

Phillip A. Fleming, P.E.
Texas P.E. No. 131982
2/10/26

It is not to be used for bidding, construction, or permitting purposes.

CITY OF HOUSTON

HOUSTON PUBLIC WORKS

RECONSTRUCTION & REHABILITATION
COH LIFT STATIONS

M.C.M.U.D. #58 LS STRUCTURAL PLANS

MC58-S-1

WBS NUMBER	FOR CITY OF HOUSTON USE ONLY
R-000267-0178-3	
DRAWING SCALE	
AS NOTED	
CITY OF HOUSTON PM	
TAHA LOTIA	
SHEET NO. 161 OF 268	

PLOTTED 3/30/2026 10:01:22 AM
PLOT STYLE:
Autodesk Docs://200-317106-24001 COH LS Rehab Design/S-LIFT STATIONS-200-317106-24001_v25.rvt

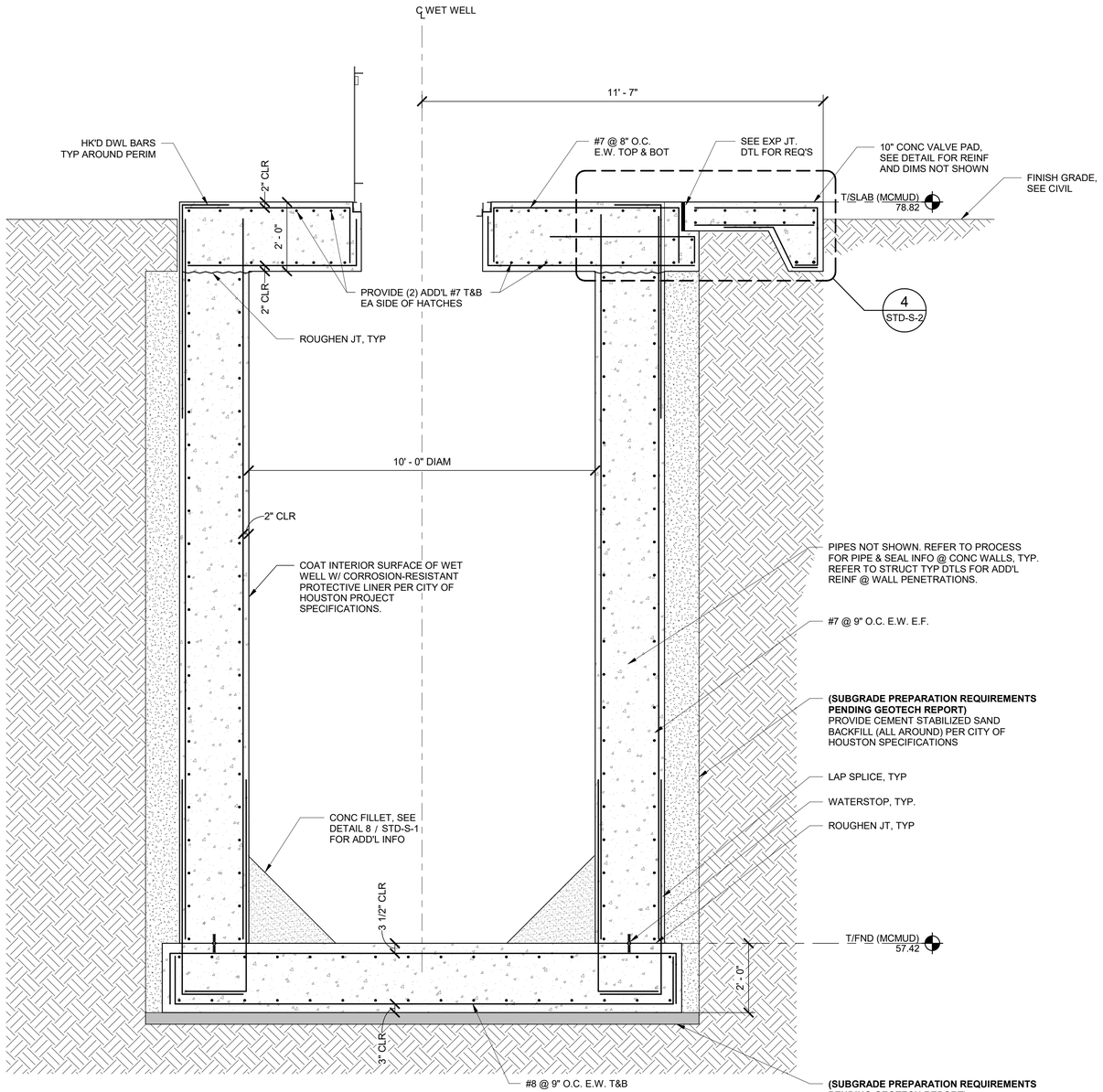

A SECTION
MC58-S-2 SCALE: 1/2" = 1'-0"

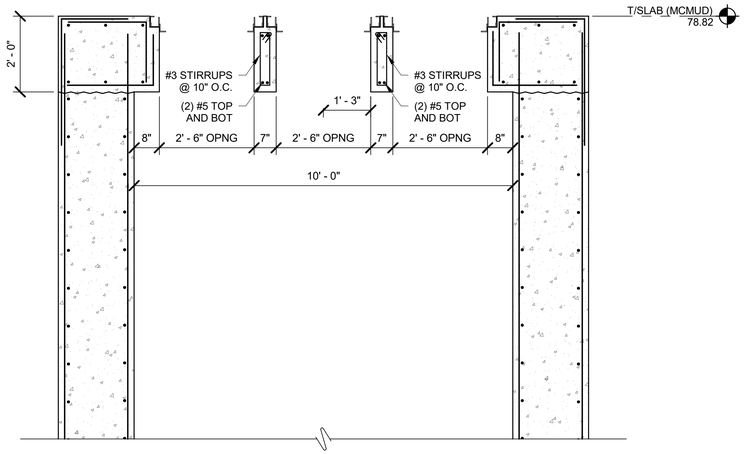

B SECTION
MC58-S-2 SCALE: 1/2" = 1'-0"

2' 0' 2' 4' 6'
SCALE: 3/8" = 1'-0"

NO.	DATE	REVISION	APP.

RPS A TETRA TECH COMPANY
Texas PE Firm Reg. #F-929
575 N. Dairy Ashford, Suite 700,
Houston, Texas 77079
T +1 281 589 7257
E usinfrastructure@rpsgroup.com

SURVEYED BY: KUO Inc.
FB NO. F-4578

This document is released for the purposes of interim review only under the authority of:

Phillip A. Fleming, P.E.
Texas P.E. No. 131982
2/10/26

It is not to be used for bidding, construction, or permitting purposes.

CITY OF HOUSTON
HOUSTON PUBLIC WORKS

RECONSTRUCTION & REHABILITATION
COH LIFT STATIONS

M.C.M.U.D. #58 LS STRUCTURAL SECTIONS

MC58-S-2

WBS NUMBER	FOR CITY OF HOUSTON USE ONLY
R-000267-0178-3	
DRAWING SCALE	
AS NOTED	
CITY OF HOUSTON PM	
TAHA LOTIA	
SHEET NO. 162 OF 268	

PLOTTED 3/30/2026 10:01:22 AM
PLOT STYLE:
Autodesk Docs://200-317106-24001 COH LS Rehab Design/S-LIFT STATIONS-200-317106-24001_v25.rvt

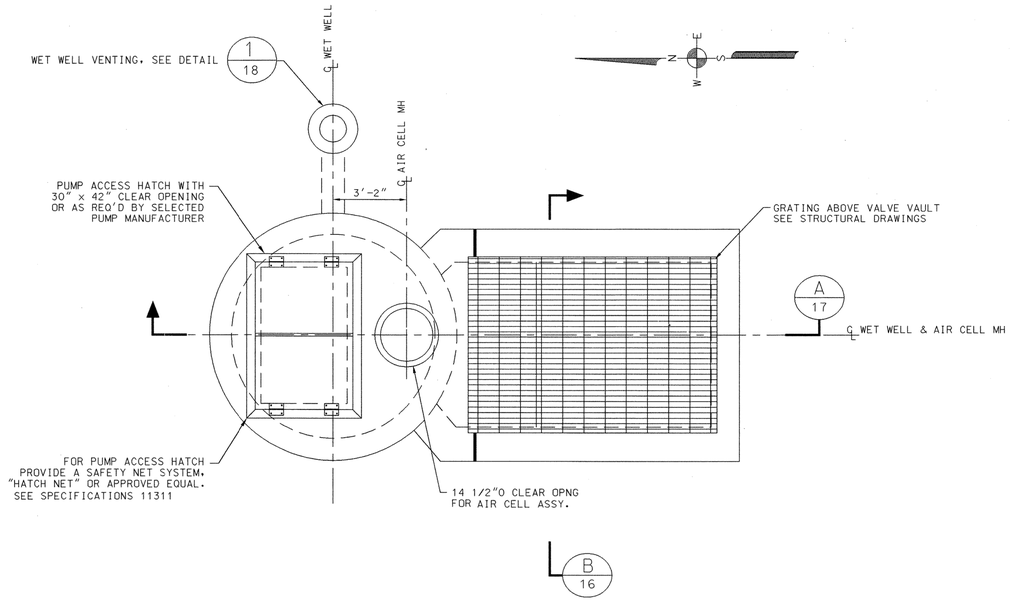

PLAN VIEW @ GRADE

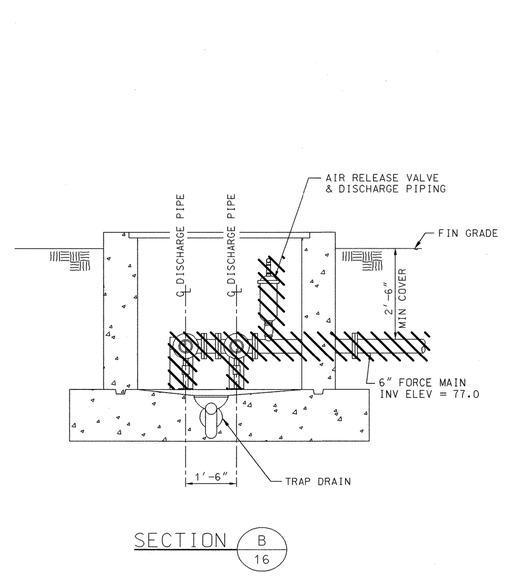

SECTION B 16

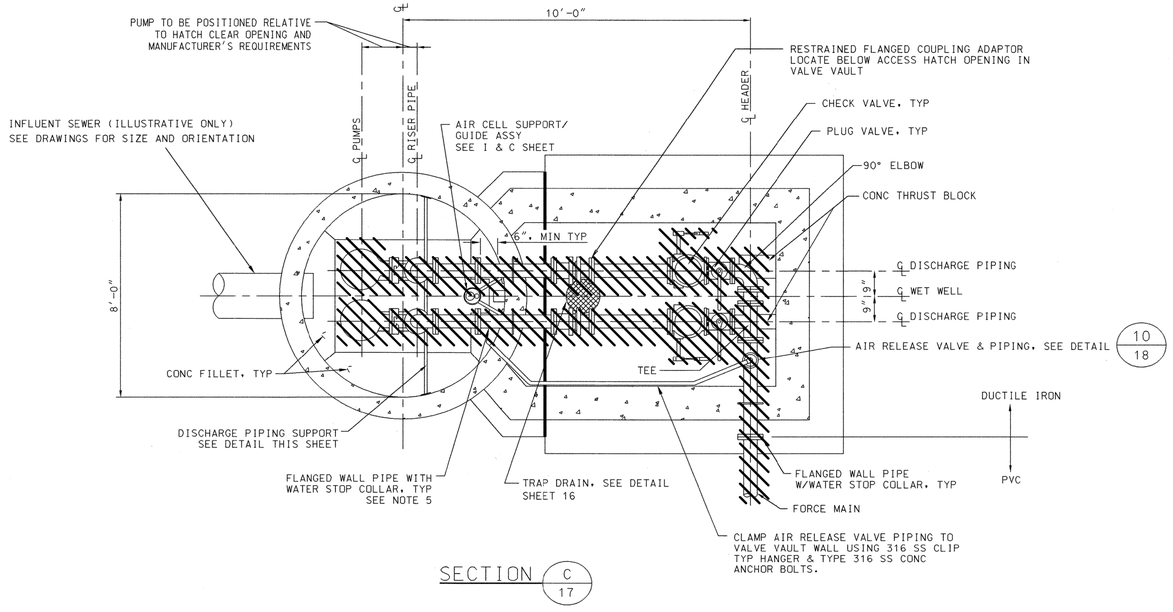

SECTION C 17

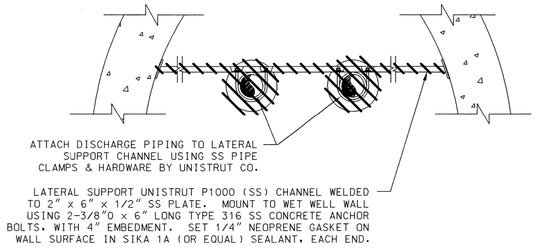

DISCHARGE PIPING SUPPORT DETAIL

-ITEMS TO BE REMOVED

DEMOLITION NOTES:
1. CONTRACTORS TO REMOVE AND SALVAGE ALL EXISTING PUMPS, VALVES, AND APPURTENANCES.
2. WHEN EQUIPMENT ITEMS ARE INDICATED FOR REMOVAL, ALL ANCILLARY UTILITIES, ELECTRICAL ITEMS, AND SUPPORTS SHALL BE COMPLETELY REMOVED UNLESS OTHERWISE INDICATED.

NO.	DATE	REVISION	APP.

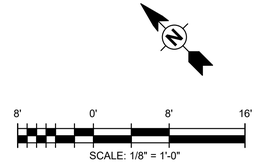

RPS A TETRA TECH COMPANY
Texas PE Firm Reg. #F-929
575 N. Dairy Ashford, Suite 700, Houston, Texas 77079
T +1 281 589 7257
E usinfrastructure@rpsgroup.com

SURVEYED BY: KUCO INC.
FB NO. F-4578

This document is released for the purposes of interim review only under the authority of:
Jeremy Austin, P.E.
Texas P.E. No. 116816
03/30/2026
It is not to be used for bidding, construction, or permitting purposes.

CITY OF HOUSTON
HOUSTON PUBLIC WORKS

RECONSTRUCTION & REHABILITATION
COH LIFT STATIONS

M.C.M.U.D. #58 LS DEMOLITION PLAN

MC58-D-1

WBS NUMBER	FOR CITY OF HOUSTON USE ONLY
R-000267-00178-3	
DRAWING SCALE	
AS NOTED	
CITY OF HOUSTON PM	
TAHA LOTIA	
SHEET NO. 163 OF 268	

PLOTTED: 3/27/2026 1:02:40 PM
PLOT STYLE:
Autodesk Docs://200-317106-24001 COH LS Rehab Design/D-LIFT STATIONS-200-317106-24001_v25.rvt

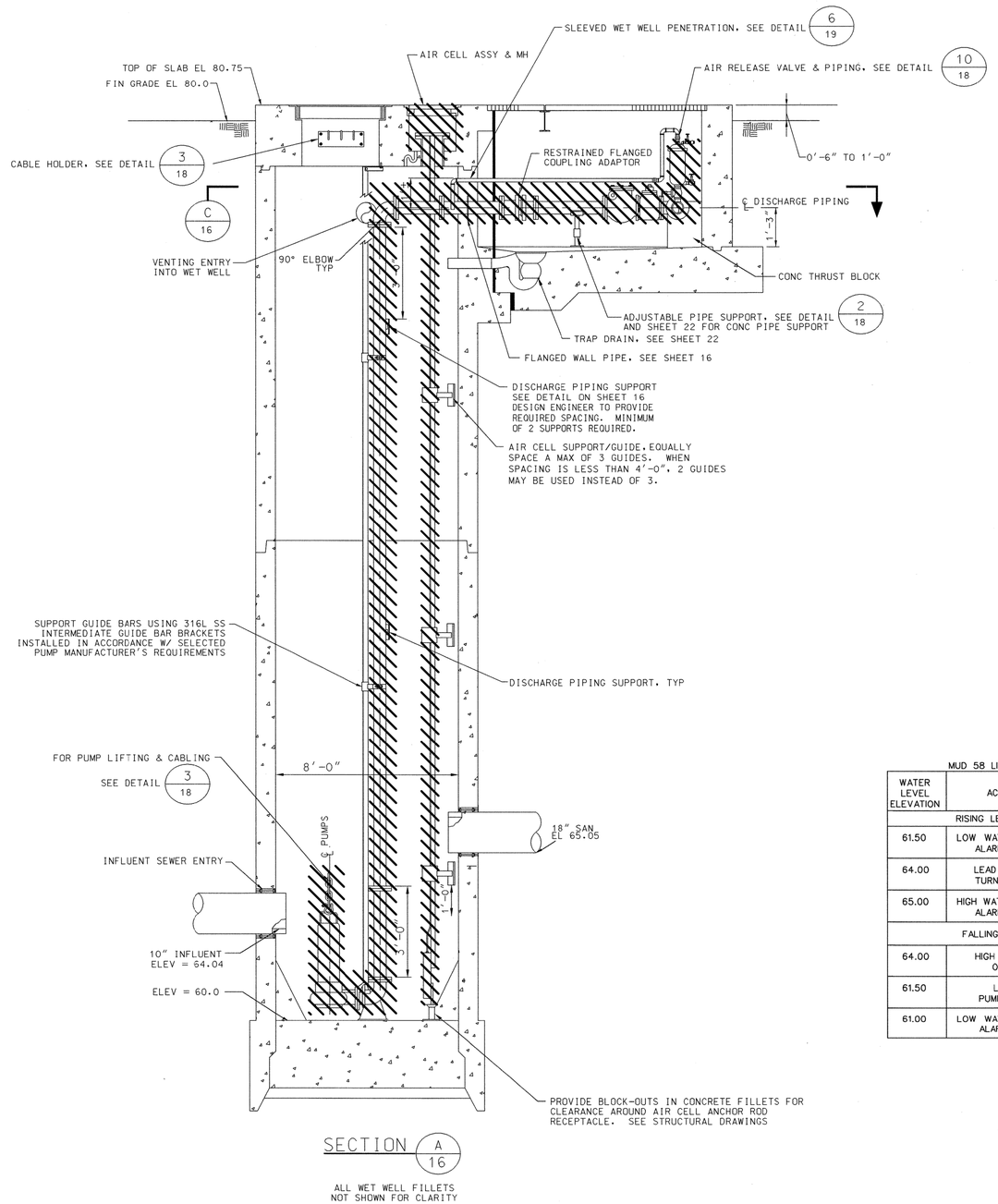

SECTION A/16

ALL WET WELL FILLETS NOT SHOWN FOR CLARITY

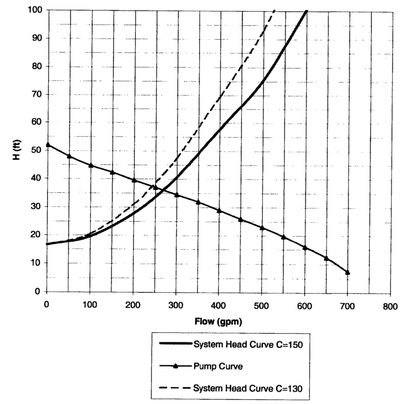

MUD 58 LIFT STATION

WATER LEVEL ELEVATION	ACTION	PUMPS IN OPERATION
RISING LEVEL CYCLE		
61.50	LOW WATER LEVEL ALARM OFF	ALL PUMPS OFF
64.00	LEAD PUMP TURNS ON	LEAD PUMP ON
65.00	HIGH WATER LEVEL ALARM ON	ALL PUMPS ON ALARM SOUNDS
FALLING LEVEL CYCLE		
64.00	HIGH ALARM OFF	PUMP 2 OFF
61.50	LEAD PUMP OFF	ALL PUMPS OFF
61.00	LOW WATER LEVEL ALARM ON	LOW WATER ALARM SOUNDS

PUMP DATA TABLE

PUMP CHARACTERISTICS	PUMP NO. 1	PUMP NO. 2
MOTOR DATA NOMINAL SIZE (HP) MAX SPEED (RPM)	 10 1700	 10 1700
SOLIDS PASSAGE MIN SPHERE (IN)	 3	 3
CAPACITY (GPM) DESIGN RUNOUT	 270 700	 270 700
DISCHARGE HEAD (FT) DESIGN RUNOUT SHUT OFF	 36 7.5 52	 36 7.5 52
EFFICIENCY (%) DESIGN	 63%	 63%
NPSHR (FT) DESIGN RUNOUT	 24 14	 24 14

-ITEMS TO BE REMOVED

DEMOLITION NOTES:
1. CONTRACTORS TO REMOVE AND SALVAGE ALL EXISTING PUMPS, VALVES, AND APPURTENANCES.
2. WHEN EQUIPMENT ITEMS ARE INDICATED FOR REMOVAL, ALL ANCILLARY UTILITIES, ELECTRICAL ITEMS, AND SUPPORTS SHALL BE COMPLETELY REMOVED UNLESS OTHERWISE INDICATED.

8' 0' 8' 16'

SCALE: 1/8" = 1'-0"

NO.	DATE	REVISION	APP.

RPS A TETRA TECH COMPANY
Texas PE Firm Reg. #F-929
575 N. Dairy Ashford, Suite 700, Houston, Texas 77079
T +1 281 589 7257
E usinfrastructure@rpsgroup.com

SURVEYED BY: KUCO INC.
FB NO. F-4578

This document is released for the purposes of interim review only under the authority of:
Jeremy Austin, P.E.
Texas P.E. No. 116816
03/30/2026
It is not to be used for bidding, construction, or permitting purposes.

CITY OF HOUSTON
HOUSTON PUBLIC WORKS

RECONSTRUCTION & REHABILITATION
COH LIFT STATIONS

M.C.M.U.D. #58 LS DEMOLITION PLAN

MC58-D-2

WBS NUMBER	FOR CITY OF HOUSTON USE ONLY
R-000267-00178-3	
DRAWING SCALE	
AS NOTED	
CITY OF HOUSTON PM	
TAHA LOTIA	
SHEET NO. 164 OF 268	

PLOTTED: 3/27/2026 1:02:43 PM
PLOT STYLE:
Autodesk Docs://200-317106-24001 COH LS Rehab Design/D-LIFT STATIONS-200-317106-24001_v25.rvt

NOTES:
1. SEE DETAIL AND STRUCTURAL DRAWINGS FOR DIMENSIONS AND INFORMATION NOT SHOW.
2. ALL PIPING TO BE FLANGED, NO FLANGED COUPLING ADAPTERS OR VICTAULIC STYLE COUPLINGS PERMITTED.
3. DIMENSIONS NOTED ARE RELATIVE TO THE PUMP SIZE AND MANUFACTURER SELECTED. CONTRACTOR SHALL VERIFY SIZE AND LOCATION OF HATCHES WITH PUMP MANUFACTURER.
4. INSTALL PLUG VALVES TO OPEN UPWARD AND CLOSE TO A SEATED POSITION.
5. INSTALL CHECK VALVES SO THAT THE WEIGHT LEVER POSITION IS APPROXIMATELY 45 DEGREES BELOW THE VALVE HORIZONTAL CENTER LINE IN THE CLOSED POSITION; AND APPROXIMATELY 45 DEGREES ABOVE THE VALVE HORIZONTAL CENTER LINE IN THE FULL OPEN POSITION.
6. LABEL HATCHES WITH THE CORRESPONDING PUMP NUMBER USING A 12-INCH BY 12-INCH 316SS PLATE ENGRAVED WITH 6-INCH LETTERING WELDED TO THE HATCH.

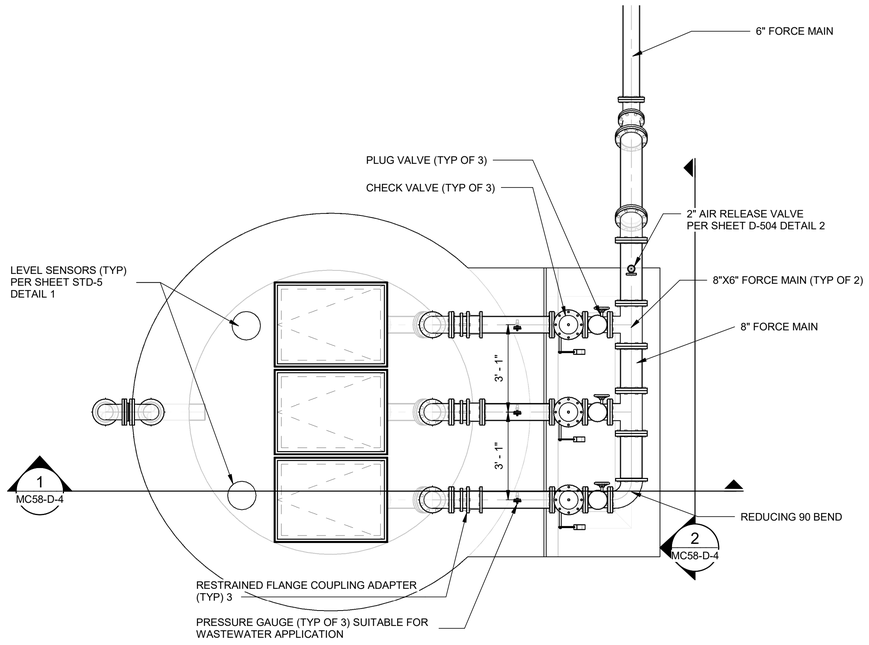

1 MC MUD PLAN VIEW
SCALE: 3/8" = 1'-0"

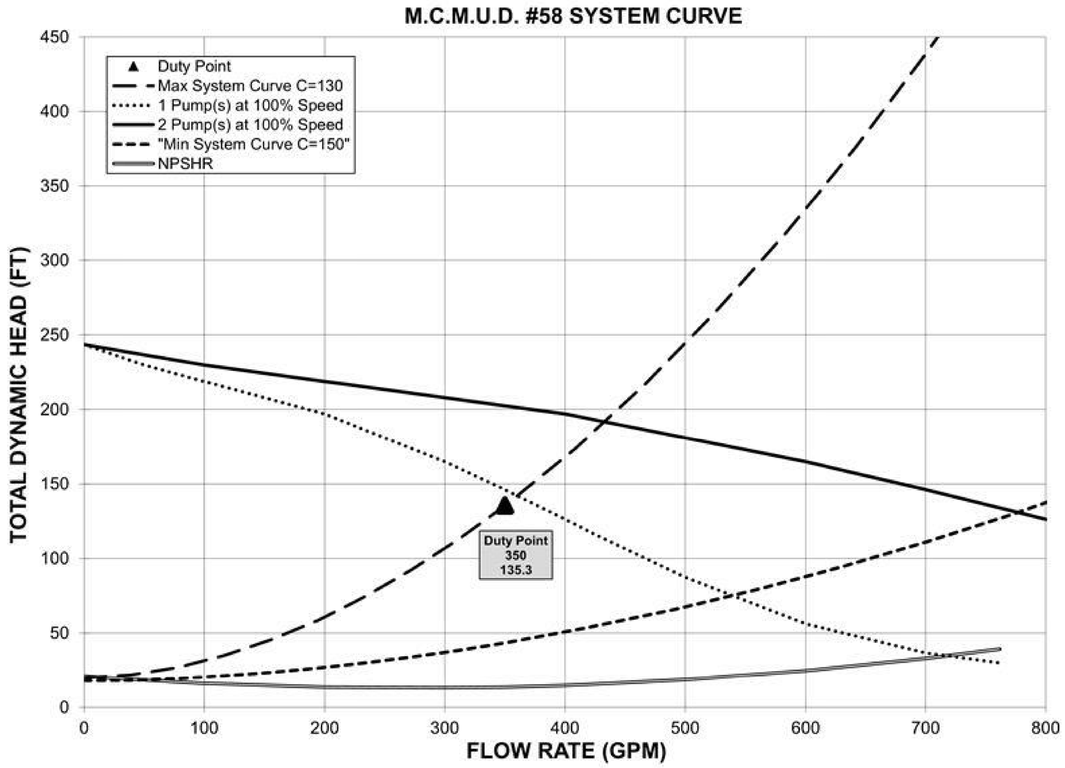

NO.	DATE	REVISION	APP.

RPS A TETRA TECH COMPANY
Texas PE Firm Reg. #F-929
575 N. Dairy Ashford, Suite 700, Houston, Texas 77079
T +1 281 589 7257
E usinfrastructure@rpsgroup.com

SURVEYED BY: KUCO INC.
FB NO. F-4578

This document is released for the purposes of interim review only under the authority of:
Jeremy Austin, P.E.
Texas P.E. No. 116816
03/30/2026
It is not to be used for bidding, construction, or permitting purposes.

CITY OF HOUSTON
HOUSTON PUBLIC WORKS

RECONSTRUCTION & REHABILITATION
COH LIFT STATIONS

M.C.M.U.D #58 LS Plan

MC58-D-3

WBS NUMBER	FOR CITY OF HOUSTON USE ONLY
R-000267-00178-3	
DRAWING SCALE	
AS NOTED	
CITY OF HOUSTON PM	
TAHA LOTIA	
SHEET NO. 165 OF 268	

8' 0' 8' 16'
SCALE: 1/8" = 1'-0"

PLOTTED: 3/27/2026 1:02:45 PM
PLOT STYLE:
Autodesk Docs://200-317106-24001 COH LS Rehab Design/D-LIFT STATIONS-200-317106-24001_v25.rvt

NOTES:
1. SEE DETAIL AND STRUCTURAL DRAWINGS FOR DIMENSIONS AND INFORMATION NOT SHOW.
2. ALL PIPING TO BE FLANGED, NO FLANGED COUPLING ADAPTERS OR VICTAULIC STYLE COUPLINGS PERMITTED.
3. DIMENSIONS NOTED ARE RELATIVE TO THE PUMP SIZE AND MANUFACTURER SELECTED. CONTRACTOR SHALL VERIFY SIZE AND LOCATION OF HATCHES WITH PUMP MANUFACTURER.
4. INSTALL PLUG VALVES TO OPEN UPWARD AND CLOSE TO A SEATED POSITION.
5. INSTALL CHECK VALVES SO THAT THE WEIGHT LEVER POSITION IS APPROXIMATELY 45 DEGREES BELOW THE VALVE HORIZONTAL CENTER LINE IN THE CLOSED POSITION; AND APPROXIMATELY 45 DEGREES ABOVE THE VALVE HORIZONTAL CENTER LINE IN THE FULL OPEN POSITION.
6. LABEL HATCHES WITH THE CORRESPONDING PUMP NUMBER USING A 12-INCH BY 12-INCH 316SS PLATE ENGRAVED WITH 6-INCH LETTERING WELDED TO THE HATCH.

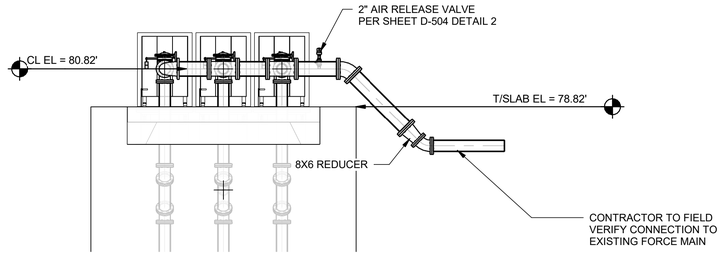

M.C.M.U.D SECTION
SCALE: 1/4" = 1'-0"

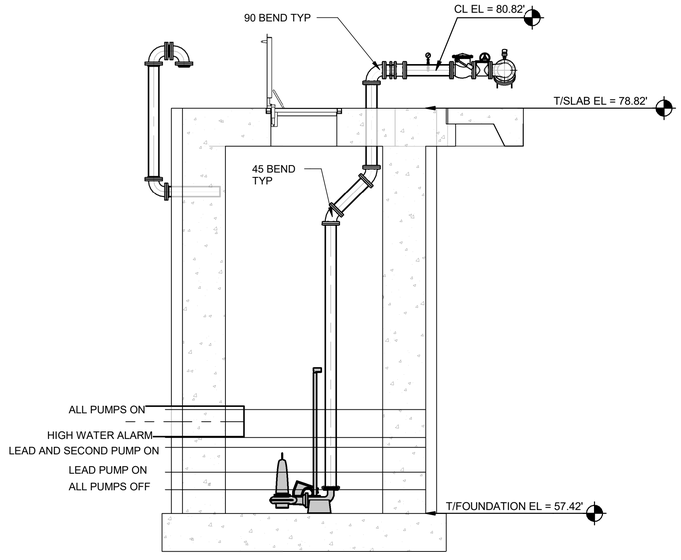

M.C.M.U.D SECTION VIEW
SCALE: 1/4" = 1'-0"

PUMP DATA TABLE

PUMP CHARACTERISTICS	PUMP NO. 1	PUMP NO. 2
MOTOR DATA		
NOMINAL SIZE (HP)	33.50	33.50
MAX SPEED (RPM)	3551	3551
SOLIDS PASSAGE		
MIN SPHERE (IN)	3.15	3.15
CAPACITY (GPM)		
DESIGN	350	350
RUNOUT	761.70	761.70
DISCHARGE HEAD (FT)		
DESIGN	146.0	146.0
RUNOUT	29.92	29.92
SHUTOFF	243.5	243.5
EFFICIENCY (%)		
DESIGN	41.03	41.03
NPSHR (FT)		
DESIGN	13.60	13.60
RUNOUT	39.16	39.16
PUMP CYCLE TIME	6	6
CUMULATIVE CAPACITY (GPM)	360	435

RISING LEVEL CYCLE			
WATER LEVEL DEPTH	WATER LEVEL ELEVATION	ACTION	PUMP(S) IN OPERATION
1.26	58.68	PUMPS OFF LEVEL - NO ACTION	ALL PUMPS OFF
2.18	59.60	LEAD PUMP TURNS ON	LEAD PUMP ON
3.48	60.90	SECOND PUMP TURNS ON	LEAD & SECOND PUMPS ON
4.00	61.42	HIGH WATER LEVEL ALARM ON	HIGH WATER ALARM SOUND
5.50	62.92	HIGH HIGH WATER LEVEL ALARM (FLOAT ON LEVEL)	ALL PUMPS ON FLOATS
FALLING LEVEL CYCLE			
WATER LEVEL DEPTH	WATER LEVEL ELEVATION	ACTION	PUMP(S) IN OPERATION
5.50	62.92	FLOAT OFF LEVEL	ALL PUMPS OFF FLOATS
4.00	61.42	HIGH WATER LEVEL ALARM OFF	LEAD & SECOND PUMPS ON
3.48	60.90	LEAD PUMP TURNS OFF	SECOND PUMP ON
2.18	59.60	SECOND PUMP TURNS OFF	ALL PUMPS STOPPED - STANDBY PUMP SWITCHES TO LEAD PUMP
0.86	58.28	LOW LEVEL ALARM	-

8' 0' 8' 16'
SCALE: 1/8" = 1'-0"

NO.	DATE	REVISION	APP.

RPS A TETRA TECH COMPANY
Texas PE Firm Reg. #F-929
575 N. Dairy Ashford, Suite 700, Houston, Texas 77079
T +1 281 589 7257
E usinfrastructure@rpsgroup.com

SURVEYED BY: KUCO INC.
FB NO. F-4578

This document is released for the purposes of interim review only under the authority of:
Jeremy Austin, P.E.
Texas P.E. No. 116816
03/30/2026
It is not to be used for bidding, construction, or permitting purposes.

CITY OF HOUSTON
HOUSTON PUBLIC WORKS

RECONSTRUCTION & REHABILITATION
COH LIFT STATIONS

M.C.M.U.D #58 LS Sections

MC58-D-4

WBS NUMBER	FOR CITY OF HOUSTON USE ONLY
R-000267-00178-3	
DRAWING SCALE	
AS NOTED	
CITY OF HOUSTON PM	
TAHA LOTIA	
SHEET NO. 166 OF 268	

PLOTTED: 3/27/2026 1:02:49 PM
PLOT STYLE:
Autodesk Docs://200-317106-24001 COH LS Rehab Design/D-LIFT STATIONS-200-317106-24001_v25.rvt

FILE PATH: O:\H8109_Lift Station Rehabilitation And Reconstruction (Tetratech)\6 Drawings\Electrical\Working\M.C. MUD #58\MC MUD_E-01.dwg
PLOT STYLE: COH.ctb
PLOTTED: 3/27/2026 11:45 AM

NO.	DATE	REVISION	APP.
	MM/DD/YY	BRIEF DESCRIPTION	XXX
	MM/DD/YY	BRIEF DESCRIPTION	XXX
	MM/DD/YY	BRIEF DESCRIPTION	XXX

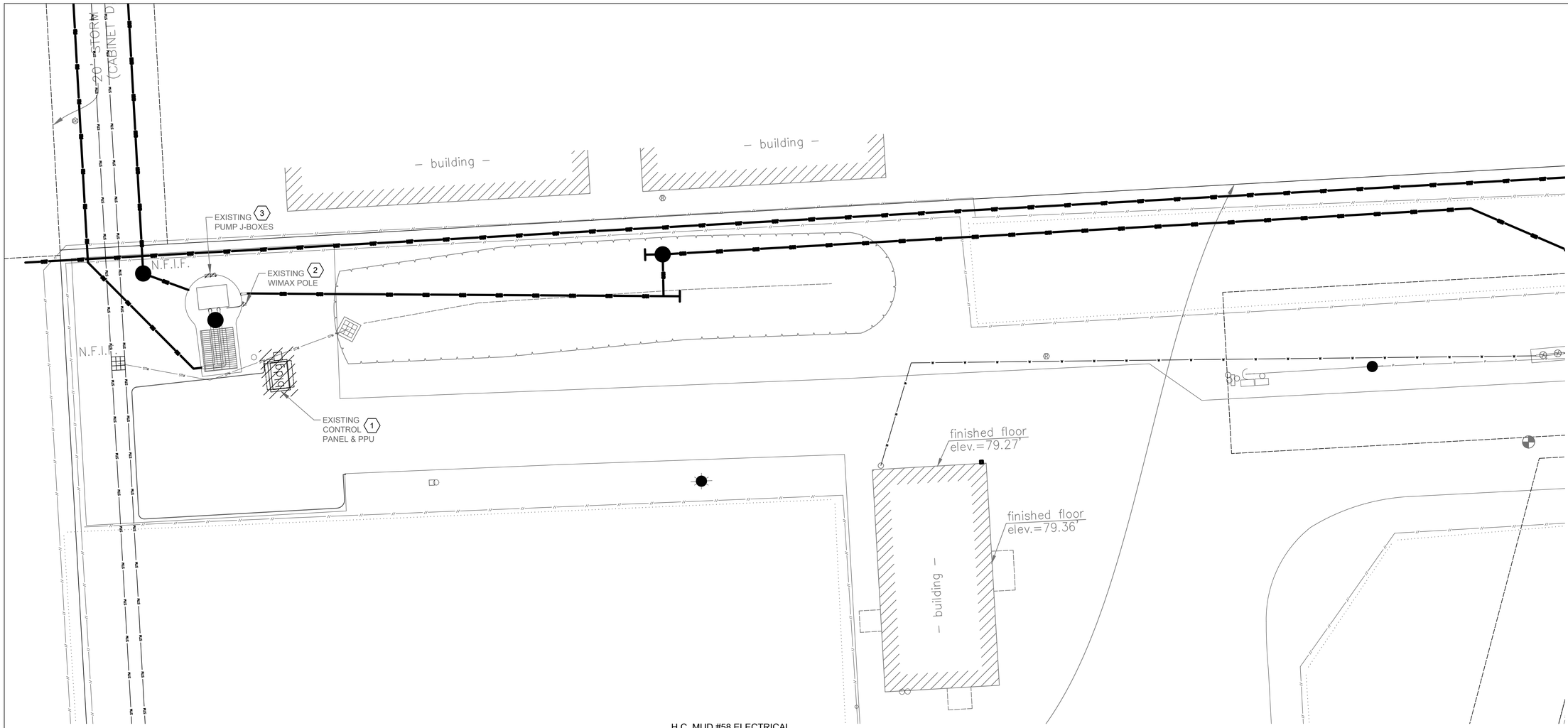

H.C. MUD #58 ELECTRICAL DEMOLITION SITE PLAN

1"= 10'-0"



EXISTING CONTROL PANEL & PPU PANEL

PHOTOGRAPH A - 1

NTS

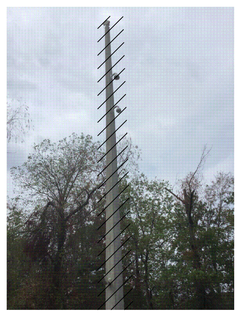

EXISTING WIMAX POLE

PHOTOGRAPH B - 2

NTS

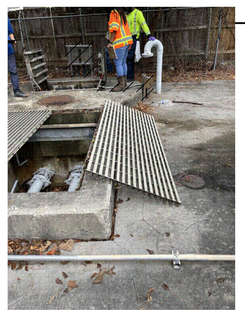

EXISTING PUMP J-BOXES

PHOTOGRAPH C - 3

NTS

NOTES BY SYMBOL "(#)":

1. EXISTING CONTROL PANEL, PPU, AND ASSOCIATED CONDUITS, WIRE, AND FIELD DEVICES TO BE DEMOLISHED AND REMOVED.
2. EXISTING WIMAX POLE AND ASSOCIATED CONDUITS, WIRE, TO BE DEMOLISHED AND REMOVED.
3. EXISTING PUMP J-BOXES AND ASSOCIATED CONDUITS, WIRE, TO BE DEMOLISHED AND REMOVED.

RPS
A TETRA TECH COMPANY
Texas PE Firm Reg. #F-929
575 N. Dairy Ashford, Suite 700,
Houston, Texas 77079
T +1 281 589 7257
E usinfrastructure@rpsgroup.com

SURVEYED BY:
FB NO. F-4578

FOR INTERIM REVIEW ONLY NOT INTENDED FOR PERMIT, BIDDING OR CONSTRUCTION PURPOSES.
ENGINEER:
HOSS FOROUZAN
P.E. SERIAL NO.77748
03/30/2026

CITY OF HOUSTON
HOUSTON PUBLIC WORKS

RECONSTRUCTION & REHABILITATION
COH LIFT STATIONS

M.C. MUD #58 LIFT STATION ELECTRICAL DEMOLITION SITE PLAN

WBS NUMBER	FOR CITY OF HOUSTON USE ONLY
R-000267-00178-3	
DRAWING SCALE	
AS NOTED	
CITY OF HOUSTON PM	
TAHA LOTIA	
SHEET NO. 167 OF 268	

MC58-E-1

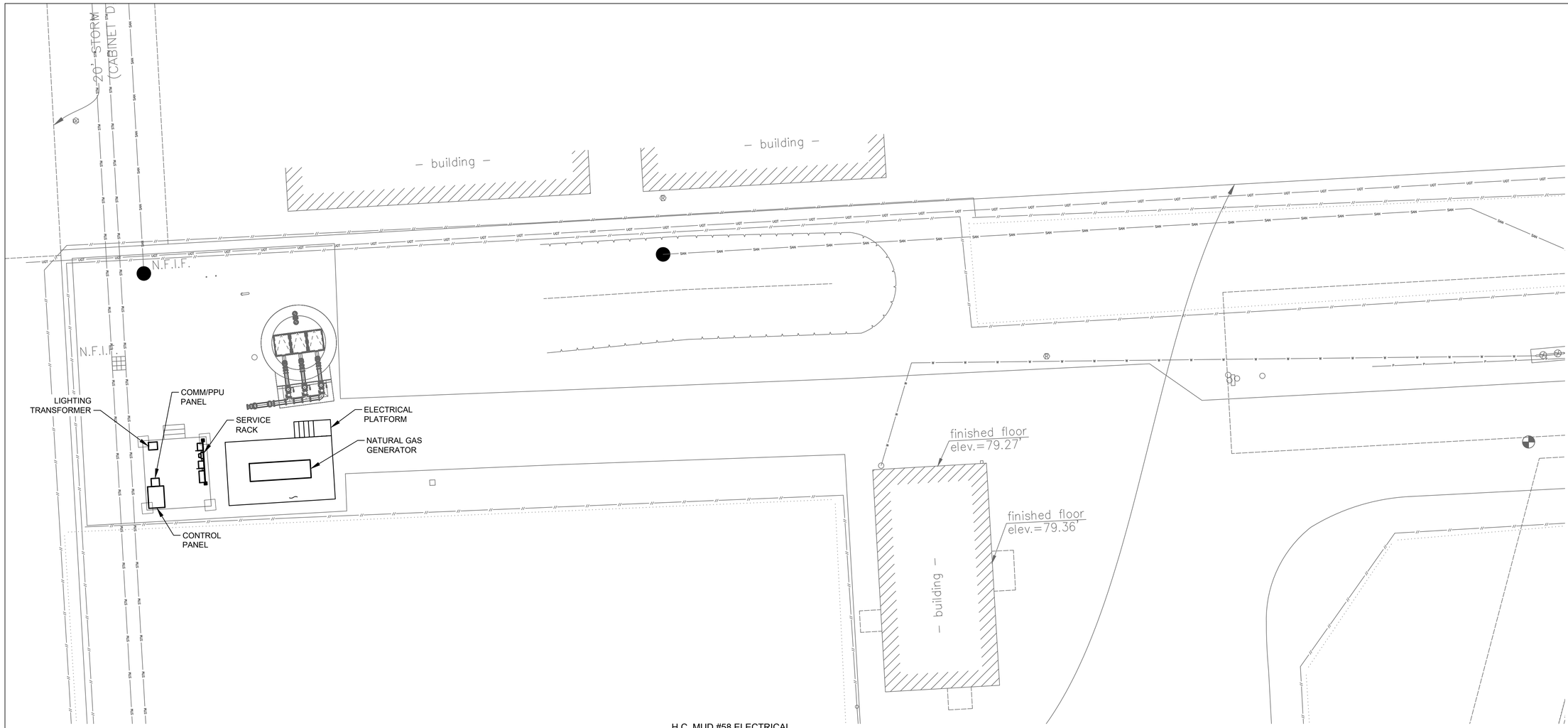

H.C. MUD #58 ELECTRICAL
PROPOSED SITE

PLAN

1"= 10'-0"

NO.	DATE	REVISION	APP.
	MM/DD/YY	BRIEF DESCRIPTION	XXX
	MM/DD/YY	BRIEF DESCRIPTION	XXX
	MM/DD/YY	BRIEF DESCRIPTION	XXX

RPS
A TETRA TECH COMPANY
Texas PE Firm Reg. #F-929
575 N. Dairy Ashford, Suite 700,
Houston, Texas 77079
T +1 281 589 7257
E usinfrastructure@rpsgroup.com

SURVEYED BY:
FB NO. F-4578

FOR INTERIM REVIEW ONLY NOT INTENDED FOR PERMIT, BIDDING OR CONSTRUCTION PURPOSES.
ENGINEER:
HOSS FOROUZAN
P.E. SERIAL NO.77748
03/30/2026

CITY OF HOUSTON
HOUSTON PUBLIC WORKS

RECONSTRUCTION & REHABILITATION
COH LIFT STATIONS

M.C. MUD #58 LIFT STATION ELECTRICAL PROPOSED SITE PLAN

WBS NUMBER	FOR CITY OF HOUSTON USE ONLY
R-000267-00178-3	
DRAWING SCALE	
AS NOTED	
CITY OF HOUSTON PM	
TAHA LOTIA	
SHEET NO. 168 OF 268	

MC58-E-2

PLOTTED: 3/27/2026 11:45 AM

FILE PATH: O:\H8109_Lift Station Rehabilitation And Reconstruction (Tetratech)\6 Drawings\Electrical\Working\M.C. MUD #58\MC MUD_E-02.dwg PLOT STYLE: GAI.ctb

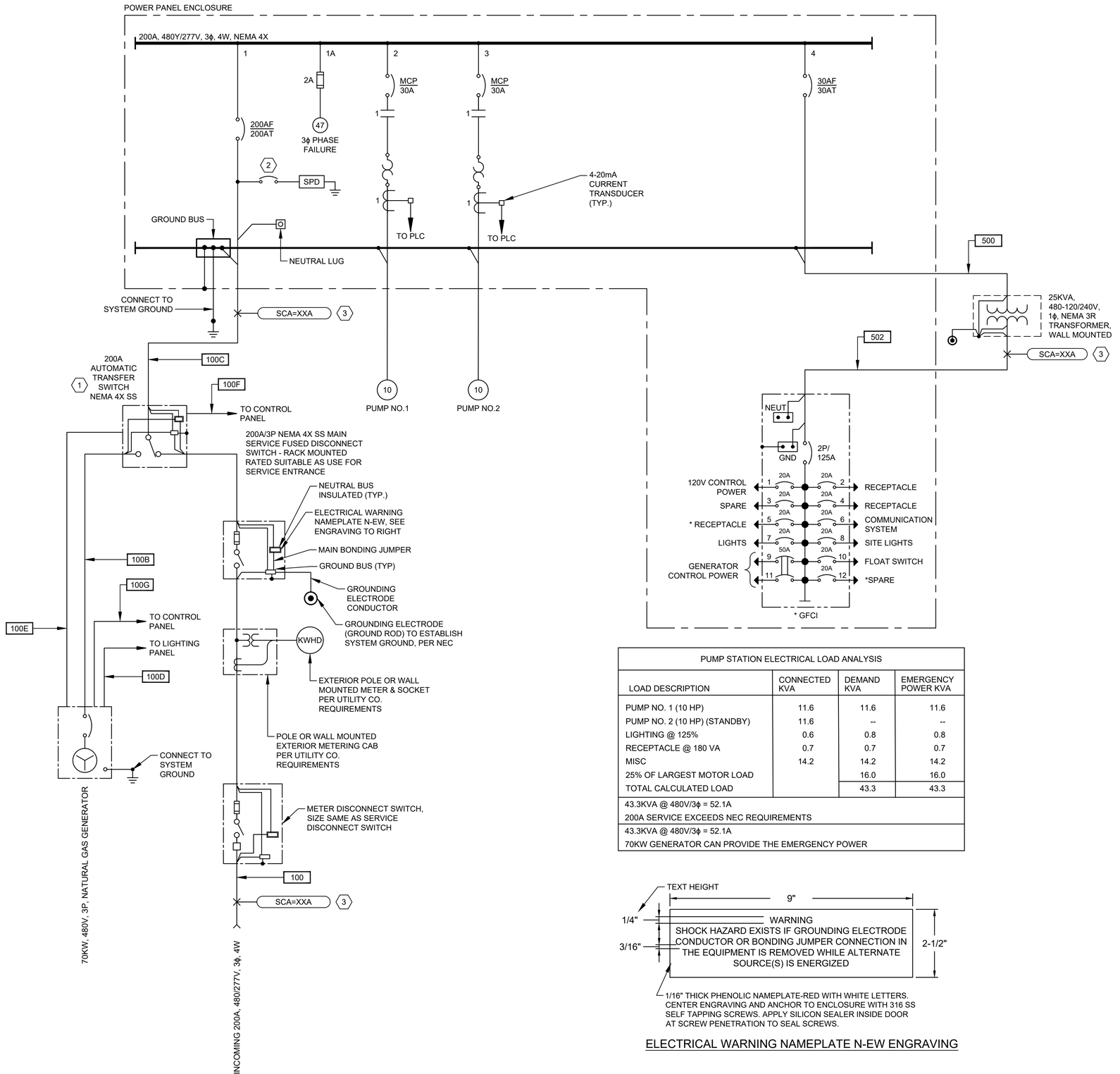

PUMP STATION ELECTRICAL LOAD ANALYSIS			
LOAD DESCRIPTION	CONNECTED KVA	DEMAND KVA	EMERGENCY POWER KVA
PUMP NO. 1 (10 HP)	11.6	11.6	11.6
PUMP NO. 2 (10 HP) (STANDBY)	11.6	--	--
LIGHTING @ 125%	0.6	0.8	0.8
RECEPTACLE @ 180 VA	0.7	0.7	0.7
MISC	14.2	14.2	14.2
25% OF LARGEST MOTOR LOAD		16.0	16.0
TOTAL CALCULATED LOAD		43.3	43.3
43.3KVA @ 480V/3ϕ = 52.1A 200A SERVICE EXCEEDS NEC REQUIREMENTS			
43.3KVA @ 480V/3ϕ = 52.1A 70KW GENERATOR CAN PROVIDE THE EMERGENCY POWER			

ELECTRICAL WARNING NAMEPLATE N-EW ENGRAVING

NOTES BY SYMBOL "#":

1. PROVIDE A NORMALLY OPEN (NO) AUXILIARY CONTACT ON BOTH ON POSITIONS.
2. PROVIDE BREAKER ACCORDING TO MANUFACTURER'S REQUIREMENTS.
3. POINT TO POINT METHOD IS USED FOR SHORT CIRCUIT CURRENT CALCULATION.
4. CONTRACTOR SHALL PROVIDE A PERMANENTLY AFFIXED LABEL (2' X 3") SHOWING THE AVAILABLE FAULT CURRENT AND CALCULATION DATE. THE LABEL SHALL BE BLUE LETTERING ON A CONTRASTING BACKGROUND.
5. THE INSULATION TYPES OF ALL ELECTRICAL CONDUCTORS USED IN THE PROJECT HAVE BEEN SPECIFIED IN ELECTRICAL SPECIFICATIONS (16120, 16121, AND 16122). THE TYPES OF CONDUITS USED IN THE PROJECT HAS BEEN SPECIFIED IN ELECTRICAL SPECIFICATIONS 16111.

NO.	DATE	REVISION	APP.
	MM/DD/YY	BRIEF DESCRIPTION	XXX
	MM/DD/YY	BRIEF DESCRIPTION	XXX
	MM/DD/YY	BRIEF DESCRIPTION	XXX

RPS A TETRA TECH COMPANY
Texas PE Firm Reg. #F-929
575 N. Dairy Ashford, Suite 700, Houston, Texas 77079
T +1 281 589 7257
E usinfrastructure@rpsgroup.com

SURVEYED BY:
FB NO. F-4578

FOR INTERIM REVIEW ONLY NOT INTENDED FOR PERMIT, BIDDING OR CONSTRUCTION PURPOSES.
ENGINEER:
HOSS FOROUZAN
P.E. SERIAL NO.77748
03/30/2026

CITY OF HOUSTON
HOUSTON PUBLIC WORKS

RECONSTRUCTION & REHABILITATION
COH LIFT STATIONS
M.C. MUD #58
LIFT STATION
ELECTRICAL SINGLE LINE DIAGRAM

WBS NUMBER	FOR CITY OF HOUSTON USE ONLY
R-000267-00178-3	
DRAWING SCALE	
AS NOTED	
CITY OF HOUSTON PM	
TAHA LOTIA	
SHEET NO. 169 OF 268	

MC58-E-3

FILE PATH: O:\H8109_Lift Station Rehabilitation And Reconstruction (Tetratech)\6 Drawings\Electrical\Working\M.C. MUD #58\MC MUD_E-03.dwg PLOT STYLE: GAI.ctb PLOTTED: 3/27/2026 11:45 AM

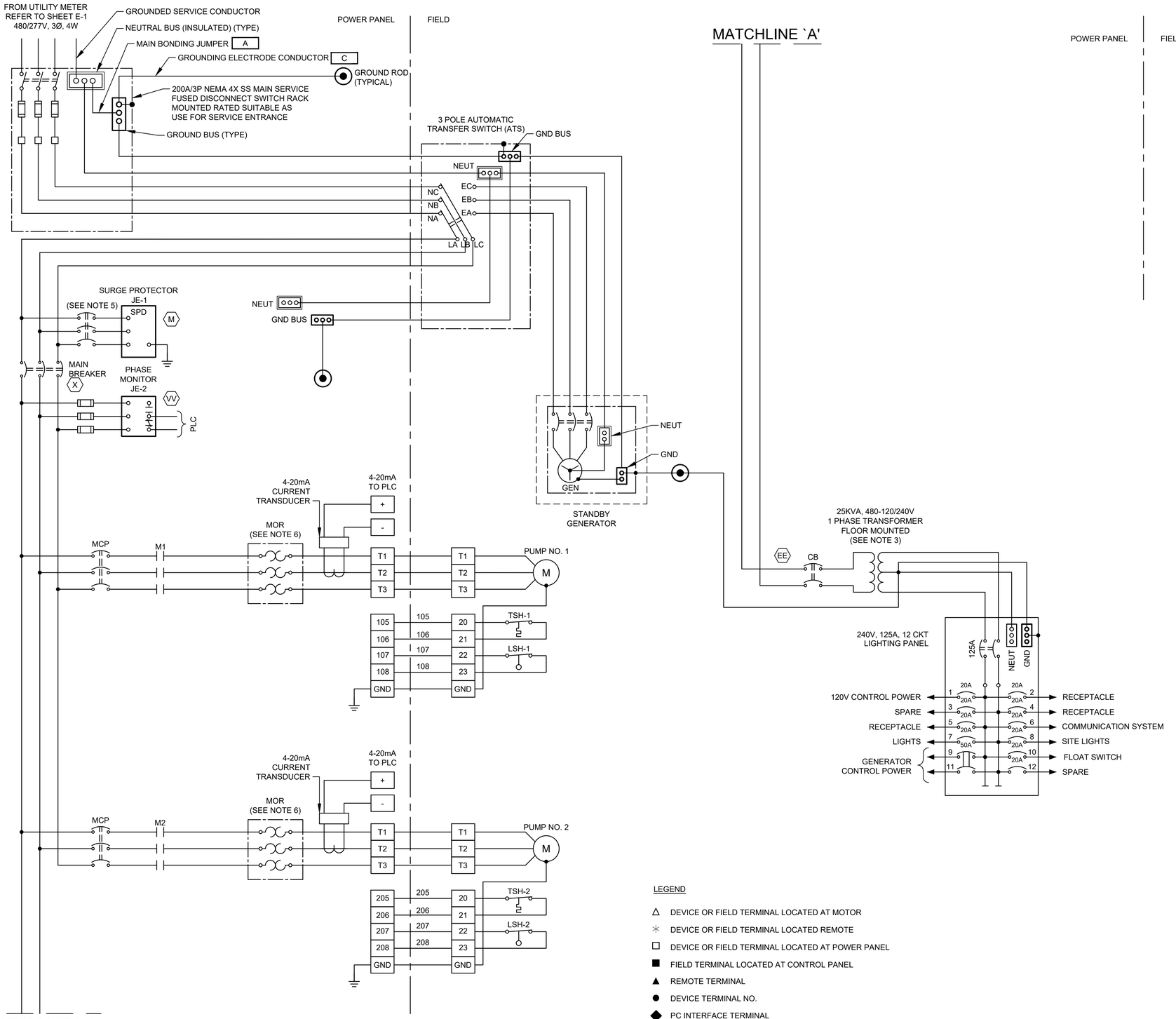

NOTES:

1. UNLESS OTHERWISE INDICATED, ALL DEVICES WITHOUT FURTHER DESIGNATION ARE LOCATED AT THE CONTROL PANEL.
2. NOT USED.
3. CONTRACTOR TO REVISE DWG. BASED ON MANUFACTURE AND SIZE.
4. CONTRACTOR SHALL TERMINATE POWER & CONTROL WIRES PER MANUFACTURER'S REQUIREMENTS.
5. PROVIDE BREAKER SIZE ACCORDING TO MANUFACTURER'S REQUIREMENTS.
6. THE COMBINATION OF CT AND MOTOR OVERLOAD RELAY IF REQUIRED.

LEGEND

- △ DEVICE OR FIELD TERMINAL LOCATED AT MOTOR
- ✳ DEVICE OR FIELD TERMINAL LOCATED REMOTE
- □ DEVICE OR FIELD TERMINAL LOCATED AT POWER PANEL
- ■ FIELD TERMINAL LOCATED AT CONTROL PANEL
- ▲ REMOTE TERMINAL
- ● DEVICE TERMINAL NO.
- ◆ PC INTERFACE TERMINAL

NO.	DATE	REVISION	APP.
	MM/DD/YY	BRIEF DESCRIPTION	XXX
	MM/DD/YY	BRIEF DESCRIPTION	XXX
	MM/DD/YY	BRIEF DESCRIPTION	XXX

rps
A TETRA TECH COMPANY
Texas PE Firm Reg. #F-929
575 N. Dairy Ashford, Suite 700, Houston, Texas 77079
T +1 281 589 7257
E usinfrastructure@rpsgroup.com

FOR INTERIM REVIEW ONLY NOT INTENDED FOR PERMIT, BIDDING OR CONSTRUCTION PURPOSES.
ENGINEER:
HOSS FOROUZAN
P.E. SERIAL NO.77748
03/30/2026

SURVEYED BY:
FB NO. F-4578

CITY OF HOUSTON
HOUSTON PUBLIC WORKS

RECONSTRUCTION & REHABILITATION
COH LIFT STATIONS

M.C. MUD #58 LIFT STATION ELECTRICAL THREE LINE DIAGRAM

WBS NUMBER	FOR CITY OF HOUSTON USE ONLY
R-000267-00178-3	
DRAWING SCALE	
AS NOTED	
CITY OF HOUSTON PM	
TAHA LOTIA	
SHEET NO. 170 OF 268	

MC58-E-4

PLOTTED: 3/27/2026 11:45 AM
PLOT STYLE: GAI.ctb
FILE PATH: O:\H8109_Lift Station Rehabilitation And Reconstruction (Tetratech)\6 Drawings\Electrical\Working\M.C. MUD #58\MC MUD_E-04.dwg

NOTES BY SYMBOL "⟨#⟩":

1. REFER TO STRUCTURAL DRAWINGS FOR PLATFORM DETAILS.
2. CONDUIT TO BE INSTALLED BELOW PLATFORM.
3. GENERATOR IS FOR EMERGENCY USE ONLY.

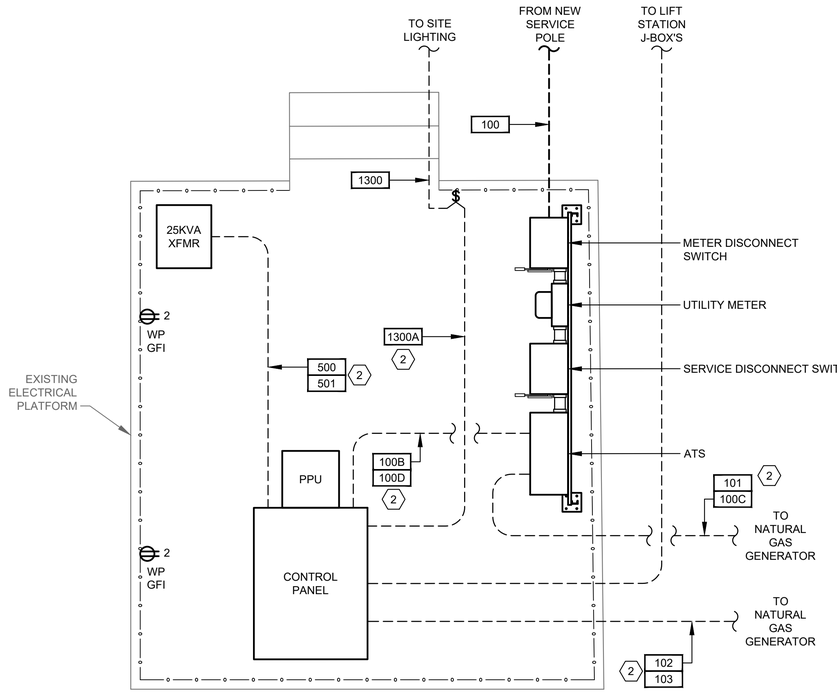

PROPOSED ELECTRICAL PLATFORM LAYOUT

DETAIL 1 (1) (3)

1" = 2'-0"

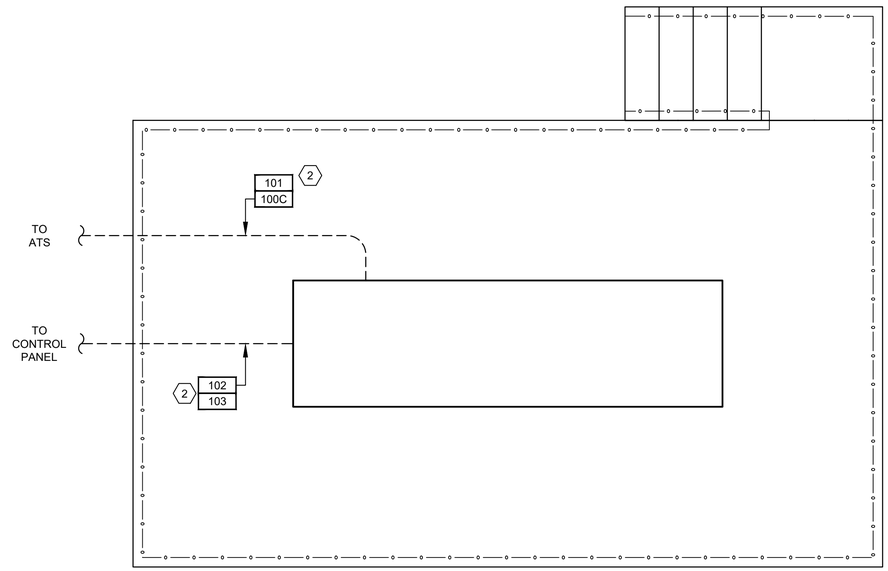

PROPOSED GENERATOR PLATFORM LAYOUT

DETAIL 2 (1) (3)

1" = 2'-0"

NO.	DATE	REVISION	APP.
	MM/DD/YY	BRIEF DESCRIPTION	XXX
	MM/DD/YY	BRIEF DESCRIPTION	XXX
	MM/DD/YY	BRIEF DESCRIPTION	XXX

RPS A TETRA TECH COMPANY
Texas PE Firm Reg. #F-929
575 N. Dairy Ashford, Suite 700,
Houston, Texas 77079
T +1 281 589 7257
E usinfrastructure@rpsgroup.com

FOR INTERIM REVIEW ONLY NOT INTENDED FOR PERMIT, BIDDING OR CONSTRUCTION PURPOSES.
ENGINEER:
HOSS FOROUZAN
P.E. SERIAL NO.77748
03/30/2026

SURVEYED BY:
FB NO. F-4578

CITY OF HOUSTON
HOUSTON PUBLIC WORKS

RECONSTRUCTION & REHABILITATION
COH LIFT STATIONS

M.C. MUD #58 LIFT STATION PROPOSED ELECTRICAL PLATFORM LAYOUT

WBS NUMBER	FOR CITY OF HOUSTON USE ONLY
R-000267-00178-3	
DRAWING SCALE	
AS NOTED	
CITY OF HOUSTON PM	
TAHA LOTIA	
SHEET NO. 171 OF 268	

MC58-E-5

FILE PATH: O:\H8109_Lift Station Rehabilitation And Reconstruction (Tetratech)\6 Drawings\Electrical\Working\M.C. MUD #58\MC MUD_E-05.dwg
PLOT STYLE: GAI.ctb
PLOTTED: 3/27/2026 11:45 AM

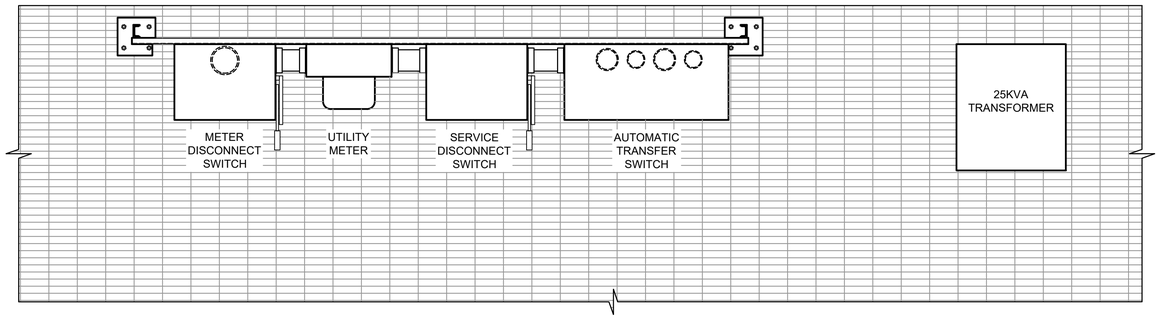

PLAN VIEW

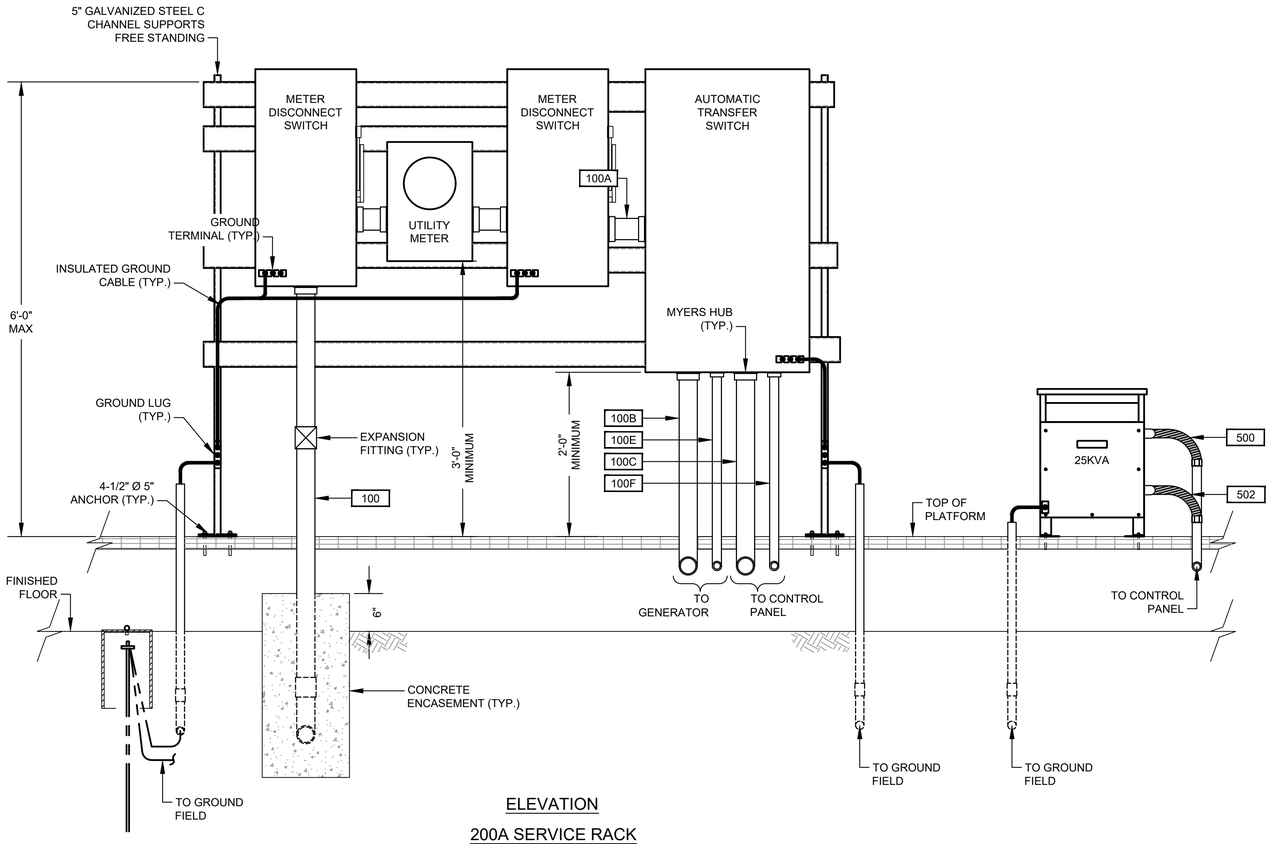

ELEVATION

200A SERVICE RACK

NO.	DATE	REVISION	APP.
	MM/DD/YY	BRIEF DESCRIPTION	XXX
	MM/DD/YY	BRIEF DESCRIPTION	XXX
	MM/DD/YY	BRIEF DESCRIPTION	XXX

RPS A TETRA TECH COMPANY
Texas PE Firm Reg. #F-929
575 N. Dairy Ashford, Suite 700,
Houston, Texas 77079
T +1 281 589 7257
E usinfrastructure@rpsgroup.com

SURVEYED BY:
FB NO. F-4578

FOR INTERIM REVIEW ONLY NOT INTENDED FOR PERMIT, BIDDING OR CONSTRUCTION PURPOSES.
ENGINEER:
HOSS FOROUZAN
P.E. SERIAL NO.77748
03/30/2026

CITY OF HOUSTON
HOUSTON PUBLIC WORKS

RECONSTRUCTION & REHABILITATION
COH LIFT STATIONS

M.C. MUD #58 LIFT STATION ELECTRICAL SERVICE RACK DETAIL

WBS NUMBER	FOR CITY OF HOUSTON USE ONLY
R-000267-00178-3	
DRAWING SCALE	
AS NOTED	
CITY OF HOUSTON PM	
TAHA LOTIA	
SHEET NO. 172 OF 268	

MC58-E-6

FILE PATH: O:\H8109_Lift Station Rehabilitation And Reconstruction (Tetratech)\6 Drawings\Electrical\Working\M.C. MUD #58\MC MUD_E-06.dwg
PLOT STYLE: GAI.ctb
PLOTTED: 3/27/2026 11:45 AM

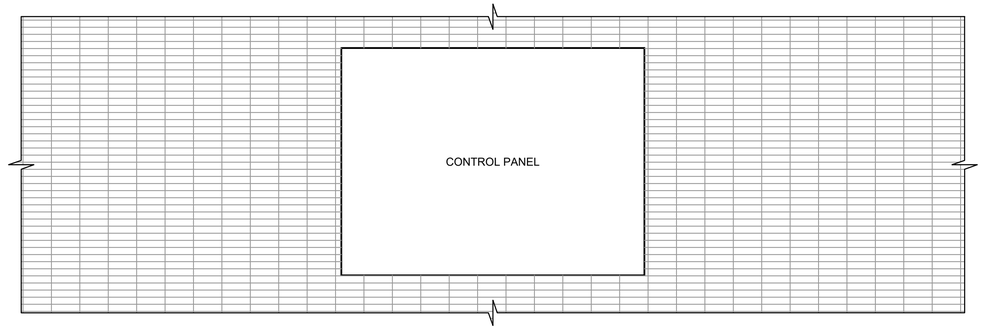

PLAN VIEW

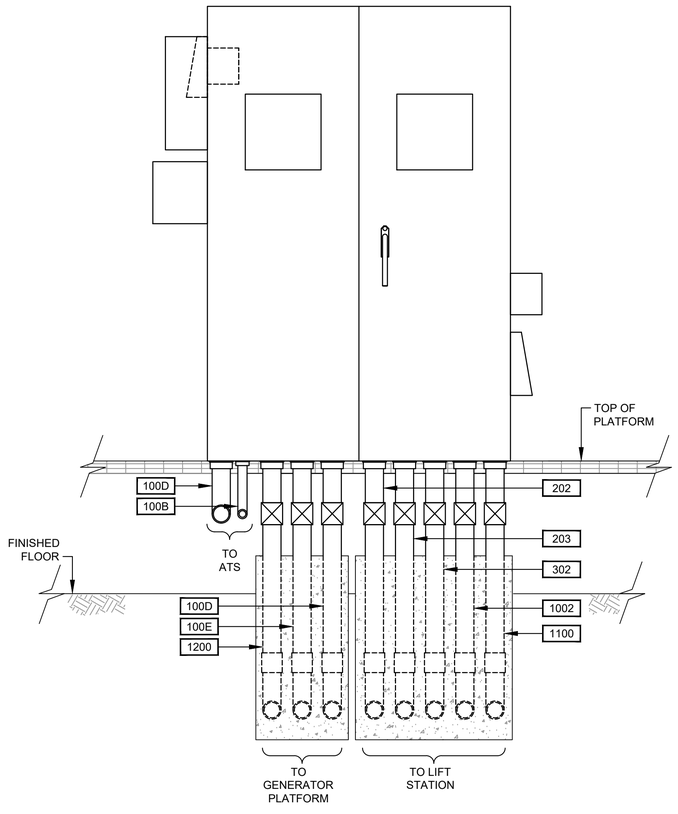

CONTROL PANEL ELEVATION

DETAIL 1 / NTS

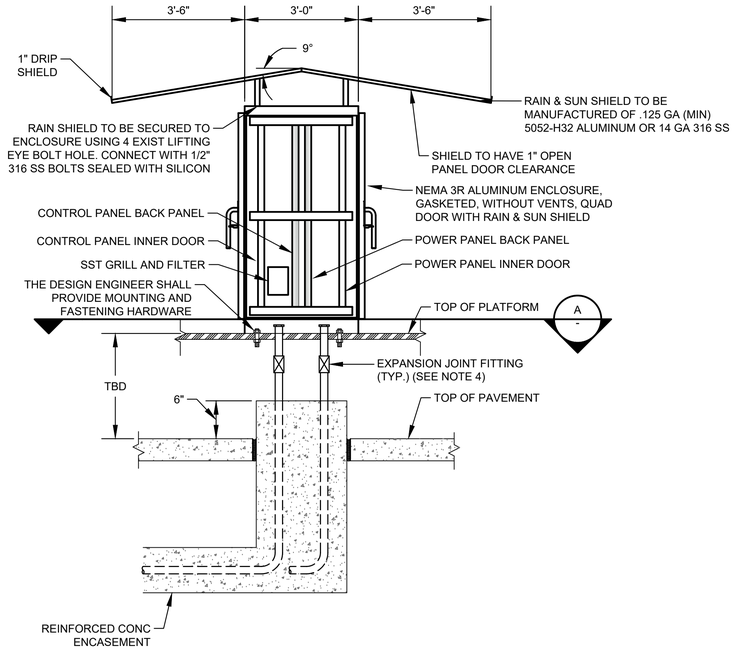

CONTROL CABINET ENCLOSURE WITH PLATFORM
(SEE NOTE 6)

DETAIL 2 / NTS

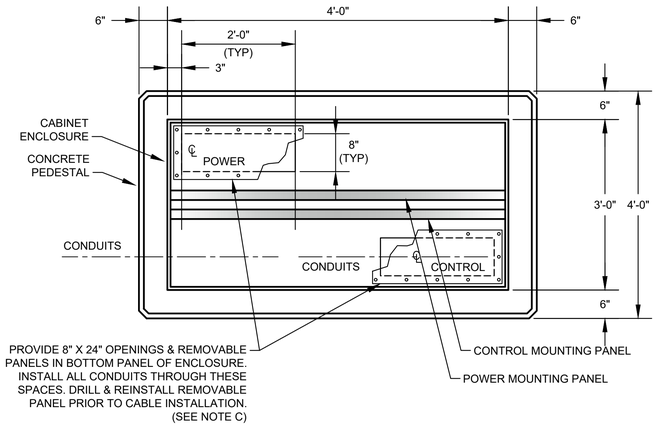

SECTION A / NTS

GENERAL NOTES:

1. REFER TO SPECIFICATION SECTION 13325 PROCESS CONTROL SYSTEMS CONTROL PANELS FOR PANEL DIMENSIONS.
2. COMMUNICATION PANEL TO BE INSTALLED ABOVE SERVICE RACK ELEVATION.
3. EXPANSION JOINT FITTINGS AS REQUIRED.
4. REFER TO SERVICE RACK FOR DETAIL.
5. POWER FACTOR CAPACITOR TO BE MOUNTED OUTSIDE SIDE WALL OF THE CONTROL CABINET.
6. REFER TO STRUCTURAL DRAWINGS FOR PLATFORM DETAIL.

NO.	DATE	REVISION	APP.
	MM/DD/YY	BRIEF DESCRIPTION	XXX
	MM/DD/YY	BRIEF DESCRIPTION	XXX
	MM/DD/YY	BRIEF DESCRIPTION	XXX

RPS A TETRA TECH COMPANY
Texas PE Firm Reg. #F-929
575 N. Dairy Ashford, Suite 700, Houston, Texas 77079
T +1 281 589 7257
E usinfrastructure@rpsgroup.com

SURVEYED BY:
FB NO. F-4578

FOR INTERIM REVIEW ONLY NOT INTENDED FOR PERMIT, BIDDING OR CONSTRUCTION PURPOSES.
ENGINEER:
HOSS FOROUZAN
P.E. SERIAL NO.77748
03/30/2026

CITY OF HOUSTON
HOUSTON PUBLIC WORKS

RECONSTRUCTION & REHABILITATION
COH LIFT STATIONS

M.C. MUD #58 LIFT STATION CONTROL CABINET ENCLOSURE DETAIL

WBS NUMBER	FOR CITY OF HOUSTON USE ONLY
R-000267-00178-3	
DRAWING SCALE	
AS NOTED	
CITY OF HOUSTON PM	
TAHA LOTIA	
SHEET NO. 173 OF 268	

MC58-E-7

PLOTTED: 3/27/2026 11:47 AM
FILE PATH: O:\H8109_Lift Station Rehabilitation And Reconstruction (Tetratech)\6 Drawings\Electrical\Working\M.C. MUD #58\MC MUD_E-07.dwg PLOT STYLE: GAI.ctb

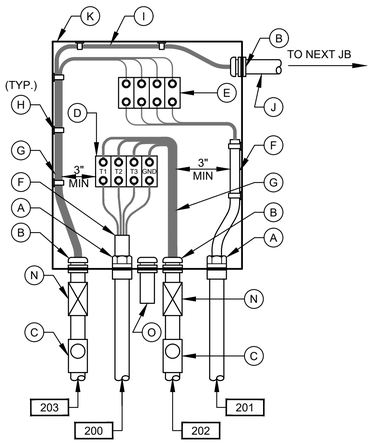

PUMP NO.1
JUNCTION BOX

DETAIL 2
NTS
(SEE NOTE & 7)

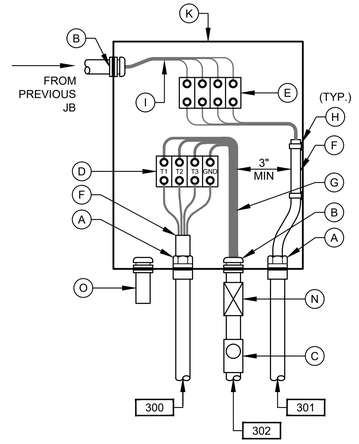

PUMP NO.2
JUNCTION BOX

DETAIL 3
NTS
(SEE NOTE & 7)

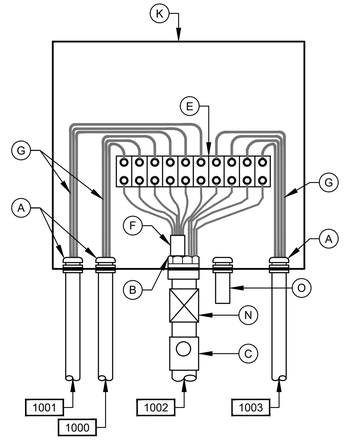

LEVEL TRANSMITTER
JUNCTION BOX

DETAIL 4
NTS
(SEE NOTE & 7)

NOTES:

1. NAMEPLATES SHALL BE MOUNTED TO JUNCTION BOXES USING 316 STAINLESS STEEL HARDWARE.
2. MAINTAIN MINIMUM SEPARATION REQUIRED UNDER NEC ARTICLE 504, BETWEEN INTRINSICALLY SAFE CONTROL WIRING AND NON INTRINSICALLY SAFE MOTOR FEEDER WIRING.
3. UNLESS OTHERWISE NOTED, ALL EXTERIOR EXPOSED CONDUITS SHALL BE PVC COATED ALUMINUM.
4. UNLESS OTHERWISE NOTED, ALL NUTS, BOLTS, SCREWS WASHERS, ETC SHALL BE TYPE 316 STAINLESS STEEL.
5. ALL UNDERGROUND CONDUITS TO BE ENCASED IN REINFORCED CONCRETE DUCTBANK.
6. PROVIDE ANTI-CORROSIVE SPRAY ON ANY BARE METAL PARTS OR EXPOSED WIRE.
7. SEE WIRING SCHEMATICS FOR TERMINALS AND WIRE NUMBERS.
8. ANY CONDUIT REQUIRING A CSBE SEAL, SHALL BE A MINIMUM SIZE OF 2 1/2" PER CABLE.
9. DETAIL SHOWN MAY BE MODIFIED PER SITE SITUATION.
10. COORDINATE WITH WASTE WATER OPERATIONS ELECTRICAL ORGANIZATION FOR THE OPENING OF JUNCTION BOXES TO THE SIDE OF WET WELL IF REQUIRED DURING CONSTRUCTION.
11. THE ENCLOSURES WITH ELECTRICAL CIRCUITS SHALL BE A MINIMUM OF 5 FEET FROM ANY CLASSIFIED AREA, OTHERWISE EXPLOSION PROOF TYPE ENCLOSURES SHALL BE USED.
12. THE RECEPTACLES SHALL BE EXPLOSION PROOF TYPE IF INSTALLED WITHIN 5 FEET OF CLASSIFIED AREA, SHALL BE FIELD VERIFIED.

JUNCTION BOX EQUIPMENT SCHEDULE

- A - OZ GEDNEY CSBE SEAL
- B - WATERTIGHT CONDUIT HUB WITH INSULATED BUSHING
- C - CLASS I, DIV 1, EXPLOSION PROOF SEAL INSTALLED PER NEC DIV 501
- D - POWER TERMINAL BLOCK W/SCREW DOWN BOX LUGS
- E - CONTROL TERM BLOCK W/SCREW DOWN BOX LUGS
- F - MULTI-CONDUCTOR CABLE, REMOVE OUTER JACKET AS SHOWN
- G - WIRING AS SCHEDULED
- H - WIRING HARNESS PERMANENTLY AFFIXED
- I - PUMP CONTROL WIRING FROM PUMPS 2; 2 & 3; 4; OR D2, AS APPLICABLE
- J - 1 1/2" PVC COATED CONDUIT NIPPLE
- K - NEMA 4X STAINLESS STEEL JUNCTION BOX WITH GASKETED FRONT COVER, SINGLE QUARTER TURN, OIL-TIGHT LATCH AND PADLOCKING PROVISIONS, HOFFMAN D-3L16H1206 SS LF OR EQUAL. MINIMUM SIZE: 12"W X 16"H X 6"D
- L - NAMEPLATE, SEE SPECIFICATIONES (SEE NAMEPLATE SCHEDULE)
- M - MOTOR RATED SWITCH
- N - EXPANSION FITTING
- O - DRAIN VENT

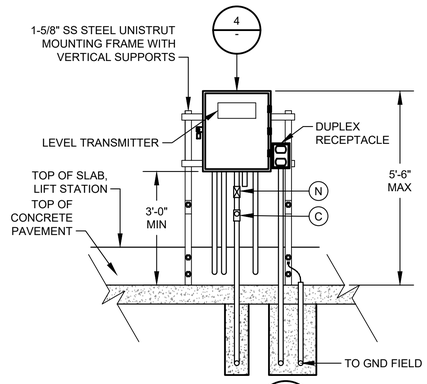

DETAIL 5
NTS

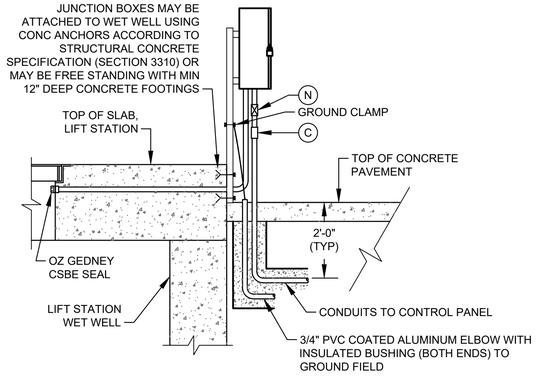

TYP SIDE VIEW FOR DETAIL 1

(SEE NOTE 10)

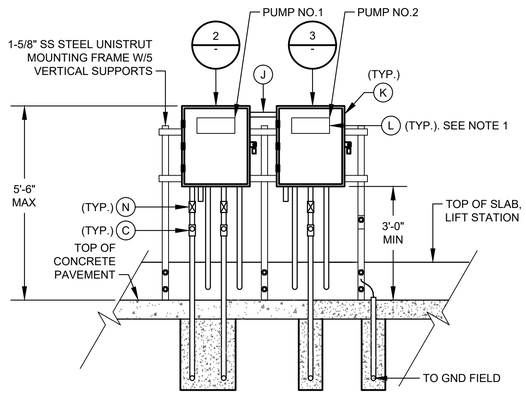

DETAIL 1
NTS

NO.	DATE	REVISION	APP.
	MM/DD/YY	BRIEF DESCRIPTION	XXX
	MM/DD/YY	BRIEF DESCRIPTION	XXX
	MM/DD/YY	BRIEF DESCRIPTION	XXX

RPS A TETRA TECH COMPANY
Texas PE Firm Reg. #F-929
575 N. Dairy Ashford, Suite 700, Houston, Texas 77079
T +1 281 589 7257
E usinfrastructure@rpsgroup.com

SURVEYED BY:
FB NO. F-4578

FOR INTERIM REVIEW ONLY NOT INTENDED FOR PERMIT, BIDDING OR CONSTRUCTION PURPOSES.
ENGINEER:
HOSS FOROUZAN
P.E. SERIAL NO.77748
03/30/2026

CITY OF HOUSTON
HOUSTON PUBLIC WORKS

RECONSTRUCTION & REHABILITATION
COH LIFT STATIONS

M.C. MUD #58 LIFT STATION ELECTRICAL JUNCTION BOX DETAIL

WBS NUMBER	FOR CITY OF HOUSTON USE ONLY
R-000267-00178-3	
DRAWING SCALE	
AS NOTED	
CITY OF HOUSTON PM	
TAHA LOTIA	
SHEET NO. 174 OF 268	

MC58-E-8

PLOTTED: 3/27/2026 11:47 AM
FILE PATH: O:\H8109_Lift Station Rehabilitation And Reconstruction (Tetratech)\6 Drawings\Electrical\Working\M.C. MUD #58\MC MUD_E-08.dwg PLOT STYLE: GAI.ctb

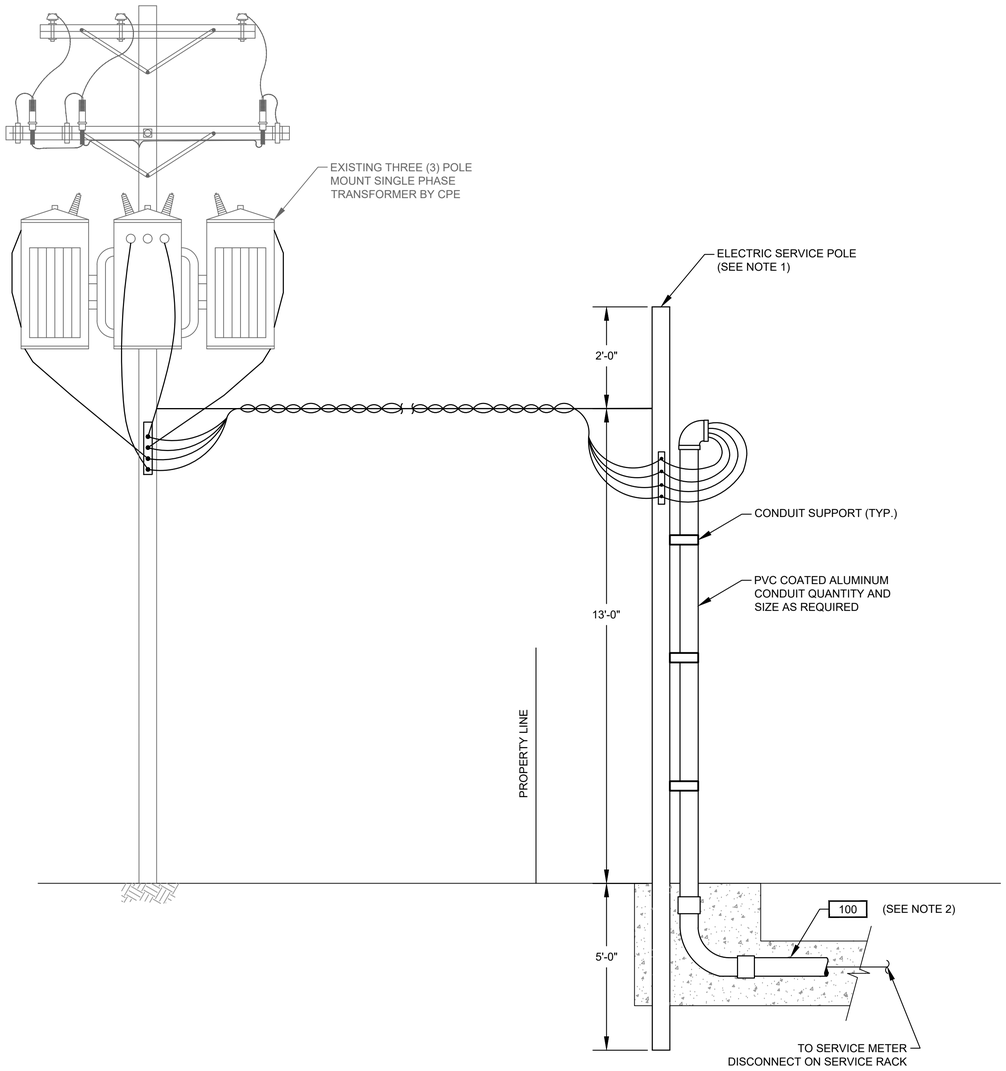

TYPICAL ELECTRICAL SERVICE ENTRANCE
FOR POWER SUPPLY BELOW 500KVA

DETAIL 1
NTS. -

NOTES:

1. WOODEN POLE 20' LONG. TOP DIAMETER 6", BOTTOM DIAMETER 8" PROVIDED AND INSTALLED BY ELECTRICAL CONTRACTOR.
2. ELECTRICAL SERVICE FEEDER PROVIDED AND INSTALLED BY ELECTRICAL CONTRACTOR. COORDINATE WITH CPE FOR THE REQUIREMENTS OF THE INSTALLATION.

NO.	DATE	REVISION	APP.
	MM/DD/YY	BRIEF DESCRIPTION	XXX
	MM/DD/YY	BRIEF DESCRIPTION	XXX
	MM/DD/YY	BRIEF DESCRIPTION	XXX

RPS A TETRA TECH COMPANY
Texas PE Firm Reg. #F-929
575 N. Dairy Ashford, Suite 700,
Houston, Texas 77079
T +1 281 589 7257
E usinfrastructure@rpsgroup.com

SURVEYED BY:
FB NO. F-4578

FOR INTERIM REVIEW ONLY NOT INTENDED FOR PERMIT, BIDDING OR CONSTRUCTION PURPOSES.
ENGINEER:
HOSS FOROUZAN
P.E. SERIAL NO.77748
03/30/2026

CITY OF HOUSTON
HOUSTON PUBLIC WORKS

RECONSTRUCTION & REHABILITATION
COH LIFT STATIONS

M.C. MUD #58 LIFT STATION ELECTRICAL SERVICE POLE DETAIL

WBS NUMBER	FOR CITY OF HOUSTON USE ONLY
R-000267-00178-3	
DRAWING SCALE	
AS NOTED	
CITY OF HOUSTON PM	
TAHA LOTIA	
SHEET NO. 175 OF 268	

MC58-E-9

FILE PATH: O:\H8109_Lift Station Rehabilitation And Reconstruction (Tetratech)\6 Drawings\Electrical\Working\M.C. MUD #58\MC MUD_E-09.dwg
PLOT STYLE: GAI.ctb
PLOTTED: 3/27/2026 11:47 AM

	DESCRIPTION	SERVICE		ROUTING			CONDUIT & WIRE SIZE
		VOLTAGE	AMPS OR HP	FROM	TO	VIA	
A	MAIN BONDING JUMPER	--	--	MAIN FUSED DISCONNECT NEUTRAL	MAIN FUSED DISCONNECT GROUND	--	#1/0 CU GND.
B	EQUIPMENT BONDING JUMPER	--	--	MCC/POWER PANEL ENCLOSURE	POWER/CONTROL PANEL & EQUIPMENT	--	#1/0 CU GND.
C	GROUNDED ELECTRODE CONDUCTOR	--	--	GROUNDING ELECTRODE	MAIN SERVICE FUSED DISCONNECT GROUNDING	--	#1/0 CU GND.
100	SERVICE ENTRANCE	480V	400A	UTILITY POWER SERVICE	METER DISCONNECT		3#500MCM, 1/0 NEUT. #2 GND. 4"C.
100A	SERVICE POWER	480V	400A	SERVICE DISCONNECT SWITCH	ATS	--	3#500MCM, 1/0 NEUT. #2 GND. 4"C.
100B	EMERGENCY POWER	480V	400A	GENERATOR	ATS	--	3#500MCM, 1/0 NEUT. #2 GND. 4"C.
100C	ELECTRICAL POWER	480V	400A	ATS	MCC	--	3#500MCM, 1/0 NEUT. #2 GND. 4"C.
100D	GENERATOR AUX. POWER	120/240V	50A	GENERATOR	LIGHTING PANEL	--	3#4 AWG, #8 GND. 1-1/2"C.
100E	GENERATOR CONTROLS	24VDC	--	GENERATOR	ATS	--	6#14 AWG, #14 GND. 3/4"C.
100F	NORMAL/GENERATOR POWER STATUS	24VDC	--	ATS	CONTROL PANEL	--	4#14 AWG, #14 GND. 3/4"C.
100G	GENERATOR ALARM SIGNALS	24VDC	--	GENERATOR	CONTROL PANEL	--	16#14 AWG, #14 GND. 1"C.
101	GROUND ELECTRODE CONDUCTOR	--	--	CONTROL PANEL	GROUND FIELD	--	#1/0 CU GND.
105	COMMUNICATION	--	--	COMMUNICATION POLE	CONTROL PANEL	--	1-1/2"C. CAT 5E
200	PUMP NO. 1 POWER	480V	15 HP	PUMP NO.1	PUMP NO.1 JUNCTION BOX	--	MANUFACTURER'S CABLE IN 2-1/2" CONDUIT
201	PUMP NO. 1 CONTROLS	120V	--	PUMP NO.1	PUMP NO.1 JUNCTION BOX	--	MANUFACTURER'S CABLE IN 2-1/2" CONDUIT
202	PUMP NO. 1 POWER	480V	15 HP	PUMP NO. 1 JUNCTION BOX	PUMP STARTER	--	3#6 AWG, #10 GND. 1"C.
203	COMBINED PUMP CONTROLS	120V	--	PUMP NO.1 JUNCTION BOX	PUMP NO.1 JUNCTION BOX	COMBINED PUMP 1 & 2 CONTROLS	COMBINE 200 & 300 TAG WIRING, 8#14, 1"C.
300	PUMP NO. 2 POWER	480V	15 HP	PUMP NO.2	PUMP NO.2 JUNCTION BOX	--	MANUFACTURER'S CABLE IN 2-1/2" CONDUIT
301	PUMP NO. 2 CONTROLS	120V	--	PUMP NO.2	PUMP NO.2 JUNCTION BOX	--	MANUFACTURER'S CABLE IN 2-1/2" CONDUIT
302	PUMP NO. 2 POWER	480V	15 HP	PUMP NO. 2 JUNCTION BOX	PUMP STARTER	--	3#6 AWG, #10 GND. 1"C.
500	LIGHTING TRANSFORMER PRIMARY FEEDER	480V	70A	CONTROL PANEL	LIGHTING TRANSFORMER PRIMARY		2#4 AWG, #8 GND. 1"C.
501	LIGHTING PANEL GROUND	--	--	LIGHTING PANEL	GROUND FIELD	--	#8 GND., 1"C.
502	LIGHTING PANEL FEEDER	120/240V	--	LIGHTING TRANSFORMER	LIGHTING PANEL	--	3#1 AWG, #6 GND. 1-1/2"C.
900	INTRUSION ALARM	24VDC	--	MOTION SWITCH	CONTROL PANEL	--	2#14, 3/4"C.
1000	LEVEL TRANSMITTER	24VDC	--	TRANSMITTER JUNCTION BOX	TRANSMITTER JUNCTION BOX	--	MANUFACTURER'S CABLE IN 2-1/2" CONDUIT
1001	LEVEL TRANSMITTER	24VDC	--	TRANSMITTER JUNCTION BOX	TRANSMITTER JUNCTION BOX	--	MANUFACTURER'S CABLE IN 2-1/2" CONDUIT
1002	COMBINED LEVEL TRANSMITTERS & FLOAT SWITCH	24VDC	--	CONTROL PANEL	TRANSMITTER JUNCTION BOX	--	2-TRI, 4#14, 2"C.
1003	WELL FLOAT SWITCHES	24VDC	--	TRANSMITTER JUNCTION BOX	FLOAT SWITCH NO.1 & NO.2	--	MANUFACTURER'S CABLE IN 2-1/2" CONDUIT
1100	120VAC FOR RECEPTACLE	--	--	LIGHTING PANEL	RECEPTACLE NEXT TO TRANSMITTER J-BOX	--	2#12, #12G, 1"C.
1200	120VAC FOR RECEPTACLE	--	--	LIGHTING PANEL	RECEPTACLE ON GENERATOR PLATFORM	--	4#12, #12G, 1"C.
1300	SITE LIGHTING	120VAC	--	LIGHTING PANEL	LIGHT SWITCH	--	2#12, #12G, 1"C.
1300A	SITE LIGHTING	120VAC	--	LIGHTING SWITCH	SITE LIGHTS	--	2#12, #12G, 1"C.

NOTES BY SYMBOL "⟨#⟩":

⟨1⟩ REFER TO SPEC SECTION 16120 FOR CONDUCTOR COLOR CODE.

NO.	DATE	REVISION	APP.
	MM/DD/YY	BRIEF DESCRIPTION	XXX
	MM/DD/YY	BRIEF DESCRIPTION	XXX
	MM/DD/YY	BRIEF DESCRIPTION	XXX

RPS A TETRA TECH COMPANY
Texas PE Firm Reg. #F-929
575 N. Dairy Ashford, Suite 700,
Houston, Texas 77079
T +1 281 589 7257
E usinfrastructure@rpsgroup.com

SURVEYED BY:
FB NO. F-4578

FOR INTERIM REVIEW ONLY NOT INTENDED FOR PERMIT, BIDDING OR CONSTRUCTION PURPOSES.
ENGINEER:
HOSS FOROUZAN
P.E. SERIAL NO.77748
03/30/2026

CITY OF HOUSTON
HOUSTON PUBLIC WORKS

RECONSTRUCTION & REHABILITATION
COH LIFT STATIONS
M.C. MUD #58
LIFT STATION
ELECTRICAL CONDUIT SCHEDULE

WBS NUMBER	FOR CITY OF HOUSTON USE ONLY
R-000267-00178-3	
DRAWING SCALE	
AS NOTED	
CITY OF HOUSTON PM	
TAHA LOTIA	
SHEET NO. 176 OF 268	

MC58-E-10

PLOTTED: 3/27/2026 11:47 AM
FILE PATH: O:\H8109_Lift Station Rehabilitation And Reconstruction (Tetratech)\6 Drawings\Electrical\Working\M.C. MUD #58\MC MUD_E-10.dwg PLOT STYLE: GAI.ctb

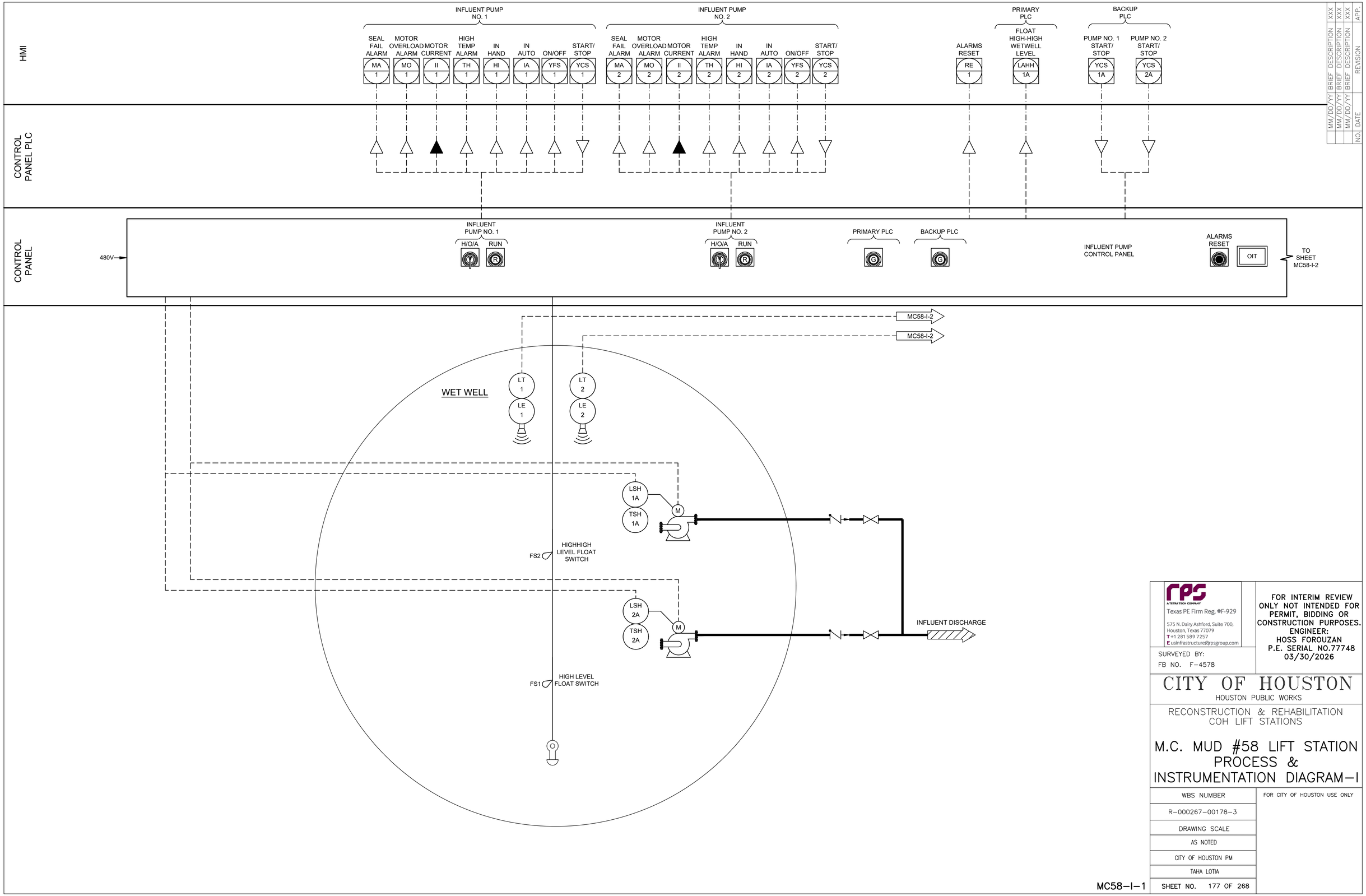

NO.	DATE	REVISION	APP.
	MM/DD/YY	BRIEF DESCRIPTION	XXX
	MM/DD/YY	BRIEF DESCRIPTION	XXX
	MM/DD/YY	BRIEF DESCRIPTION	XXX

rps
A TETRA TECH COMPANY
Texas PE Firm Reg. #F-929
575 N. Dairy Ashford, Suite 700, Houston, Texas 77079
T +1 281 589 7257
E usinfrastructure@rpsgroup.com

FOR INTERIM REVIEW ONLY NOT INTENDED FOR PERMIT, BIDDING OR CONSTRUCTION PURPOSES.
ENGINEER:
HOSS FOROUZAN
P.E. SERIAL NO.77748
03/30/2026

SURVEYED BY:
FB NO. F-4578

CITY OF HOUSTON
HOUSTON PUBLIC WORKS

RECONSTRUCTION & REHABILITATION
COH LIFT STATIONS

M.C. MUD #58 LIFT STATION PROCESS & INSTRUMENTATION DIAGRAM-I

WBS NUMBER	FOR CITY OF HOUSTON USE ONLY
R-000267-00178-3	
DRAWING SCALE	
AS NOTED	
CITY OF HOUSTON PM	
TAHA LOTIA	
SHEET NO. 177 OF 268	

MC58-I-1

PLOTTED: 3/27/2026 11:47 AM

FILE PATH: O:\H8109_Lift Station Rehabilitation And Reconstruction (Tetratech)\6 Drawings\Instrumentation And Control\Working\M.C. MUD #58\H8109_MUD-I-01.dwg

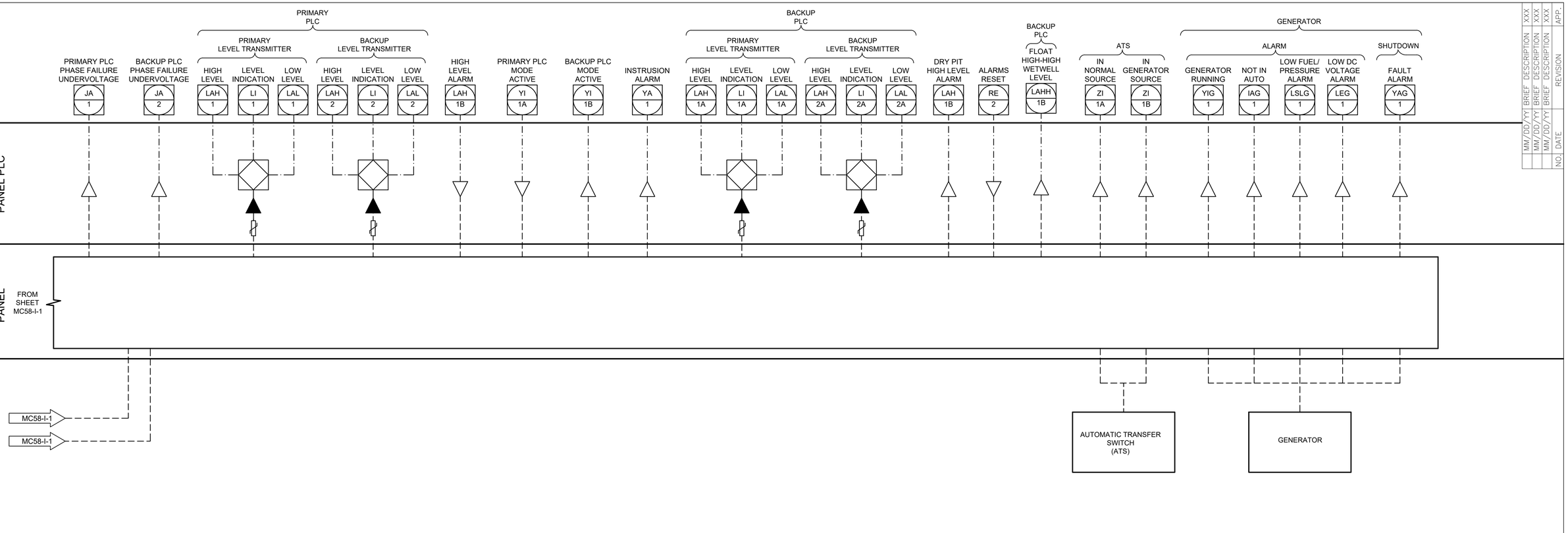

NO.	DATE	REVISION DESCRIPTION	APP.
	MM/DD/YY	BRIEF DESCRIPTION	XXX
	MM/DD/YY	BRIEF DESCRIPTION	XXX
	MM/DD/YY	BRIEF DESCRIPTION	XXX

A TETRA TECH COMPANY
Texas PE Firm Reg. #F-929
575 N. Dairy Ashford, Suite 700,
Houston, Texas 77079
T +1 281 589 7257
E usinfrastructure@rpsgroup.com

SURVEYED BY:
FB NO. F-4578

FOR INTERIM REVIEW ONLY NOT INTENDED FOR PERMIT, BIDDING OR CONSTRUCTION PURPOSES.
ENGINEER:
HOSS FOROUZAN
P.E. SERIAL NO.77748
03/30/2026

CITY OF HOUSTON
HOUSTON PUBLIC WORKS

RECONSTRUCTION & REHABILITATION
COH LIFT STATIONS

M.C. MUD #58 LIFT STATION PROCESS & INSTRUMENTATION DIAGRAM–II

WBS NUMBER	FOR CITY OF HOUSTON USE ONLY
R-000267-00178-3	
DRAWING SCALE	
AS NOTED	
CITY OF HOUSTON PM	
TAHA LOTIA	
SHEET NO. 178 OF 268	

MC58–I–2

PLOTTED: 3/27/2026 11:47 AM

FILE PATH: O:\H8109_Lift Station Rehabilitation And Reconstruction (Tetratech)\6 Drawings\Instrumentation And Control\Working\M.C. MUD #58 LS PID-II.dwg

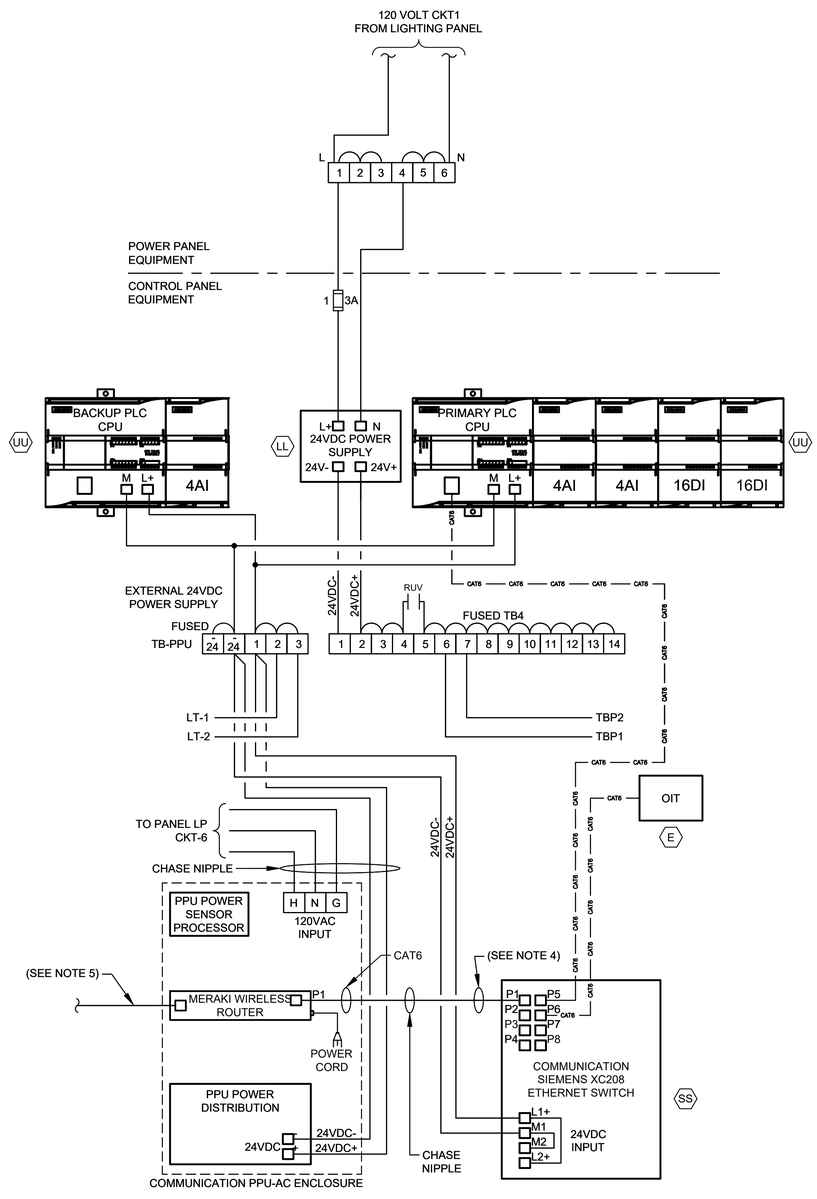

CONTROL POWER &
COMMUNICATIONS WIRING

DIAGRAM

NTS

(SEE NOTE 2 & 6)

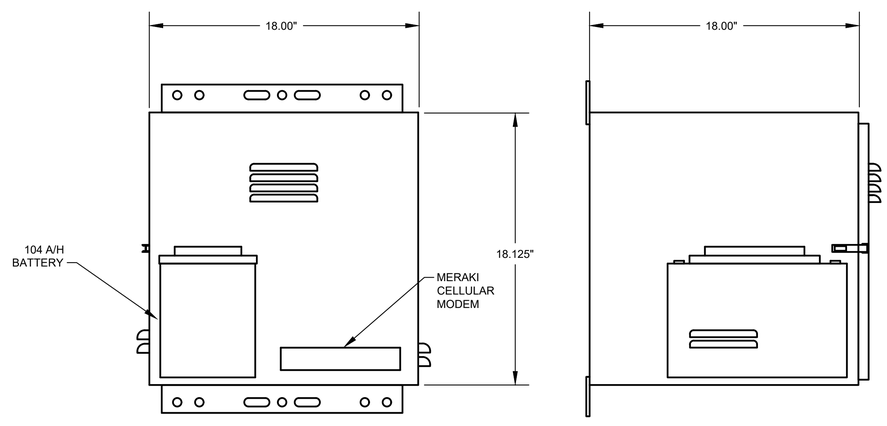

PPU-AC ENCLOSURE
FRONT VIEW

PPU-AC ENCLOSURE
SIDE VIEW

PPU-AC
CONTROL ENCLOSURE

ELEVATION

NTS

(SEE NOTE 7)

NOTES:

1. FOR DESCRIPTION AND RATINGS OF ITEMS INDICATED WITH ITEM TAG, SEE DEVICE RATINGS SCHEDULE.
2. REFER TO SPEC SECTION 16120 FOR CONDUCTOR COLOR CODE.
3. THE PLC POWER SUPPLY SHALL FEED THE 24VDC I/O.
4. ETHERNET CABLE FOR MERAKI CELLULAR ROUTER (P1).
5. CAT6 POE CABLE TO RADIO.
6. COMMUNICATION PPU-AC & SCADA SHALL BE PROVIDED BY CONTRACTOR INCLUDING TO RUN CONDUITS & WIRES.
7. COORDINATE WITH VENDOR TO PROVIDE PROPER VENTILATION WHERE APPLICABLE.

GENERAL NOTES:

1. NO ELECTRICAL MATERIAL, APPARATUS, DEVICES, APPLIANCES, FIXTURES, OR EQUIPMENT SHALL BE SOLD OR INSTALLED IN THE CITY UNLESS THEY ARE IN CONFORMANCE WITH THE PROVISIONS OF SECTION 508 CITY OF HOUSTON ELECTRICAL CODE, THE LAWS OF THE STATE OF TEXAS AND ANY APPLICABLE RULES AND REGULATIONS ISSUED UNDER THE AUTHORITY OF THE STATE STATUES. THE MAKER'S NAME, TRADEMARK, OR OTHER IDENTIFICATION SYMBOL SHALL BE PLACED ON ALL ELECTRICAL MATERIALS, APPARATUS, DEVICES, APPLIANCES, FIXTURES, AND EQUIPMENT USED OR INSTALLED UNDER THE PROVISIONS OF THIS CODE. ALL ELECTRICAL MATERIALS AND EQUIPMENT SHALL BE LISTED AND LABELED FOR THE INTENDED USE AND SHALL BE INCLUDED IN A LIST PUBLISHED BY AN APPROVAL AGENCY.

NO.	DATE	REVISION	APP.
	MM/DD/YY	BRIEF DESCRIPTION	XXX
	MM/DD/YY	BRIEF DESCRIPTION	XXX
	MM/DD/YY	BRIEF DESCRIPTION	XXX

RPS A TETRA TECH COMPANY
Texas PE Firm Reg. #F-929
575 N. Dairy Ashford, Suite 700,
Houston, Texas 77079
T +1 281 589 7257
E usinfrastructure@rpsgroup.com

SURVEYED BY:

FB NO. F-4578

FOR INTERIM REVIEW ONLY NOT INTENDED FOR PERMIT, BIDDING OR CONSTRUCTION PURPOSES.
ENGINEER:
HOSS FOROUZAN
P.E. SERIAL NO.77748
03/30/2026

CITY OF HOUSTON
HOUSTON PUBLIC WORKS

RECONSTRUCTION & REHABILITATION
COH LIFT STATIONS

M.C. MUD #58 LIFT STATION COMMUNICATIONS DIAGRAM

WBS NUMBER	FOR CITY OF HOUSTON USE ONLY
R-000267-00178-3	
DRAWING SCALE	
AS NOTED	
CITY OF HOUSTON PM	
TAHA LOTIA	
SHEET NO. 179 OF 268	

MC58-I-3

PLOTTED: 3/27/2026 11:47 AM
FILE PATH: O:\H8109_Lift Station Rehabilitation And Reconstruction (Tetratech)\6 Drawings\Instrumentation And Control\Working\M.C. MUD #58 LIFT STATION COMMUNICATIONS DIAGRAM.dwg

EQUIPMENT AND DEVICE SCHEDULE		
ITEM	QUANTITY	DESCRIPTION
A	1	PANEL BOARD, 120/240V, 1 PHASE, 3 WIRE, 100A, 12 CKTS
B	2	FULL VOLTAGE, NON-REVERSING, SINGLE SPEED, AUTOMATIC MOTOR STARTER W/120 VOLT CONTROL COIL, NEMA SIZE AS SCHEDULED.
C	2	TIME DELAY RELAY WITH THREE FORM C CONTACTS, 120VAC COIL AND 11 PIN SOCKET BASE.
D	1	SINGLE CHANNEL INTRINSICALLY SAFE RELAY
E	1	PROGRAMMING SCREEN (OIT)
F	2	HAND-OFF-AUTO SWITCH, 3 POSITION, HEAVY-DUTY, OILTIGHT WITH 2 SETS OF CONTACT BLOCKS (PUMP CONTROL)
G	2	INDICATING LIGHT, HEAVY DUTY, OILTIGHT, RED, 24 VDC, LED, WITH "RUN" LEGEND
H	1	PERPETUAL POWER UNIT (PPU)
I	1	PUMP ALARM RESET PUSHBUTTON
J	2	SWITCH FOR CABINET LIGHT, 120V, 20A, SPST
K	3	DUPLEX RECEPTACLE, 120V, 20A, 2 WIRE, GROUNDED
L	2	24" LED STRIP LIGHT 120V SUITABLE FOR ZERO DEGREE OPERATION.
M	1	SURGE PROTECTOR - INCOMING POWER
N	*	NOT USED.
P	2	CURRENT TRANSFORMER, RATIO AS SCHEDULED W/4-20mA OUTPUT.
Q	12	TERMINAL BLOCKS, SIZED FOR MOTOR POWER REQUIREMENTS
R	*	RELAY WITH THREE FORM C CONTACTS, AND 11 PIN SOCKET BASE
S	*	NOT USED.
T	*	NAMEPLATES, SEE SPECIFICATIONS (SEE NAMEPLATE SCHEDULE)
U	2	SOLID STATE MOTOR OVERLOAD RELAY
V	6	FUSE HOLDER & FUSES - PHASE FAILURE
W	1	NEMA 3R GASKETED ALUMINUM ENCLOSURE WITHOUT VENTS 72"H x 48"W x 36"D
X	1	DOOR MOUNTED ROTARY HANDLE DISCONNECT SWITCH (SUITABLE FOR ENVIRONMENT)
Y	1	THERMAL-MAGNETIC MOLDED CASE MAIN CIRCUIT BREAKER, SIZE AS SCHEDULED
Z	2	ADJUSTABLE INSTANTENOUS TRIP MOTOR CIRCUIT PROTECTOR, SIZE AS SCHEDULED
AA	*	TERMINAL BLOCKS
BB	2	EXTERNAL OVERLOAD RESET PUSHBUTTON MECHANISM
CC	2	ANALOG I/O SURGE SUPPRESSOR
DD	1	WIRE DUCT 2" WIDE x 2" DEEP MINIMUM
EE	1	THERMAL-MAGNETIC MODLED CASE CIRCUIT BREAKER FOR LIGHTING TRANSFORMER, SIZE AS SCHEDULED
FF	1	GROUND BUS
GG	1	25 KVA, 480 - 240/120V,1ϕ, 3W DRY TYPE NEMA 3R ENCLOSURE TRANSFORMER (PAD MOUNTED)
HH	*	NOT USED.
II	1	120VAC - 24VAC POWER SUPPLY (AS REQUIRED)
JJ	11	CARTRIDGE FUSES & FUSE HOLDER
KK	8	QUARTER TURN CAPTIVE DOOR CLOSURE
LL	1	120VAC - 24VDC PLC POWER SUPPLY 5A
MM	2	MOTION SWITCH
NN	*	NOT USED
PP	2	INDICATING LED LIGHT, HEAVY DUTY, OILTIGHT, GREEN, 24 VDC, LED WITH " PRIMARY PLC" & "BACKUP PLC" LEGEND
QQ	*	NOT USED
RR	*	NOT USED
SS	1	COMMUNICATION ETHERNET SWITCH
TT	1	POWER SURGE PROTECTOR - CONTROL POWER
UU	2	PROGRAMMABLE LOGIC CONTROLLER WITH EXPANSION UNIT
VV	1	PHASE AND UNDER VOLTAGE MONITOR
WW	*	FUSED TERMINAL BLOCKS
XX	2	PUMP PROTECTION MODULE RATED FOR CLASS I, DIVISION I
YY	2	ANALOG SIGNAL ISOLATOR
ZZ	-	NOT USED
AB	-	NOT USED.
AC	1	POWER DISTRIBUTION BLOCK
AD	1	NEUTRAL LUG
AE	1	6" EXHAUST FAN, 120V, STAINLESS FILTERS & GRILL PACKAGE W/BUG GUARD
AF	1	T-STAT FOR EXHAUST FAN

* - AS SCHEDULED

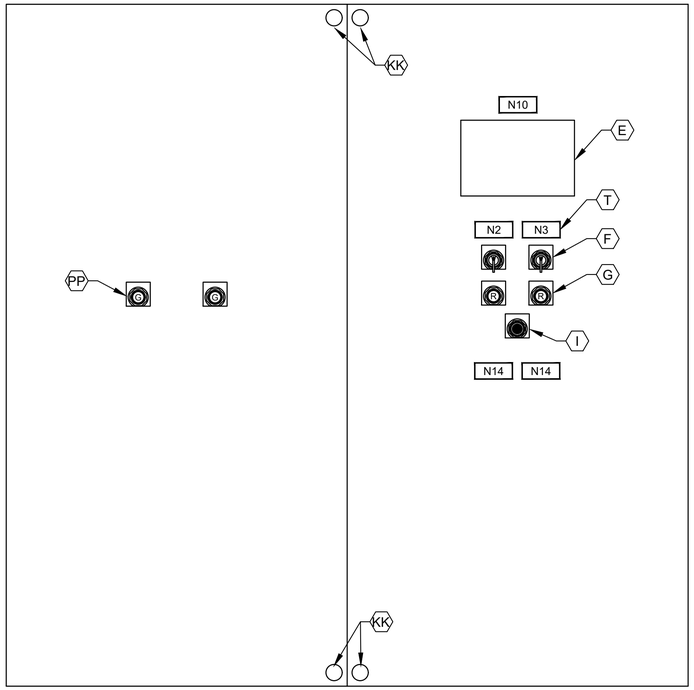

CONTROL PANEL FRONT INNER DOOR

ELEVATION

NTS

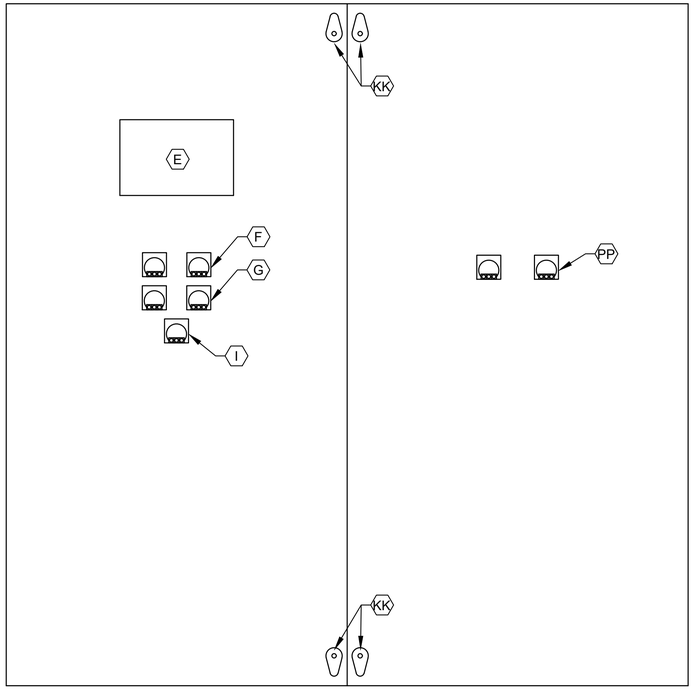

CONTROL PANEL BACK INNER DOOR

ELEVATION

NTS

NOTES:

1. NAMEPLATES SHALL BE MOUNTED TO PANELS USING STAINLESS STEEL HARDWARE.
2. REFER SPECIFICATIONS FOR ALL PANEL COMPONENTS.

GENERAL NOTES:

1. NO ELECTRICAL MATERIAL, APPARATUS, DEVICES, APPLIANCES, FIXTURES, OR EQUIPMENT SHALL BE SOLD OR INSTALLED IN THE CITY UNLESS THEY ARE IN CONFORMANCE WITH THE PROVISIONS OF SECTION 508 CITY OF HOUSTON ELECTRICAL CODE, THE LAWS OF THE STATE OF TEXAS AND ANY APPLICABLE RULES AND REGULATIONS ISSUED UNDER THE AUTHORITY OF THE STATE STATUES. THE MAKER'S NAME, TRADEMARK, OR OTHER IDENTIFICATION SYMBOL SHALL BE PLACED ON ALL ELECTRICAL MATERIALS, APPARATUS, DEVICES, APPLIANCES, FIXTURES, AND EQUIPMENT USED OR INSTALLED UNDER THE PROVISIONS OF THIS CODE. ALL ELECTRICAL MATERIALS AND EQUIPMENT SHALL BE LISTED AND LABELED FOR THE INTENDED USE AND SHALL BE INCLUDED IN A LIST PUBLISHED BY AN APPROVAL AGENCY.

NO.	DATE	REVISION	APP.
	MM/DD/YY	BRIEF DESCRIPTION	XXX
	MM/DD/YY	BRIEF DESCRIPTION	XXX
	MM/DD/YY	BRIEF DESCRIPTION	XXX

A TETRA TECH COMPANY
Texas PE Firm Reg. #F-929
575 N. Dairy Ashford, Suite 700,
Houston, Texas 77079
T +1 281 589 7257
E usinfrastructure@rpsgroup.com

SURVEYED BY:

FB NO. F-4578

FOR INTERIM REVIEW ONLY NOT INTENDED FOR PERMIT, BIDDING OR CONSTRUCTION PURPOSES.
ENGINEER:
HOSS FOROUZAN
P.E. SERIAL NO.77748
03/30/2026

CITY OF HOUSTON

HOUSTON PUBLIC WORKS

RECONSTRUCTION & REHABILITATION
COH LIFT STATIONS

M.C. MUD #58 LIFT STATION CONTROL CABINET EQUIPMENT LAYOUT & SCHEDULE

WBS NUMBER	FOR CITY OF HOUSTON USE ONLY
R-000267-00178-3	
DRAWING SCALE	
AS NOTED	
CITY OF HOUSTON PM	
TAHA LOTIA	
SHEET NO. 180 OF 268	

MC58-I-4

PLOTTED: 3/27/2026 11:47 AM
FILE PATH: O:\H8109_Lift Station Rehabilitation And Reconstruction (Tetratech)\6 Drawings\Instrumentation And Control\Working\M.C. MUD #58 LIFT STATION CONTROL CABINET EQUIPMENT LAYOUT & SCHEDULE.dwg

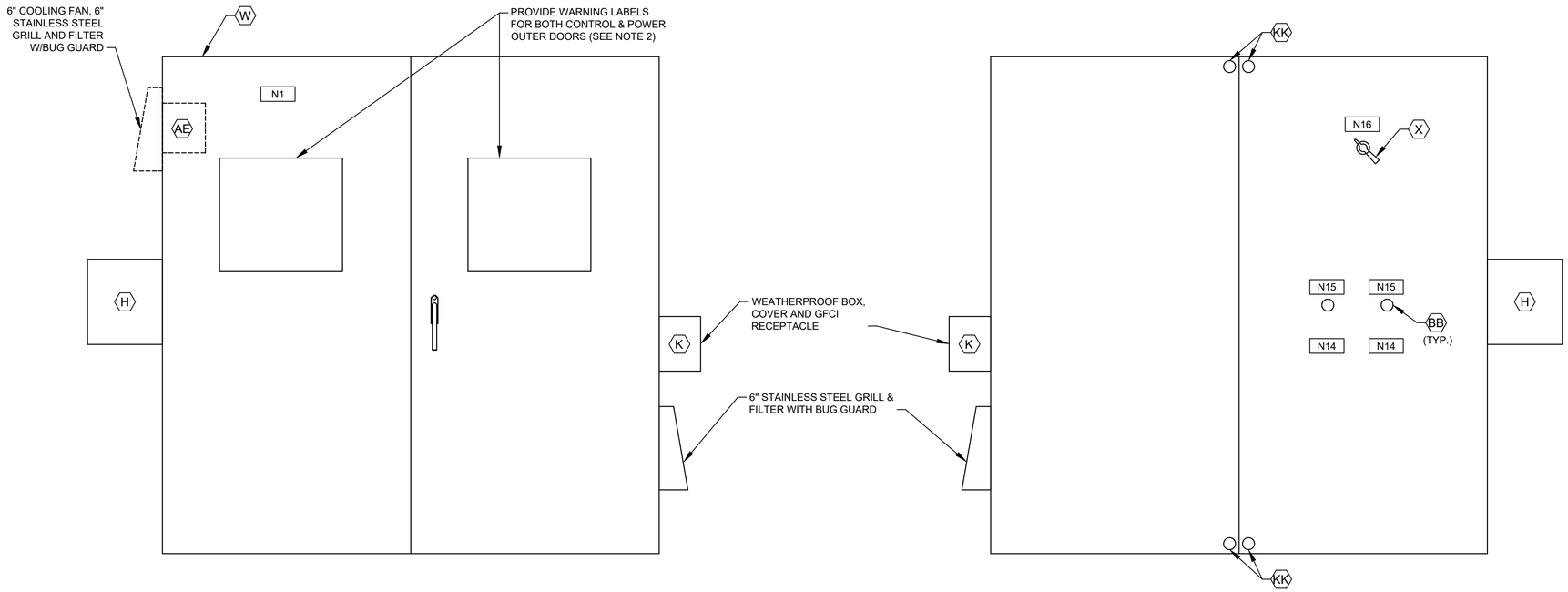

CONTROL CABINET (CONTROL SIDE)
OUTER DOOR

ELEVATION

NTS

CONTROL CABINET (POWER SIDE)
INNER DOOR

ELEVATION

NTS
(SEE NOTE 1)

NAMEPLATE SCHEDULE

DESIGNATION	ENGRAVED	DESIGNATION	ENGRAVED
N1	PUMP STATION DESIGNATION	N8	NOT USED.
N2	PUMP NO. 1	N9	NOT USED.
N3	PUMP NO. 2	N10	PROGRAMMING SCREEN
N4	NOT USED.	N11	NOT USED.
N5	NOT USED.	N12	PRIMARY PLC
N6	NOT USED.	N13	BACKUP PLC
N7	NOT USED.	N14	MOTOR DATA HORSEPOWER (OUTPUT) ---------- RPM AT FULL LOAD ---------- TIME RATING ---------- FREQUENCY ---------- NUMBER OF PHASES ---------- MODEL NUMBER ---------- RATED VOLTAGE ---------- SERVICE FACTOR ---------- FULL LOAD AMPS ---------- INSULATION CLAS ---------- NEMA DESIGN LETTER ---------- TEMPERATURE RISE ---------- NEMA FRAME SIZE ---------- DATE OF MANUFACTURE ---------- THERMO PROTECTION (IF REQUIRED) -- MOISTURE PROTECTION (IF REQUIRED)-
		N15	EXTERNAL OVERLOAD RESET PUSH BUTTON MECHANISM
		N16	MAIN BREAKER

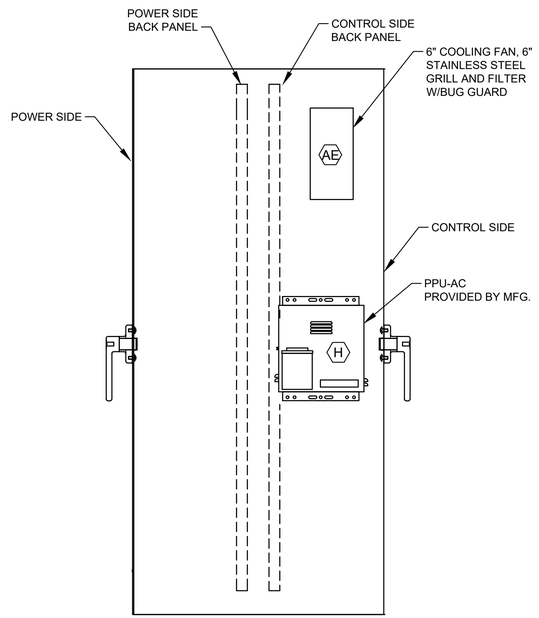

CONTROL CABINET (LEFT SIDE VIEW)

ELEVATION

NTS

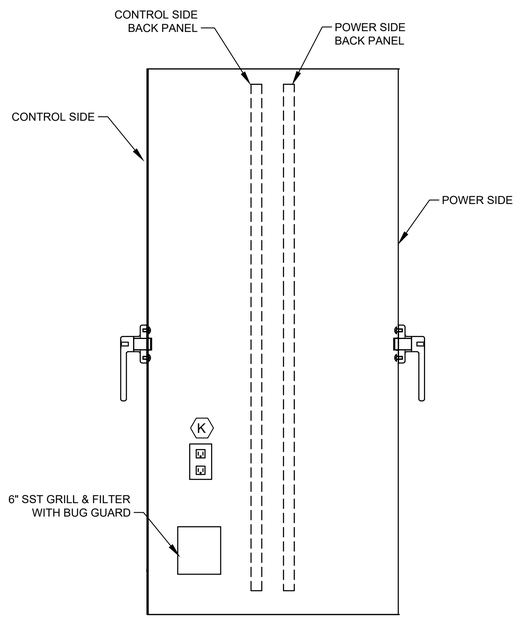

CONTROL CABINET (RIGHT SIDE VIEW)

ELEVATION

NTS

NOTES:

1. SEE SHEET MC58-I-4 FOR EQUIPMENT SCHEDULE.
2. REFER TO NEC SECTIONS 110.16 & 110.21

GENERAL NOTES:

1. NO ELECTRICAL MATERIAL, APPARATUS, DEVICES, APPLIANCES, FIXTURES, OR EQUIPMENT SHALL BE SOLD OR INSTALLED IN THE CITY UNLESS THEY ARE IN CONFORMANCE WITH THE PROVISIONS OF SECTION 508 CITY OF HOUSTON ELECTRICAL CODE, THE LAWS OF THE STATE OF TEXAS AND ANY APPLICABLE RULES AND REGULATIONS ISSUED UNDER THE AUTHORITY OF THE STATE STATUES. THE MAKER'S NAME, TRADEMARK, OR OTHER IDENTIFICATION SYMBOL SHALL BE PLACED ON ALL ELECTRICAL MATERIALS, APPARATUS, DEVICES, APPLIANCES, FIXTURES, AND EQUIPMENT USED OR INSTALLED UNDER THE PROVISIONS OF THIS CODE. ALL ELECTRICAL MATERIALS AND EQUIPMENT SHALL BE LISTED AND LABELED FOR THE INTENDED USE AND SHALL BE INCLUDED IN A LIST PUBLISHED BY AN APPROVAL AGENCY.

NO.	DATE	REVISION	APP.
	MM/DD/YY	BRIEF DESCRIPTION	XXX
	MM/DD/YY	BRIEF DESCRIPTION	XXX
	MM/DD/YY	BRIEF DESCRIPTION	XXX

RPS A TETRA TECH COMPANY
Texas PE Firm Reg. #F-929
575 N. Dairy Ashford, Suite 700,
Houston, Texas 77079
T +1 281 589 7257
E usinfrastructure@rpsgroup.com

SURVEYED BY:
FB NO. F-4578

FOR INTERIM REVIEW ONLY NOT INTENDED FOR PERMIT, BIDDING OR CONSTRUCTION PURPOSES.
ENGINEER:
HOSS FOROUZAN
P.E. SERIAL NO.77748
03/30/2026

CITY OF HOUSTON
HOUSTON PUBLIC WORKS

RECONSTRUCTION & REHABILITATION
COH LIFT STATIONS

M.C. MUD #58 LIFT STATION CONTROL CABINET EQUIPMENT LAYOUT–I

WBS NUMBER	FOR CITY OF HOUSTON USE ONLY
R–000267–00178–3	
DRAWING SCALE	
AS NOTED	
CITY OF HOUSTON PM	
TAHA LOTIA	
SHEET NO. 181 OF 268	

MC58–I–5

PLOTTED: 3/27/2026 11:47 AM
FILE PATH: O:\H8109_Lift Station Rehabilitation And Reconstruction (Tetratech)\6 Drawings\Instrumentation And Control\Working\M.C. MUD #58 LIFT STATION CONTROL CABINET EQUIPMENT LAYOUT-I.dwg

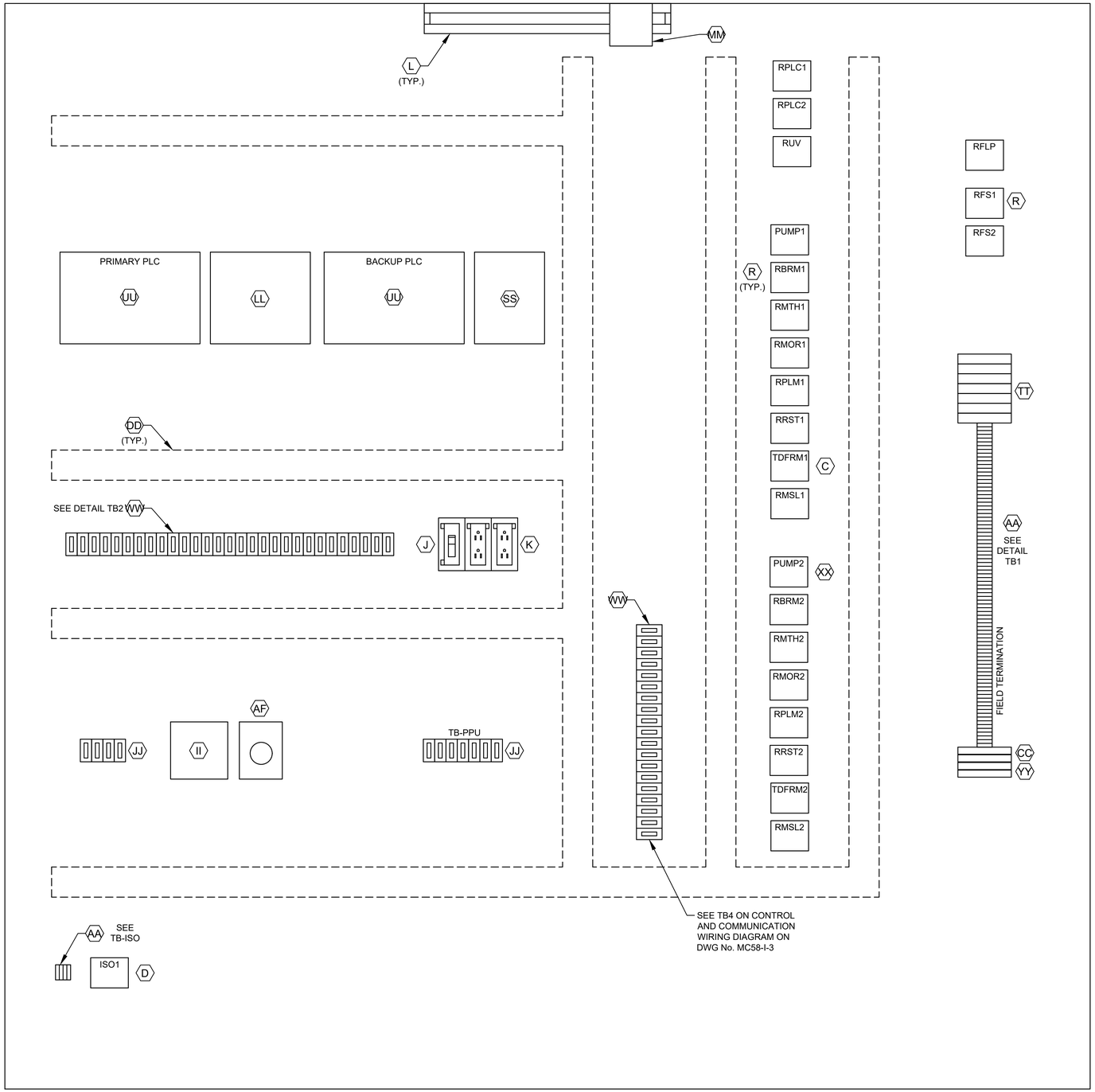

CONTROL PANEL
ELEVATION

DETAIL TB1
L1A
L1N
SPARE
3
3N
49
50
51
52
53
54
1004
1
24V-
24V-
1002
2
11
1001
1001A
12
1003
1003A
1002
1004
18
3N
19
20
36
36N
41
42
43
44
SPARE
L1A
L1N
103
104
105
106
107
108
110
113
115
116
119
SPARE
203
204
205
206
207
208
210
213
215
216
219

ALL L AND N FOR EACH PUMP CONTROL TO BE FUSED

DETAIL TB2
36A
37A
50
52
54
52A
54A
L+
M
35B
38B
41B
47B
13B
13AB
13GB
L+
M
14B
14AB
14GB
L+
M
13
13A
13G
14
14A
14G
SPARE
18
SPARE
28
29
32
35B
33
42
44
SPARE
103
104
115
109
110
118
120
121
122
123
SPARE
209
210
211
218
220
222
223

DETAIL TB-ISO
1500
1501
1503
1504

LEGEND	
TAG	DESCRIPTION
RMTH	MOTOR HIGH TEMPERATURE ALARM RELAY
RPLM	PLC PUMP RUN RELAY
RRST	PUMP RESET AUX RELAY
RPLC	PLC MODE AUX RELAY
RMOR	MOTOR OVERLOAD ALARM RELAY
RBRM	BACKUP SYSTEM RUN RELAY
RUV	UNDER VOLTAGE RELAY
ISO	INTRINSICALLY SAFE RELAY
RFS	PUMP RUN FLOAT SWITCH RELAY
TDFRM	TIMER FLOAT SWITCH RUN RELAY
RMSL	MOTOR SEAL LEAK ALARM RELAY
RFLP	FLOAT LOCKOUT PUMP RELAY

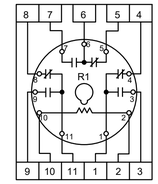

RELAY DETAIL
ITEM R

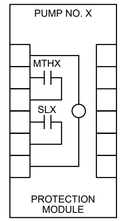

PUMP PROTECTION MODULE
DETAIL, ITEM XX

NOTE: REPLACE "X" WITH APPROPRIATE PUMP NO.

NOTES:

1. SEE SHEET I-095-603 FOR EQUIPMENT SCHEDULE.

NOTES:

1. SEE SHEET MC58-I-4 FOR EQUIPMENT SCHEDULE.

GENERAL NOTES:

1. NO ELECTRICAL MATERIAL, APPARATUS, DEVICES, APPLIANCES, FIXTURES, OR EQUIPMENT SHALL BE SOLD OR INSTALLED IN THE CITY UNLESS THEY ARE IN CONFORMANCE WITH THE PROVISIONS OF SECTION 508 CITY OF HOUSTON ELECTRICAL CODE, THE LAWS OF THE STATE OF TEXAS AND ANY APPLICABLE RULES AND REGULATIONS ISSUED UNDER THE AUTHORITY OF THE STATE STATUES. THE MAKER'S NAME, TRADEMARK, OR OTHER IDENTIFICATION SYMBOL SHALL BE PLACED ON ALL ELECTRICAL MATERIALS, APPARATUS, DEVICES, APPLIANCES, FIXTURES, AND EQUIPMENT USED OR INSTALLED UNDER THE PROVISIONS OF THIS CODE. ALL ELECTRICAL MATERIALS AND EQUIPMENT SHALL BE LISTED AND LABELED FOR THE INTENDED USE AND SHALL BE INCLUDED IN A LIST PUBLISHED BY AN APPROVAL AGENCY.

NO.	DATE	REVISION	APP.
	MM/DD/YY	BRIEF DESCRIPTION	XXX
	MM/DD/YY	BRIEF DESCRIPTION	XXX
	MM/DD/YY	BRIEF DESCRIPTION	XXX

RPS
A TETRA TECH COMPANY
Texas PE Firm Reg. #F-929
575 N. Dairy Ashford, Suite 700,
Houston, Texas 77079
T +1 281 589 7257
E usinfrastructure@rpsgroup.com

SURVEYED BY:
FB NO. F-4578

FOR INTERIM REVIEW ONLY NOT INTENDED FOR PERMIT, BIDDING OR CONSTRUCTION PURPOSES.
ENGINEER:
HOSS FOROUZAN
P.E. SERIAL NO.77748
03/30/2026

CITY OF HOUSTON
HOUSTON PUBLIC WORKS

RECONSTRUCTION & REHABILITATION
COH LIFT STATIONS

M.C. MUD #58 LIFT STATION CONTROL CABINET EQUIPMENT LAYOUT–II

WBS NUMBER	FOR CITY OF HOUSTON USE ONLY
R–000267–00178–3	
DRAWING SCALE	
AS NOTED	
CITY OF HOUSTON PM	
TAHA LOTIA	
SHEET NO. 182 OF 268	

MC58–I–6

PLOTTED: 3/27/2026 11:47 AM

FILE PATH: O:\H8109_Lift Station Rehabilitation And Reconstruction (Tetratech)\6 Drawings\Instrumentation And Control\Working\M.C. MUD #58\MC58-I-6.dwg

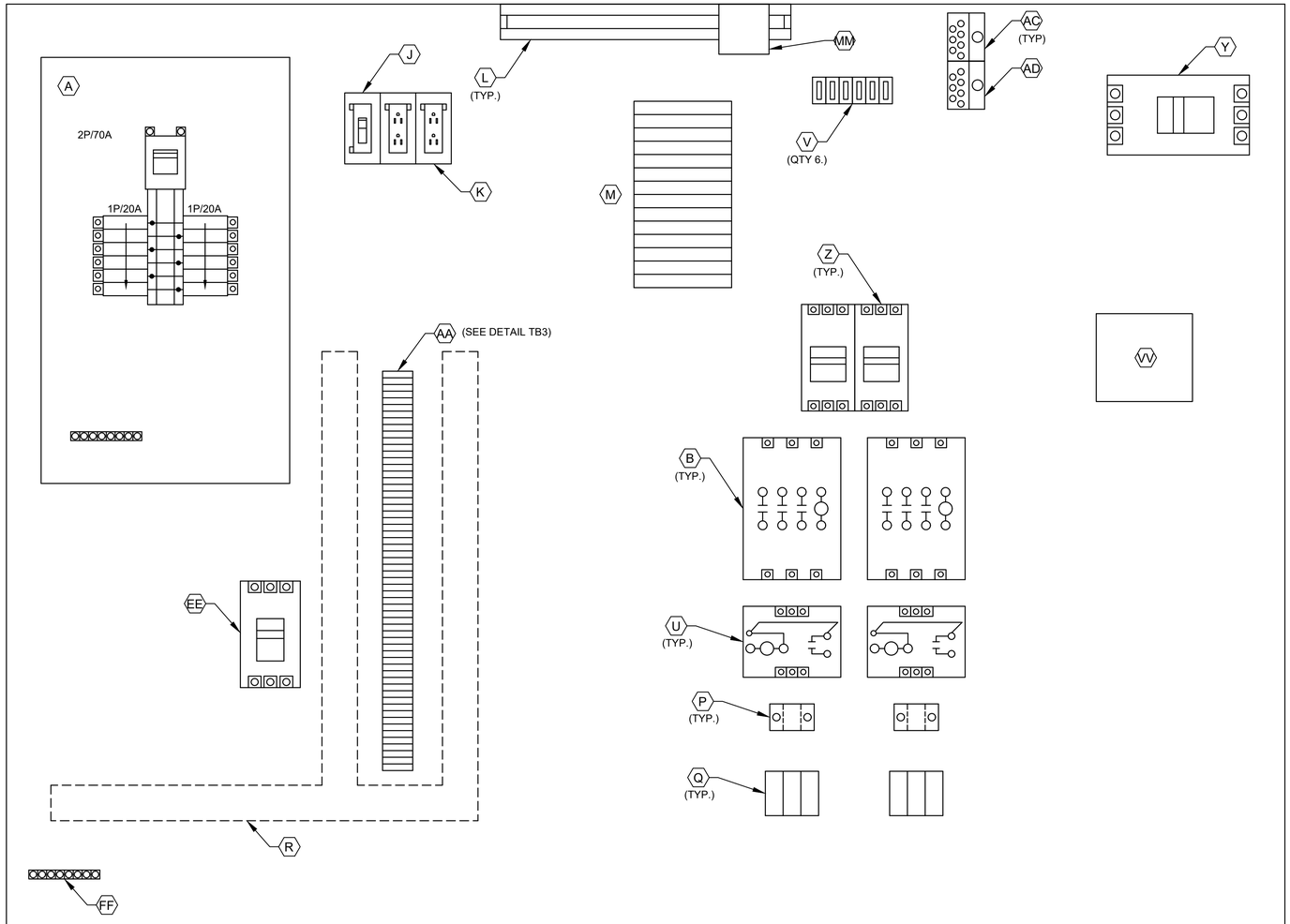

POWER PANEL
ELEVATION

3
18
L1A
L1N
SPARE
SPARE
103
104
105
106
107
108
110
113
115
116
119
SPARE
203
204
205
206
207
208
210
213
215
216
219
SPARE
SPARE
SPARE
SPARE
SPARE
SPARE
SPARE
SPARE
SPARE
SPARE

DETAIL TB3

NOTES:

1. SEE SHEET MC58-I-4 FOR EQUIPMENT SCHEDULE.

GENERAL NOTES:

1. NO ELECTRICAL MATERIAL, APPARATUS, DEVICES, APPLIANCES, FIXTURES, OR EQUIPMENT SHALL BE SOLD OR INSTALLED IN THE CITY UNLESS THEY ARE IN CONFORMANCE WITH THE PROVISIONS OF SECTION 508 CITY OF HOUSTON ELECTRICAL CODE, THE LAWS OF THE STATE OF TEXAS AND ANY APPLICABLE RULES AND REGULATIONS ISSUED UNDER THE AUTHORITY OF THE STATE STATUES. THE MAKER'S NAME, TRADEMARK, OR OTHER IDENTIFICATION SYMBOL SHALL BE PLACED ON ALL ELECTRICAL MATERIALS, APPARATUS, DEVICES, APPLIANCES, FIXTURES, AND EQUIPMENT USED OR INSTALLED UNDER THE PROVISIONS OF THIS CODE. ALL ELECTRICAL MATERIALS AND EQUIPMENT SHALL BE LISTED AND LABELED FOR THE INTENDED USE AND SHALL BE INCLUDED IN A LIST PUBLISHED BY AN APPROVAL AGENCY.

NO.	DATE	REVISION	APP.
	MM/DD/YY	BRIEF DESCRIPTION	XXX
	MM/DD/YY	BRIEF DESCRIPTION	XXX
	MM/DD/YY	BRIEF DESCRIPTION	XXX

RPS
A TETRA TECH COMPANY
Texas PE Firm Reg. #F-929
575 N. Dairy Ashford, Suite 700,
Houston, Texas 77079
T +1 281 589 7257
E usinfrastructure@rpsgroup.com

SURVEYED BY:
FB NO. F-4578

FOR INTERIM REVIEW ONLY NOT INTENDED FOR PERMIT, BIDDING OR CONSTRUCTION PURPOSES.
ENGINEER:
HOSS FOROUZAN
P.E. SERIAL NO.77748
03/30/2026

CITY OF HOUSTON
HOUSTON PUBLIC WORKS

RECONSTRUCTION & REHABILITATION
COH LIFT STATIONS

M.C. MUD #58 LIFT STATION CONTROL CABINET EQUIPMENT LAYOUT-III

WBS NUMBER	FOR CITY OF HOUSTON USE ONLY
R-000267-00178-3	
DRAWING SCALE	
AS NOTED	
CITY OF HOUSTON PM	
TAHA LOTIA	
SHEET NO. 183 OF 268	

MC58-I-7

PLOTTED: 3/27/2026 11:47 AM

FILE PATH: O:\H8109_Lift Station Rehabilitation And Reconstruction (Tetratech)\6 Drawings\Instrumentation And Control\Working\M.C. MUD #58\MC58-I-07.dwg

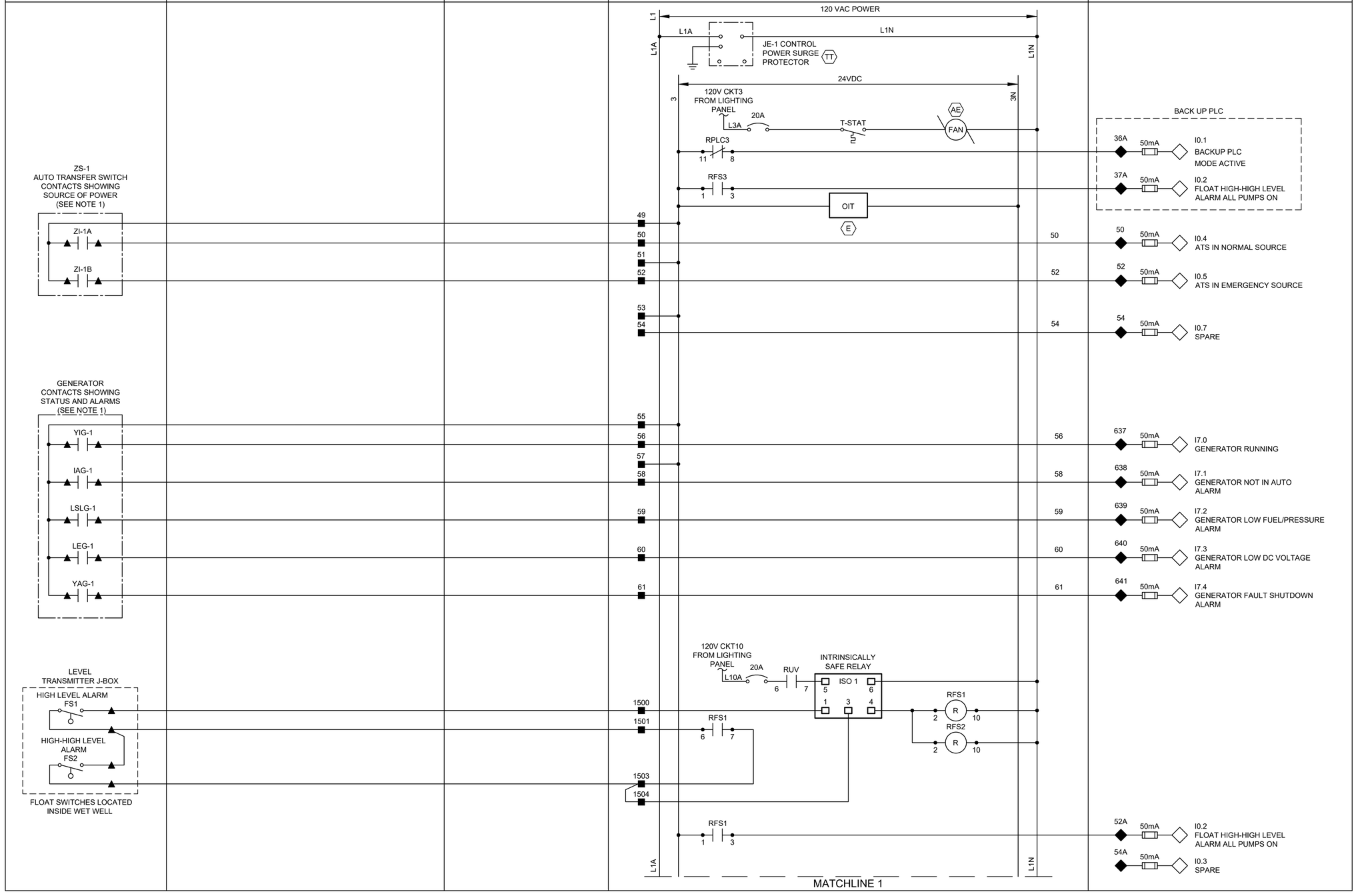

NOTES:

1. PROVIDE AUTO TRANSFER SWITCH DRY CONTACT.
2. ALL FLOAT CONTROL CIRCUIT WIRES COLOR SHALL BE YELLOW.

GENERAL NOTES:

1. NO ELECTRICAL MATERIAL, APPARATUS, DEVICES, APPLIANCES, FIXTURES, OR EQUIPMENT SHALL BE SOLD OR INSTALLED IN THE CITY UNLESS THEY ARE IN CONFORMANCE WITH THE PROVISIONS OF SECTION 508 CITY OF HOUSTON ELECTRICAL CODE, THE LAWS OF THE STATE OF TEXAS AND ANY APPLICABLE RULES AND REGULATIONS ISSUED UNDER THE AUTHORITY OF THE STATE STATUES. THE MAKER'S NAME, TRADEMARK, OR OTHER IDENTIFICATION SYMBOL SHALL BE PLACED ON ALL ELECTRICAL MATERIALS, APPARATUS, DEVICES, APPLIANCES, FIXTURES, AND EQUIPMENT USED OR INSTALLED UNDER THE PROVISIONS OF THIS CODE. ALL ELECTRICAL MATERIALS AND EQUIPMENT SHALL BE LISTED AND LABELED FOR THE INTENDED USE AND SHALL BE INCLUDED IN A LIST PUBLISHED BY AN APPROVAL AGENCY.

LEGEND

- △ DEVICE OR FIELD TERMINAL LOCATED AT MOTOR
- ✳ DEVICE OR FIELD TERMINAL LOCATED REMOTE
- □ DEVICE OR FIELD TERMINAL LOCATED AT MCC/POWER PANEL
- ■ FIELD TERMINAL LOCATED AT CONTROL PANEL
- ▲ REMOTE TERMINAL
- ● DEVICE TERMINAL NO.
- ◆ PLC INTERFACE TERMINAL

MC58-I-8

NO.	DATE	REVISION	APP.
	MM/DD/YY	BRIEF DESCRIPTION	XXX
	MM/DD/YY	BRIEF DESCRIPTION	XXX
	MM/DD/YY	BRIEF DESCRIPTION	XXX

RPS
A TETRA TECH COMPANY
Texas PE Firm Reg. #F-929
575 N. Dairy Ashford, Suite 700,
Houston, Texas 77079
T +1 281 589 7257
E usinfrastructure@rpsgroup.com

SURVEYED BY:
FB NO. F-4578

FOR INTERIM REVIEW ONLY NOT INTENDED FOR PERMIT, BIDDING OR CONSTRUCTION PURPOSES.
ENGINEER:
HOSS FOROUZAN
P.E. SERIAL NO.77748
03/30/2026

CITY OF HOUSTON
HOUSTON PUBLIC WORKS

RECONSTRUCTION & REHABILITATION
COH LIFT STATIONS

M.C. MUD #58 LIFT STATION CONTROL PANEL CONTROL WIRING DIAGRAM-I

WBS NUMBER	FOR CITY OF HOUSTON USE ONLY
R-000267-00178-3	
DRAWING SCALE	
AS NOTED	
CITY OF HOUSTON PM	
TAHA LOTIA	
SHEET NO. 184 OF 268	

PLOTTED: 3/27/2026 11:47 AM

FILE PATH: O:\H8109_Lift Station Rehabilitation And Reconstruction (Tetratech)\6 Drawings\Instrumentation And Control\Working\M.C. MUD #58 LIFT STATION CONTROL WIRING DIAGRAM-I.dwg

FILE PATH: O:\H8109_Lift Station Rehabilitation And Reconstruction (Tetratech)\6 Drawings\Instrumentation And Control\Working\M.C. MUD #58\MC58-I-9.dwg PLOTTED: 3/27/2026 11:47 AM

FIELD		CONTROL PANEL		
		DOOR	INTERIOR PANEL	PLC

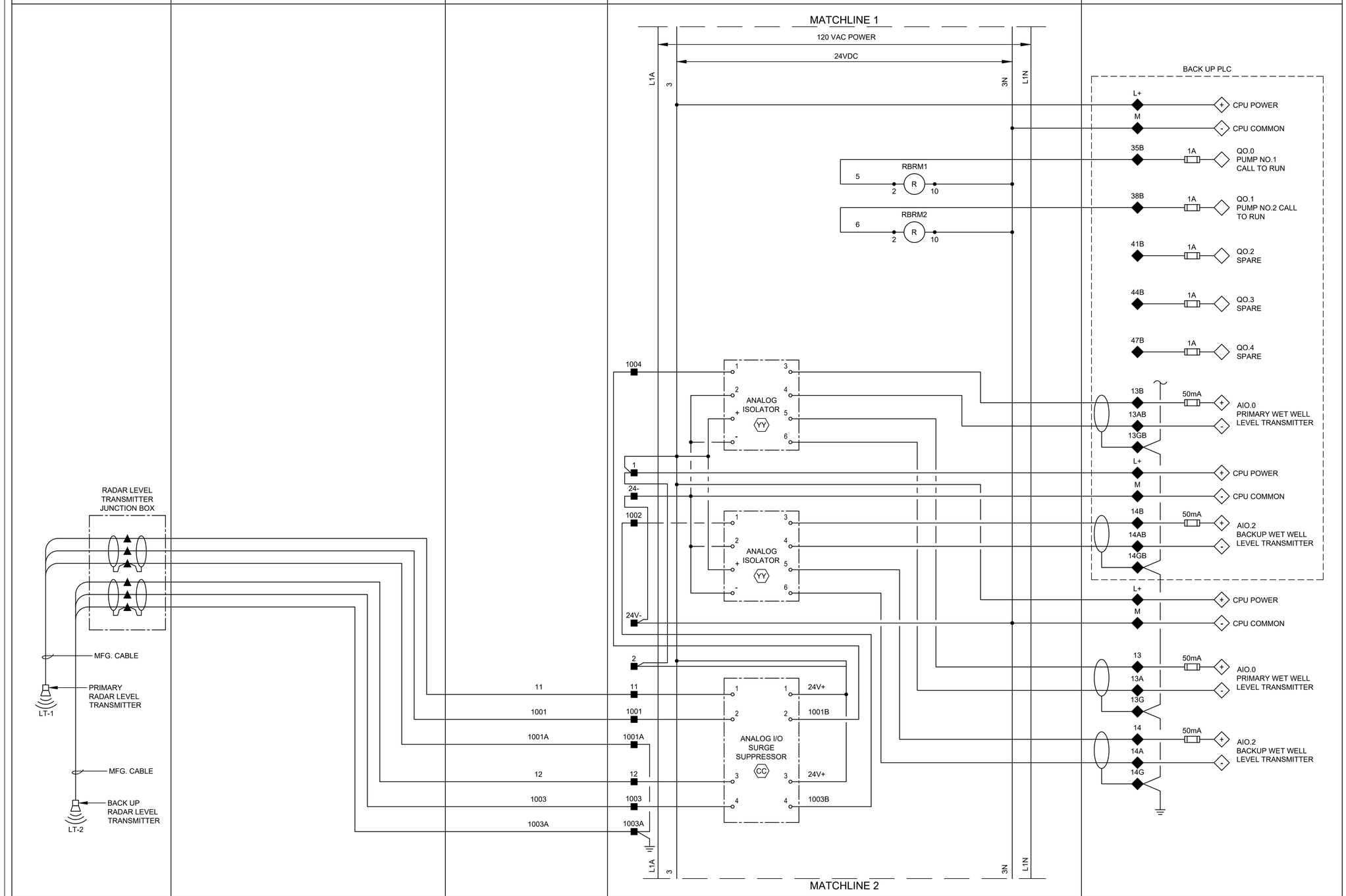

LEGEND

- △ DEVICE OR FIELD TERMINAL LOCATED AT MOTOR
- ✳ DEVICE OR FIELD TERMINAL LOCATED REMOTE
- □ DEVICE OR FIELD TERMINAL LOCATED AT MCC/POWER PANEL
- ■ FIELD TERMINAL LOCATED AT CONTROL PANEL
- ▲ REMOTE TERMINAL
- ● DEVICE TERMINAL NO.
- ◆ PLC INTERFACE TERMINAL

NO.	DATE	REVISION	APP.
	MM/DD/YY	BRIEF DESCRIPTION	XXX
	MM/DD/YY	BRIEF DESCRIPTION	XXX
	MM/DD/YY	BRIEF DESCRIPTION	XXX

GENERAL NOTES:

1. NO ELECTRICAL MATERIAL, APPARATUS, DEVICES, APPLIANCES, FIXTURES, OR EQUIPMENT SHALL BE SOLD OR INSTALLED IN THE CITY UNLESS THEY ARE IN CONFORMANCE WITH THE PROVISIONS OF SECTION 508 CITY OF HOUSTON ELECTRICAL CODE, THE LAWS OF THE STATE OF TEXAS AND ANY APPLICABLE RULES AND REGULATIONS ISSUED UNDER THE AUTHORITY OF THE STATE STATUES. THE MAKER'S NAME, TRADEMARK, OR OTHER IDENTIFICATION SYMBOL SHALL BE PLACED ON ALL ELECTRICAL MATERIALS, APPARATUS, DEVICES, APPLIANCES, FIXTURES, AND EQUIPMENT USED OR INSTALLED UNDER THE PROVISIONS OF THIS CODE. ALL ELECTRICAL MATERIALS AND EQUIPMENT SHALL BE LISTED AND LABELED FOR THE INTENDED USE AND SHALL BE INCLUDED IN A LIST PUBLISHED BY AN APPROVAL AGENCY.

RPS A TETRA TECH COMPANY
Texas PE Firm Reg. #F-929
575 N. Dairy Ashford, Suite 700,
Houston, Texas 77079
T +1 281 589 7257
E usinfrastructure@rpsgroup.com

SURVEYED BY:
FB NO. F-4578

FOR INTERIM REVIEW
ONLY NOT INTENDED FOR
PERMIT, BIDDING OR
CONSTRUCTION PURPOSES.
ENGINEER:
HOSS FOROUZAN
P.E. SERIAL NO.77748
03/30/2026

CITY OF HOUSTON
HOUSTON PUBLIC WORKS

RECONSTRUCTION & REHABILITATION
COH LIFT STATIONS

M.C. MUD #58 LIFT STATION CONTROL PANEL CONTROL WIRING DIAGRAM—II

WBS NUMBER	FOR CITY OF HOUSTON USE ONLY
R-000267-00178-3	
DRAWING SCALE	
AS NOTED	
CITY OF HOUSTON PM	
TAHA LOTIA	
SHEET NO. 185 OF 268	

MC58-I-9

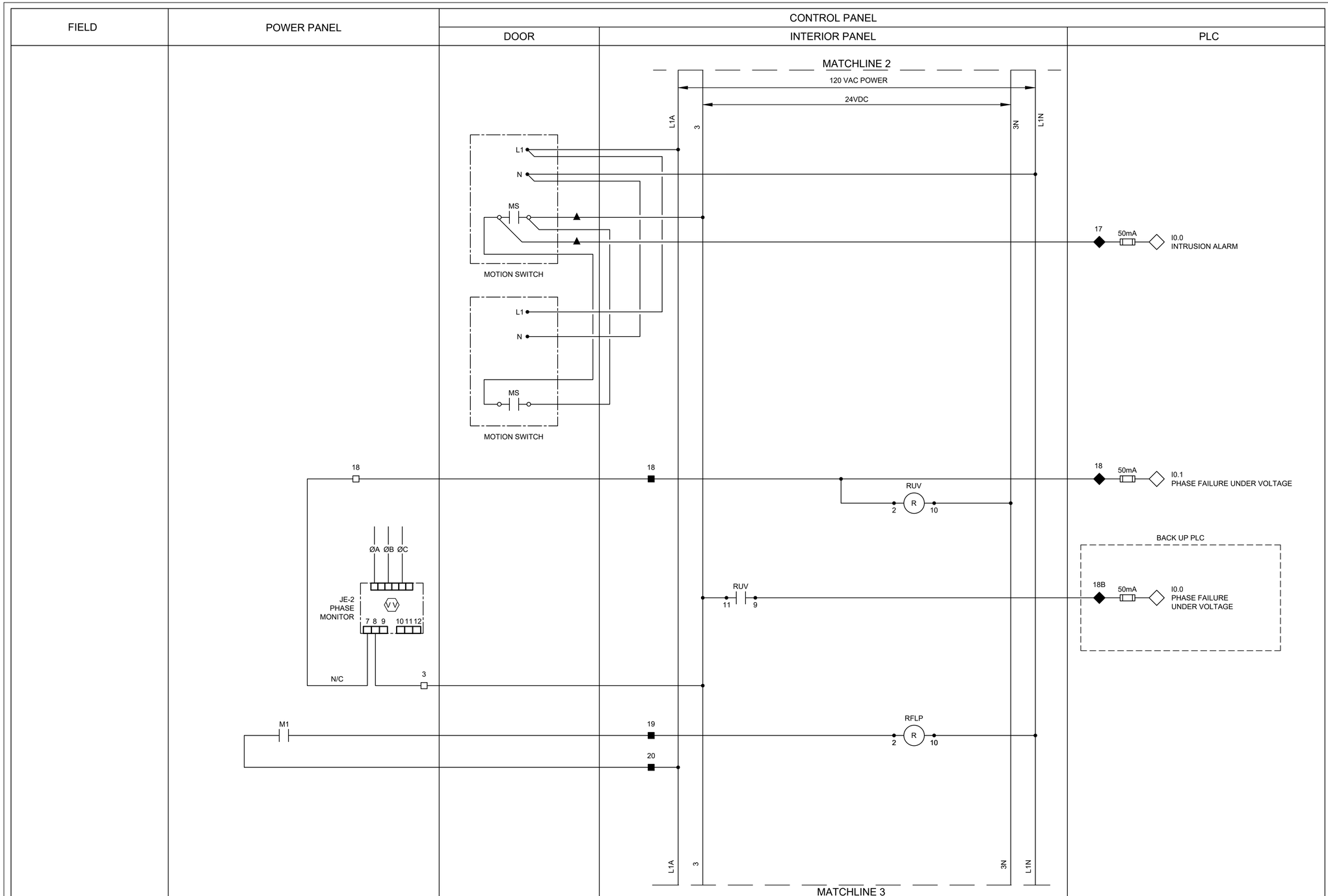

LEGEND

- △ DEVICE OR FIELD TERMINAL LOCATED AT MOTOR
- ✳ DEVICE OR FIELD TERMINAL LOCATED REMOTE
- □ DEVICE OR FIELD TERMINAL LOCATED AT MCC/POWER PANEL
- ■ FIELD TERMINAL LOCATED AT CONTROL PANEL
- ▲ REMOTE TERMINAL
- ● DEVICE TERMINAL NO.
- ◆ PLC INTERFACE TERMINAL

NOTES:

1. PROVIDE ONE LIMIT SWITCH PER EXTERIOR CONTROL PANEL AND POWER PANEL DOOR, WIRED IN PARALLEL.

GENERAL NOTES:

1. NO ELECTRICAL MATERIAL, APPARATUS, DEVICES, APPLIANCES, FIXTURES, OR EQUIPMENT SHALL BE SOLD OR INSTALLED IN THE CITY UNLESS THEY ARE IN CONFORMANCE WITH THE PROVISIONS OF SECTION 508 CITY OF HOUSTON ELECTRICAL CODE, THE LAWS OF THE STATE OF TEXAS AND ANY APPLICABLE RULES AND REGULATIONS ISSUED UNDER THE AUTHORITY OF THE STATE STATUES. THE MAKER'S NAME, TRADEMARK, OR OTHER IDENTIFICATION SYMBOL SHALL BE PLACED ON ALL ELECTRICAL MATERIALS, APPARATUS, DEVICES, APPLIANCES, FIXTURES, AND EQUIPMENT USED OR INSTALLED UNDER THE PROVISIONS OF THIS CODE. ALL ELECTRICAL MATERIALS AND EQUIPMENT SHALL BE LISTED AND LABELED FOR THE INTENDED USE AND SHALL BE INCLUDED IN A LIST PUBLISHED BY AN APPROVAL AGENCY.

NO.	DATE	REVISION	APP.
	MM/DD/YY	BRIEF DESCRIPTION	XXX
	MM/DD/YY	BRIEF DESCRIPTION	XXX
	MM/DD/YY	BRIEF DESCRIPTION	XXX

rps
A TETRA TECH COMPANY
Texas PE Firm Reg. #F-929
575 N. Dairy Ashford, Suite 700,
Houston, Texas 77079
T +1 281 589 7257
E usinfrastructure@rpsgroup.com

FOR INTERIM REVIEW ONLY NOT INTENDED FOR PERMIT, BIDDING OR CONSTRUCTION PURPOSES.
ENGINEER:
HOSS FOROUZAN
P.E. SERIAL NO.77748
03/30/2026

SURVEYED BY:
FB NO. F-4578

CITY OF HOUSTON
HOUSTON PUBLIC WORKS

RECONSTRUCTION & REHABILITATION
COH LIFT STATIONS

M.C. MUD #58 LIFT STATION CONTROL PANEL CONTROL WIRING DIAGRAM-III

WBS NUMBER	FOR CITY OF HOUSTON USE ONLY
R-000267-00178-3	
DRAWING SCALE	
AS NOTED	
CITY OF HOUSTON PM	
TAHA LOTIA	
SHEET NO. 186 OF 268	

MC58-I-10

FILE PATH: O:\H8109_Lift Station Rehabilitation And Reconstruction (Tetratech)\6 Drawings\Instrumentation And Control\Working\M.C. MUD #58 LIFT STATION CONTROL PANEL-III.dwg
PLOTTED: 3/27/2026 11:47 AM

FILE PATH: O:\H8109_Lift Station Rehabilitation And Reconstruction (Tetratech)\6 Drawings\Instrumentation And Control\Working\M.C. MUD #58 LIFT STATION CONTROL WIRING DIAGRAM-IV.dwg
PLOTTED: 3/27/2026 11:47 AM

NO.	DATE	REVISION	APP.
	MM/DD/YY	BRIEF DESCRIPTION	XXX
	MM/DD/YY	BRIEF DESCRIPTION	XXX
	MM/DD/YY	BRIEF DESCRIPTION	XXX

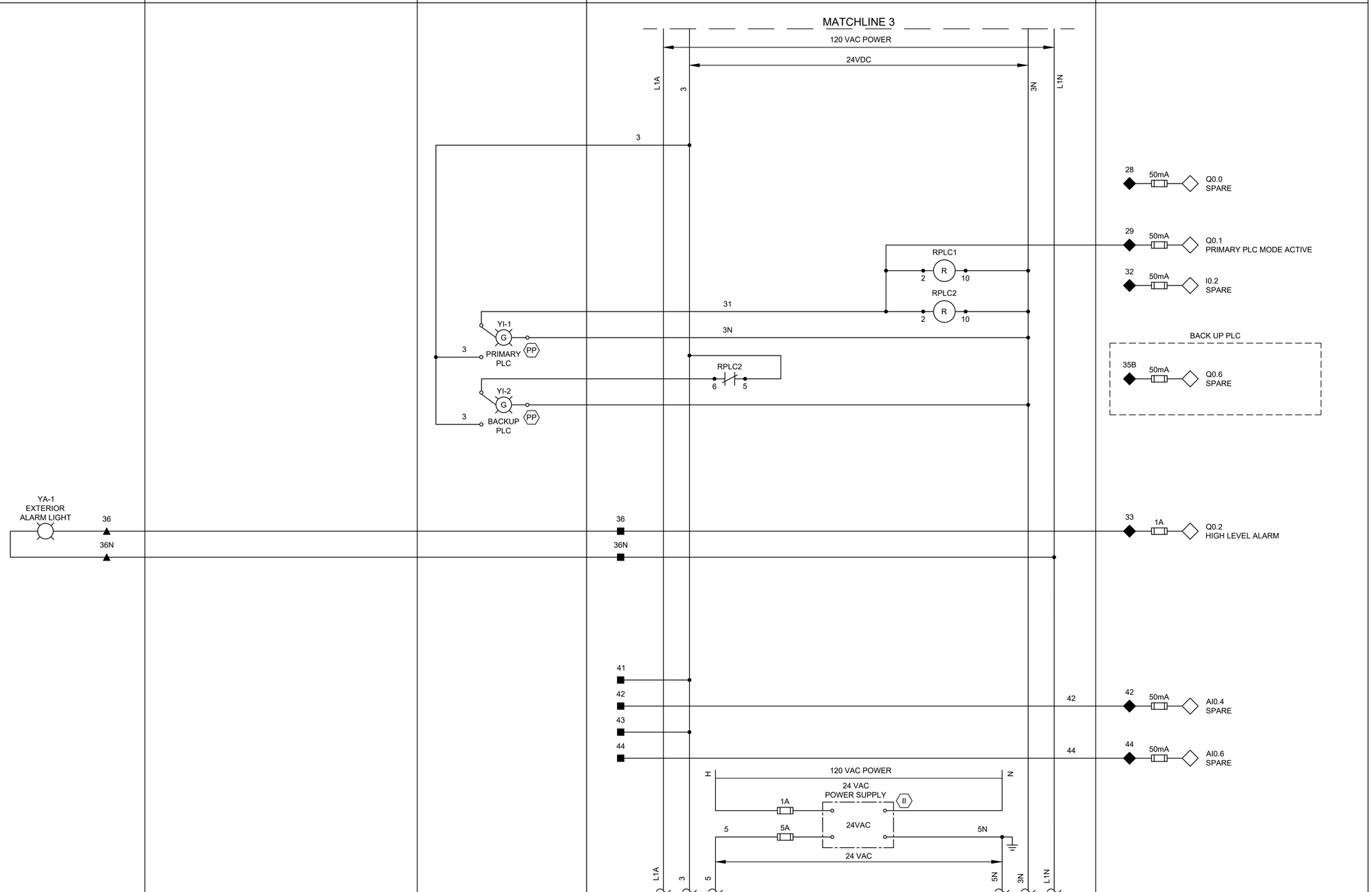

LEGEND

- △ DEVICE OR FIELD TERMINAL LOCATED AT MOTOR
- ✳ DEVICE OR FIELD TERMINAL LOCATED REMOTE
- □ DEVICE OR FIELD TERMINAL LOCATED AT MCC/POWER PANEL
- ■ FIELD TERMINAL LOCATED AT CONTROL PANEL
- ▲ REMOTE TERMINAL
- ● DEVICE TERMINAL NO.
- ◆ PLC INTERFACE TERMINAL

GENERAL NOTES:

1. NO ELECTRICAL MATERIAL, APPARATUS, DEVICES, APPLIANCES, FIXTURES, OR EQUIPMENT SHALL BE SOLD OR INSTALLED IN THE CITY UNLESS THEY ARE IN CONFORMANCE WITH THE PROVISIONS OF SECTION 508 CITY OF HOUSTON ELECTRICAL CODE, THE LAWS OF THE STATE OF TEXAS AND ANY APPLICABLE RULES AND REGULATIONS ISSUED UNDER THE AUTHORITY OF THE STATE STATUES. THE MAKER'S NAME, TRADEMARK, OR OTHER IDENTIFICATION SYMBOL SHALL BE PLACED ON ALL ELECTRICAL MATERIALS, APPARATUS, DEVICES, APPLIANCES, FIXTURES, AND EQUIPMENT USED OR INSTALLED UNDER THE PROVISIONS OF THIS CODE. ALL ELECTRICAL MATERIALS AND EQUIPMENT SHALL BE LISTED AND LABELED FOR THE INTENDED USE AND SHALL BE INCLUDED IN A LIST PUBLISHED BY AN APPROVAL AGENCY.

RPS A TETRA TECH COMPANY
Texas PE Firm Reg. #F-929
575 N. Dairy Ashford, Suite 700,
Houston, Texas 77079
T +1 281 589 7257
E usinfrastructure@rpsgroup.com

SURVEYED BY:
FB NO. F-4578

FOR INTERIM REVIEW ONLY NOT INTENDED FOR PERMIT, BIDDING OR CONSTRUCTION PURPOSES.
ENGINEER:
HOSS FOROUZAN
P.E. SERIAL NO.77748
03/30/2026

CITY OF HOUSTON
HOUSTON PUBLIC WORKS

RECONSTRUCTION & REHABILITATION
COH LIFT STATIONS

M.C. MUD #58 LIFT STATION CONTROL PANEL CONTROL WIRING DIAGRAM-IV

WBS NUMBER	FOR CITY OF HOUSTON USE ONLY
R-000267-00178-3	
DRAWING SCALE	
AS NOTED	
CITY OF HOUSTON PM	
TAHA LOTIA	
SHEET NO. 187 OF 268	

MC58-I-11

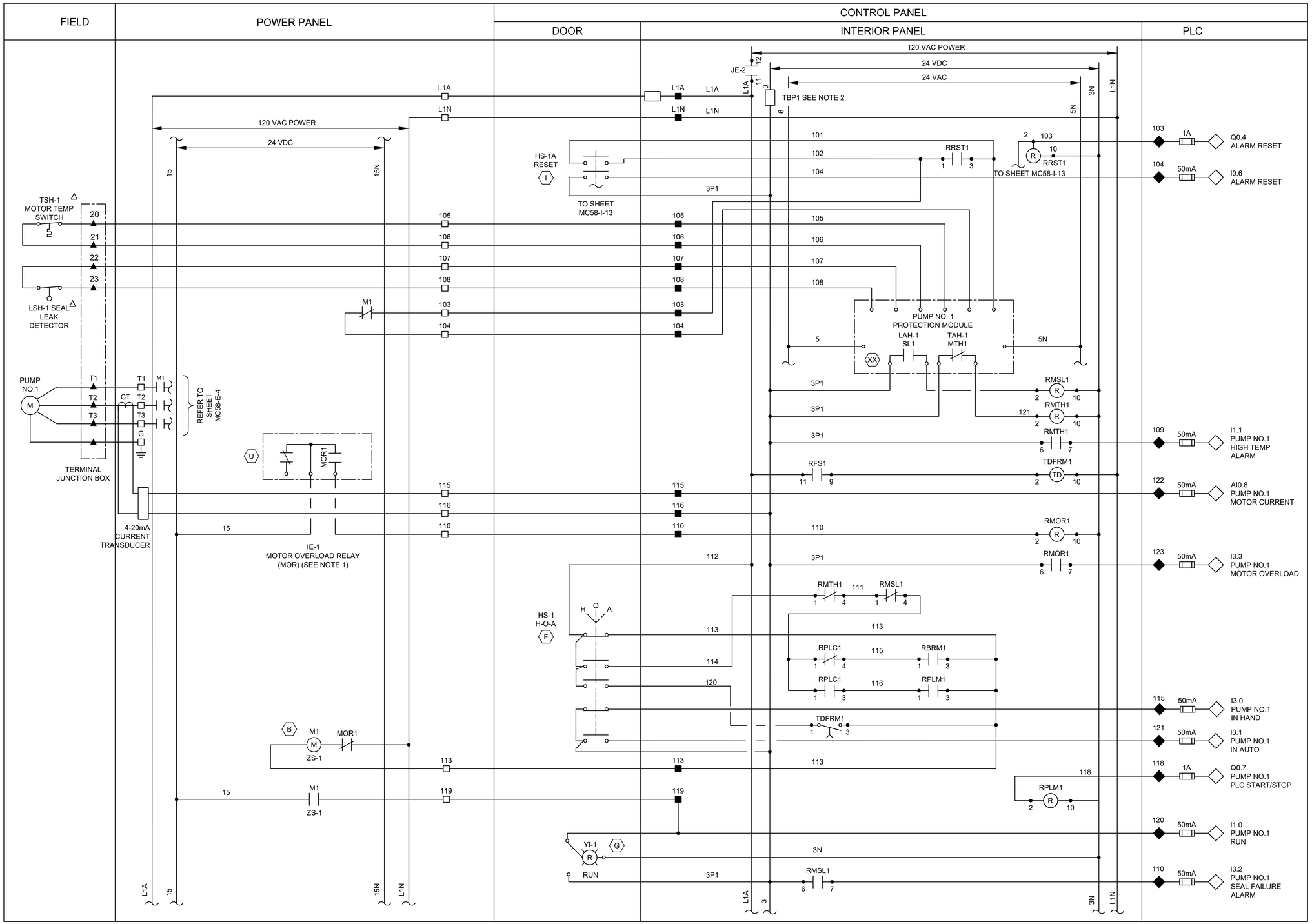

NOTES:

1. MOTOR OVERLOAD RELAY OUTPUT CONTACT SHOWN IS NORMALLY CLOSED WHEN RELAY IS DE-ENERGIZED, OPEN WHEN ENERGIZED, AND CLOSED WHEN IN ALARM. VERIFY OPERATION OF RELAY PROVIDED AND ADJUST CONNECTION OF RMOR AUXILIARY RELAYS.
2. FUSED TERMINAL ON TERMINAL BLOCK TB4 SEE CONTROL POWER AND COMMUNICATION WIRING DIAGRAM DRAWING NO. MC58-I-3.
3. ALL FLOAT CONTROL CIRCUIT WIRES COLOR SHALL BE YELLOW.

GENERAL NOTES:

1. NO ELECTRICAL MATERIAL, APPARATUS, DEVICES, APPLIANCES, FIXTURES, OR EQUIPMENT SHALL BE SOLD OR INSTALLED IN THE CITY UNLESS THEY ARE IN CONFORMANCE WITH THE PROVISIONS OF SECTION 508 CITY OF HOUSTON ELECTRICAL CODE, THE LAWS OF THE STATE OF TEXAS AND ANY APPLICABLE RULES AND REGULATIONS ISSUED UNDER THE AUTHORITY OF THE STATE STATUES. THE MAKER'S NAME, TRADEMARK, OR OTHER IDENTIFICATION SYMBOL SHALL BE PLACED ON ALL ELECTRICAL MATERIALS, APPARATUS, DEVICES, APPLIANCES, FIXTURES, AND EQUIPMENT USED OR INSTALLED UNDER THE PROVISIONS OF THIS CODE. ALL ELECTRICAL MATERIALS AND EQUIPMENT SHALL BE LISTED AND LABELED FOR THE INTENDED USE AND SHALL BE INCLUDED IN A LIST PUBLISHED BY AN APPROVAL AGENCY.

LEGEND

- △ DEVICE OR FIELD TERMINAL LOCATED AT MOTOR
- ✳ DEVICE OR FIELD TERMINAL LOCATED REMOTE
- □ DEVICE OR FIELD TERMINAL LOCATED AT MCC/POWER PANEL
- ■ FIELD TERMINAL LOCATED AT CONTROL PANEL
- ▲ REMOTE TERMINAL
- ● DEVICE TERMINAL NO.
- ◆ PLC INTERFACE TERMINAL

NO.	DATE	REVISION	APP.
	MM/DD/YY	BRIEF DESCRIPTION	XXX
	MM/DD/YY	BRIEF DESCRIPTION	XXX
	MM/DD/YY	BRIEF DESCRIPTION	XXX

rps
A TETRA TECH COMPANY
Texas PE Firm Reg. #F-929
575 N. Dairy Ashford, Suite 700, Houston, Texas 77079
T +1 281 589 7257
E usinfrastructure@rpsgroup.com

FOR INTERIM REVIEW ONLY NOT INTENDED FOR PERMIT, BIDDING OR CONSTRUCTION PURPOSES.
ENGINEER: HOSS FOROUZAN
P.E. SERIAL NO.77748
03/30/2026

SURVEYED BY:
FB NO. F-4578

CITY OF HOUSTON
HOUSTON PUBLIC WORKS

RECONSTRUCTION & REHABILITATION
COH LIFT STATIONS

M.C. MUD #58 LIFT STATION PUMP NO.1 CONTROL WIRING DIAGRAM

WBS NUMBER	FOR CITY OF HOUSTON USE ONLY
R-000267-00178-3	
DRAWING SCALE	
AS NOTED	
CITY OF HOUSTON PM	
TAHA LOTIA	
SHEET NO. 188 OF 268	

MC58-I-12

FILE PATH: O:\H8109_Lift Station Rehabilitation And Reconstruction (Tetratech)\6 Drawings\Instrumentation And Control\Working\M.C. MUD #58\H8109_MUD_I-18.dwg
PLOTTED: 3/27/2026 11:47 AM

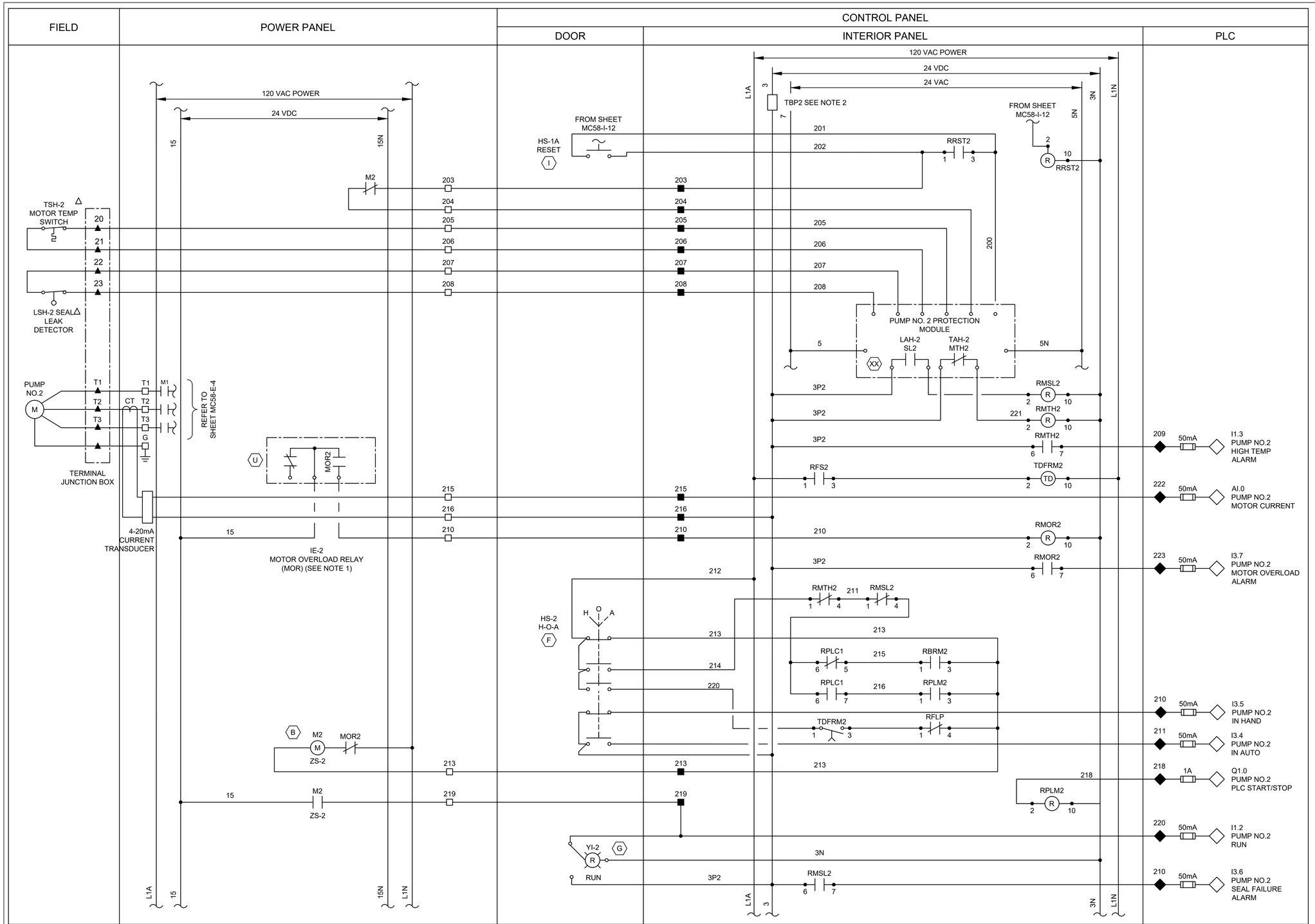

LEGEND

- △ DEVICE OR FIELD TERMINAL LOCATED AT MOTOR
- ✳ DEVICE OR FIELD TERMINAL LOCATED REMOTE
- □ DEVICE OR FIELD TERMINAL LOCATED AT MCC/POWER PANEL
- ■ FIELD TERMINAL LOCATED AT CONTROL PANEL
- ▲ REMOTE TERMINAL
- ● DEVICE TERMINAL NO.
- ◆ PLC INTERFACE TERMINAL

NOTES:

1. MOTOR OVERLOAD RELAY OUTPUT CONTACT SHOWN IS NORMALLY CLOSED WHEN RELAY IS DE-ENERGIZED, OPEN WHEN ENERGIZED, AND CLOSED WHEN IN ALARM. VERIFY OPERATION OF RELAY PROVIDED AND ADJUST CONNECTION OF RMOR AUXILIARY RELAYS.
2. FUSED TERMINAL ON TERMINAL BLOCK TB4 SEE CONTROL POWER AND COMMUNICATION WIRING DIAGRAM DRAWING NO. MC58-I-3.
3. ALL FLOAT CONTROL CIRCUIT WIRES COLOR SHALL BE YELLOW.

GENERAL NOTES:

1. NO ELECTRICAL MATERIAL, APPARATUS, DEVICES, APPLIANCES, FIXTURES, OR EQUIPMENT SHALL BE SOLD OR INSTALLED IN THE CITY UNLESS THEY ARE IN CONFORMANCE WITH THE PROVISIONS OF SECTION 508 CITY OF HOUSTON ELECTRICAL CODE, THE LAWS OF THE STATE OF TEXAS AND ANY APPLICABLE RULES AND REGULATIONS ISSUED UNDER THE AUTHORITY OF THE STATE STATUES. THE MAKER'S NAME, TRADEMARK, OR OTHER IDENTIFICATION SYMBOL SHALL BE PLACED ON ALL ELECTRICAL MATERIALS, APPARATUS, DEVICES, APPLIANCES, FIXTURES, AND EQUIPMENT USED OR INSTALLED UNDER THE PROVISIONS OF THIS CODE. ALL ELECTRICAL MATERIALS AND EQUIPMENT SHALL BE LISTED AND LABELED FOR THE INTENDED USE AND SHALL BE INCLUDED IN A LIST PUBLISHED BY AN APPROVAL AGENCY.

NO.	DATE	REVISION	APP.
	MM/DD/YY	BRIEF DESCRIPTION	XXX
	MM/DD/YY	BRIEF DESCRIPTION	XXX
	MM/DD/YY	BRIEF DESCRIPTION	XXX

rps A TETRA TECH COMPANY
Texas PE Firm Reg. #F-929
575 N. Dairy Ashford, Suite 700, Houston, Texas 77079
T +1 281 589 7257
E usinfrastructure@rpsgroup.com

FOR INTERIM REVIEW ONLY NOT INTENDED FOR PERMIT, BIDDING OR CONSTRUCTION PURPOSES.
ENGINEER: HOSS FOROUZAN
P.E. SERIAL NO.77748
03/30/2026

SURVEYED BY:
FB NO. F-4578

CITY OF HOUSTON
HOUSTON PUBLIC WORKS

RECONSTRUCTION & REHABILITATION
COH LIFT STATIONS

M.C. MUD #58 LIFT STATION PUMP NO.2 CONTROL WIRING DIAGRAM

WBS NUMBER	FOR CITY OF HOUSTON USE ONLY
R-000267-00178-3	
DRAWING SCALE	
AS NOTED	
CITY OF HOUSTON PM	
TAHA LOTIA	
SHEET NO. 189 OF 268	

MC58-I-13

FILE PATH: O:\H8109_Lift Station Rehabilitation And Reconstruction (Tetratech)\6 Drawings\Instrumentation And Control\Working\M.C. MUD #58\H8109_MUD_I-13.dwg
PLOTTED: 3/27/2026 11:47 AM

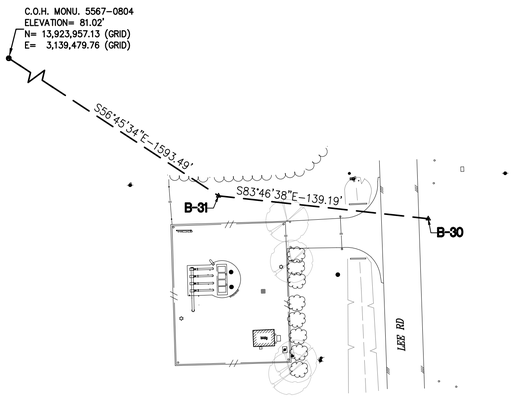

SURVEY BASELINE POINTS DATA (TEMPORARY BENCHMARK)						
POINT No.	NORTHING (SURFACE)	EASTING (SURFACE)	NORTHING (GRID)	EASTING (GRID)	ELEVATION	DESCRIPTION
B-30	13,924,878.67	3,141,359.02	13,923,068.68	3,140,950.70	80.84'	SET 1/2" I.R. W/CAP
B-31	13,924,893.76	3,141,220.65	13,923,083.76	3,140,812.34	84.32'	SET 1/2" I.R. W/CAP

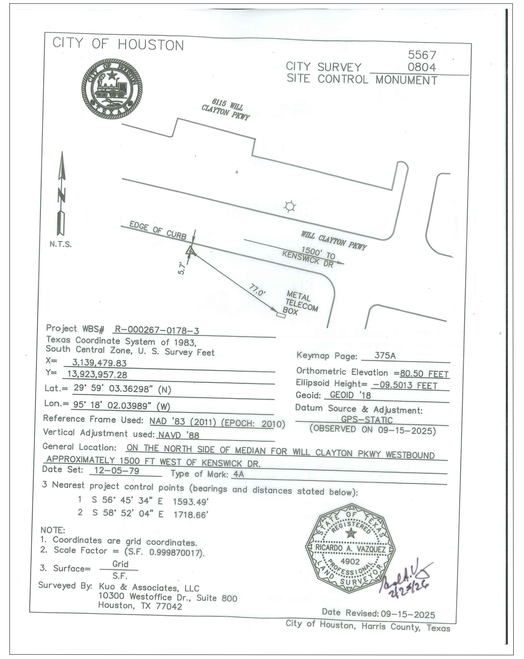



EXIST. TOPOGRAPHIC LEGEND

- ASPHALT SYMBOL
- B OR BB INLET
- BUSH
- C INLET
- CLEANOUT
- brick column
- DOWN GUY
- E INLET
- ELEC MANHOLE
- FIRE HYDRANT
- GAS METER
- GAS VALVE
- GATE
- GRATE INLET
- GRATE INLET
- MAIL BOX
- STORM MANHOLE
- SANITARY MANHOLE
- PLANTER
- POWER POLE
- POWER POLE W/LT.
- SIGN
- SIGNAL POLE
- SPRINKER VALVE
- SPRINKLER HEAD
- STREET LIGHT/FLOOD LIGHT
- STREET LIGHT/PARKING LIGHT
- TREE
- TREE STUMP
- TREE-CREPE MYRTLE
- TREE-PINE
- WATER METER
- WATER VALVE
- IRRIGATION CONTROL VALVE

ABBREVIATIONS

BC – BACK OF CURB
EA – EDGE OF ASPHALT
EC – EDGE OF CONCRETE
EG – EDGE OF GRAVEL
FH – FIRE HYDRANT
FC – FENCE CORNER
FP – FENCE POST
LT – LIGHT POLE
MB – MAIL BOX
MH – MANHOLE
PP – POWER POLE
PP/LIGHT – POWER POLE W/LIGHT
STLT – STREET LIGHT
TRLT – TRAFFIC LIGHT
WM – WATER METER

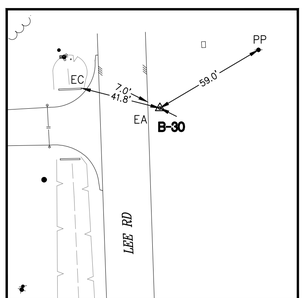

T.B.M. B-30

N.T.S.

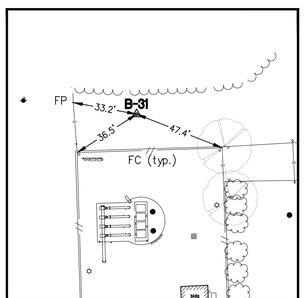

T.B.M. B-31

N.T.S.



NO.	DATE	REVISION	APP.

BENCHMARK:

CITY OF HOUSTON MONUMENT 5567-0804 IS AN BRASS DISK ON WILL CLAYTON PKWY 1,500 FEET WEST FROM THE INTERSECTION OF KENSWICK DR

ELEV. 81.32 FEET NAVD 1988, 2001 AJUSTMENT(PROJECT DATUM)
ELEV. 81.02 FEET NAVD 1988, (GEOID '18)*

* OBSERVED BY GPS SURVEYING AND PROCESSED IN REFERENCE TO THE CORS DATED OCTOBER 17, 2025.

VERTICAL DATUM ADJUSTMENT:

THE ELEVATION DIFFERENCE IN BETWEEN THE FLOODPLAIN REFERENCE MARK'S (RM 070265)PUBLISHED DATUM NAVD 1988, 2001 ADJUSTMENT AND DATUM NAVD 1988, (GEOID '18) IS 0.29'.

NAVD 1988, 2001 ADJ. ELEVATION
= NAVD 1988 (GEOID '18) ELEVATION + 0.29 FT

NOTE:

ALL BEARINGS AND DISTANCES ARE BASED ON TEXAS STATE PLANE COORDINATE SYSTEM, SOUTH CENTRAL ZONE NO. 4204, NAD83. ALL DISTANCES ARE IN SURFACE.

THE COORDINATES SHOWN HEREON ARE TEXAS SOUTH CENTRAL ZONE NO. 4204 STATE PLANE GRID COORDINATES (NAD83) AND MAY BE BROUGHT TO SURFACE BY DIVIDING BY THE COMBINED SCALE FACTOR 0.999870017.

LEGEND:

- **B-X** SURVEY CONTROL POINT NUMBER
- C-X DESIGN BASELINE POINT NUMBER
- SURVEY CONTROL POINT
- DESIGN BASELINE POINT
- CITY OF HOUSTON MONUMENT
- S. BL: SURVEY BASELINE

RPS
A TETRA TECH COMPANY
Texas PE Firm Reg. #F-929
575 N. Dairy Ashford, Suite 700,
Houston, Texas 77079
T +1 281 589 7257
E usinfrastructure@rpsgroup.com

KUO & ASSOCIATES
ENGINEERING + SURVEYING
10300 Westoffice Dr., Suite 800, Houston, Texas 77042
Tel: 713-975-8769, Fax: 713-975-0920, www.kuoassociates.com
TBPELS Firm Registration No. F-4578
TBPELS Firm Registration No. 1007560

THIS DOCUMENT IS RELEASED FOR THE PURPOSE OF INTERIM REVIEW UNDER THE AUTHORITY OF
RICARDO A. VAZQUEZ, R.P.L.S.
TEXAS REG. NO.: 4902
ON 02/26/2026
IT IS NOT TO BE USED FOR PERMIT, BIDDING OR CONSTRUCTION PURPOSES

CITY OF HOUSTON

HOUSTON PUBLIC WORKS

RECONSTRUCTION & REHABILITATION
COH LIFT STATIONS

WILL CLAYTON LS

SURVEY CONTROL MAP

WC-SC-1

WBS NUMBER	FOR CITY OF HOUSTON USE ONLY
R-000267-0178-3	
DRAWING SCALE	
AS SHOWN	
CITY OF HOUSTON PM	
TAHA LOTIA	
SHEET NO. 190 OF 268	

National Flood Hazard Layer FIRMette

FEMA

95°18'5"W 29°59'13"N

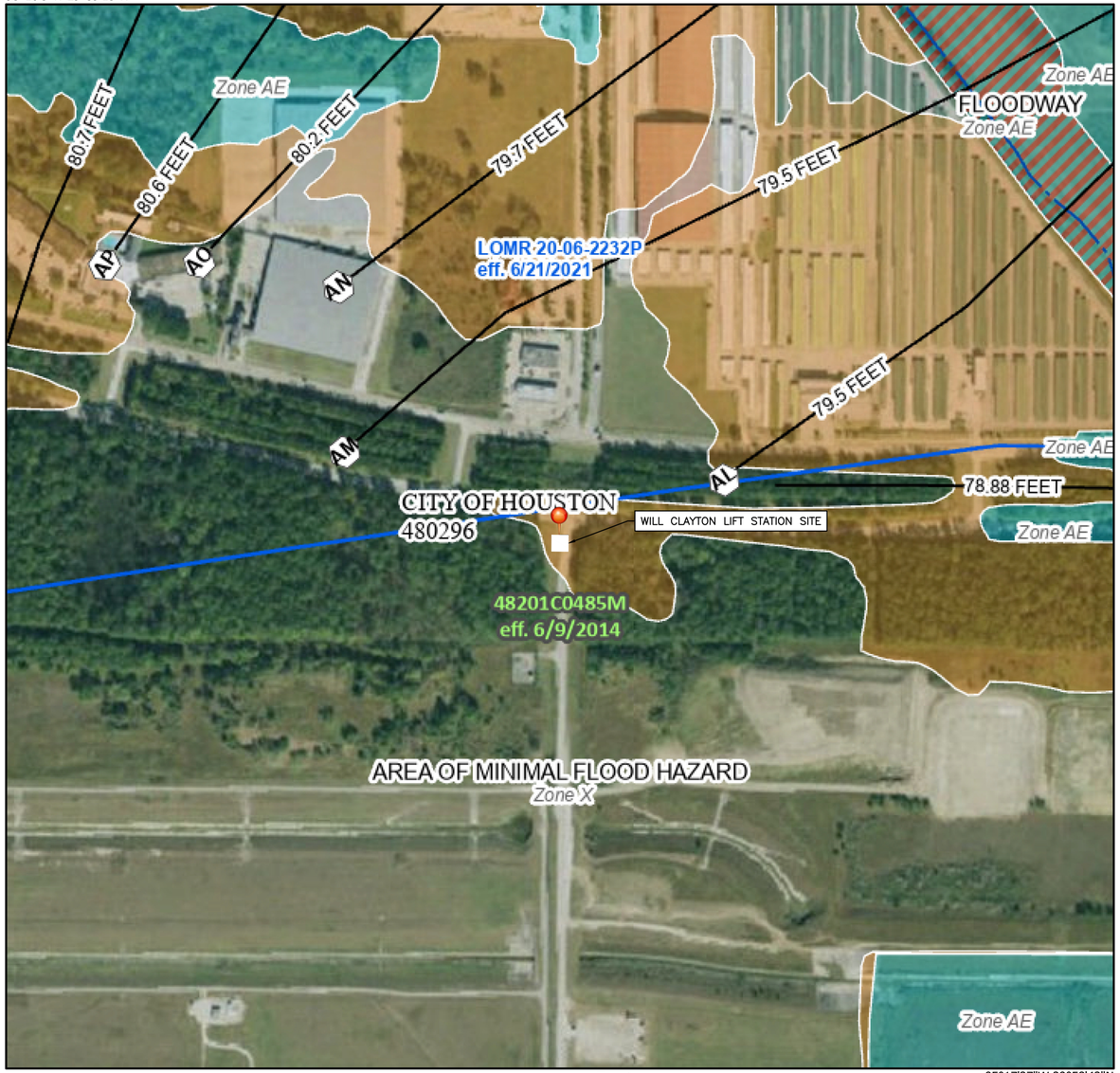

95°17'27"W 29°58'42"N

0 250 500 1,000 1,500 2,000 Feet

1:6,000

Basemap Imagery Source: USGS National Map 2023

Legend

SEE FIS REPORT FOR DETAILED LEGEND AND INDEX MAP FOR FIRM PANEL LAYOUT

SPECIAL FLOOD HAZARD AREAS
- Without Base Flood Elevation (BFE) *Zone A, V, A99*
- With BFE or Depth *Zone AE, AO, AH, VE, AR*
- Regulatory Floodway

OTHER AREAS OF FLOOD HAZARD
- 0.2% Annual Chance Flood Hazard, Areas of 1% annual chance flood with average depth less than one foot or with drainage areas of less than one square mile *Zone X*
- Future Conditions 1% Annual Chance Flood Hazard *Zone X*
- Area with Reduced Flood Risk due to Levee. See Notes. *Zone X*
- Area with Flood Risk due to Levee *Zone D*

OTHER AREAS
- NO SCREEN — Area of Minimal Flood Hazard *Zone X*
- Effective LOMRs
- Area of Undetermined Flood Hazard *Zone D*

GENERAL STRUCTURES
- Channel, Culvert, or Storm Sewer
- Levee, Dike, or Floodwall

OTHER FEATURES
- 20.2 / 17.5 — Cross Sections with 1% Annual Chance Water Surface Elevation
- Coastal Transect
- 513 — Base Flood Elevation Line (BFE)
- Limit of Study
- Jurisdiction Boundary
- Coastal Transect Baseline
- Profile Baseline
- Hydrographic Feature

MAP PANELS
- Digital Data Available
- No Digital Data Available
- Unmapped

N

The pin displayed on the map is an approximate point selected by the user and does not represent an authoritative property location.

This map complies with FEMA's standards for the use of digital flood maps if it is not void as described below. The basemap shown complies with FEMA's basemap accuracy standards

The flood hazard information is derived directly from the authoritative NFHL web services provided by FEMA. This map was exported on 7/31/2024 at 2:00 PM and does not reflect changes or amendments subsequent to this date and time. The NFHL and effective information may change or become superseded by new data over time.

This map image is void if the one or more of the following map elements do not appear: basemap imagery, flood zone labels, legend, scale bar, map creation date, community identifiers, FIRM panel number, and FIRM effective date. Map images for unmapped and unmodernized areas cannot be used for regulatory purposes.

RPS — A TETRA TECH COMPANY
Texas PE Firm Reg. #F-929
575 N. Dairy Ashford, Suite 700,
Houston, Texas 77079
T +1 281 589 7257
E usinfrastructure@rpsgroup.com

SURVEYED BY: KUO Inc.
FB NO. F-4578

This document is released for the purposes of interim review only under the authority of:

Neha Raval, P.E.
Texas P.E. No. 141506
03/30/2026

It is not to be used for bidding, construction, or permitting purposes.

CITY OF HOUSTON

HOUSTON PUBLIC WORKS

RECONSTRUCTION & REHABILITATION
COH LIFT STATIONS

FIRMETTE – WILL CLAYTON LS
WC–FC–1

WBS NUMBER	FOR CITY OF HOUSTON USE ONLY
R–000267–0178–3	
DRAWING SCALE	
AS NOTED	
CITY OF HOUSTON PM	
TAHA LOTIA	
SHEET NO. 191 OF 268	

PLOTTED: 3/30/2026 5:06 PM
PLOT STYLE: Coh_ctb_230809.ctb
FILE NAME: FIRMETTE – WILL CLAYTON LS.dwg



TSARP CONVERSION REFERENCE MONUMENT

CITY OF HOUSTON MONUMENT 5567-0804 IS AN BRASS DISK ON WILL CLAYTON PKWY 1,500 FEET WEST FROM THE INTERSECTION OF KENSWICK DR

PROJECT SITE MONUMENT

ELEV. 81.32 FEET NAVD 1988, 2001 ADJUSTMENT (PROJECT DATUM)
ELEV. 81.02 FEET NAVD 1988, (GEOID '18)*

*OBSERVED BY GPS SURVEYING AND PROCESSED IN REFERENCE TO THE CORS DATED OCTOBER 17, 2025

TBM
B-30: SET 1/2" I.R. W/CAP,
ELEV:80.84'
B-31: SET 1/2" I.R. W/CAP,
ELEV:84.32'

EXISTING UTILITY NOTE:

EXISTING UNDERGROUND UTILITY INFORMATION (TYPE, SIZE & OWNERSHIP) ARE APPROXIMATELY BASE ON THE AVAILABLE RECORD DRAWINGS AND FIELD VERIFICATION (WHERE FEASIBLE) WITHOUT PROBING AND EXCAVATION. NO WARRANTY IS MADE AS TO THE ACCURACY OR COMPLETENESS OF UTILITY LOCATION SHOWN ON THE DRAWING. CAUTION SHOULD BE EXERCISED WHEN EXCAVATING OR BORE AND JACKING IN THE VICINITY OF UNDERGROUND UTILITIES. OWNERS OF THE UTILITIES SHOULD BE NOTIFIED PRIOR TO SUCH ACTIVITIES. CALL UTILITY COORDINATING COMMITTEE AT 713-2223-4567. AT LEAST 48 HOURS PRIOR TO EXCAVATING IN THE STREET RIGHT-OF-WAY.

DEMOLITION NOTE:

WHEN MEASURED FROM THE PROPERTY LINE OF ANY NEARBY RESIDENTIAL PROPERTY. ANY SOUND PRODUCED BY THE ERECTION, EXCAVATION, CONSTRUCTION, OR DEMOLITION OF ANY STRUCTURE. INCLUDING THE USE OF TOOLS OR EQUIPMENT (CONDUCTED BETWEEN THE HOURS OF 7 A.M. AND 8 P.M. SHALL NOT EXCEED 85 DB(A).

RPS A TETRA TECH COMPANY
Texas PE Firm Reg. #F-929
575 N. Dairy Ashford, Suite 700,
Houston, Texas 77079
T +1 281 589 7257
E usinfrastructure@rpsgroup.com

SURVEYED BY: KUO Inc.
FB NO. F-4578

This document is released for the purposes of interim review only under the authority of:

Neha Raval, P.E.
Texas P.E. No. 141506
03/30/2026

It is not to be used for bidding, construction, or permitting purposes.

CITY OF HOUSTON
HOUSTON PUBLIC WORKS

RECONSTRUCTION & REHABILITATION
COH LIFT STATIONS

EXISTING & DEMOLITION PLAN –
WILL CLAYTON LS
WC-C-1

WBS NUMBER	FOR CITY OF HOUSTON USE ONLY
R-000267-0178-3	
DRAWING SCALE	
AS NOTED	
CITY OF HOUSTON PM	
TAHA LOTIA	
SHEET NO. 192 OF 268	

PLOTTED: 3/30/2026 5:06 PM
PLOT STYLE: Coh_ctb_230809.ctb
FILE NAME: EXISTING SITE PLAN - WILL CLAYTON LS.dwg

PLOTTED: 3/30/2026 5:50 PM
PLOT STYLE: 007_oce_coh_0620_src14.ctb
FILE NAME: PROPOSED SITE PLAN – WILL CLAYTON LS.dwg

N

0' 5' 10' 20'

SCALE: 1"=10'

control point #43980

control point #31

control point #43979

control point #30

control point #43981

control point #43985

5" VENT WITH GOOSENECK (SEE SHEET 203)

CLEAN & RE-COAT EXISTING WET WELL PER SPECIFICATION 09901

ABOVE GROUND PIPING (SEE PROCESS SHEET 205)

exist. 30" di san.

exist. 30" pvc san.

24" rcp

18" rcp

18 LF OF 30" SAN @ 0.09%

exist. 16" dip san. force main

FM BYPASS MH (SEE SHEET 13)

CONTRACTOR TO COORDINATE WITH CENTERPOINT ENERGY FOR GAS SERVICE CONNECTION

31.9'

WC-1

5.5'

14'

23.4'

NATURAL GAS GENERATOR (SEE ELECTRICAL SHEET 207)

GENERATOR PLATFORM (SEE ELECTRICAL SHEET 207)

exist. 6" waterline

bldg

SEE CONC. PAVEMENT SECTION DETAIL SHEET 28

8'

13.7'

2.6'

ELECTRICAL SERVICE RACK (SEE ELECTRICAL SHEET 207)

250KW GENERATOR (SEE ELECTRICAL SHEET 207)

REMOVED AND REPLACE BACKFLOW PREVENTER ASSEMBLY WITH HOT-BOX TYPE VANDAL PROOF ENCLOSURE

LEE RD

CONSTRUCTION NOTES

1. VERIFY ALL EXISTING DIMENSIONS, ELEVATIONS, INVERTS, AND UTILITIES IN THE FIELD BEFORE CONSTRUCTION.
2. UTILITY LOCATIONS SHOWN ARE APPROXIMATE AND BASED ON AVAILABLE RECORDS AND SURVEY INFORMATION.
3. MAINTAIN CONTINUOUS SANITARY SEWER SERVICE DURING CONSTRUCTION; PROVIDE BYPASS PUMPING AS REQUIRED.
4. ABANDON EXISTING SEWERS AND APPURTENANCES AS INDICATED AND IN ACCORDANCE WITH CITY OF HOUSTON REQUIREMENTS.
5. PROTECT EXISTING FACILITIES DESIGNATED TO REMAIN.
6. PROVIDE POSITIVE DRAINAGE AWAY FROM ALL LIFT STATION STRUCTURES AND EQUIPMENT PADS.
7. RESTORE DISTURBED AREAS TO EQUAL OR BETTER CONDITION.

TSARP CONVERSION REFERENCE MONUMENT

CITY OF HOUSTON MONUMENT 5567-0804 IS AN BRASS DISK ON WILL CLAYTON PKWY 1,500 FEET WEST FROM THE INTERSECTION OF KENSWICK DR

PROJECT SITE MONUMENT

ELEV. 81.32 FEET NAVD 1988, 2001 ADJUSTMENT (PROJECT DATUM)
ELEV. 81.02 FEET NAVD 1988, (GEOID '18)*

*OBSERVED BY GPS SURVEYING AND PROCESSED IN REFERENCE TO THE CORS DATED OCTOBER 17, 2025

TBM
B-30: SET 1/2" I.R. W/CAP,
ELEV:80.84'
B-31: SET 1/2" I.R. W/CAP,
ELEV:84.32'

rps
A TETRA TECH COMPANY
Texas PE Firm Reg. #F-929
575 N. Dairy Ashford, Suite 700,
Houston, Texas 77079
T +1 281 589 7257
E usinfrastructure@rpsgroup.com

SURVEYED BY: KUO Inc.
FB NO. F-4578

This document is released for the purposes of interim review only under the authority of:

Neha Raval, P.E.
Texas P.E. No. 141506
03/30/2026

It is not to be used for bidding, construction, or permitting purposes.

CITY OF HOUSTON
HOUSTON PUBLIC WORKS

RECONSTRUCTION & REHABILITATION
COH LIFT STATIONS

PROPOSED SITE PLAN
– WILL CLAYTON LS
WC-C-2

WBS NUMBER	FOR CITY OF HOUSTON USE ONLY
R-000267-0178-3	
DRAWING SCALE	
AS NOTED	
CITY OF HOUSTON PM	
TAHA LOTIA	
SHEET NO. 193 OF 268	

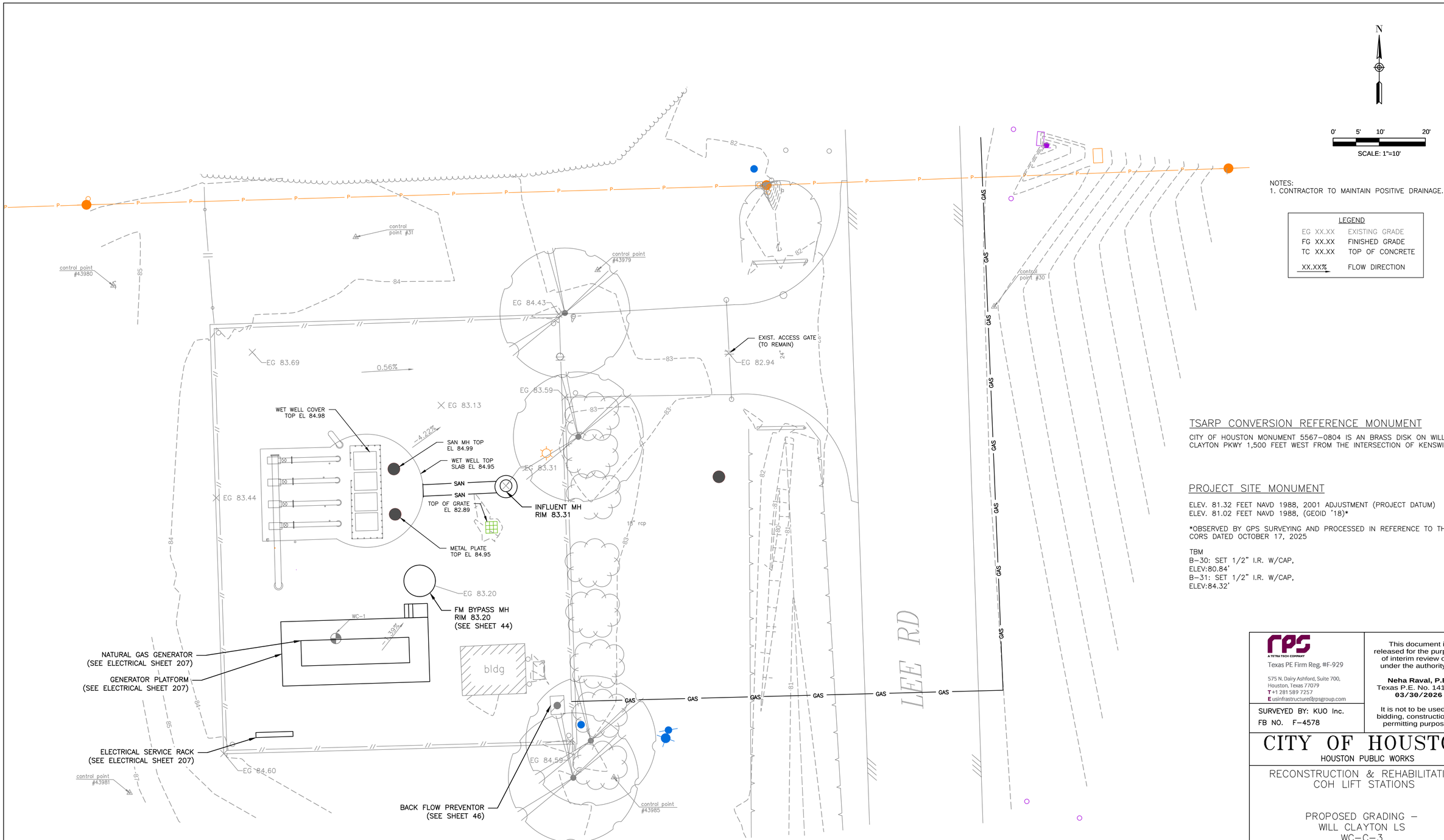

RPS
A TETRA TECH COMPANY
Texas PE Firm Reg. #F-929
575 N. Dairy Ashford, Suite 700, Houston, Texas 77079
T +1 281 589 7257
E usinfrastructure@rpsgroup.com

SURVEYED BY: KUO Inc.
FB NO. F-4578

This document is released for the purposes of interim review only under the authority of:

Neha Raval, P.E.
Texas P.E. No. 141506
03/30/2026

It is not to be used for bidding, construction, or permitting purposes.

CITY OF HOUSTON
HOUSTON PUBLIC WORKS

RECONSTRUCTION & REHABILITATION
COH LIFT STATIONS

PROPOSED GRADING -
WILL CLAYTON LS
WC-C-3

WBS NUMBER	FOR CITY OF HOUSTON USE ONLY
R-000267-0178-3	
DRAWING SCALE	
AS NOTED	
CITY OF HOUSTON PM	
TAHA LOTIA	
SHEET NO. 194 OF 268	

PLOTTED: 3/30/2026 5:50 PM
PLOT STYLE: Coh_ctb_230809.ctb
FILE NAME: PROP GRADING - STORM SEWER AND UTILITY PLAN - WILL CLAYTON LS.dwg

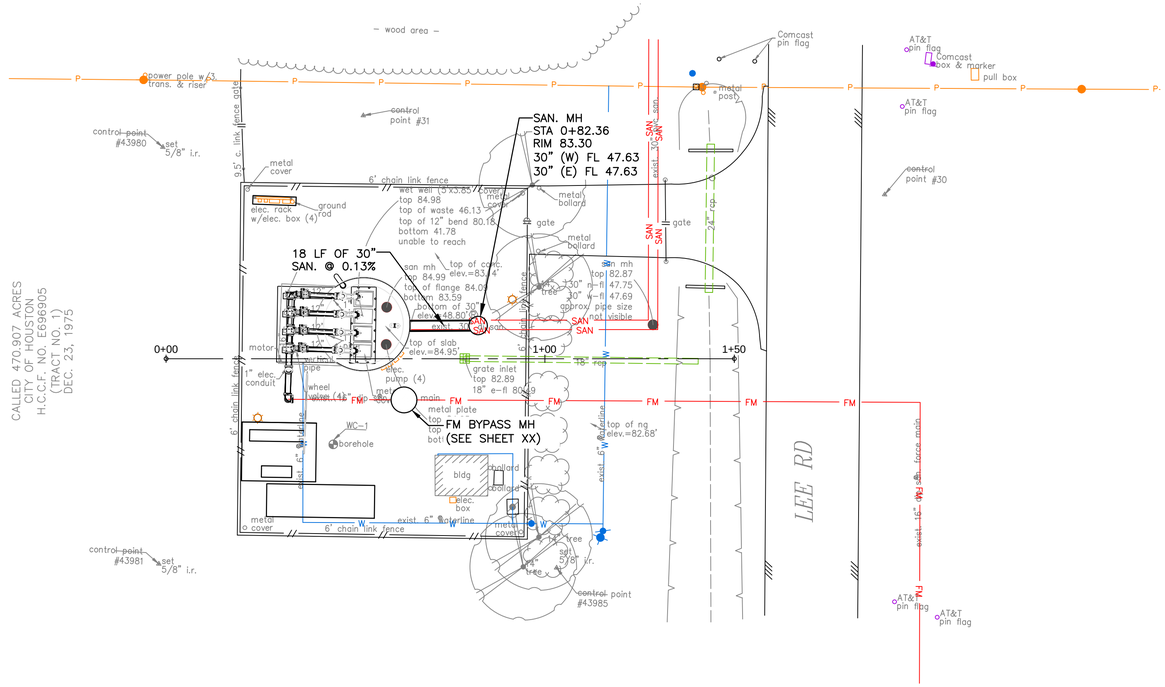

N

0' 10' 20' 40'

SCALE: 1"=20'

TSARP CONVERSION REFERENCE MONUMENT

CITY OF HOUSTON MONUMENT 5567–0804 IS AN BRASS DISK ON WILL CLAYTON PKWY 1,500 FEET WEST FROM THE INTERSECTION OF KENSWICK DR

PROJECT SITE MONUMENT

ELEV. 81.32 FEET NAVD 1988, 2001 ADJUSTMENT (PROJECT DATUM)
ELEV. 81.02 FEET NAVD 1988, (GEOID '18)*

*OBSERVED BY GPS SURVEYING AND PROCESSED IN REFERENCE TO THE CORS DATED OCTOBER 17, 2025

TBM
B–30: SET 1/2" I.R. W/CAP,
ELEV:80.84'
B–31: SET 1/2" I.R. W/CAP,
ELEV:84.32'

RPS
A TETRA TECH COMPANY
Texas PE Firm Reg. #F-929
575 N. Dairy Ashford, Suite 700,
Houston, Texas 77079
T +1 281 589 7257
E usinfrastructure@rpsgroup.com

SURVEYED BY: KUO Inc.
FB NO. F–4578

This document is released for the purposes of interim review only under the authority of:

Neha Raval, P.E.
Texas P.E. No. 141506
03/30/2026

It is not to be used for bidding, construction, or permitting purposes.

CITY OF HOUSTON
HOUSTON PUBLIC WORKS

RECONSTRUCTION & REHABILITATION
COH LIFT STATIONS

PLAN VIEW –
WILL CLAYTON LS
WC–C–4

WBS NUMBER	FOR CITY OF HOUSTON USE ONLY
R–000267–0178–3	
DRAWING SCALE	
AS NOTED	
CITY OF HOUSTON PM	
TAHA LOTIA	
SHEET NO. 195 OF 268	

PLOTTED: 3/30/2026 5:06 PM
PLOT STYLE: Coh_ctb_230809.ctb
FILE NAME: PLAN & PROFILE – WILL CLAYTON LS.dwg

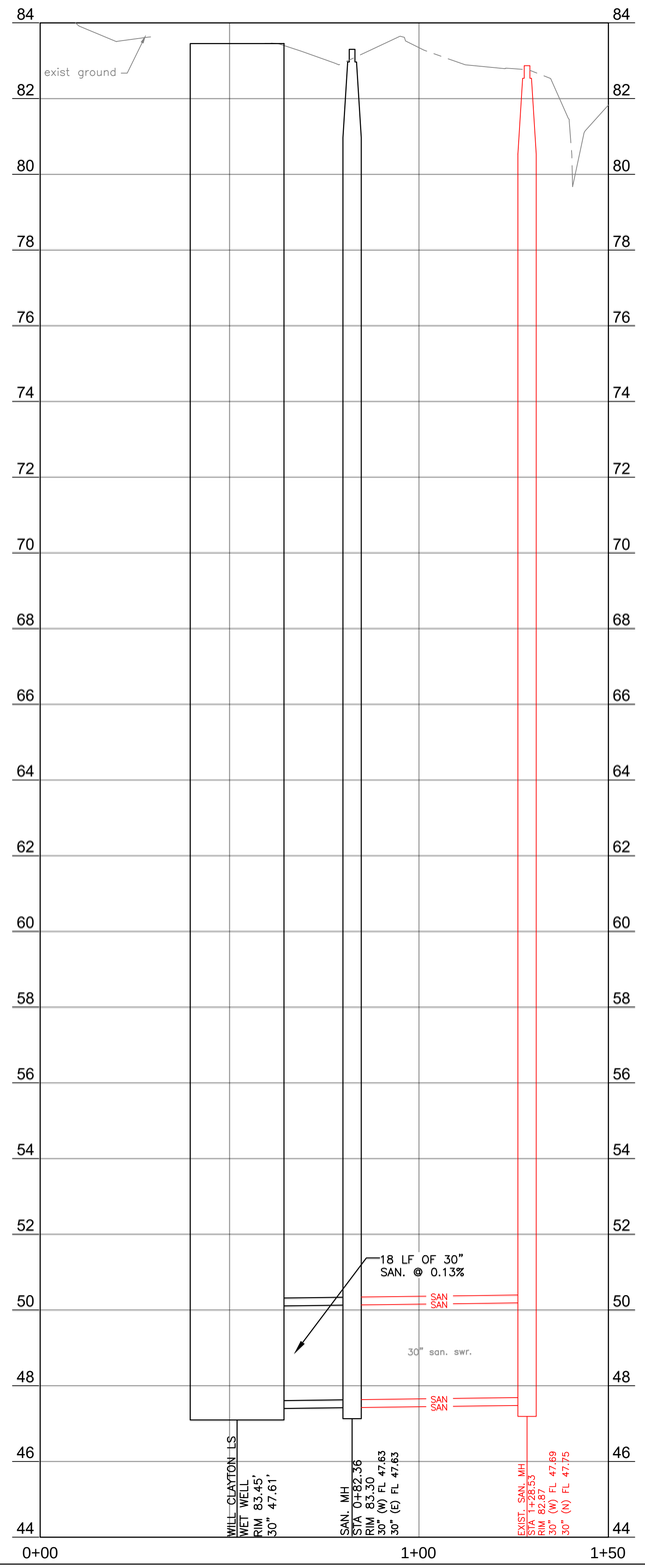

0' 1' 2' 4'

V SCALE: 1"=2'

A TETRA TECH COMPANY

Texas PE Firm Reg. #F-929

575 N. Dairy Ashford, Suite 700,
Houston, Texas 77079
T +1 281 589 7257
E usinfrastructure@rpsgroup.com

SURVEYED BY: KUO Inc.
FB NO. F-4578

This document is released for the purposes of interim review only under the authority of:

Neha Raval, P.E.
Texas P.E. No. 141506
03/30/2026

It is not to be used for bidding, construction, or permitting purposes.

CITY OF HOUSTON

HOUSTON PUBLIC WORKS

RECONSTRUCTION & REHABILITATION
COH LIFT STATIONS

PROFILE VIEW –
WILL CLAYTON LS
WC–C–5

WBS NUMBER	FOR CITY OF HOUSTON USE ONLY
R–000267–0178–3	
DRAWING SCALE	
AS NOTED	
CITY OF HOUSTON PM	
TAHA LOTIA	
SHEET NO. 196 OF 268	

PLOTTED: 3/30/2026 5:06 PM

PLOT STYLE: Coh_ctb_230809.ctb

FILE NAME: PLAN & PROFILE – WILL CLAYTON LS.dwg

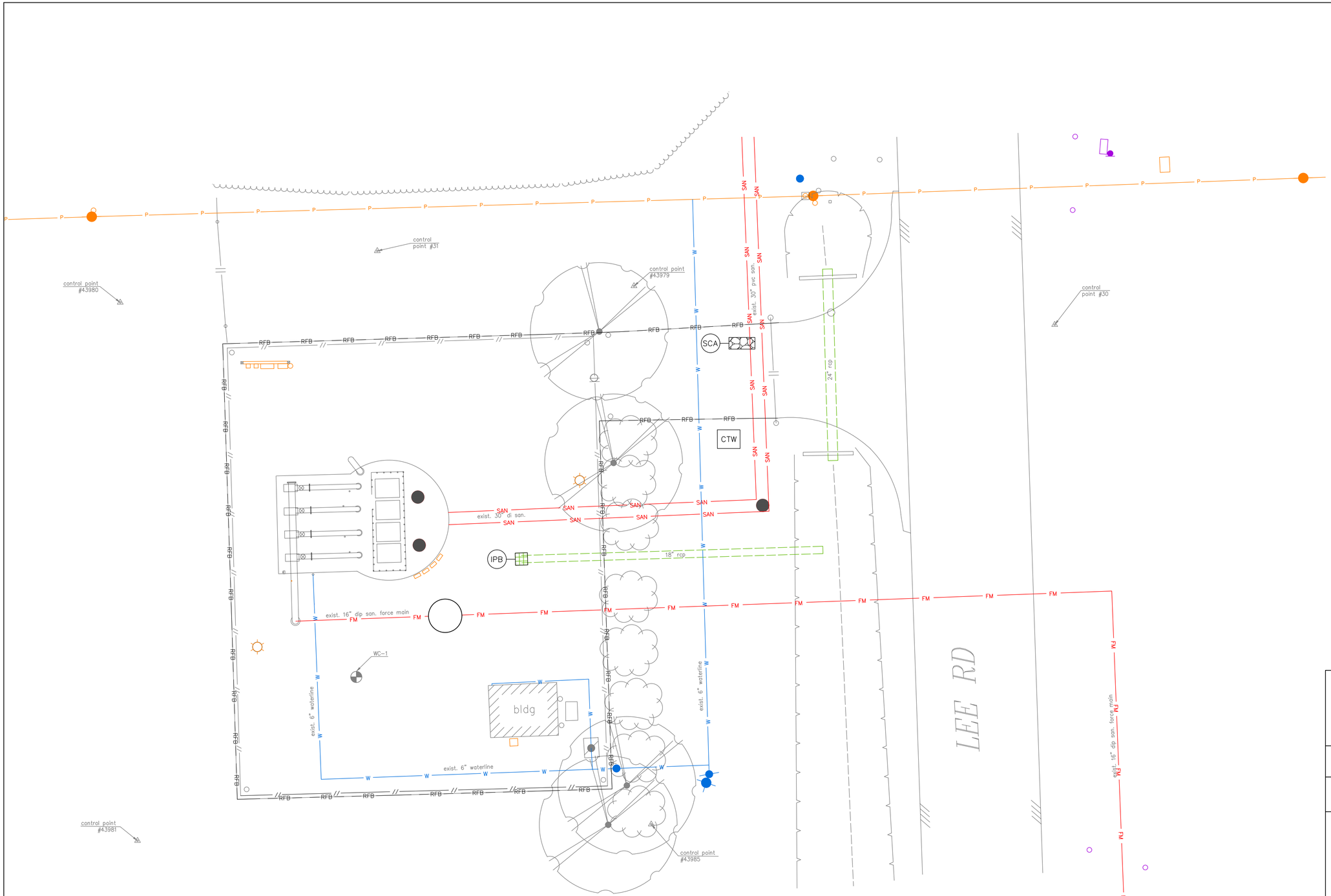

N

0' 5' 10' 20'

SCALE: 1"=10'

LEGEND

- REINFORCED FILTER FABRIC BARRIER
- INLET PROTECTION BARRIER
- STABILIZED CONSTRUCTION ACCESS
- CONCRETE TRUCK WASHOUT AREA

RPS
A TETRA TECH COMPANY
Texas PE Firm Reg. #F-929
575 N. Dairy Ashford, Suite 700,
Houston, Texas 77079
T +1 281 589 7257
E usinfrastructure@rpsgroup.com

SURVEYED BY: KUO Inc.
FB NO. F-4578

This document is released for the purposes of interim review only under the authority of:

Neha Raval, P.E.
Texas P.E. No. 141506
03/30/2026

It is not to be used for bidding, construction, or permitting purposes.

CITY OF HOUSTON

HOUSTON PUBLIC WORKS

RECONSTRUCTION & REHABILITATION
COH LIFT STATIONS

SWPPP – WILL CLAYTON LS
WC-C-6

WBS NUMBER	FOR CITY OF HOUSTON USE ONLY
R-000267-0178-3	
DRAWING SCALE	
AS NOTED	
CITY OF HOUSTON PM	
TAHA LOTIA	
SHEET NO. 197 OF 268	

PLOTTED: 3/30/2026 5:06 PM
PLOT STYLE: Coh_ctb_230809.ctb
FILE NAME: SWPPP – WILL CLAYTON LS.dwg

PLOTTED: 3/30/2026 5:07 PM

PLOT STYLE: Coh_ctb_230809.ctb

FILE NAME: TCP_WILL CLAYTON.dwg

N

0' 5' 10' 20'

SCALE: 1"=10'

control point #43980

control point #31

control point #43979

control point #30

COH STD. DTL
DWG NO: 01555-05
DETAIL SHEET 32

exist. 30" dip san. force main

exist. 30" dip san.

24" rcp

18" rcp

exist. 16" dip san. force main

WC-1

exist. 6" waterline

bldg

exist. 6" waterline

exist. 6" waterline

exist. 16" dip san. force main

LEE RD

control point #43981

control point #43985

RPS
A TETRA TECH COMPANY
Texas PE Firm Reg. #F-929
575 N. Dairy Ashford, Suite 700,
Houston, Texas 77079
T +1 281 589 7257
E usinfrastructure@rpsgroup.com

SURVEYED BY: KUO Inc.

FB NO. F-4578

This document is released for the purposes of interim review only under the authority of:

Neha Raval, P.E.
Texas P.E. No. 141506
03/30/2026

It is not to be used for bidding, construction, or permitting purposes.

CITY OF HOUSTON

HOUSTON PUBLIC WORKS

RECONSTRUCTION & REHABILITATION
COH LIFT STATIONS

TRAFFIC CONTROL PLAN –
WILL CLAYTON LS
WC-C-7

WBS NUMBER	FOR CITY OF HOUSTON USE ONLY
R-000267-0178-3	
DRAWING SCALE	
AS NOTED	
CITY OF HOUSTON PM	
TAHA LOTIA	
SHEET NO. 198 OF 268	

PLOTTED: 3/25/2026 11:29 AM
PLOT STYLE: CNKoehl.ctb
FILE PATH: C:\Users\Ned\Desktop\UPCOMING PROJECTS\TETRATECH COH LS REHAB\04 PROPOSED TPP - WILL CLAYTON LS.dwg

TREE PRESERVATION PLAN LEGEND

- 1 — TREE NUMBER/LOCATION
- (1) — TREE TO BE REMOVED
- —X— TREE PROTECTION FENCE
- ROOT PRUNING TRENCH

Trees at Will Clayton Lift Station					
245	18095 Lee Road	9" Redtip Photinia	Not protected		
246	18095 Lee Road	7" Redtip Photinia	Not protected		
247	18095 Lee Road	12" Chinese Pistache	Protected		Fence
248	18095 Lee Road	7" Redtip Photinia	Not protected		
249	18095 Lee Road	7" Redtip Photinia	Not protected		
250	18095 Lee Road	7" Redtip Photinia	Not protected		
251	18095 Lee Road	7" Redtip Photinia	Not protected		
252	18095 Lee Road	7" Redtip Photinia	Not protected		
253	18095 Lee Road	7" Redtip Photinia	Not protected		
254	18095 Lee Road	11" Chinese Pistache	Protected		Fence
255	18095 Lee Road	7" Redtip Photinia	Not protected		
256	18095 Lee Road	8" Redtip Photinia	Not protected		

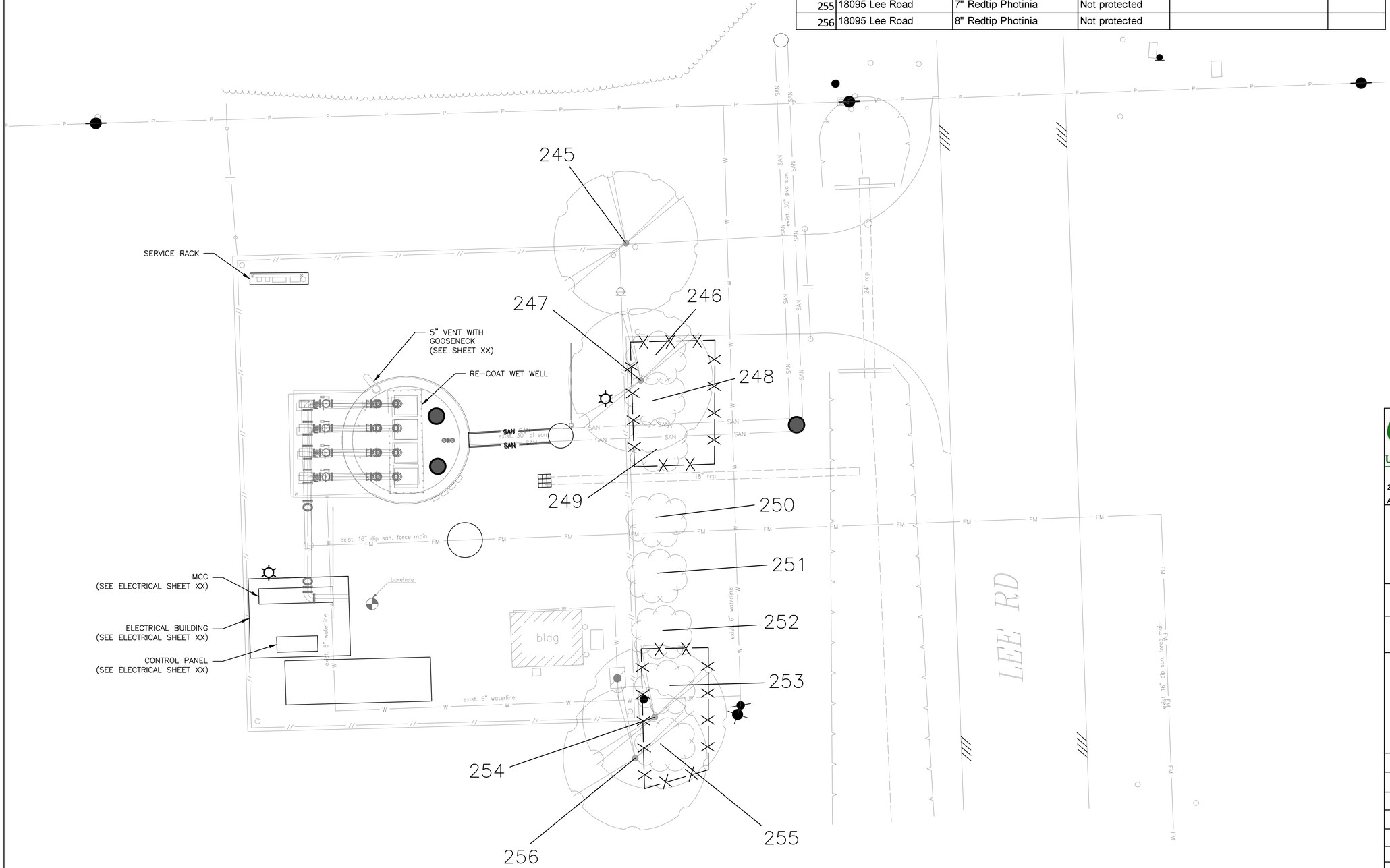

N

0' 5' 10' 20'

SCALE: 1"=10'

NOTE:

1. THIS TREE PROTECTION PLAN WAS DEVELOPED WITH INFORMATION PROVIDED BY DESIGN ENGINEER IN DRAWINGS DATED MARCH 2026. THE PLAN CONSIDERS ALL FITTINGS, VERTICAL OFFSETS AND AREAS OF NECESSARY EXCAVATION. CHANGES MADE TO DESIGN MAY COMPROMISE THE TREE PROTECTION PLAN. REFER SPECIFICATIONS 01562 AND 02915.
2. CN KOEHL URBAN FORESTRY, INC. HAS NOT BEEN CONTRACTED TO COMPLETE ANY TREE RISK ASSESSMENTS ON THIS PROJECT–THIS TPP INCLUDES PROTECTION MEASURES FOR SPECIES OF TREES PROTECTED BY APPLICABLE ORDINANCE ONLY. CN KOEHL URBAN FORESTRY, INC. DOES NOT GUARANTEE CONDITION OR STRUCTURAL INTEGRITY OF ANY TREE LOCATED ON OR ADJACENT TO THIS PROJECT.
3. IN AREAS WHERE INDIVIDUAL TREES HAVE NOT BEEN TIED IN BY SURVEY, APPROXIMATE LOCATION IS INDICATED ON TPP WITH A DOT AND TREE NUMBER. ACCURACY OF REPRESENTED LOCATION IS NOT GUARANTEED BY CN KOEHL URBAN FORESTRY, INC.

C.N. Koehl
Urban Forestry, Inc.
210 Stone Bush Ct. ◦ Katy, Texas 77493
281–391–0022 ckoehl@koehlurbanforestry.com

APPROVED:

RPS A TETRA TECH COMPANY
Texas PE Firm Reg. #F-929
575 N. Dairy Ashford, Suite 700,
Houston, Texas 77079
T +1 281 589 7257
E usinfrastructure@rpsgroup.com

SURVEYED BY: KUO Inc.
FB NO. F–4578

CITY OF HOUSTON
HOUSTON PUBLIC WORKS

RECONSTRUCTION & REHABILITATION
COH LIFT STATIONS

TREE PROTECTION PLAN
– WILL CLAYTON LS
WC–C–8

SHEET 4 OF 6

WBS NUMBER	FOR CITY OF HOUSTON USE ONLY
R–000267–0178–3	
DRAWING SCALE	
AS NOTED	
CITY OF HOUSTON PM	
TAHA LOTIA	
SHEET NO. 199 OF 268	

PLOTTED: 3/27/2026 9:39:35 AM
PLOT STYLE:
Autodesk Docs://200-317106-24001 COH LS Rehab Design/M-LIFT STATIONS-200-317106-24001_v25.rvt

KEYNOTE

(#) 1 PROVIDE PASSIVE GOOSENECK VENT FOR LIFT STATION WET WELL. COORDINATE WITH STRUCTURAL FOR PIPE PENETRATION THROUGH SIDEWALL OF WET WELL PER MECHANICAL DETAILS. ENSURE VENT LOCATION DOES NOT CLASH WITH ACCESS HATCH OPENING. VENT PIPE IS TO BE OF CORROSIVE RESISTANT CONSTRUCTION. PROVIDE REPLACEABLE STAINLESS STEEL INSECT SCREEN OVER VENT INLET/OUTLET.

NO	DATE	REVISION	APP.

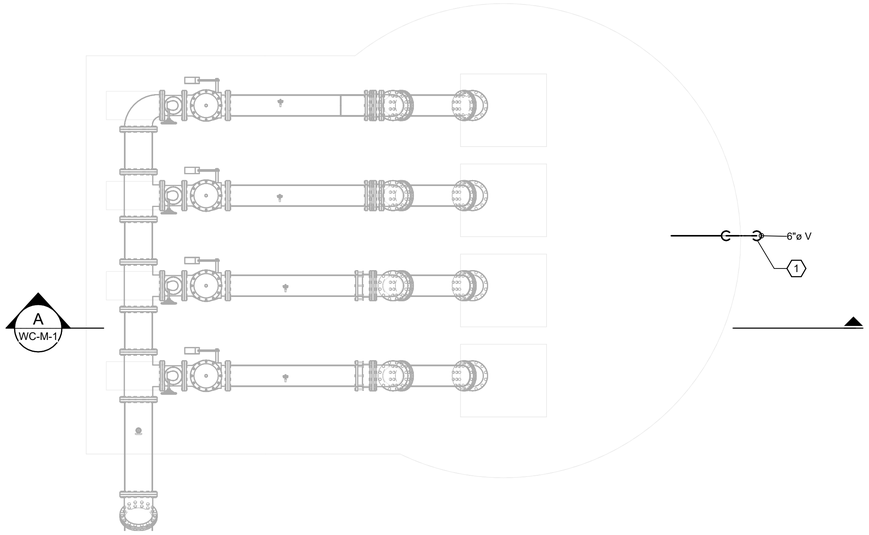

WILL CLAYTON LIFT STATION MECHANICAL PLAN
SCALE: 1/4" = 1'-0"

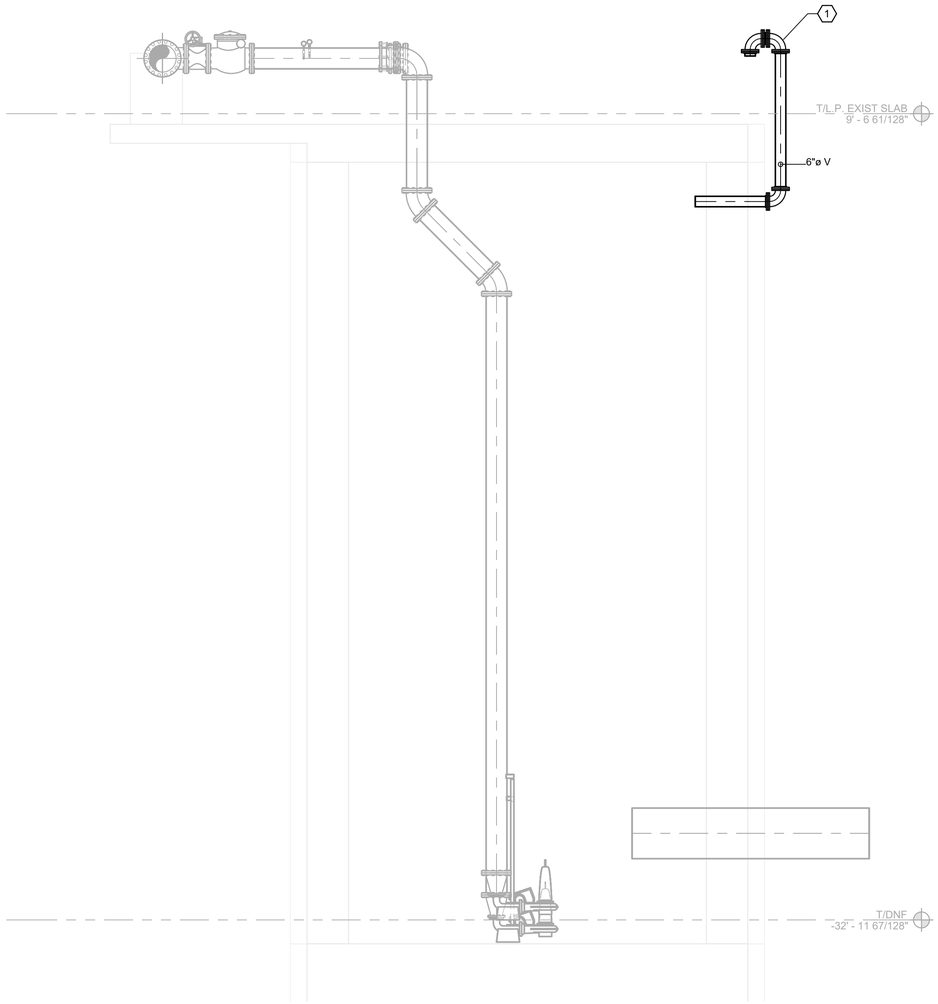

A WC-M-1 WILL CLAYTON LIFT STATION MECHANICAL SECTION
SCALE: 1/4" = 1'-0"

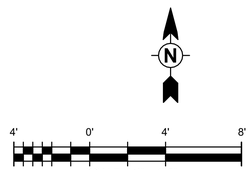

SCALE: 1/4" = 1'-0"

rps
A TETRA TECH COMPANY
Texas PE Firm Reg. #F-929
575 N. Dairy Ashford, Suite 700,
Houston, Texas 77079
T +1 281 589 7257
E usinfrastructure@rpsgroup.com

SURVEYED BY: KUO INC.
FB NO. F-4578

This document is released for the purposes of interim review only under the authority of:

Luke Ramirez, P.E.
Texas P.E. No. 128371
2/16/26

It is not to be used for bidding, construction, or permitting purposes.

CITY OF HOUSTON

HOUSTON PUBLIC WORKS

RECONSTRUCTION & REHABILITATION
COH LIFT STATIONS

WILL CLAYTON LS MECHANICAL PLAN AND SECTION

WC-M-1

WBS NUMBER	FOR CITY OF HOUSTON USE ONLY
R-000267-0178-3	
DRAWING SCALE	
AS NOTED	
CITY OF HOUSTON PM	
TAHA LOTIA	
SHEET NO. 200 OF 268	

PLOTTED: 3/27/2026 9:39:51 AM
PLOT STYLE:
Autodesk Docs://200-317106-24001 COH LS Rehab Design/M-LIFT STATIONS-200-317106-24001_v25.rvt

KEYNOTE

1. DEMOLISH AND REMOVE ABOVE GRADE BACKFLOW PREVENTER ASSEMBLY AND ALL ASSOCIATED ACCESSORIES AND SUPPORTS. DEMOLISH AND REMOVE DOMESTIC COLD WATER PIPING AND INSULATION DOWN TO BELOW GRADE. EXISTING BELOW GRADE PIPING TO REMAIN. REFER TO CIVIL DRAWINGS FOR DOMESTIC COLD WATER YARD PIPING CONTINUATION.
2. EXISTING FREEZE PROOF HOSE BIBB IS TO REMAIN.
3. REFER TO CIVIL PLANS FOR YARD PIPING CONTINUATION.
4. PROVIDE NEW ABOVE GRADE BACKFLOW PREVENTER BFP-4 IN SAME LOCATION AS PREVIOUS. PROVIDE TRANSITIONS AND OFFSETS AS NECESSARY TO CONNECT TO EXISTING DOMESTIC COLD WATER PIPING BELOW GRADE. REFER TO TYPICAL PLUMBING DETAIL AND PLUMBING SCHEDULES.
5. PROVIDE NATURAL GAS SERVICE PIPING TO LIFT STATION SITE. COORDINATE WITH LOCAL UTILITY FOR NATURAL GAS SERVICE CONNECTION TO MAIN. CONTRACTOR TO COORDINATE WITH LOCAL UTILITY TO PROVIDE NEW NATURAL GAS METER AND PRESSURE REDUCING VALVE FOR SERVICE.
6. REFER TO ELECTRICAL DRAWINGS AND GENERATOR MANUFACTURER SPECIFICATIONS FOR FINAL NATURAL GAS PIPING CONNECTION LOCATION. PROVIDE SHUT OFF VALVE FOR ISOLATION AND FLEXIBLE CONNECTION AT GENERATOR.

NO	DATE	REVISION	APP.

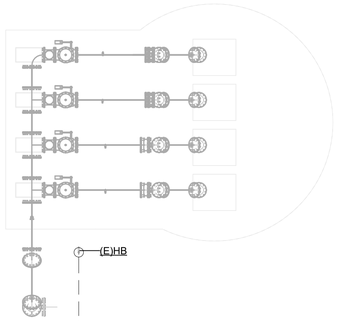

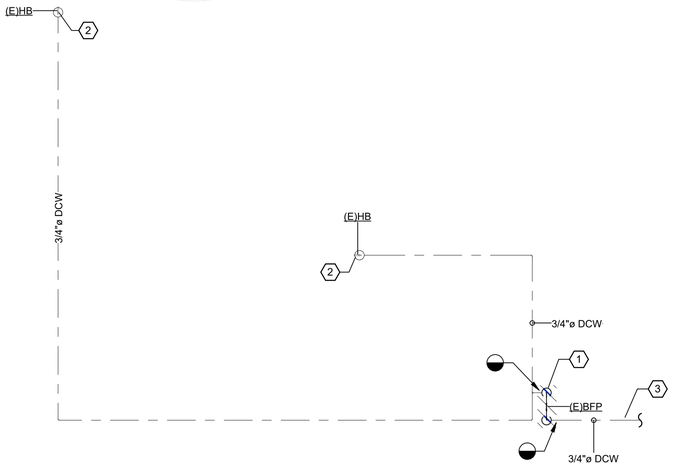

WILL CLAYTON LIFT STATION PLUMBING DEMOLITION PLAN

SCALE: 1/8" = 1'-0"

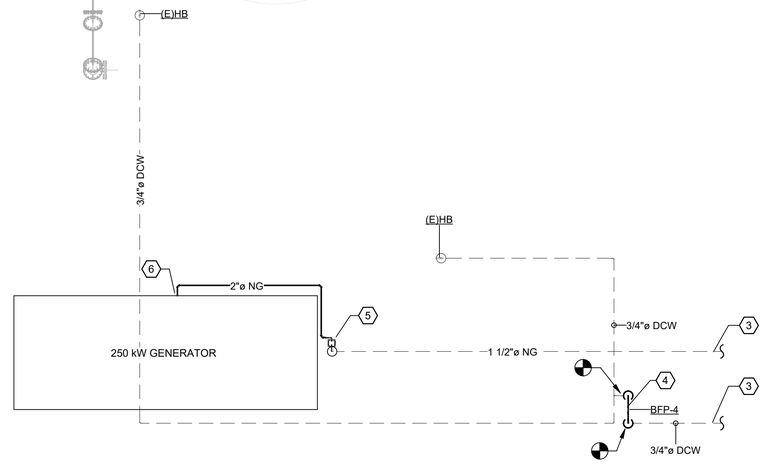

WILL CLAYTON LIFT STATION PLUMBING NEW WORK PLAN

SCALE: 1/8" = 1'-0"



A WC-P-1 WILL CLAYTON LIFT STATION PLUMBING DEMOLITION PHOTO

SCALE: N.T.S.

N

8' 0' 8' 16'

SCALE: 1/8" = 1'-0"

A TETRA TECH COMPANY
Texas PE Firm Reg. #F-929
575 N. Dairy Ashford, Suite 700,
Houston, Texas 77079
T +1 281 589 7257
E usinfrastructure@rpsgroup.com

SURVEYED BY: KUO INC.
FB NO. F-4578

This document is released for the purposes of interim review only under the authority of:

Luke Ramirez, P.E.
Texas P.E. No. 128371
2/16/26

It is not to be used for bidding, construction, or permitting purposes.

CITY OF HOUSTON

HOUSTON PUBLIC WORKS

RECONSTRUCTION & REHABILITATION
COH LIFT STATIONS

WILL CLAYTON LS PLUMBING PLANS

WC-P-1

WBS NUMBER	FOR CITY OF HOUSTON USE ONLY
R-000267-0178-3	
DRAWING SCALE	
AS NOTED	
CITY OF HOUSTON PM	
TAHA LOTIA	
SHEET NO. 201 OF 268	

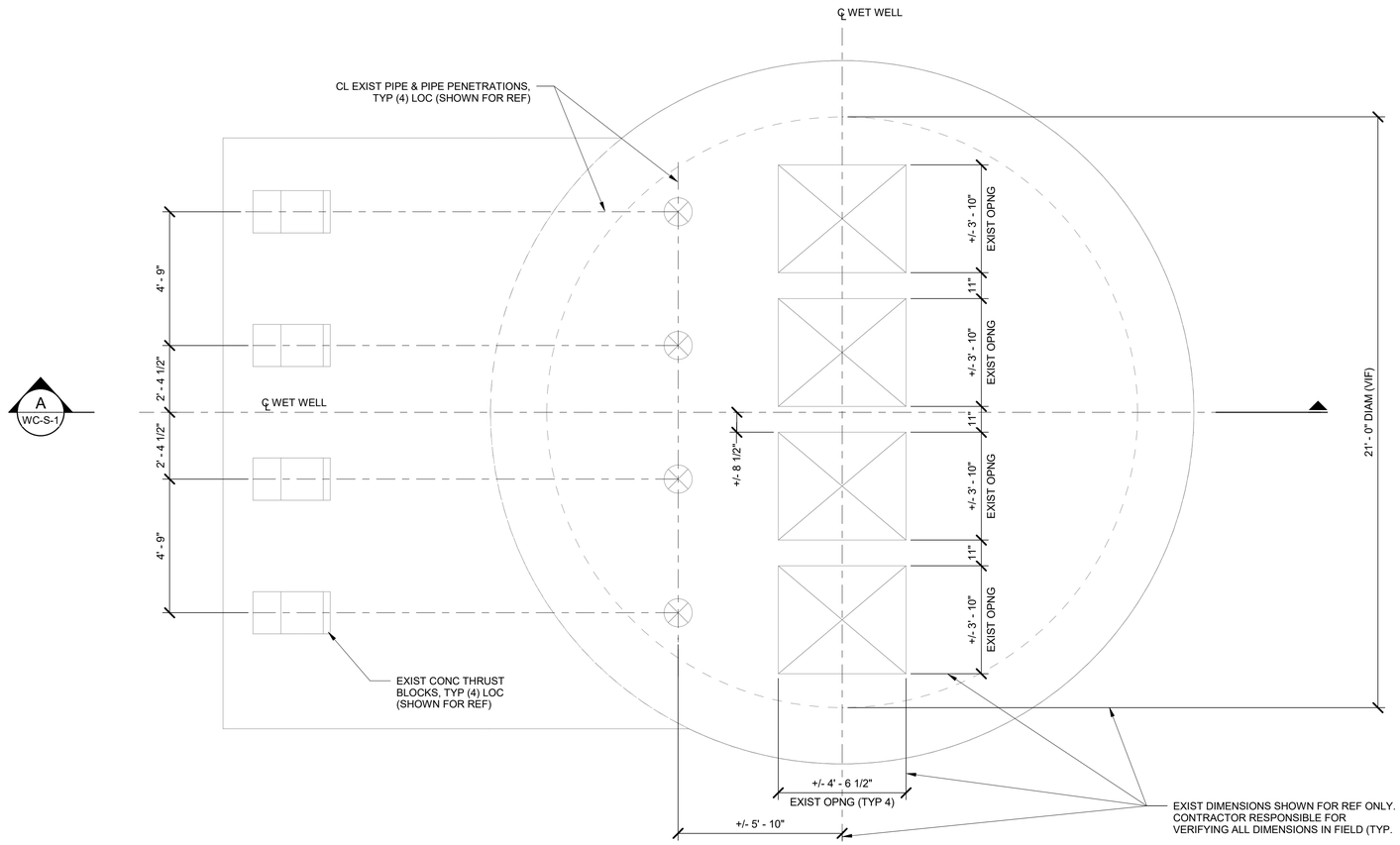

A
WC-S-1

WILL CLAYTON EXIST TOP SLAB PLAN

SCALE: 3/8" = 1'-0"

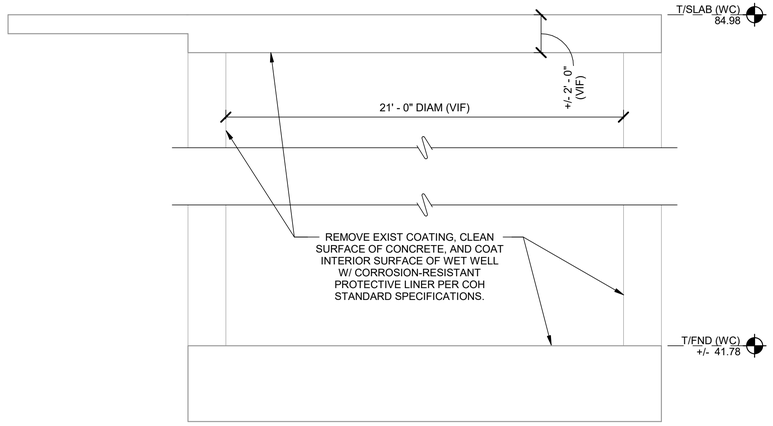

A
WC-S-1

SECTION

SCALE: 1/4" = 1'-0"

2' 0' 2' 4' 6'

SCALE: 3/8" = 1'-0"

NO.	DATE	REVISION	APP.

RPS
A TETRA TECH COMPANY
Texas PE Firm Reg. #F-929
575 N. Dairy Ashford, Suite 700,
Houston, Texas 77079
T +1 281 589 7257
E usinfrastructure@rpsgroup.com

SURVEYED BY: KUO Inc.
FB NO. F-4578

This document is released for the purposes of interim review only under the authority of:

Phillip A. Fleming, P.E.
Texas P.E. No. 131982
2/10/26

It is not to be used for bidding, construction, or permitting purposes.

CITY OF HOUSTON

HOUSTON PUBLIC WORKS

RECONSTRUCTION & REHABILITATION
COH LIFT STATIONS

WILL CLAYTON LS STRUCTURAL PLAN AND SECTION

WC-S-1

WBS NUMBER	FOR CITY OF HOUSTON USE ONLY
R-000267-0178-3	
DRAWING SCALE	
AS NOTED	
CITY OF HOUSTON PM	
TAHA LOTIA	
SHEET NO. 202 OF 268	

PLOTTED 3/30/2026 10:01:23 AM

PLOT STYLE:

Autodesk Docs://200-317106-24001 COH LS Rehab Design/S-LIFT STATIONS-200-317106-24001_v25.rvt

PLOT STYLE:
PLOTTED: 3/27/2026 1:04:49 PM
Autodesk Docs://200-317106-24001 COH LS Rehab Design/D-LIFT STATIONS-200-317106-24001_v25.rvt

NO	DATE	REVISION	APP.

PIPE AND FITTING SCHEDULE	
ITEM	DESCRIPTION
A	12" 90° ELBOW, FLG, DIP
B	12" SPOOL, FLG, DIP
C	12" FLG COUPLING ADAPTOR
D	2" AIR & VACUUM VALVE
E	12" CHECK VALVE, FLG
F	12" ISOLATION VALVE, FLG
G	16"X12" TEE, FLG, DIP
H	16" BLIND FLG, DIP
I	2" AIR RELEASE VALVE
J	6" WALL PIPE W/WATERSTOP COLLAR, DIP, PVC C-900
K	16" SPOOL, FLG, DIP
L	16" 45° ELBOW, FLG, DIP

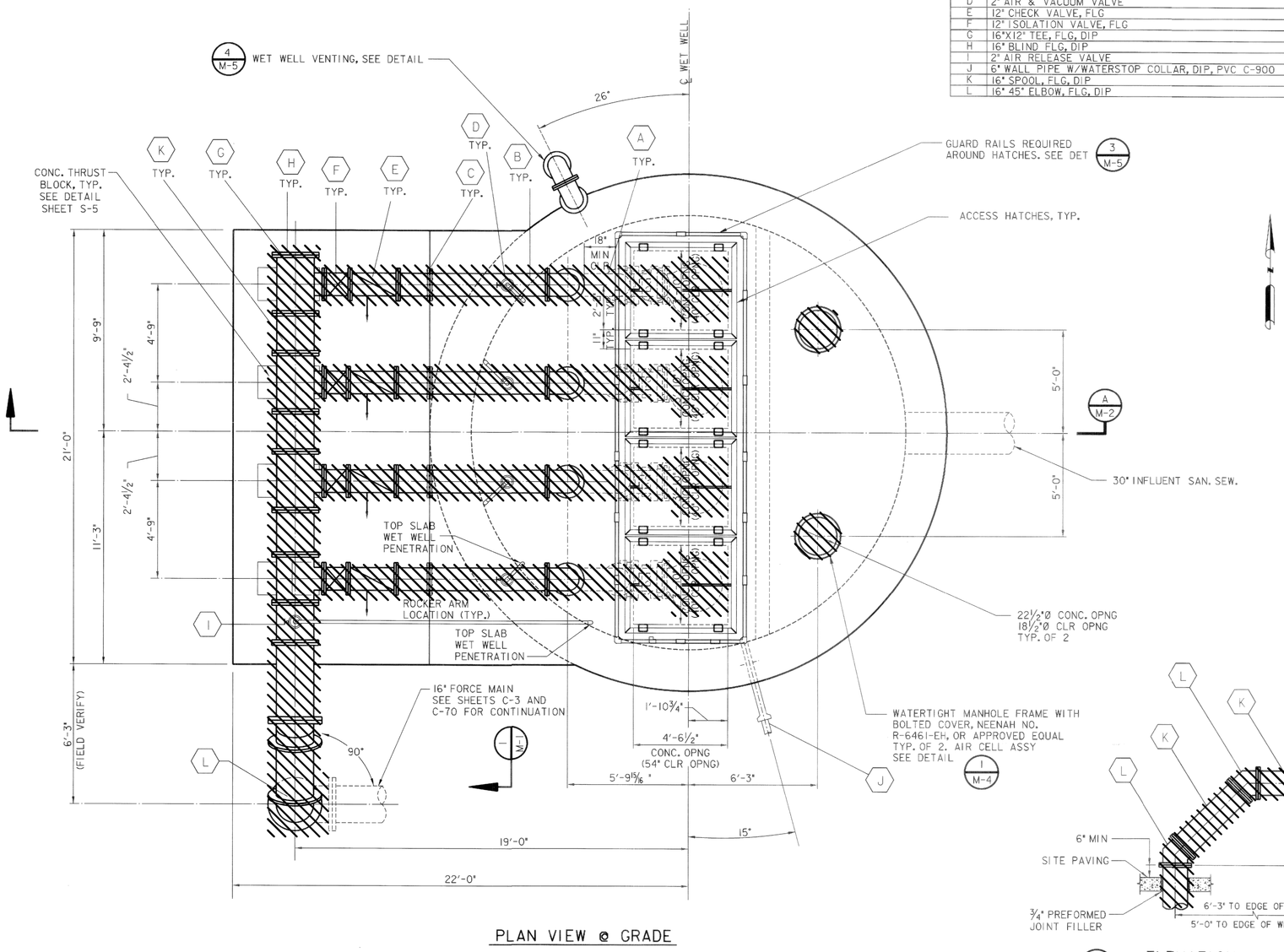

PLAN VIEW @ GRADE

I/M-1 ELEVATION
N.T.S.

-ITEMS TO BE REMOVED

DEMOLITION NOTES:
1. CONTRACTORS TO REMOVE AND SALVAGE ALL EXISTING PUMPS, VALVES, AND APPURTENANCES.
2. WHEN EQUIPMENT ITEMS ARE INDICATED FOR REMOVAL, ALL ANCILLARY UTILITIES, ELECTRICAL ITEMS, AND SUPPORTS SHALL BE COMPLETELY REMOVED UNLESS OTHERWISE INDICATED.
3. ALL PIPING SHOWN AS BEING REMOVED SHALL BE COMPLETELY REMOVED INCLUDING INSULATION, HANGERS, EXPANSION AND ANCHOR BOLTS, AND PIPE SUPPORTS.
4. EXPANSION AND ANCHOR BOLES REMAINING IN WALL, CEILINGS, OR FLOORS SHALL BE POUNDED OR CUT FLUSH WITH THE SURFACE AND PATCHED TO MATCH THE EXISTING FINISH.
5. ALL OPENINGS REMAINING IN FLOORS, WALLS, OR CEILINGS, INCLUDING SLEEVES, AFTER PIPE OR CONDUIT DEMOLITION SHALL BE PATCHED TO MATCH THE EXISTING SURFACE. PENETRATIONS BETWEEN AREAS LABELED NEMA 4 AND NEMA 7 SHALL BE SEALED GAS TIGHT.

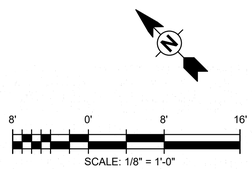

RPS
A TETRA TECH COMPANY
Texas PE Firm Reg. #F-929
575 N. Dairy Ashford, Suite 700, Houston, Texas 77079
T +1 281 589 7257
E usinfrastructure@rpsgroup.com

SURVEYED BY: KUCO INC.
FB NO. F-4578

This document is released for the purposes of interim review only under the authority of:
Jeremy Austin, P.E.
Texas P.E. No. 116816
03/30/2026
It is not to be used for bidding, construction, or permitting purposes.

CITY OF HOUSTON
HOUSTON PUBLIC WORKS

RECONSTRUCTION & REHABILITATION
COH LIFT STATIONS

WILL CLAYTON LS DEMOLITION PLAN

WC-D-1

WBS NUMBER	FOR CITY OF HOUSTON USE ONLY
R-000267-00178-3	
DRAWING SCALE	
AS NOTED	
CITY OF HOUSTON PM	
TAHA LOTIA	
SHEET NO. 203 OF 268	

PLOTTED: 3/27/2026 1:04:53 PM
PLOT STYLE:
Autodesk Docs://200-317106-24001 COH LS Rehab Design/D-LIFT STATIONS-200-317106-24001_v25.rvt

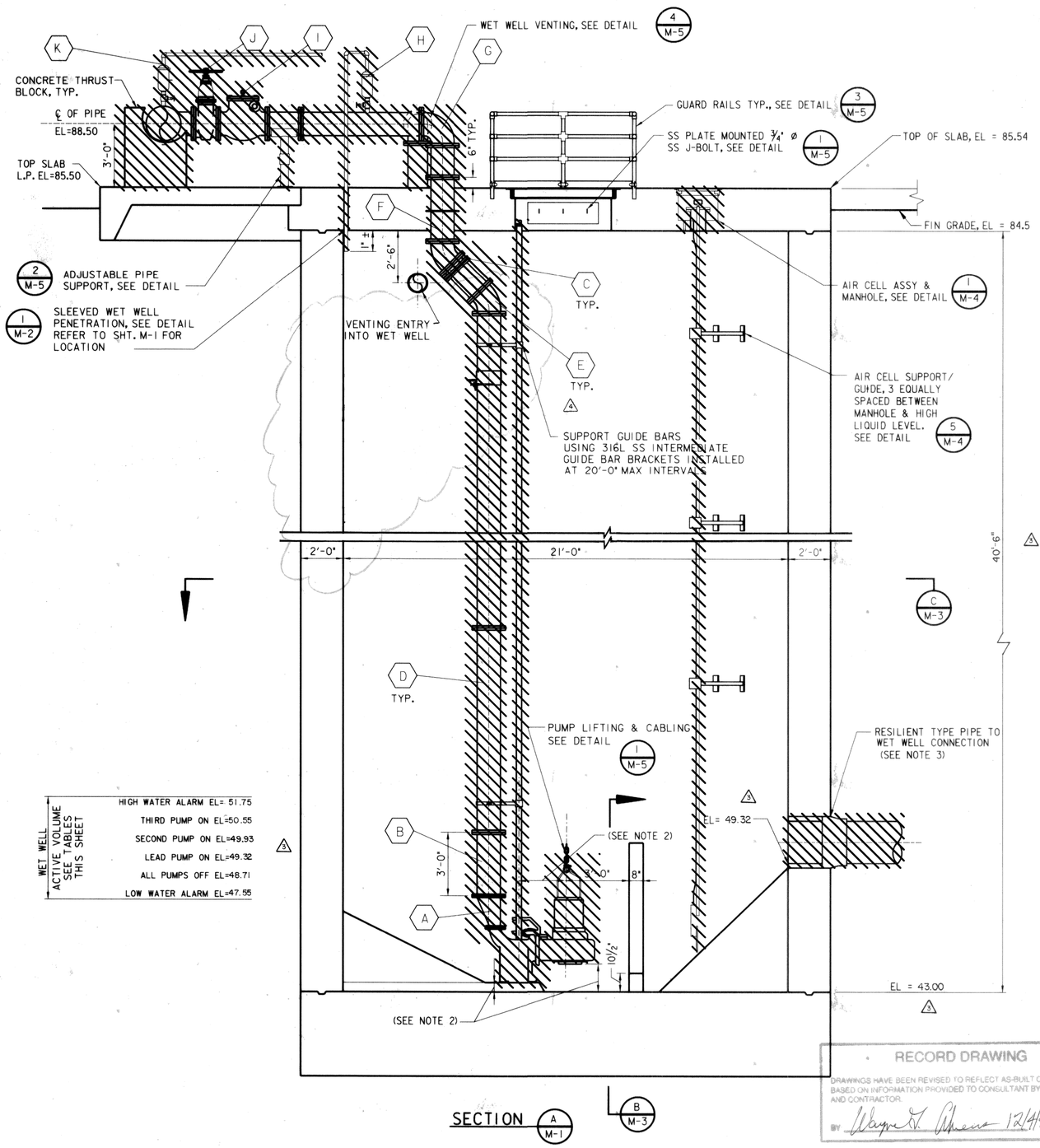

DEMOLITION NOTES:
1. CONTRACTORS TO REMOVE AND SALVAGE ALL EXISTING PUMPS, VALVES, AND APPURTENANCES.
2. WHEN EQUIPMENT ITEMS ARE INDICATED FOR REMOVAL, ALL ANCILLARY UTILITIES, ELECTRICAL ITEMS, AND SUPPORTS SHALL BE COMPLETELY REMOVED UNLESS OTHERWISE INDICATED.
3. ALL PIPING SHOWN AS BEING REMOVED SHALL BE COMPLETELY REMOVED INCLUDING INSULATION, HANGERS, EXPANSION AND ANCHOR BOLTS, AND PIPE SUPPORTS.
4. EXPANSION AND ANCHOR BOLES REMAINING IN WALL, CEILINGS, OR FLOORS SHALL BE POUNDED OR CUT FLUSH WITH THE SURFACE AND PATCHED TO MATCH THE EXISTING FINISH.
5. ALL OPENINGS REMAINING IN FLOORS, WALLS, OR CEILINGS, INCLUDING SLEEVES, AFTER PIPE OR CONDUIT DEMOLITION SHALL BE PATCHED TO MATCH THE EXISTING SURFACE. PENETRATIONS BETWEEN AREAS LABELED NEMA 4 AND NEMA 7 SHALL BE SEALED GAS TIGHT.

NO	DATE	REVISION	APP.

-ITEMS TO BE REMOVED

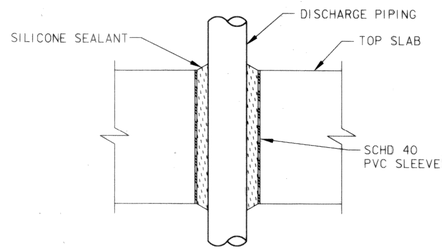

1/M-2 SLEEVED TOP SLAB PENETRATION

PIPE AND FITTING SCHEDULE	
ITEM	DESCRIPTION
A	12"X6" ECCENTRIC REDUCER, FLG, DIP (SEE NOTE 2)
B	12" SPOOL, FLG, DIP
C	12" FLG COUPLING ADAPTOR
D	12" SPOOL, FLG X PE, DIP
E	12" 45° ELBOW, FLG, DIP
F	12" WALLPIPE W/WATER STOP COLLAR, FLG, DIP
G	12" 90° ELBOW, FLG, DIP
H	2" AIR & VACUUM VALVE
I	12" CHECK VALVE, FLG
J	12" ISOLATION VALVE, FLG
K	2" AIR RELEASE VALVE

STATION OPERATION TABLES

RISING LEVEL CYCLE		
WATER LEVEL ELEVATION	ACTION	PUMP(S) IN OPERATION
48.71	LOW WATER LEVEL ALARM OFF	ALL PUMPS ARE OFF
49.32	LEAD PUMP TURNS ON	LEAD PUMP ON
49.93	SECOND PUMP TURNS ON	LEAD & SECOND PUMP ON
50.55	THIRD PUMP TURNS ON	ALL PUMPS ON
51.75	HIGH WATER ALARM ON	HIGH WATER ALARM SOUND
FALLING LEVEL CYCLE		
WATER LEVEL ELEVATION	ACTION	PUMP(S) IN OPERATION
50.55	HIGH WATER LEVEL ALARM OFF	ALL PUMPS ON
49.93	LEAD PUMP TURNS OFF	SECOND & THIRD PUMPS ON
49.32	SECOND PUMP TURNS OFF	THIRD PUMP ON
48.71	THIRD PUMP TURNS OFF	ALL PUMPS STOPPED - STANDBY PUMP SWITCHES TO LEAD PUMP
47.55	LOW WATER ALARM ON	LOW WATER ALARM SOUND

PUMP(S) IN OPERATION	OPERATING CAPACITY		PUMP SPEED RPM	PUMP PASSES SPHERE (INCHES)	MIN PUMP DISCHARGE ELBOW SIZE IN X OUT
	TOTAL GPM	T.D. HEAD IN FEET			
ONE PUMP ALONE	1750	42.40	1100	3	8"X6"
TWO PUMPS IN PARALLEL	2700	63.50			
THREE PUMPS IN PARALLEL	3200	74.10			

RECORD DRAWING
DRAWINGS HAVE BEEN REVISED TO REFLECT AS-BUILT CONDITIONS BASED ON INFORMATION PROVIDED TO CONSULTANT BY THE OWNER AND CONTRACTOR.
BY Wayne T. Abrams 12/4/07

8' 0' 8' 16'
SCALE: 1/8" = 1'-0"

RPS A TETRA TECH COMPANY
Texas PE Firm Reg. #F-929
575 N. Dairy Ashford, Suite 700, Houston, Texas 77079
T +1 281 589 7257
E usinfrastructure@rpsgroup.com

SURVEYED BY: KUCO INC.
FB NO. F-4578

This document is released for the purposes of interim review only under the authority of:

Jeremy Austin, P.E.
Texas P.E. No. 116816
03/30/2026

It is not to be used for bidding, construction, or permitting purposes.

CITY OF HOUSTON
HOUSTON PUBLIC WORKS

RECONSTRUCTION & REHABILITATION
COH LIFT STATIONS

WILL CLAYTON LS DEMOLITION PLAN

WC-D-2

WBS NUMBER	FOR CITY OF HOUSTON USE ONLY
R-000267-00178-3	
DRAWING SCALE	
AS NOTED	
CITY OF HOUSTON PM	
TAHA LOTIA	
SHEET NO. 204 OF 268	

NOTES:
1. SEE DETAIL AND STRUCTURAL DRAWINGS FOR DIMENSIONS AND INFORMATION NOT SHOW.
2. ALL PIPING TO BE FLANGED, NO FLANGED COUPLING ADAPTERS OR VICTAULIC STYLE COUPLINGS PERMITTED.
3. DIMENSIONS NOTED ARE RELATIVE TO THE PUMP SIZE AND MANUFACTURER SELECTED. CONTRACTOR SHALL VERIFY SIZE AND LOCATION OF HATCHES WITH PUMP MANUFACTURER.
4. INSTALL PLUG VALVES TO OPEN UPWARD AND CLOSE TO A SEATED POSITION.
5. INSTALL CHECK VALVES SO THAT THE WEIGHT LEVER POSITION IS APPROXIMATELY 45 DEGREES BELOW THE VALVE HORIZONTAL CENTER LINE IN THE CLOSED POSITION; AND APPROXIMATELY 45 DEGREES ABOVE THE VALVE HORIZONTAL CENTER LINE IN THE FULL OPEN POSITION.
6. LABEL HATCHES WITH THE CORRESPONDING PUMP NUMBER USING A 12-INCH BY 12-INCH 316SS PLATE ENGRAVED WITH 6-INCH LETTERING WELDED TO THE HATCH.

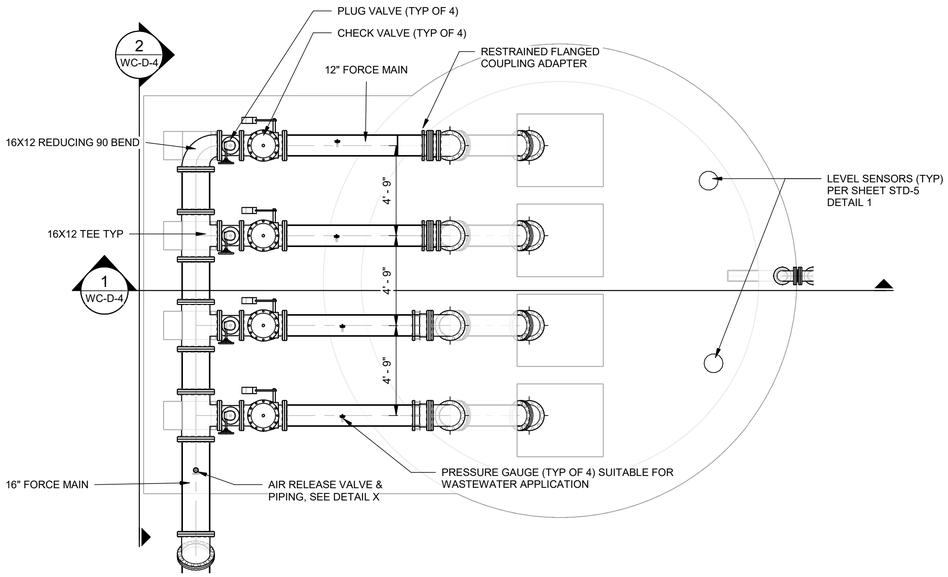

1 WILL CLAYTON PLAN VIEW
SCALE: 1/4" = 1'-0"

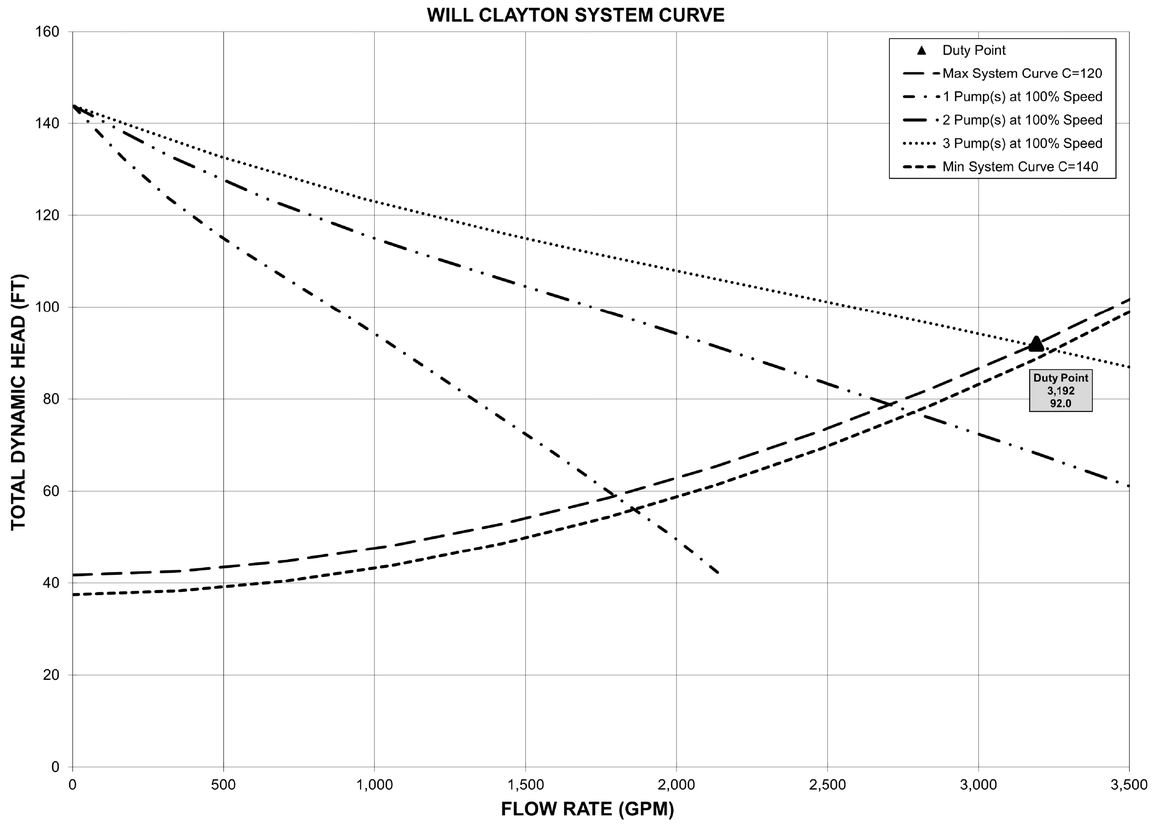

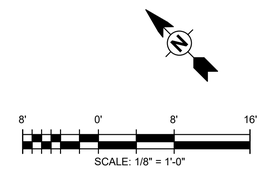

NO.	DATE	REVISION	APP.

RPS A TETRA TECH COMPANY
Texas PE Firm Reg. #F-929
575 N. Dairy Ashford, Suite 700, Houston, Texas 77079
T +1 281 589 7257
E usinfrastructure@rpsgroup.com

This document is released for the purposes of interim review only under the authority of:

Jeremy Austin, P.E.
Texas P.E. No. 116816
03/30/2026

It is not to be used for bidding, construction, or permitting purposes.

SURVEYED BY: KUCO INC.
FB NO. F-4578

CITY OF HOUSTON
HOUSTON PUBLIC WORKS

RECONSTRUCTION & REHABILITATION
COH LIFT STATIONS

WILL CLAYTON LS PLAN

WC-D-3

WBS NUMBER
R-000267-00178-3
DRAWING SCALE
AS NOTED
CITY OF HOUSTON PM
TAHA LOTIA
SHEET NO. 205 OF 268

FOR CITY OF HOUSTON USE ONLY

PLOTTED: 3/27/2026 1:04:57 PM
PLOT STYLE:
Autodesk Docs://200-317106-24001 COH LS Rehab Design/D-LIFT STATIONS-200-317106-24001_v25.rvt

NOTES:
1. SEE DETAIL AND STRUCTURAL DRAWINGS FOR DIMENSIONS AND INFORMATION NOT SHOW.
2. ALL PIPING TO BE FLANGED, NO FLANGED COUPLING ADAPTERS OR VICTAULIC STYLE COUPLINGS PERMITTED.
3. DIMENSIONS NOTED ARE RELATIVE TO THE PUMP SIZE AND MANUFACTURER SELECTED. CONTRACTOR SHALL VERIFY.
4. INSTALL PLUG VALVES TO OPEN UPWARD AND CLOSE TO A SEATED POSITION.
5. INSTALL CHECK VALVES SO THAT THE WEIGHT LEVER POSITION IS APPROXIMATELY 45 DEGREES BELOW THE VALVE HORIZONTAL CENTER LINE IN THE CLOSED POSITION; AND APPROXIMATELY 45 DEGREES ABOVE THE VALVE HORIZONTAL CENTER LINE IN THE FULL OPEN POSITION.
6. LABEL HATCHES WITH THE CORRESPONDING PUMP NUMBER USING A 12-INCH BY 12-INCH 316SS PLATE ENGRAVED WITH 6-INCH LETTERING WELDED TO THE HATCH.
7. BASIS OF DESIGN IS FLYGT NP3202 HT3 ~462 WITH 278 MM DIAMETER IMPELLER.

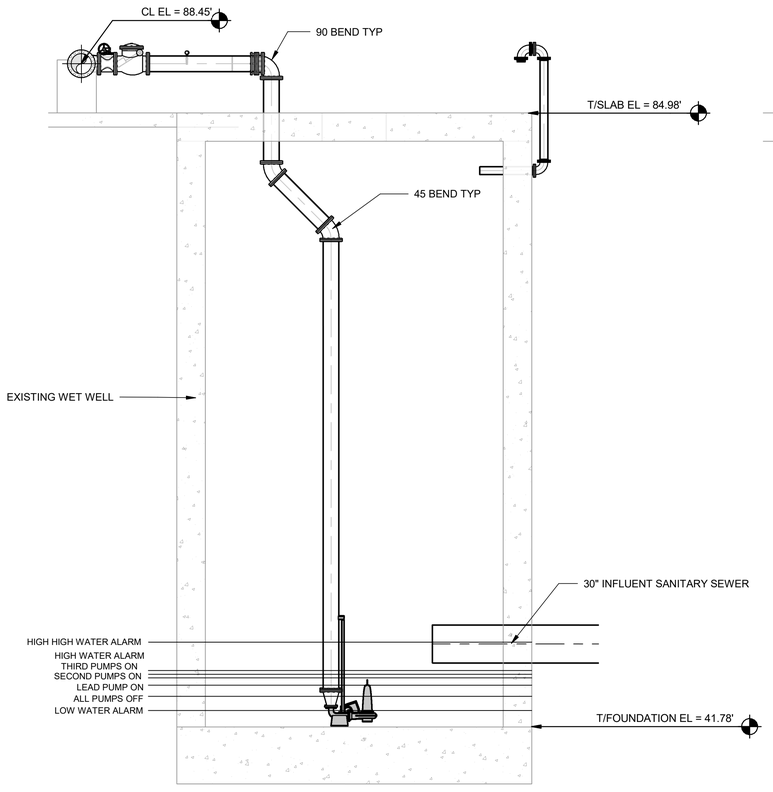

WILL CLAYTON SECTION VIEW
SCALE: 3/16" = 1'-0"

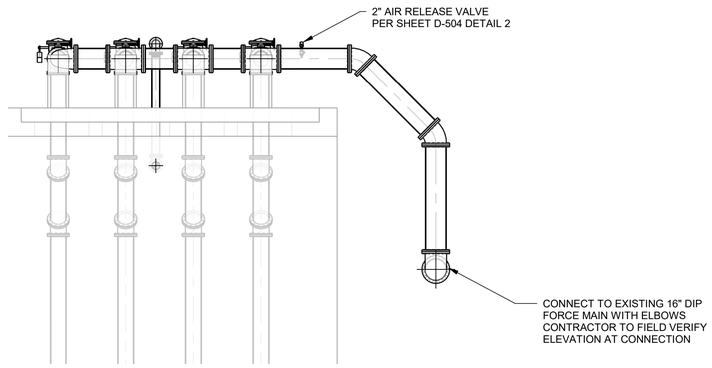

WILL CLAYTON SECTION
SCALE: 3/16" = 1'-0"

PUMP DATA TABLE

PUMP CHARACTERISTICS	PUMP NO. 1	PUMP NO. 2	PUMP NO. 3
MOTOR DATA			
NOMINAL SIZE (HP)	45	45	45
MAX SPEED (RPM)	1775	1775	1775
SOLIDS PASSAGE			
MIN SPHERE (IN)	3.15	3.15	3.15
CAPACITY (GPM)			
DESIGN	1064	1064	1064
RUNOUT	2,305	2,305	2,305
DISCHARGE HEAD (FT)			
DESIGN	92.23	92.23	92.23
RUNOUT	32.62	32.62	32.62
SHUTOFF	143.67	143.67	143.67
EFFICIENCY (%)			
DESIGN	69.00	69.00	69.00
NPSHR (FT)			
DESIGN	16.57	16.57	16.57
RUNOUT	44.66	44.66	44.66
PUMP CYCLE TIME	6	6	6
CUMULATIVE CAPACITY (GPM)	1794	2685	3136

RISING LEVEL CYCLE			
WATER LEVEL DEPTH	WATER LEVEL ELEVATION	ACTION	PUMP(S) IN OPERATION
2.15	43.93	PUMPS OFF LEVEL - NO ACTION	ALL PUMPS OFF
2.93	44.71	LEAD PUMP TURNS ON	LEAD PUMP ON
3.44	45.22	SECOND PUMP TURNS ON	LEAD & SECOND PUMPS ON
3.70	45.48	THIRD PUMP TURNS ON	LEAD, SECOND, & THIRD PUMPS ON
3.96	45.74	HIGH WATER LEVEL ALARM ON	HIGH WATER ALARM SOUND
5.96	47.74	HIGH HIGH WATER LEVEL ALARM (FLOAT ON LEVEL)	ALL PUMPS ON FLOATS
FALLING LEVEL CYCLE			
WATER LEVEL DEPTH	WATER LEVEL ELEVATION	ACTION	PUMP(S) IN OPERATION
5.96	47.74	FLOAT OFF LEVEL	ALL PUMPS OFF (FLOATS)
3.96	45.74	HIGH WATER LEVEL ALARM OFF	LEAD, SECOND & THIRD PUMPS ON
3.70	45.48	LEAD PUMP TURNS OFF	SECOND & THIRDS PUMPS ON
3.44	45.22	SECOND PUMP TURNS OFF	THIRD PUMP ON
2.93	44.71	THIRD PUMP TURNS OFF	ALL PUMPS STOPPED - STANDBY PUMP SWITCHES TO LEAD PUMP
1.15	42.93	LOW LEVEL ALARM	-

8' 0' 8' 16'
SCALE: 1/8" = 1'-0"

NO.	DATE	REVISION	APP.

RPS A TETRA TECH COMPANY
Texas PE Firm Reg. #F-929
575 N. Dairy Ashford, Suite 700, Houston, Texas 77079
T +1 281 589 7257
E usinfrastructure@rpsgroup.com

SURVEYED BY: KUCO INC.
FB NO. F-4578

This document is released for the purposes of interim review only under the authority of:
Jeremy Austin, P.E.
Texas P.E. No. 116816
03/30/2026
It is not to be used for bidding, construction, or permitting purposes.

CITY OF HOUSTON
HOUSTON PUBLIC WORKS

RECONSTRUCTION & REHABILITATION
COH LIFT STATIONS

WILL CLAYTON LS SECTIONS

WC-D-4

WBS NUMBER	FOR CITY OF HOUSTON USE ONLY
R-000267-00178-3	
DRAWING SCALE	
AS NOTED	
CITY OF HOUSTON PM	
TAHA LOTIA	
SHEET NO. 206 OF 268	

PLOTTED: 3/27/2026 1:05:02 PM
PLOT STYLE:
Autodesk Docs://200-317106-24001 COH LS Rehab Design/D-LIFT STATIONS-200-317106-24001_v25.rvt

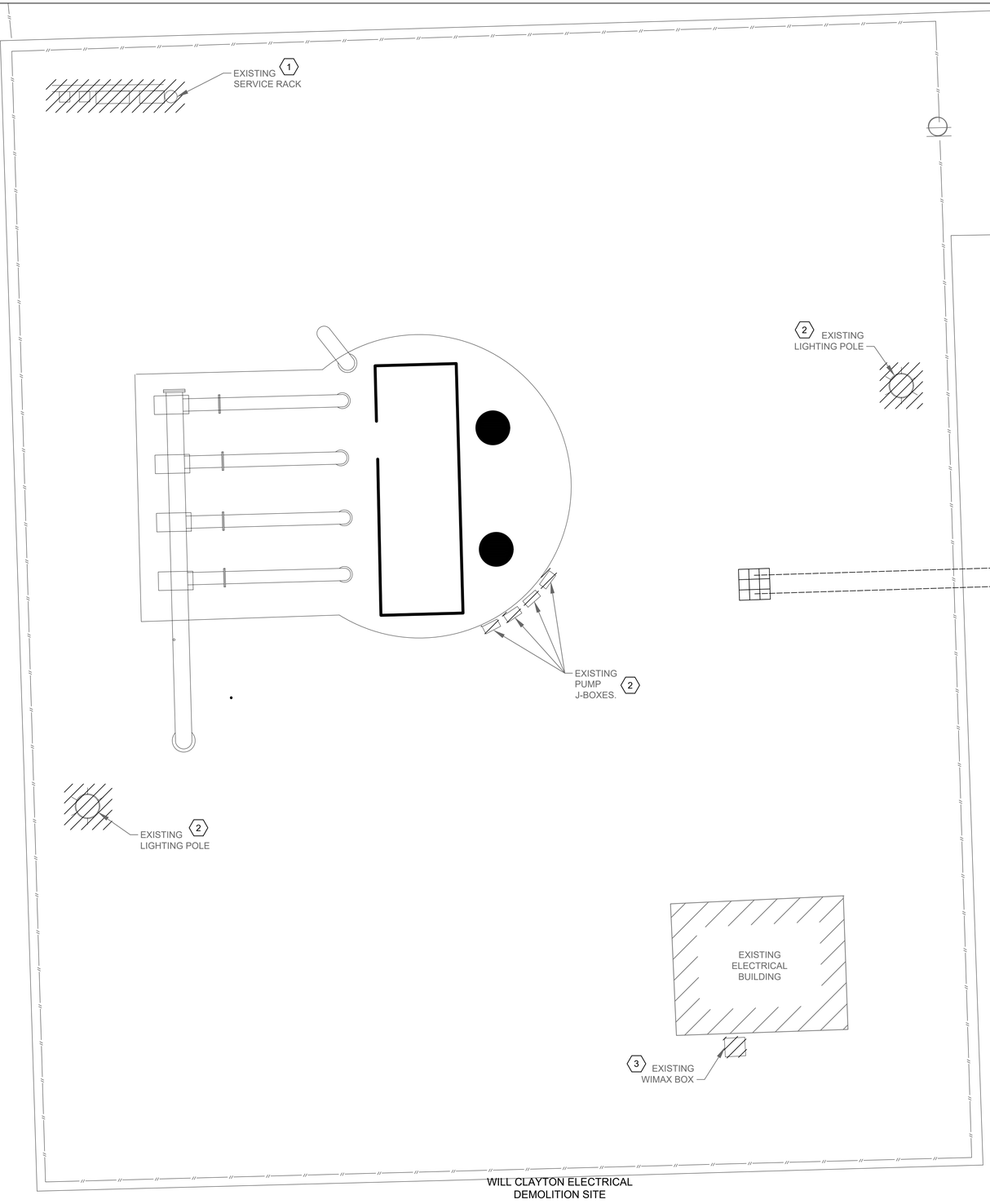

WILL CLAYTON ELECTRICAL
DEMOLITION SITE

PLAN

1/4"= 1'-0"



EXISTING SERVICE RACK

PHOTOGRAPH A - 1
NTS



EXISTING PUMP NO.1 & NO.2
NO.3 & NO.4 JUNCTION BOXES

PHOTOGRAPH B - 1
NTS



EXISTING LIGHTING POLE

PHOTOGRAPH C - 2
NTS

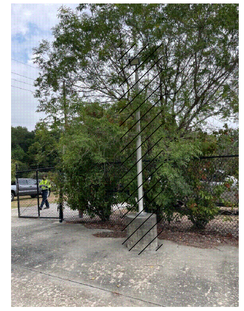

EXISTING LIGHTING POLE

PHOTOGRAPH D - 2
NTS

NOTES BY SYMBOL "#":

1. EXISTING SERVICE RACK AND ASSOCIATED CONDUITS, WIRE, TO BE DEMOLISHED AND REMOVED.
2. EXISTING LIGHTING POLE AND ASSOCIATED CONDUITS, WIRE, TO BE DEMOLISHED AND REMOVED.
3. EXISTING WIMAX BOX AND ASSOCIATED CONDUITS, WIRE, TO BE DEMOLISHED AND REMOVED.



EXISTING WIMAX BOX

PHOTOGRAPH E - 3
NTS

NO.	DATE	REVISION	APP.
	MM/DD/YY	BRIEF DESCRIPTION	XXX
	MM/DD/YY	BRIEF DESCRIPTION	XXX
	MM/DD/YY	BRIEF DESCRIPTION	XXX

RPS A TETRA TECH COMPANY
Texas PE Firm Reg. #F-929
575 N. Dairy Ashford, Suite 700,
Houston, Texas 77079
T +1 281 589 7257
E usinfrastructure@rpsgroup.com

SURVEYED BY:
FB NO. F-4578

FOR INTERIM REVIEW ONLY NOT INTENDED FOR PERMIT, BIDDING OR CONSTRUCTION PURPOSES.
ENGINEER:
HOSS FOROUZAN
P.E. SERIAL NO.77748
03/30/2026

CITY OF HOUSTON
HOUSTON PUBLIC WORKS

RECONSTRUCTION & REHABILITATION
COH LIFT STATIONS

WILL CLAYTON LIFT STATION ELECTRICAL DEMOLITION SITE PLAN

WBS NUMBER	FOR CITY OF HOUSTON USE ONLY
R-000267-00178-3	
DRAWING SCALE	
AS NOTED	
CITY OF HOUSTON PM	
TAHA LOTIA	
SHEET NO. 207 OF 268	

WC-E-1

FILE PATH: O:\H8109_Lift Station Rehabilitation And Reconstruction (Tetratech)\6 Drawings\Electrical\Working\Will Clayton\Will Clayton_E-01.dwg PLOT STYLE: COH.ctb PLOTTED: 3/30/2026 4:07 PM

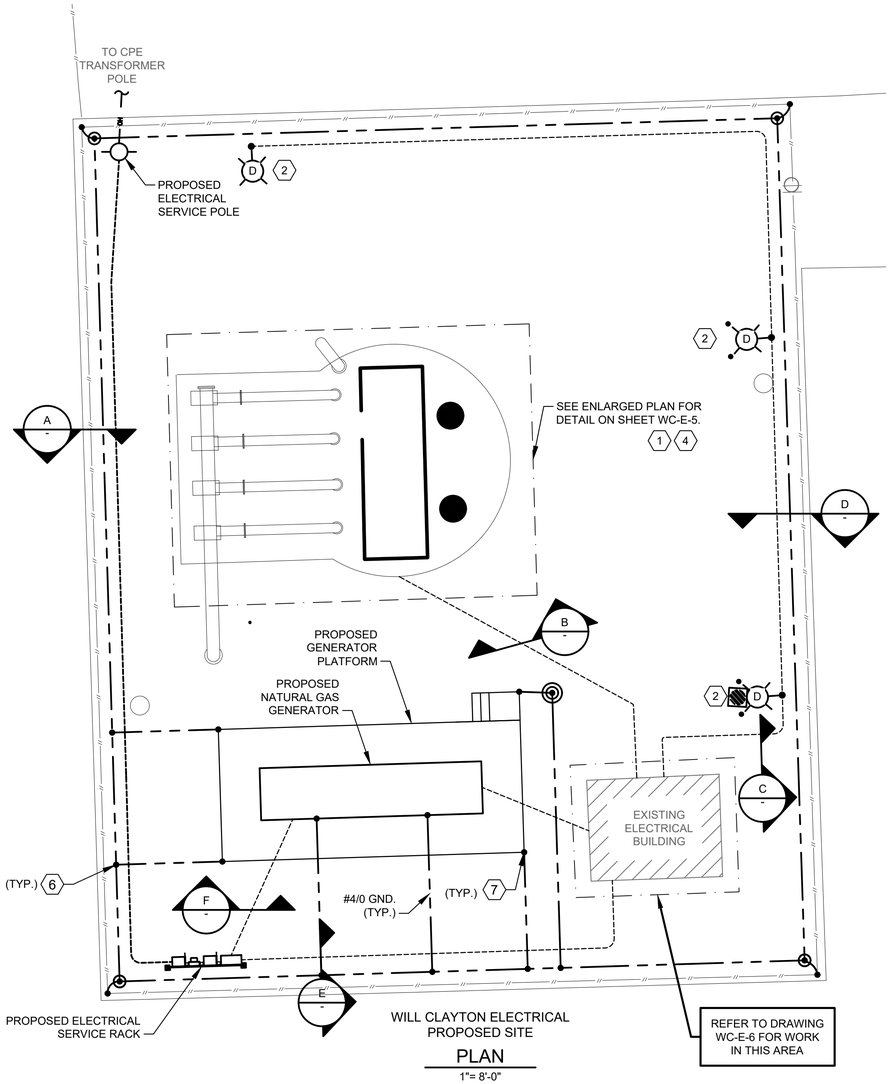

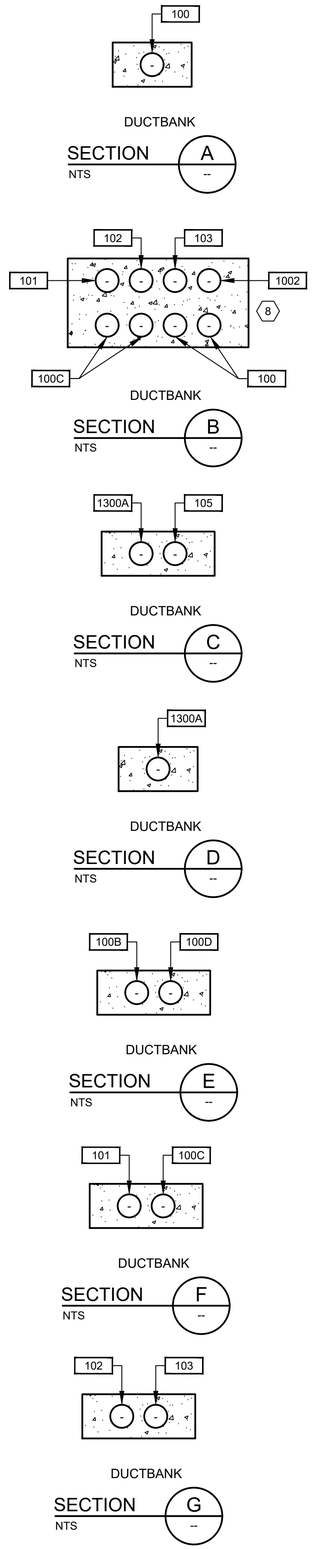

NOTES BY SYMBOL "⟨#⟩":

1. THE ELECTRICAL INSTALLATION IN THE WET WELL SHALL BE EXPLOSION PROOF, IN ACCORDANCE WITH THE NATIONAL ELECTRICAL CODE FOR CLASS I, DIVISION 1 LOCATIONS.
2. YARD LIGHT CONTROLLED BY LIGHTING SWITCH.
3. LIGHT SWITCH FOR YARD LIGHT CONTROL.
4. INSIDE WETWELL RATED NEMA CLASS 1, DIV. 1, OUTSIDE ABOVE GROUND, AROUND WETWELL RATED CLASS 1, DIV. 2 ACCORDING TO NFPA 820.
5. GROUNDING LOOP SHALL BE BURIED 30" BELOW FINISHED GRADE.
6. #4/0 BARE COPPER GROUND TO BE BONDED TO HANDRAIL.
7. #4/0 BARE COPPER GROUND TO BE BONDED TO PLATFORM STRUCTURAL STEEL.
8. REUSE EXISTING CONDUITS AND INSTALL NEW WIRING.

NO.	DATE	REVISION	APP.
	MM/DD/YY	BRIEF DESCRIPTION	XXX
	MM/DD/YY	BRIEF DESCRIPTION	XXX
	MM/DD/YY	BRIEF DESCRIPTION	XXX

RPS A TETRA TECH COMPANY
Texas PE Firm Reg. #F-929
575 N. Dairy Ashford, Suite 700, Houston, Texas 77079
T +1 281 589 7257
E usinfrastructure@rpsgroup.com

SURVEYED BY:
FB NO. F-4578

FOR INTERIM REVIEW ONLY NOT INTENDED FOR PERMIT, BIDDING OR CONSTRUCTION PURPOSES.
ENGINEER:
HOSS FOROUZAN
P.E. SERIAL NO.77748
03/30/2026

CITY OF HOUSTON
HOUSTON PUBLIC WORKS

RECONSTRUCTION & REHABILITATION
COH LIFT STATIONS

WILL CLAYTON LIFT STATION ELECTRICAL PROPOSED SITE PLAN

WBS NUMBER	FOR CITY OF HOUSTON USE ONLY
R-000267-00178-3	
DRAWING SCALE	
AS NOTED	
CITY OF HOUSTON PM	
TAHA LOTIA	
SHEET NO. 208 OF 268	

WC-E-2

FILE PATH: O:\H8109_Lift Station Rehabilitation And Reconstruction (Tetratech)\6 Drawings\Electrical\Working\Will Clayton\Will Clayton_E-02.dwg PLOT STYLE: GAI.ctb PLOTTED: 3/30/2026 4:07 PM

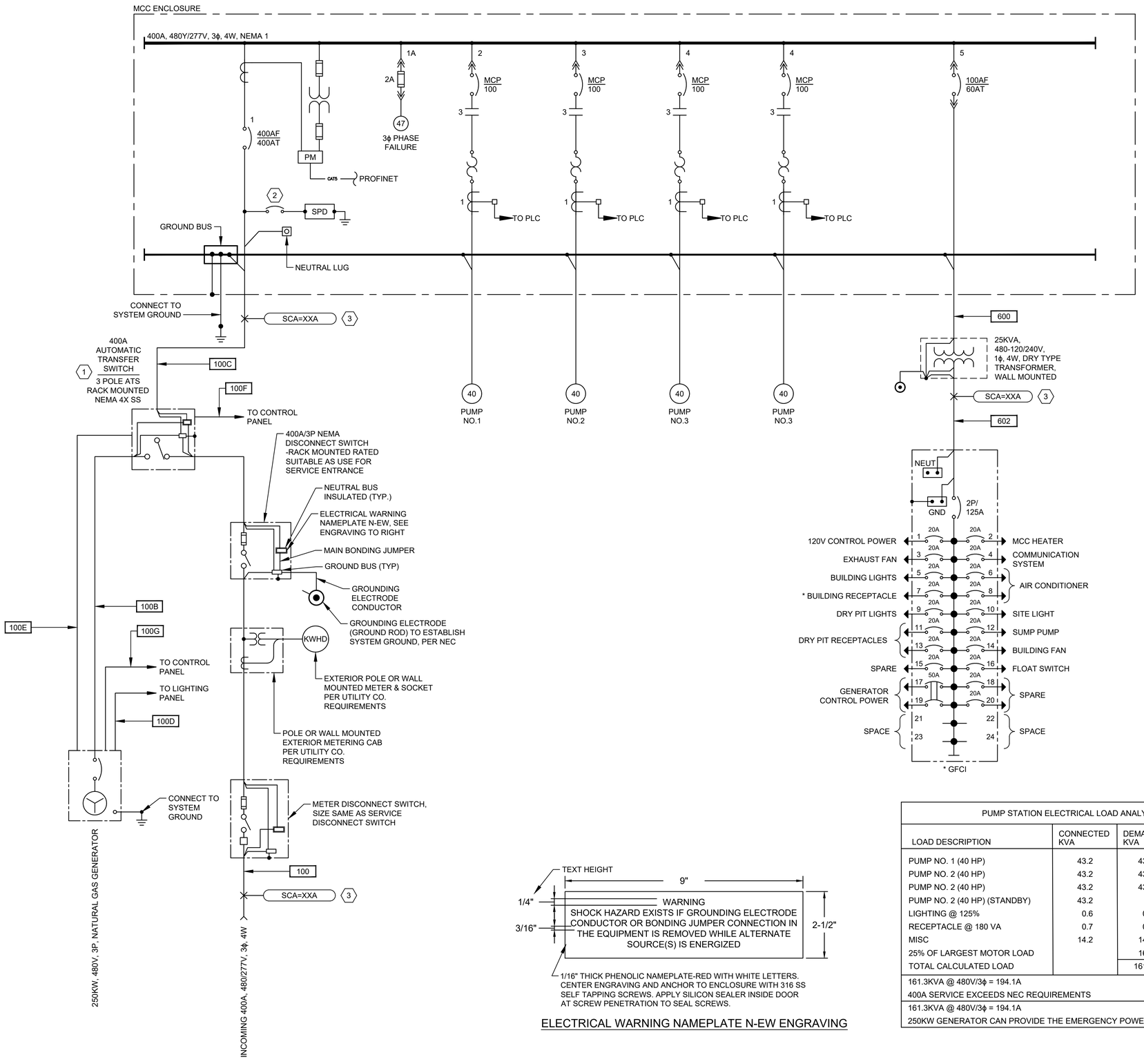

NOTES BY SYMBOL "#":

1. PROVIDE A NORMALLY OPEN (NO) AUXILIARY CONTACT ON BOTH ON POSITIONS.
2. PROVIDE BREAKER ACCORDING TO MANUFACTURER'S REQUIREMENTS.
3. POINT TO POINT METHOD IS USED FOR SHORT CIRCUIT CURRENT CALCULATION.
4. CONTRACTOR SHALL PROVIDE A PERMANENTLY AFFIXED LABEL (2' X 3") SHOWING THE AVAILABLE FAULT CURRENT AND CALCULATION DATE. THE LABEL SHALL BE BLUE LETTERING ON A CONTRASTING BACKGROUND.
5. THE INSULATION TYPES OF ALL ELECTRICAL CONDUCTORS USED IN THE PROJECT HAVE BEEN SPECIFIED IN ELECTRICAL SPECIFICATIONS (16120, 16121, AND 16122). THE TYPES OF CONDUITS USED IN THE PROJECT HAS BEEN SPECIFIED IN ELECTRICAL SPECIFICATIONS 16111.

NO.	DATE	REVISION	APP.
	MM/DD/YY	BRIEF DESCRIPTION	XXX
	MM/DD/YY	BRIEF DESCRIPTION	XXX
	MM/DD/YY	BRIEF DESCRIPTION	XXX

ELECTRICAL WARNING NAMEPLATE N-EW ENGRAVING

PUMP STATION ELECTRICAL LOAD ANALYSIS			
LOAD DESCRIPTION	CONNECTED KVA	DEMAND KVA	EMERGENCY POWER KVA
PUMP NO. 1 (40 HP)	43.2	43.2	43.2
PUMP NO. 2 (40 HP)	43.2	43.2	43.2
PUMP NO. 2 (40 HP)	43.2	43.2	43.2
PUMP NO. 2 (40 HP) (STANDBY)	43.2	--	--
LIGHTING @ 125%	0.6	0.8	0.8
RECEPTACLE @ 180 VA	0.7	0.7	0.7
MISC	14.2	14.2	14.2
25% OF LARGEST MOTOR LOAD		16.0	16.0
TOTAL CALCULATED LOAD		161.3	161.3
161.3KVA @ 480V/3ϕ = 194.1A 400A SERVICE EXCEEDS NEC REQUIREMENTS			
161.3KVA @ 480V/3ϕ = 194.1A 250KW GENERATOR CAN PROVIDE THE EMERGENCY POWER			

RPS A TETRA TECH COMPANY
Texas PE Firm Reg. #F-929
575 N. Dairy Ashford, Suite 700, Houston, Texas 77079
T +1 281 589 7257
E usinfrastructure@rpsgroup.com

SURVEYED BY:
FB NO. F-4578

FOR INTERIM REVIEW ONLY NOT INTENDED FOR PERMIT, BIDDING OR CONSTRUCTION PURPOSES.
ENGINEER:
HOSS FOROUZAN
P.E. SERIAL NO.77748
03/30/2026

CITY OF HOUSTON
HOUSTON PUBLIC WORKS

RECONSTRUCTION & REHABILITATION
COH LIFT STATIONS

WILL CLAYTON LIFT STATION ELECTRICAL SINGLE LINE DIAGRAM

WBS NUMBER	FOR CITY OF HOUSTON USE ONLY
R-000267-00178-3	
DRAWING SCALE	
AS NOTED	
CITY OF HOUSTON PM	
TAHA LOTIA	
SHEET NO. 209 OF 268	

WC-E-3

FILE PATH: O:\H8109_Lift Station Rehabilitation And Reconstruction (Tetratech)\6 Drawings\Electrical\Working\Will Clayton\Will Clayton_E-03.dwg PLOT STYLE: GAI.ctb PLOTTED: 3/30/2026 4:07 PM

PLOTTED: 3/30/2026 4:07 PM
FILE PATH: O:\H8109_Lift Station Rehabilitation And Reconstruction (Tetratech)\6 Drawings\Electrical\Working\Will Clayton\Will Clayton_E-04.dwg PLOT STYLE: GAI.ctb

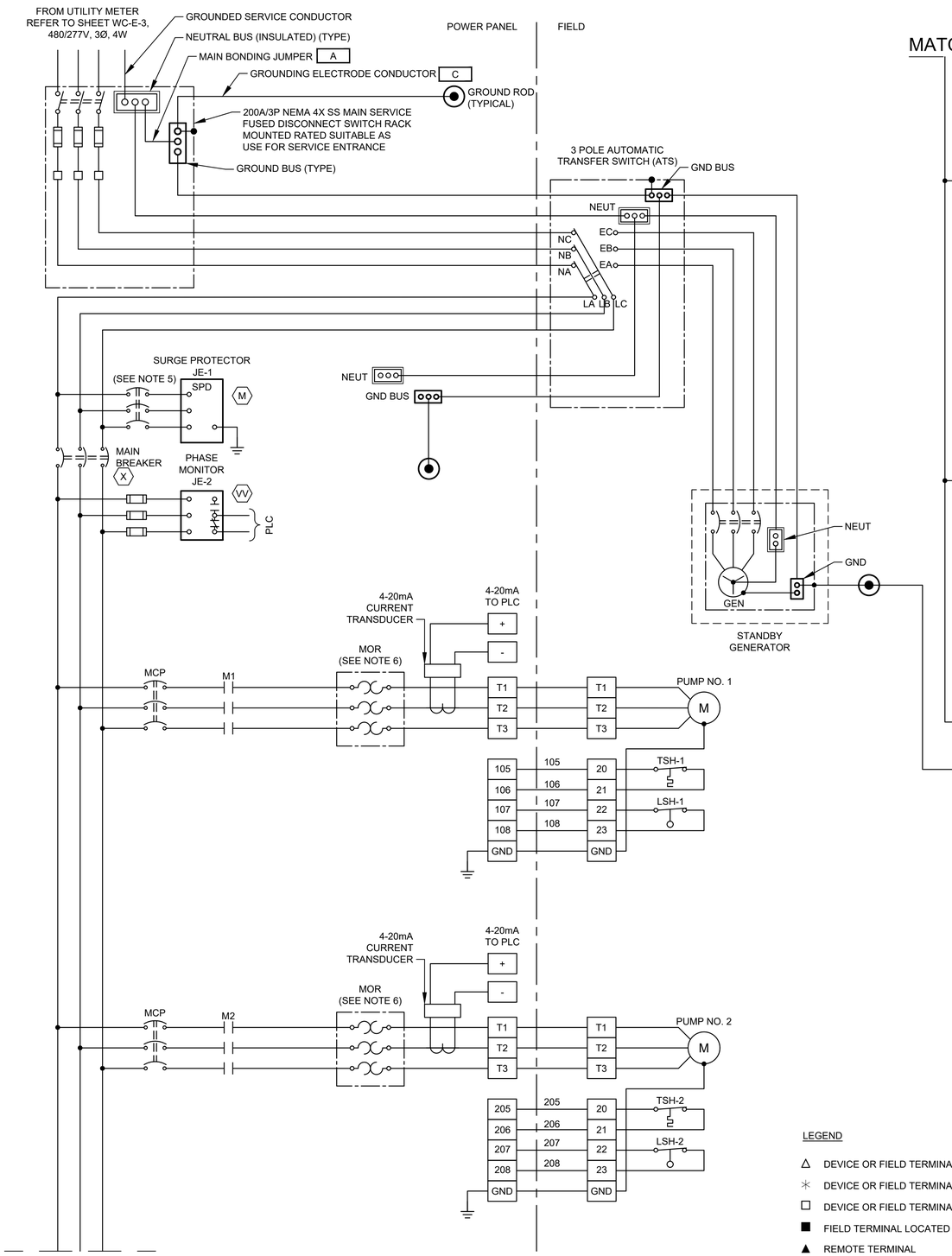

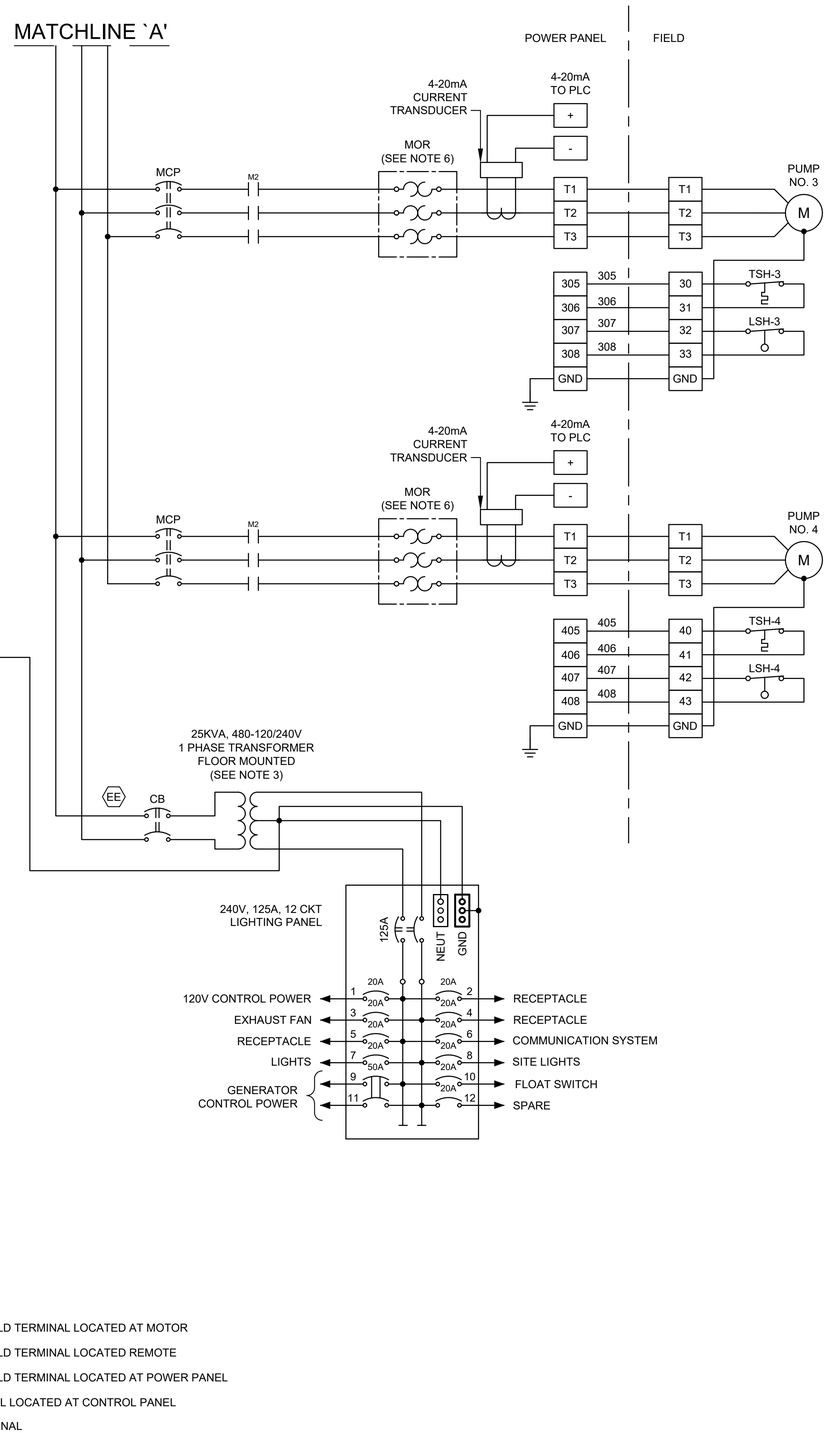

NOTES:

1. UNLESS OTHERWISE INDICATED, ALL DEVICES WITHOUT FURTHER DESIGNATION ARE LOCATED AT THE CONTROL PANEL.
2. NOT USED.
3. CONTRACTOR TO REVISE DWG. BASED ON MANUFACTURE AND SIZE.
4. CONTRACTOR SHALL TERMINATE POWER & CONTROL WIRES PER MANUFACTURER'S REQUIREMENTS.
5. PROVIDE BREAKER SIZE ACCORDING TO MANUFACTURER'S REQUIREMENTS.
6. THE COMBINATION OF CT AND MOTOR OVERLOAD RELAY IF REQUIRED.

NO.	DATE	REVISION	APP.
	MM/DD/YY	BRIEF DESCRIPTION	XXX
	MM/DD/YY	BRIEF DESCRIPTION	XXX
	MM/DD/YY	BRIEF DESCRIPTION	XXX

LEGEND

- △ DEVICE OR FIELD TERMINAL LOCATED AT MOTOR
- ✳ DEVICE OR FIELD TERMINAL LOCATED REMOTE
- □ DEVICE OR FIELD TERMINAL LOCATED AT POWER PANEL
- ■ FIELD TERMINAL LOCATED AT CONTROL PANEL
- ▲ REMOTE TERMINAL
- ● DEVICE TERMINAL NO.
- ◆ PC INTERFACE TERMINAL

RPS A TETRA TECH COMPANY
Texas PE Firm Reg. #F-929
575 N. Dairy Ashford, Suite 700,
Houston, Texas 77079
T +1 281 589 7257
E usinfrastructure@rpsgroup.com

SURVEYED BY:
FB NO. F-4578

FOR INTERIM REVIEW ONLY NOT INTENDED FOR PERMIT, BIDDING OR CONSTRUCTION PURPOSES.
ENGINEER:
HOSS FOROUZAN
P.E. SERIAL NO.77748
03/30/2026

CITY OF HOUSTON
HOUSTON PUBLIC WORKS

RECONSTRUCTION & REHABILITATION
COH LIFT STATIONS

WILL CLAYTON LIFT STATION ELECTRICAL THREE LINE DIAGRAM

WBS NUMBER	FOR CITY OF HOUSTON USE ONLY
R-000267-00178-3	
DRAWING SCALE	
AS NOTED	
CITY OF HOUSTON PM	
TAHA LOTIA	
SHEET NO. 210 OF 268	

WC-E-4

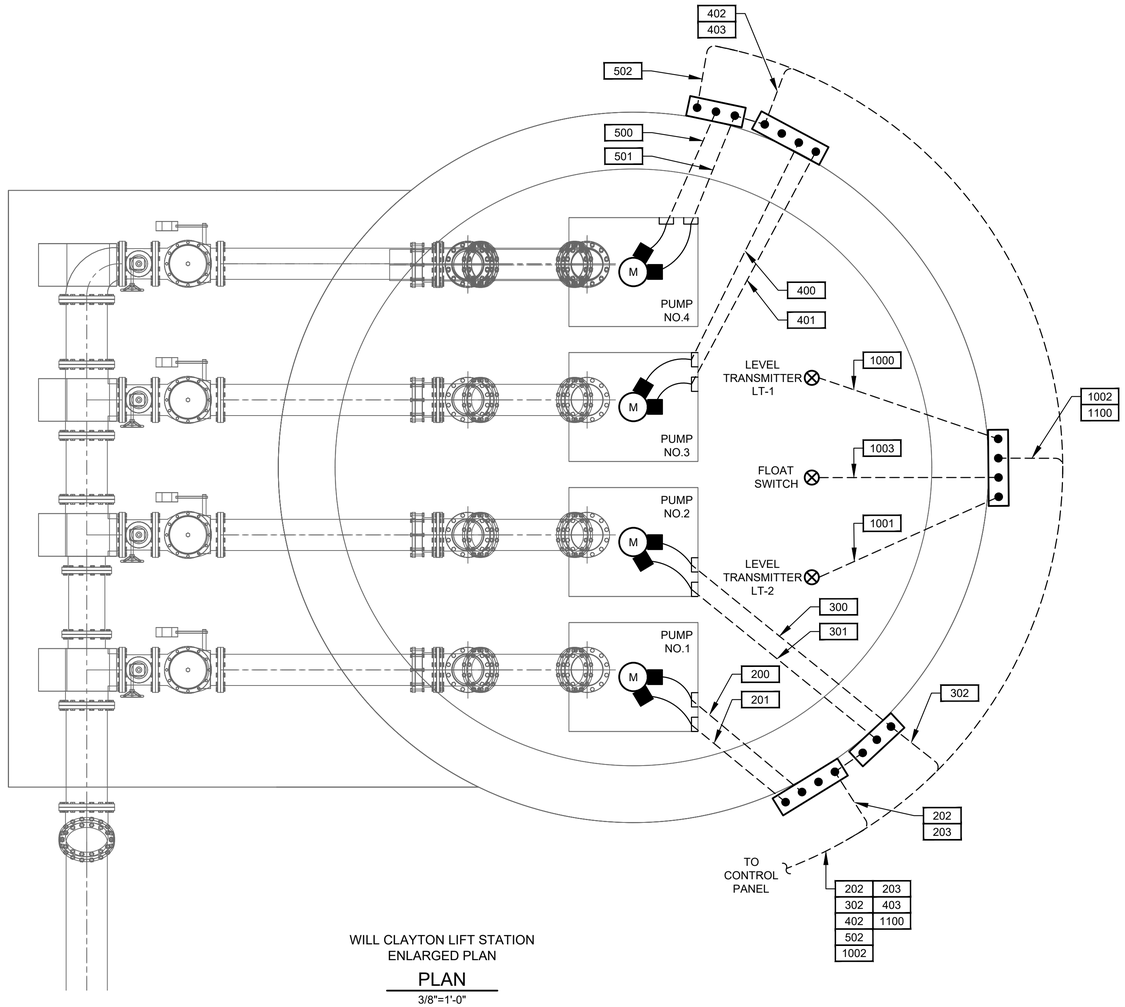

202	203
302	403
402	1100
502	
1002	

WILL CLAYTON LIFT STATION
ENLARGED PLAN

PLAN

3/8"=1'-0"

NO.	DATE	REVISION	APP.
	MM/DD/YY	BRIEF DESCRIPTION	XXX
	MM/DD/YY	BRIEF DESCRIPTION	XXX
	MM/DD/YY	BRIEF DESCRIPTION	XXX

RPS A TETRA TECH COMPANY
Texas PE Firm Reg. #F-929
575 N. Dairy Ashford, Suite 700,
Houston, Texas 77079
T +1 281 589 7257
E usinfrastructure@rpsgroup.com

FOR INTERIM REVIEW ONLY NOT INTENDED FOR PERMIT, BIDDING OR CONSTRUCTION PURPOSES.
ENGINEER:
HOSS FOROUZAN
P.E. SERIAL NO.77748
03/30/2026

SURVEYED BY:
FB NO. F-4578

CITY OF HOUSTON
HOUSTON PUBLIC WORKS

RECONSTRUCTION & REHABILITATION
COH LIFT STATIONS

WILL CLAYTON LIFT STATION ENLARGED ELECTRICAL LIFT STATION PLAN

WBS NUMBER	FOR CITY OF HOUSTON USE ONLY
R-000267-00178-3	
DRAWING SCALE	
AS NOTED	
CITY OF HOUSTON PM	
TAHA LOTIA	
SHEET NO. 211 OF 268	

WC-E-5

FILE PATH: O:\H8109_Lift Station Rehabilitation And Reconstruction (Tetratech)\6 Drawings\Electrical\Working\Will Clayton\Will Clayton_E-05.dwg PLOT STYLE: GAI.ctb
PLOTTED: 3/30/2026 4:07 PM

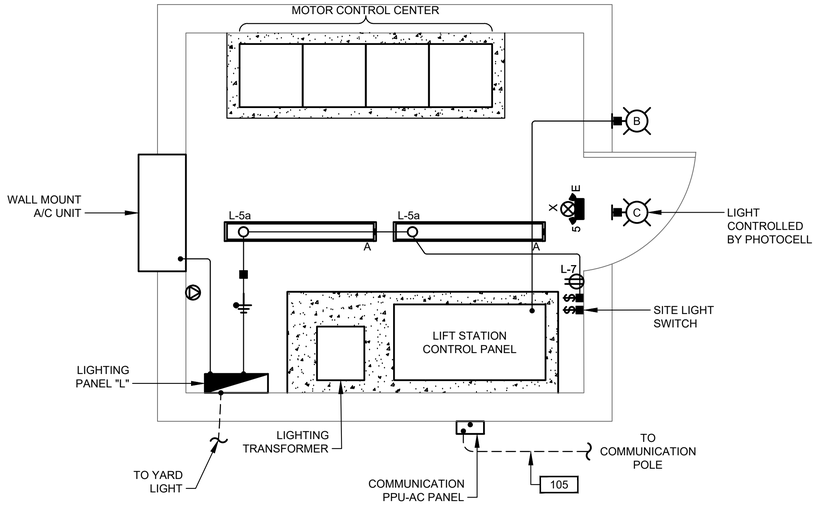

LIGHTING & COMMUNICATION SYSTEM PLAN

1/2"=1'-0"

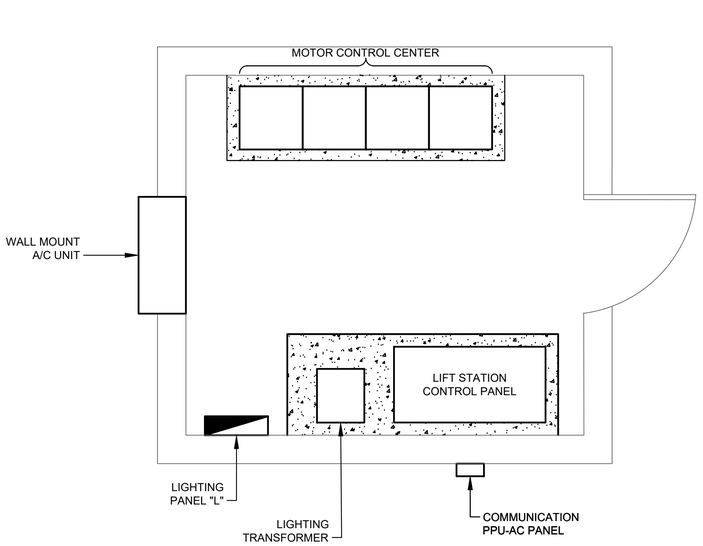

POWER PLAN

1/2"=1'-0"

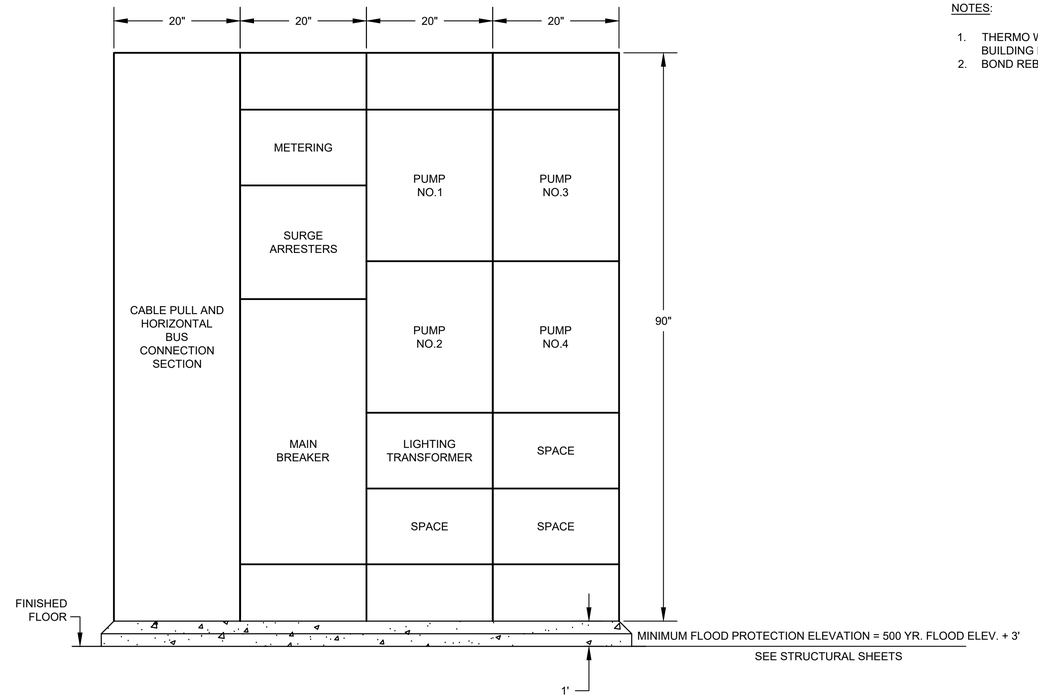

MCC ELEVATION

DETAIL 1 / -

NTS.

NOTES:

1. THERMO WELD BUILDING GROUND CONDUCTOR TO BUILDING REINFORCING STEEL.
2. BOND REBAR IN CONCRETE FOOTER TO GROUND ROD.

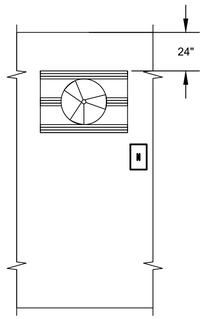

EXHAUST FAN

NTS.

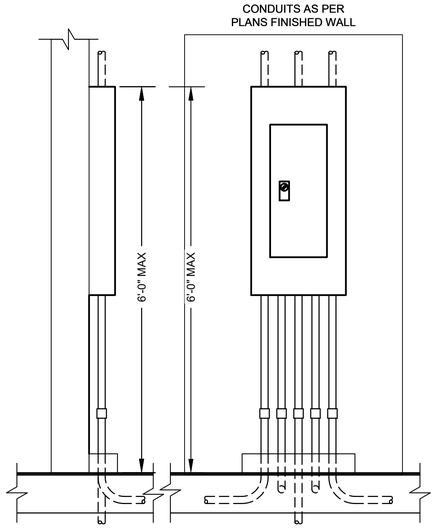

SIDE ELEVATION FRONT ELEVATION

TYPICAL PANEL INSTALLATION

DETAIL - / -

NTS.

NO.	DATE	REVISION	APP.
	MM/DD/YY	BRIEF DESCRIPTION	XXX
	MM/DD/YY	BRIEF DESCRIPTION	XXX
	MM/DD/YY	BRIEF DESCRIPTION	XXX

RPS
A TETRA TECH COMPANY
Texas PE Firm Reg. #F-929
575 N. Dairy Ashford, Suite 700,
Houston, Texas 77079
T +1 281 589 7257
E usinfrastructure@rpsgroup.com

SURVEYED BY:
FB NO. F-4578

FOR INTERIM REVIEW ONLY NOT INTENDED FOR PERMIT, BIDDING OR CONSTRUCTION PURPOSES.
ENGINEER:
HOSS FOROUZAN
P.E. SERIAL NO.77748
03/30/2026

CITY OF HOUSTON
HOUSTON PUBLIC WORKS

RECONSTRUCTION & REHABILITATION
COH LIFT STATIONS

WILL CLAYTON LIFT STATION PROPOSED CONTROL BUILDING PLAN & MCC ELEVATION

WBS NUMBER	FOR CITY OF HOUSTON USE ONLY
R-000267-00178-3	
DRAWING SCALE	
AS NOTED	
CITY OF HOUSTON PM	
TAHA LOTIA	
SHEET NO. 212 OF 268	

WC-E-6

FILE PATH: O:\H8109_Lift Station Rehabilitation And Reconstruction (Tetratech)\6 Drawings\Electrical\Working\Will Clayton\Will Clayton_E-06.dwg PLOT STYLE: COH.ctb PLOTTED: 3/30/2026 6:16 PM

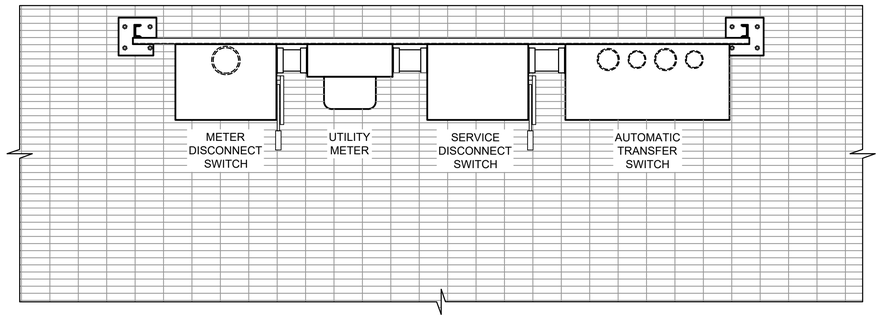

PLAN VIEW

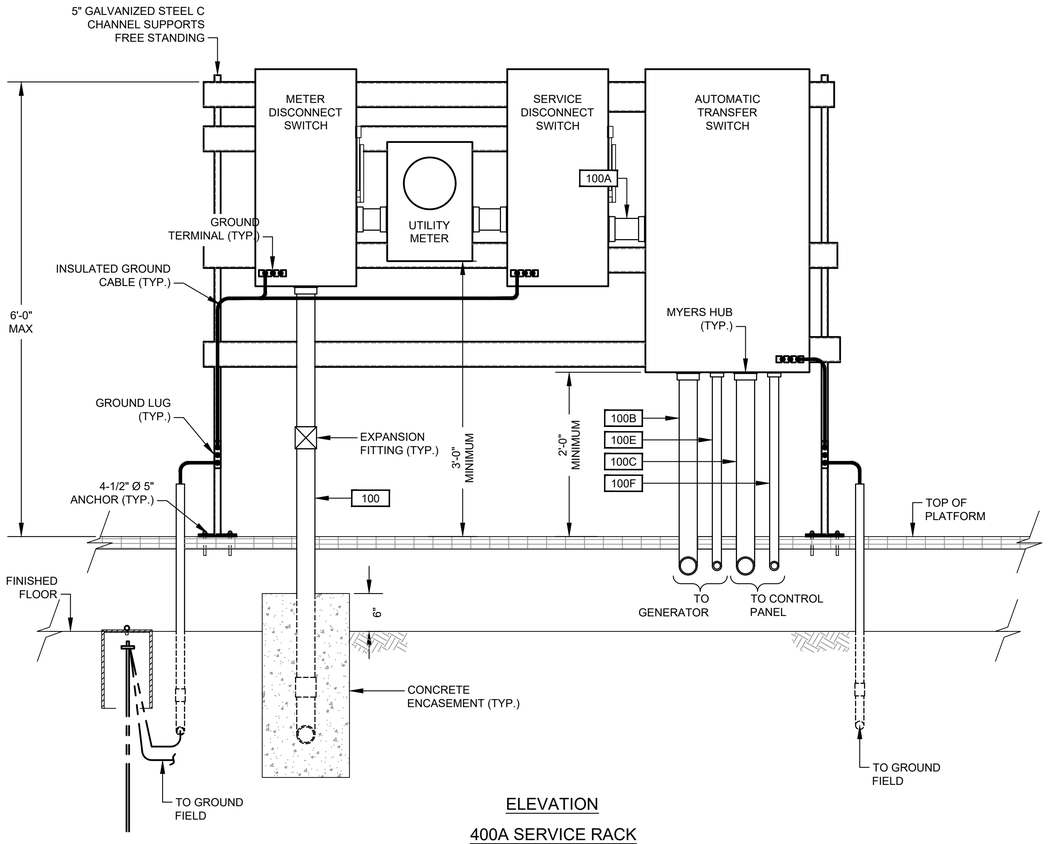

ELEVATION

400A SERVICE RACK

NO.	DATE	REVISION	APP.
	MM/DD/YY	BRIEF DESCRIPTION	XXX
	MM/DD/YY	BRIEF DESCRIPTION	XXX
	MM/DD/YY	BRIEF DESCRIPTION	XXX

RPS A TETRA TECH COMPANY
Texas PE Firm Reg. #F-929
575 N. Dairy Ashford, Suite 700,
Houston, Texas 77079
T +1 281 589 7257
E usinfrastructure@rpsgroup.com

SURVEYED BY:
FB NO. F-4578

FOR INTERIM REVIEW ONLY NOT INTENDED FOR PERMIT, BIDDING OR CONSTRUCTION PURPOSES.
ENGINEER:
HOSS FOROUZAN
P.E. SERIAL NO.77748
03/30/2026

CITY OF HOUSTON
HOUSTON PUBLIC WORKS

RECONSTRUCTION & REHABILITATION
COH LIFT STATIONS

WILL CLAYTON LIFT STATION ELECTRICAL SERVICE RACK DETAIL

WBS NUMBER	FOR CITY OF HOUSTON USE ONLY
R-000267-00178-3	
DRAWING SCALE	
AS NOTED	
CITY OF HOUSTON PM	
TAHA LOTIA	
SHEET NO. 213 OF 268	

WC-E-7

FILE PATH: O:\H8109_Lift Station Rehabilitation And Reconstruction (Tetratech)\6 Drawings\Electrical\Working\Will Clayton\Will Clayton_E-07.dwg PLOT STYLE: GAI.ctb PLOTTED: 3/30/2026 4:07 PM

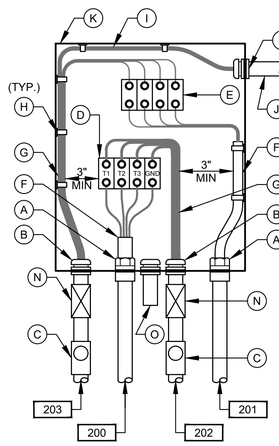

PUMP NO.1
JUNCTION BOX

DETAIL 2
NTS
(SEE NOTE 7)

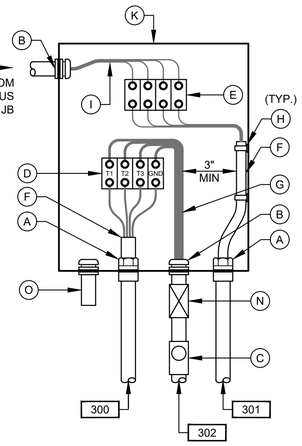

PUMP NO.2
JUNCTION BOX

DETAIL 3
NTS
(SEE NOTE 7)

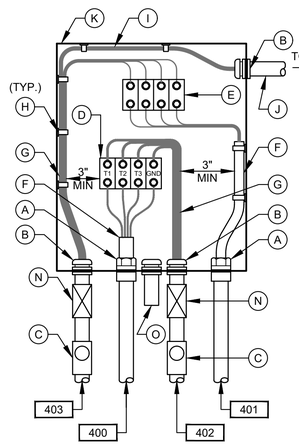

PUMP NO.3
JUNCTION BOX

DETAIL 4
NTS
(SEE NOTE 7)

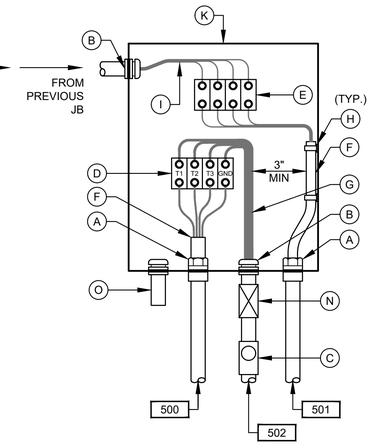

PUMP NO.4
JUNCTION BOX

DETAIL 5
NTS
(SEE NOTE 7)

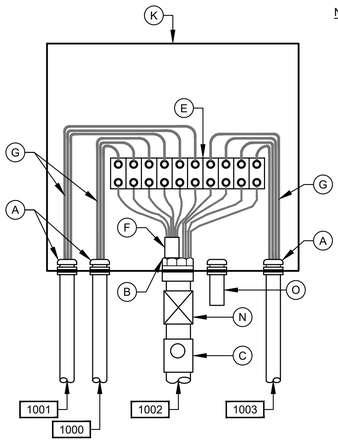

LEVEL TRANSMITTER
JUNCTION BOX

DETAIL 6
NTS
(SEE NOTE 7)

NOTES:

1. NAMEPLATES SHALL BE MOUNTED TO JUNCTION BOXES USING 316 STAINLESS STEEL HARDWARE.
2. MAINTAIN MINIMUM SEPARATION REQUIRED UNDER NEC ARTICLE 504, BETWEEN INTRINSICALLY SAFE CONTROL WIRING AND NON INTRINSICALLY SAFE MOTOR FEEDER WIRING.
3. UNLESS OTHERWISE NOTED, ALL EXTERIOR EXPOSED CONDUITS SHALL BE PVC COATED ALUMINUM.
4. UNLESS OTHERWISE NOTED, ALL NUTS, BOLTS, SCREWS WASHERS, ETC SHALL BE TYPE 316 STAINLESS STEEL.
5. ALL UNDERGROUND CONDUITS TO BE ENCASED IN REINFORCED CONCRETE DUCTBANK.
6. PROVIDE ANTI-CORROSIVE SPRAY ON ANY BARE METAL PARTS OR EXPOSED WIRE.
7. SEE WIRING SCHEMATICS FOR TERMINALS AND WIRE NUMBERS.
8. ANY CONDUIT REQUIRING A CSBE SEAL, SHALL BE A MINIMUM SIZE OF 2 1/2" PER CABLE.
9. DETAIL SHOWN MAY BE MODIFIED PER SITE SITUATION.
10. COORDINATE WITH WASTE WATER OPERATIONS ELECTRICAL ORGANIZATION FOR THE OPENING OF JUNCTION BOXES TO THE SIDE OF WET WELL IF REQUIRED DURING CONSTRUCTION.
11. THE ENCLOSURES WITH ELECTRICAL CIRCUITS SHALL BE A MINIMUM OF 5 FEET FROM ANY CLASSIFIED AREA, OTHERWISE EXPLOSION PROOF TYPE ENCLOSURES SHALL BE USED.
12. THE RECEPTACLES SHALL BE EXPLOSION PROOF TYPE IF INSTALLED WITHIN 5 FEET OF CLASSIFIED AREA, SHALL BE FIELD VERIFIED.

JUNCTION BOX EQUIPMENT SCHEDULE

- A - OZ GEDNEY CSBE SEAL
- B - WATERTIGHT CONDUIT HUB WITH INSULATED BUSHING
- C - CLASS I, DIV 1, EXPLOSION PROOF SEAL INSTALLED PER NEC DIV 501
- D - POWER TERMINAL BLOCK W/SCREW DOWN BOX LUGS
- E - CONTROL TERM BLOCK W/SCREW DOWN BOX LUGS
- F - MULTI-CONDUCTOR CABLE, REMOVE OUTER JACKET AS SHOWN
- G - WIRING AS SCHEDULED
- H - WIRING HARNESS PERMANENTLY AFFIXED
- I - PUMP CONTROL WIRING FROM PUMPS 2; 2 & 3; 4; OR D2, AS APPLICABLE
- J - 1 1/2" PVC COATED CONDUIT NIPPLE
- K - NEMA 4X STAINLESS STEEL JUNCTION BOX WITH GASKETED FRONT COVER, SINGLE QUARTER TURN, OIL-TIGHT LATCH AND PADLOCKING PROVISIONS, HOFFMAN D-3L16H1206 SS LF OR EQUAL. MINIMUM SIZE: 12"W X 16"H X 6"D
- L - NAMEPLATE, SEE SPECIFICATIONES (SEE NAMEPLATE SCHEDULE)
- M - MOTOR RATED SWITCH
- N - EXPANSION FITTING
- O - DRAIN VENT

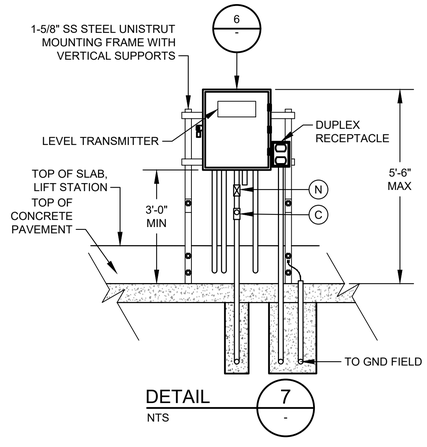

DETAIL 7
NTS

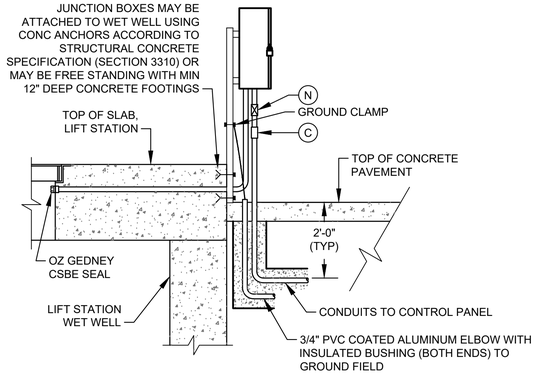

TYP SIDE VIEW FOR DETAIL 1

(SEE NOTE 10)

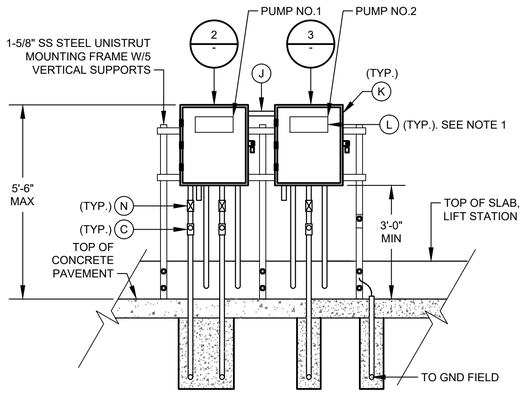

DETAIL 1
NTS

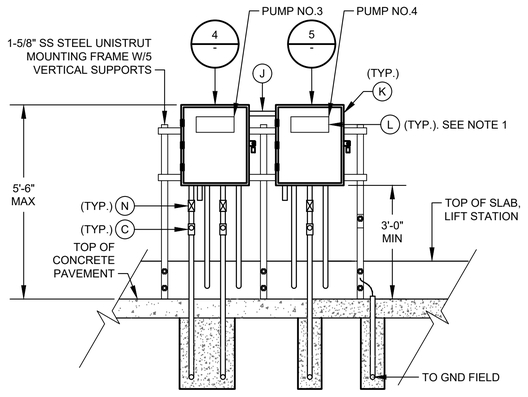

DETAIL 1A
NTS

NO.	DATE	REVISION	APP.
	MM/DD/YY	BRIEF DESCRIPTION	XXX
	MM/DD/YY	BRIEF DESCRIPTION	XXX
	MM/DD/YY	BRIEF DESCRIPTION	XXX

RPS A TETRA TECH COMPANY
Texas PE Firm Reg. #F-929
575 N. Dairy Ashford, Suite 700, Houston, Texas 77079
T +1 281 589 7257
E usinfrastructure@rpsgroup.com

SURVEYED BY:
FB NO. F-4578

FOR INTERIM REVIEW ONLY NOT INTENDED FOR PERMIT, BIDDING OR CONSTRUCTION PURPOSES.
ENGINEER:
HOSS FOROUZAN
P.E. SERIAL NO.77748
03/30/2026

CITY OF HOUSTON
HOUSTON PUBLIC WORKS

RECONSTRUCTION & REHABILITATION
COH LIFT STATIONS

WILL CLAYTON LIFT STATION ELECTRICAL JUNCTION BOX DETAILS

WBS NUMBER	FOR CITY OF HOUSTON USE ONLY
R-000267-00178-3	
DRAWING SCALE	
AS NOTED	
CITY OF HOUSTON PM	
TAHA LOTIA	
SHEET NO. 214 OF 268	

WC-E-8

PLOTTED: 3/30/2026 4:07 PM
FILE PATH: O:\H8109_Lift Station Rehabilitation And Reconstruction (Tetratech)\6 Drawings\Electrical\Working\Will Clayton\Will Clayton_E-08.dwg PLOT STYLE: GAI.ctb

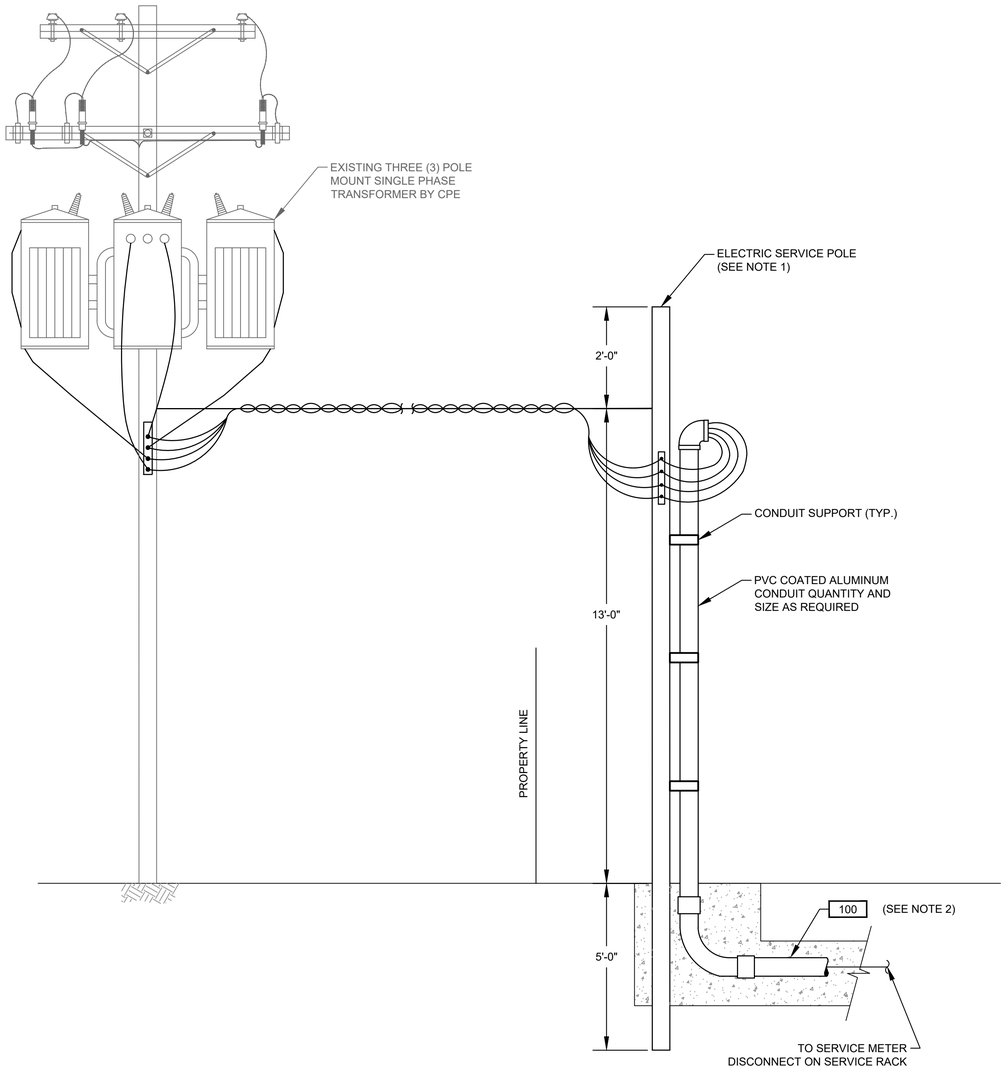

TYPICAL ELECTRICAL SERVICE ENTRANCE

FOR POWER SUPPLY BELOW 500KVA

DETAIL 1 / NTS. -

NOTES:

1. WOODEN POLE 20' LONG. TOP DIAMETER 6", BOTTOM DIAMETER 8" PROVIDED AND INSTALLED BY ELECTRICAL CONTRACTOR.
2. ELECTRICAL SERVICE FEEDER PROVIDED AND INSTALLED BY ELECTRICAL CONTRACTOR. COORDINATE WITH CPE FOR THE REQUIREMENTS OF THE INSTALLATION.

NO.	DATE	REVISION		APP.
	MM/DD/YY	BRIEF	DESCRIPTION	XXX
	MM/DD/YY	BRIEF	DESCRIPTION	XXX
	MM/DD/YY	BRIEF	DESCRIPTION	XXX

RPS A TETRA TECH COMPANY
Texas PE Firm Reg. #F-929
575 N. Dairy Ashford, Suite 700,
Houston, Texas 77079
T +1 281 589 7257
E usinfrastructure@rpsgroup.com

FOR INTERIM REVIEW ONLY NOT INTENDED FOR PERMIT, BIDDING OR CONSTRUCTION PURPOSES.
ENGINEER:
HOSS FOROUZAN
P.E. SERIAL NO.77748
03/30/2026

SURVEYED BY:
FB NO. F-4578

CITY OF HOUSTON
HOUSTON PUBLIC WORKS

RECONSTRUCTION & REHABILITATION
COH LIFT STATIONS

WILL CLAYTON LIFT STATION ELECTRICAL SERVICE POLE DETAIL

WBS NUMBER	FOR CITY OF HOUSTON USE ONLY
R-000267-00178-3	
DRAWING SCALE	
AS NOTED	
CITY OF HOUSTON PM	
TAHA LOTIA	
SHEET NO. 215 OF 268	

WC-E-9

FILE PATH: O:\H8109_Lift Station Rehabilitation And Reconstruction (Tetratech)\6 Drawings\Electrical\Working\Will Clayton\Will Clayton_E-09.dwg PLOT STYLE: GAI.ctb PLOTTED: 3/30/2026 4:07 PM

	DESCRIPTION	SERVICE		ROUTING			CONDUIT & WIRE SIZE
		VOLTAGE	AMPS OR HP	FROM	TO	VIA	
A	MAIN BONDING JUMPER	--	--	MAIN FUSED DISCONNECT NEUTRAL	MAIN FUSED DISCONNECT GROUND	--	#1/0 CU GND.
B	EQUIPMENT BONDING JUMPER	--	--	MCC/POWER PANEL ENCLOSURE	POWER/CONTROL PANEL & EQUIPMENT	--	#1/0 CU GND.
C	GROUNDED ELECTRODE CONDUCTOR	--	--	GROUNDING ELECTRODE	MAIN SERVICE FUSED DISCONNECT GROUNDING	--	#1/0 CU GND.
100	SERVICE ENTRANCE	480V	400A	UTILITY POWER SERVICE	METER DISCONNECT		3#500MCM, 1/0 NEUT. #2 GND. 4"C.
100A	SERVICE POWER	480V	400A	SERVICE DISCONNECT SWITCH	ATS	--	3#500MCM, 1/0 NEUT. #2 GND. 4"C.
100B	EMERGENCY POWER	480V	400A	GENERATOR	ATS	--	3#500MCM, 1/0 NEUT. #2 GND. 4"C.
100C	ELECTRICAL POWER	480V	400A	ATS	MCC	--	3#500MCM, 1/0 NEUT. #2 GND. 4"C.
100D	GENERATOR AUX. POWER	120/240V	50A	GENERATOR	LIGHTING PANEL	--	3#4 AWG, #8 GND. 1-1/2"C.
100E	GENERATOR CONTROLS	24VDC	--	GENERATOR	ATS	--	6#14 AWG, #14 GND. 3/4"C.
100F	NORMAL/GENERATOR POWER STATUS	24VDC	--	ATS	CONTROL PANEL	--	4#14 AWG, #14 GND. 3/4"C.
100G	GENERATOR ALARM SIGNALS	24VDC	--	GENERATOR	CONTROL PANEL	--	16#14 AWG, #14 GND. 1"C.
101	GROUND ELECTRODE CONDUCTOR	--	--	CONTROL PANEL	GROUND FIELD	--	#1/0 CU GND.
105	COMMUNICATION	--	--	COMMUNICATION POLE	CONTROL PANEL	--	1-1/2"C. CAT 5E
200	PUMP NO. 1 POWER	480V	40 HP	PUMP NO.1	PUMP NO.1 JUNCTION BOX	--	MANUFACTURER'S CABLE IN 2-1/2" CONDUIT
201	PUMP NO. 1 CONTROLS	120V	--	PUMP NO.1	PUMP NO.1 JUNCTION BOX	--	MANUFACTURER'S CABLE IN 2-1/2" CONDUIT
202	PUMP NO. 1 POWER	480V	40 HP	PUMP NO. 1 JUNCTION BOX	PUMP STARTER	--	3#6 AWG, #10 GND. 1"C.
203	COMBINED PUMP CONTROLS	120V	--	PUMP NO.1 JUNCTION BOX	PUMP NO.1 JUNCTION BOX	COMBINED PUMP 1 & 2 CONTROLS	COMBINE 200 & 300 TAG WIRING, 8#14, 1"C.
300	PUMP NO. 2 POWER	480V	40 HP	PUMP NO.2	PUMP NO.2 JUNCTION BOX	--	MANUFACTURER'S CABLE IN 2-1/2" CONDUIT
301	PUMP NO. 2 CONTROLS	120V	--	PUMP NO.2	PUMP NO.2 JUNCTION BOX	--	MANUFACTURER'S CABLE IN 2-1/2" CONDUIT
302	PUMP NO. 2 POWER	480V	40 HP	PUMP NO. 2 JUNCTION BOX	PUMP STARTER	--	3#6 AWG, #10 GND. 1"C.
400	PUMP NO. 3 POWER	480V	40 HP	PUMP NO.3	PUMP NO.3 JUNCTION BOX	--	MANUFACTURER'S CABLE IN 2-1/2" CONDUIT
401	PUMP NO. 3 CONTROLS	120V	--	PUMP NO.3	PUMP NO.3 JUNCTION BOX	--	MANUFACTURER'S CABLE IN 2-1/2" CONDUIT
402	PUMP NO. 3 POWER	480V	40 HP	PUMP NO. 3 JUNCTION BOX	PUMP STARTER	--	3#6 AWG, #10 GND. 1"C.
403	COMBINED PUMP CONTROLS	120V	--	PUMP NO.3 JUNCTION BOX	PUMP NO.3 JUNCTION BOX	COMBINED PUMP 3 & 4 CONTROLS	COMBINE 400 & 500 TAG WIRING, 8#14, 1"C.
500	PUMP NO. 4 POWER	480V	40 HP	PUMP NO.4	PUMP NO.4 JUNCTION BOX	--	MANUFACTURER'S CABLE IN 2-1/2" CONDUIT
501	PUMP NO. 4 CONTROLS	120V	--	PUMP NO.4	PUMP NO.4 JUNCTION BOX	--	MANUFACTURER'S CABLE IN 2-1/2" CONDUIT
502	PUMP NO.4 POWER	480V	40 HP	PUMP NO. 4 JUNCTION BOX	PUMP STARTER	--	3#6 AWG, #10 GND. 1"C.
600	LIGHTING TRANSFORMER PRIMARY FEEDER	480V	70A	CONTROL PANEL	LIGHTING TRANSFORMER PRIMARY	--	2#4 AWG, #8 GND. 1"C.
601	LIGHTING PANEL GROUND	--	--	LIGHTING PANEL	GROUND FIELD	--	#8 GND., 1"C.
602	LIGHTING PANEL FEEDER	120/240V	--	LIGHTING TRANSFORMER	LIGHTING PANEL	--	3#1 AWG, #6 GND. 1-1/2"C.
900	INTRUSION ALARM	24VDC	--	MOTION SWITCH	CONTROL PANEL	--	2#14, 3/4"C.
1000	LEVEL TRANSMITTER	24VDC	--	TRANSMITTER JUNCTION BOX	TRANSMITTER JUNCTION BOX	--	MANUFACTURER'S CABLE IN 2-1/2" CONDUIT
1001	LEVEL TRANSMITTER	24VDC	--	TRANSMITTER JUNCTION BOX	TRANSMITTER JUNCTION BOX	--	MANUFACTURER'S CABLE IN 2-1/2" CONDUIT
1002	COMBINED LEVEL TRANSMITTERS & FLOAT SWITCH	24VDC	--	CONTROL PANEL	TRANSMITTER JUNCTION BOX	--	2-TRI, 4#14, 2"C.
1003	WELL FLOAT SWITCHES	24VDC	--	TRANSMITTER JUNCTION BOX	FLOAT SWITCH NO.1 & NO.2	--	MANUFACTURER'S CABLE IN 2-1/2" CONDUIT
1100	120VAC FOR RECEPTACLE	--	--	LIGHTING PANEL	RECEPTACLE NEXT TO TRANSMITTER J-BOX	--	2#12, #12G, 1"C.
1200	120VAC FOR RECEPTACLE	--	--	LIGHTING PANEL	RECEPTACLE ON GENERATOR PLATFORM	--	4#12, #12G, 1"C.
1300	SITE LIGHTING	120VAC	--	LIGHTING PANEL	LIGHT SWITCH	--	2#12, #12G, 1"C.
1300A	SITE LIGHTING	120VAC	--	LIGHTING SWITCH	SITE LIGHTS	--	2#12, #12G, 1"C.

NOTES BY SYMBOL "⟨#⟩":

⟨1⟩ REFER TO SPEC SECTION 16120 FOR CONDUCTOR COLOR CODE.

NO.	DATE	REVISION	APP.
	MM/DD/YY	BRIEF DESCRIPTION	XXX
	MM/DD/YY	BRIEF DESCRIPTION	XXX
	MM/DD/YY	BRIEF DESCRIPTION	XXX

RPS A TETRA TECH COMPANY
Texas PE Firm Reg. #F-929
575 N. Dairy Ashford, Suite 700,
Houston, Texas 77079
T +1 281 589 7257
E usinfrastructure@rpsgroup.com

SURVEYED BY:
FB NO. F-4578

FOR INTERIM REVIEW ONLY NOT INTENDED FOR PERMIT, BIDDING OR CONSTRUCTION PURPOSES.
ENGINEER:
HOSS FOROUZAN
P.E. SERIAL NO.77748
03/30/2026

CITY OF HOUSTON
HOUSTON PUBLIC WORKS

RECONSTRUCTION & REHABILITATION
COH LIFT STATIONS

WILL CLAYTON LIFT STATION ELECTRICAL CONDUIT SCHEDULE

WBS NUMBER	FOR CITY OF HOUSTON USE ONLY
R-000267-00178-3	
DRAWING SCALE	
AS NOTED	
CITY OF HOUSTON PM	
TAHA LOTIA	
SHEET NO. 216 OF 268	

WC-E-10

FILE PATH: O:\H8109_Lift Station Rehabilitation And Reconstruction (Tetratech)\6 Drawings\Electrical\Working\Will Clayton\Will Clayton_E-10.dwg PLOT STYLE: GAI.ctb PLOTTED: 3/30/2026 4:07 PM

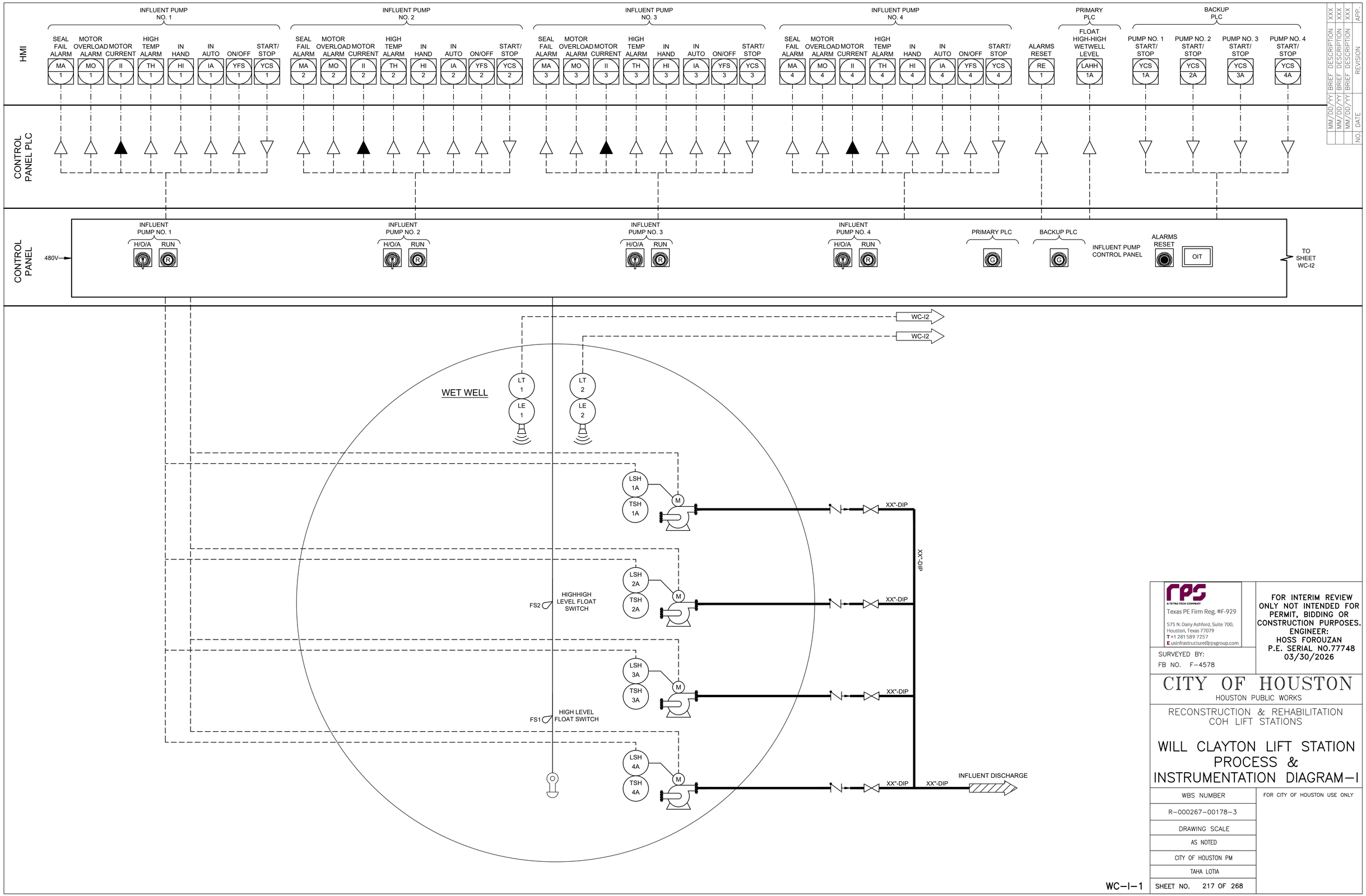

NO.	DATE	REVISION	APP.
	MM/DD/YY	BRIEF DESCRIPTION	XXX
	MM/DD/YY	BRIEF DESCRIPTION	XXX
	MM/DD/YY	BRIEF DESCRIPTION	XXX

rps
A TETRA TECH COMPANY
Texas PE Firm Reg. #F-929
575 N. Dairy Ashford, Suite 700, Houston, Texas 77079
T +1 281 589 7257
E usinfrastructure@rpsgroup.com

FOR INTERIM REVIEW ONLY NOT INTENDED FOR PERMIT, BIDDING OR CONSTRUCTION PURPOSES.
ENGINEER:
HOSS FOROUZAN
P.E. SERIAL NO.77748
03/30/2026

SURVEYED BY:
FB NO. F-4578

CITY OF HOUSTON
HOUSTON PUBLIC WORKS

RECONSTRUCTION & REHABILITATION
COH LIFT STATIONS

WILL CLAYTON LIFT STATION PROCESS & INSTRUMENTATION DIAGRAM-I

WBS NUMBER	FOR CITY OF HOUSTON USE ONLY
R-000267-00178-3	
DRAWING SCALE	
AS NOTED	
CITY OF HOUSTON PM	
TAHA LOTIA	
SHEET NO. 217 OF 268	

WC-I-1

PLOTTED: 3/26/2026 6:10 PM

FILE PATH: O:\H8109_Lift Station Rehabilitation And Reconstruction (Tetratech)\6 Drawings\Instrumentation And Control\Working\Will Clayton\H8109_WC-I-1.dwg

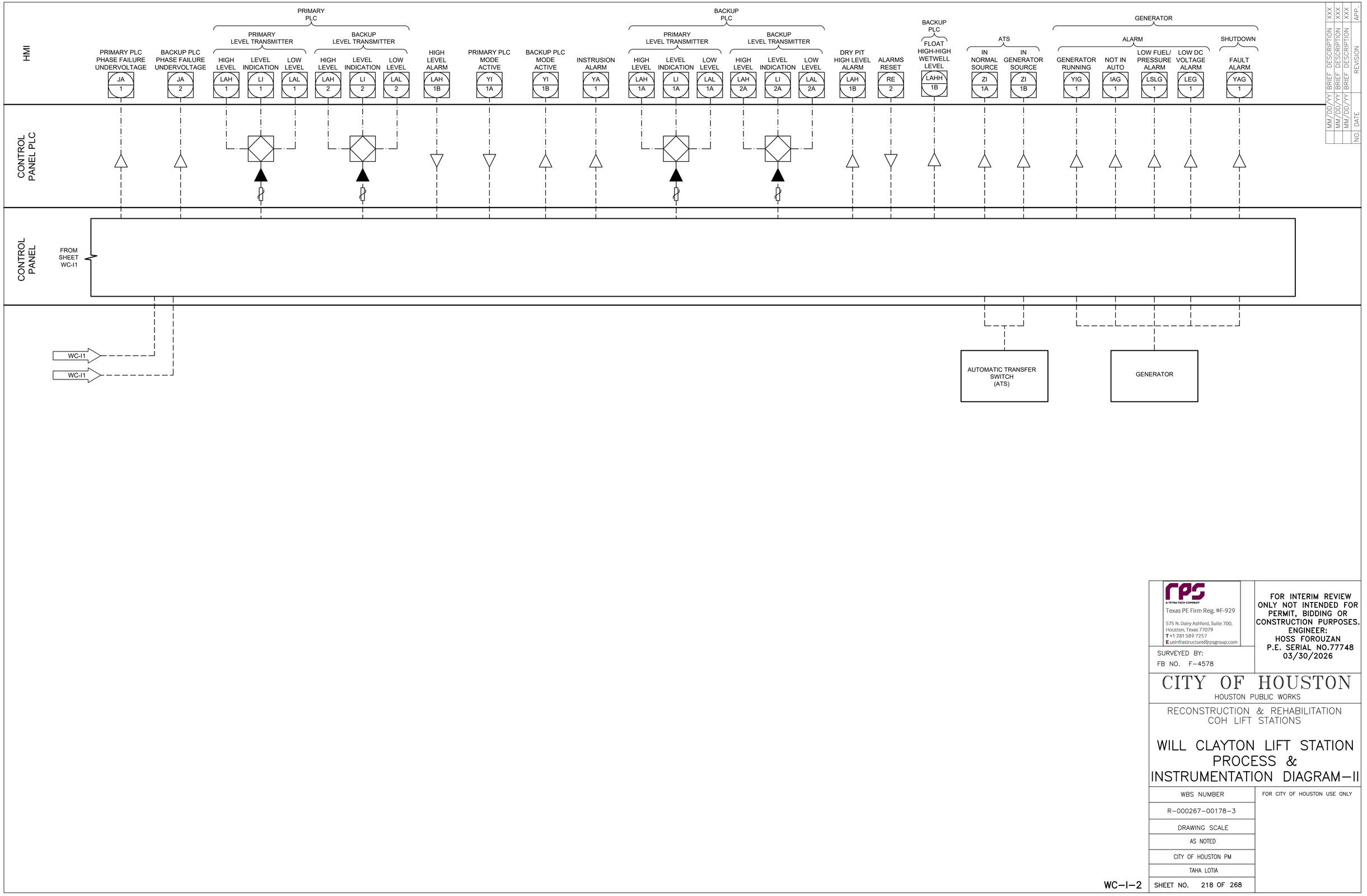

NO.	DATE	REVISION DESCRIPTION	APP.
	MM/DD/YY	BRIEF DESCRIPTION	XXX
	MM/DD/YY	BRIEF DESCRIPTION	XXX
	MM/DD/YY	BRIEF DESCRIPTION	XXX

RPS
A TETRA TECH COMPANY
Texas PE Firm Reg. #F-929
575 N. Dairy Ashford, Suite 700,
Houston, Texas 77079
T +1 281 589 7257
E usinfrastructure@rpsgroup.com

SURVEYED BY:
FB NO. F-4578

FOR INTERIM REVIEW ONLY NOT INTENDED FOR PERMIT, BIDDING OR CONSTRUCTION PURPOSES.
ENGINEER:
HOSS FOROUZAN
P.E. SERIAL NO.77748
03/30/2026

CITY OF HOUSTON
HOUSTON PUBLIC WORKS

RECONSTRUCTION & REHABILITATION
COH LIFT STATIONS

WILL CLAYTON LIFT STATION PROCESS & INSTRUMENTATION DIAGRAM–II

WBS NUMBER	FOR CITY OF HOUSTON USE ONLY
R–000267–00178–3	
DRAWING SCALE	
AS NOTED	
CITY OF HOUSTON PM	
TAHA LOTIA	
SHEET NO. 218 OF 268	

WC–I–2

PLOTTED: 3/26/2026 6:10 PM

FILE PATH: O:\H8109_Lift Station Rehabilitation And Reconstruction (Tetratech)\6 Drawings\Instrumentation And Control\Working\Will Clayton\H8109_WC-I-2.dwg

FILE PATH: O:\H8109_Lift Station Rehabilitation And Reconstruction (Tetratech)\6 Drawings\Instrumentation And Control\Working\Will Clayton\H8109_WC-I-3.dwg
PLOTTED: 3/26/2026 6:10 PM

NO.	DATE	REVISION	APP.
	MM/DD/YY	BRIEF DESCRIPTION	XXX
	MM/DD/YY	BRIEF DESCRIPTION	XXX
	MM/DD/YY	BRIEF DESCRIPTION	XXX

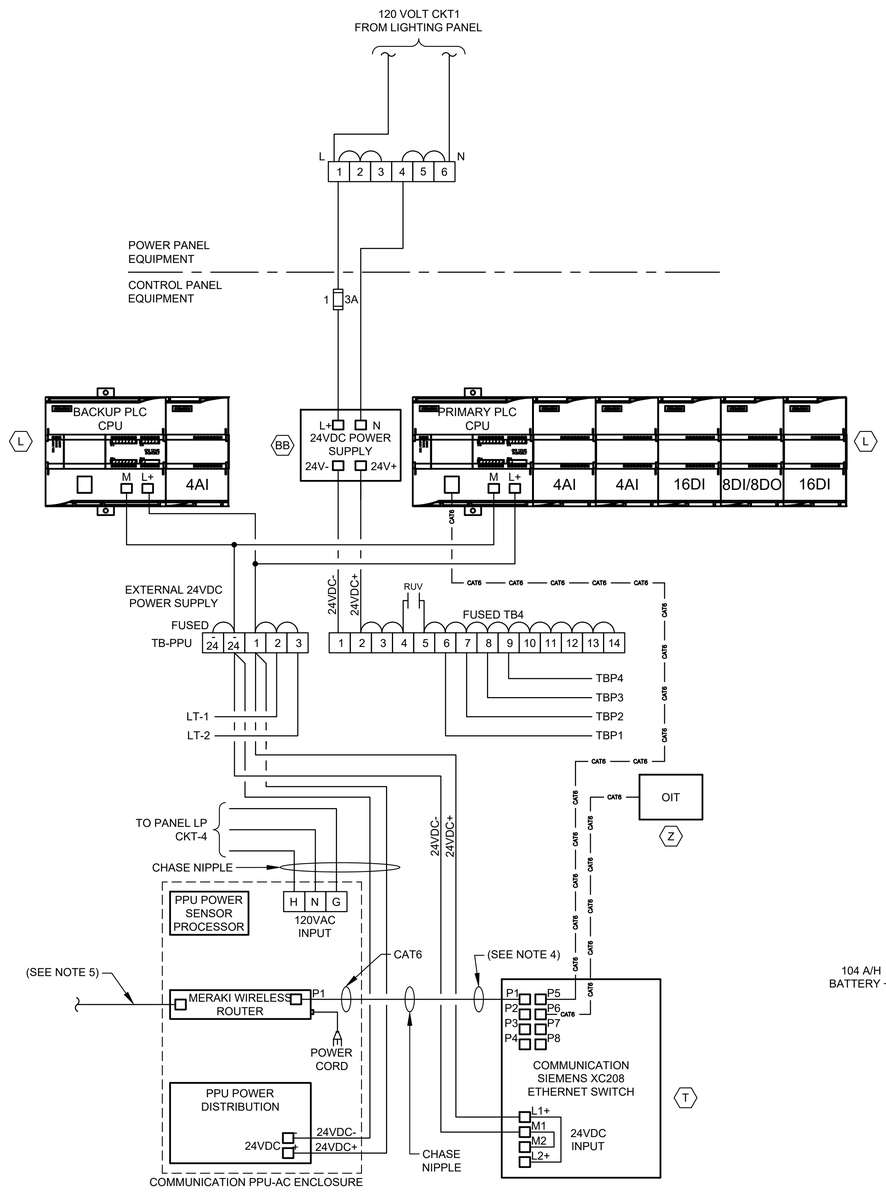

CONTROL POWER &
COMMUNICATIONS WIRING

DIAGRAM

NTS

(SEE NOTE 2 & 6)

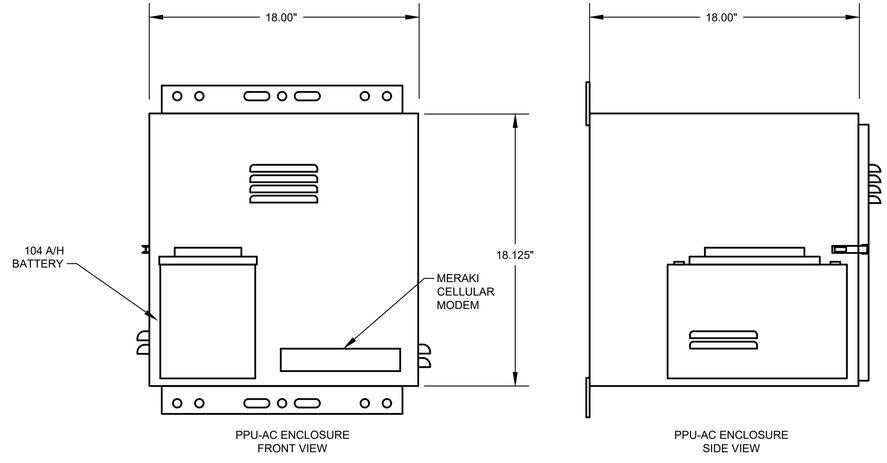

PPU-AC
CONTROL ENCLOSURE

ELEVATION

NTS

(SEE NOTE 6 & 7)

NOTES:

1. FOR DESCRIPTION AND RATINGS OF ITEMS INDICATED WITH ITEM TAG, SEE DEVICE RATINGS SCHEDULE.
2. REFER TO SPEC SECTION 16120 FOR CONDUCTOR COLOR CODE.
3. THE PLC POWER SUPPLY SHALL FEED THE 24VDC I/O.
4. ETHERNET CABLE FOR MERAKI CELLULAR ROUTER (P1)
5. POE CABLE TO RADIO.
6. CAT6 COMMUNICATION PPU-AC & SCADA SHALL BE PROVIDED BY CONTRACTOR INCLUDING TO RUN CONDUITS & WIRES.
7. COORDINATE WITH VENDOR TO PROVIDE PROPER VENTILATION WHERE APPLICABLE.

GENERAL NOTES:

1. NO ELECTRICAL MATERIAL, APPARATUS, DEVICES, APPLIANCES, FIXTURES, OR EQUIPMENT SHALL BE SOLD OR INSTALLED IN THE CITY UNLESS THEY ARE IN CONFORMANCE WITH THE PROVISIONS OF SECTION 508 CITY OF HOUSTON ELECTRICAL CODE, THE LAWS OF THE STATE OF TEXAS AND ANY APPLICABLE RULES AND REGULATIONS ISSUED UNDER THE AUTHORITY OF THE STATE STATUES. THE MAKER'S NAME, TRADEMARK, OR OTHER IDENTIFICATION SYMBOL SHALL BE PLACED ON ALL ELECTRICAL MATERIALS, APPARATUS, DEVICES, APPLIANCES, FIXTURES, AND EQUIPMENT USED OR INSTALLED UNDER THE PROVISIONS OF THIS CODE. ALL ELECTRICAL MATERIALS AND EQUIPMENT SHALL BE LISTED AND LABELED FOR THE INTENDED USE AND SHALL BE INCLUDED IN A LIST PUBLISHED BY AN APPROVAL AGENCY.

RPS A TETRA TECH COMPANY
Texas PE Firm Reg. #F-929
575 N. Dairy Ashford, Suite 700,
Houston, Texas 77079
T +1 281 589 7257
E usinfrastructure@rpsgroup.com

SURVEYED BY:
FB NO. F-4578

FOR INTERIM REVIEW ONLY NOT INTENDED FOR PERMIT, BIDDING OR CONSTRUCTION PURPOSES.
ENGINEER:
HOSS FOROUZAN
P.E. SERIAL NO.77748
03/30/2026

CITY OF HOUSTON
HOUSTON PUBLIC WORKS

RECONSTRUCTION & REHABILITATION
COH LIFT STATIONS

WILL CLAYTON LIFT STATION COMMUNICATION DIAGRAM

WBS NUMBER	FOR CITY OF HOUSTON USE ONLY
R-000267-00178-3	
DRAWING SCALE	
AS NOTED	
CITY OF HOUSTON PM	
TAHA LOTIA	
SHEET NO. 219 OF 268	

WC-I-3

EQUIPMENT AND DEVICE SCHEDULE		
ITEM	QUANTITY	DESCRIPTION
A	1	SINGLE CHANNEL INTRINSICALLY SAFE RELAY
B	2	ANALOG SIGNAL ISOLATOR
C	4	PUMP PROTECTION MODULE
D	*	NOT USED
E	4	HAND-OFF-AUTO SWITCH, 3 POSITION, HEAVY-DUTY OIL TIGHT WITH 2 SETS OF CONTACT BLOCKS (PUMP CONTROL)
F	4	INDICATING LIGHT, HEAVY DUTY, OILTIGHT, RED, 24 VDC, LED, WITH "RUN" LEGEND
G	*	NOT USED.
H	1	SWITCH FOR CABINET LIGHT, 120V, 20A, SPST
I	2	DUPLEX RECEPTACLE, 120V, 20A, 2 WIRE, GROUNDED, GFCI TYPE
J	1	24" LED STRIP LIGHT 120V SUITABLE FOR ZERO DEGREE OPERATION
K	*	NAMEPLATES, SEE SPECIFICATIONS (SEE NAMEPLATE SCHEDULE)
L	2	PROGRAMMABLE LOGIC CONTROLLER WITH EXPANSION UNIT
M	*	CONTROL RELAY 24VDC RELAY WITH THREE FORM C CONTACTS AND 11 PIN SOCKET BASE
N	-	NOT USED
O	-	NOT USED
P	1	NEMA 12 GASKETED STEEL ENCLOSURES WITHOUT VENTS 72" H X 20" D X 60" W
Q	*	TERMINAL BLOCK
R	1	WIRE DUCT 2" WIDE X 2" DEEP MINIMUM
S	1	GROUND BUS
T	1	COMMUNICATION ETHERNET SWITCH
U	9	CARTRIDGE
V	1	PUSHBUTTON, BLACK WITH RESET LEGEND
W	-	NOT USED
X	*	FUSED TERMINAL BLOCKS
Y	1	POWER SURGE PROTECTOR - CONTROL POWER
Z	1	PROGRAMMING SCREEN (OIT)
AA	*	120VAC SYSTEM FUSES
BB	1	120VAC - 24VDC POWER SUPPLY, 5A
CC	*	NOT USED
DD	2	INDICATING LIGHT, HEAVY DUTY, OILTIGHT, GREEN, 24VDC, LED WITH "BACKUP PLC" & "PRIMARY PLC" LEGEND
EE	4	ANALOG I/O SURGE SUPPRESSOR
FF	-	NOT USED

* - AS SCHEDULED

NAMEPLATE SCHEDULE

DESIGNATION	ENGRAVED	DESIGNATION	ENGRAVED
N1	PUMP STATION DESIGNATION	N8	NOT USED.
N2	PUMP NO. 1	N9	NOT USED.
N3	PUMP NO. 2	N10	PROGRAMMING SCREEN
N4	PUMP NO. 3	N11	NOT USED.
N5	PUMP NO. 4	N12	PRIMARY PLC
N6	NOT USED.	N13	BACKUP PLC
N7	NOT USED.	N14	MOTOR DATA

HORSEPOWER (OUTPUT) ----------
RPM AT FULL LOAD ----------
TIME RATING ----------
FREQUENCY ----------
NUMBER OF PHASES ----------
MODEL NUMBER ----------
RATED VOLTAGE ----------
SERVICE FACTOR ----------
FULL LOAD AMPS ----------
INSULATION CLASS ----------
NEMA DESIGN LETTER ----------
TEMPERATURE RISE ----------
NEMA FRAME SIZE ----------
DATE OF MANUFACTURE ----------
THERMO PROTECTION (IF REQUIRED) --
MOISTURE PROTECTION (IF REQUIRED)-

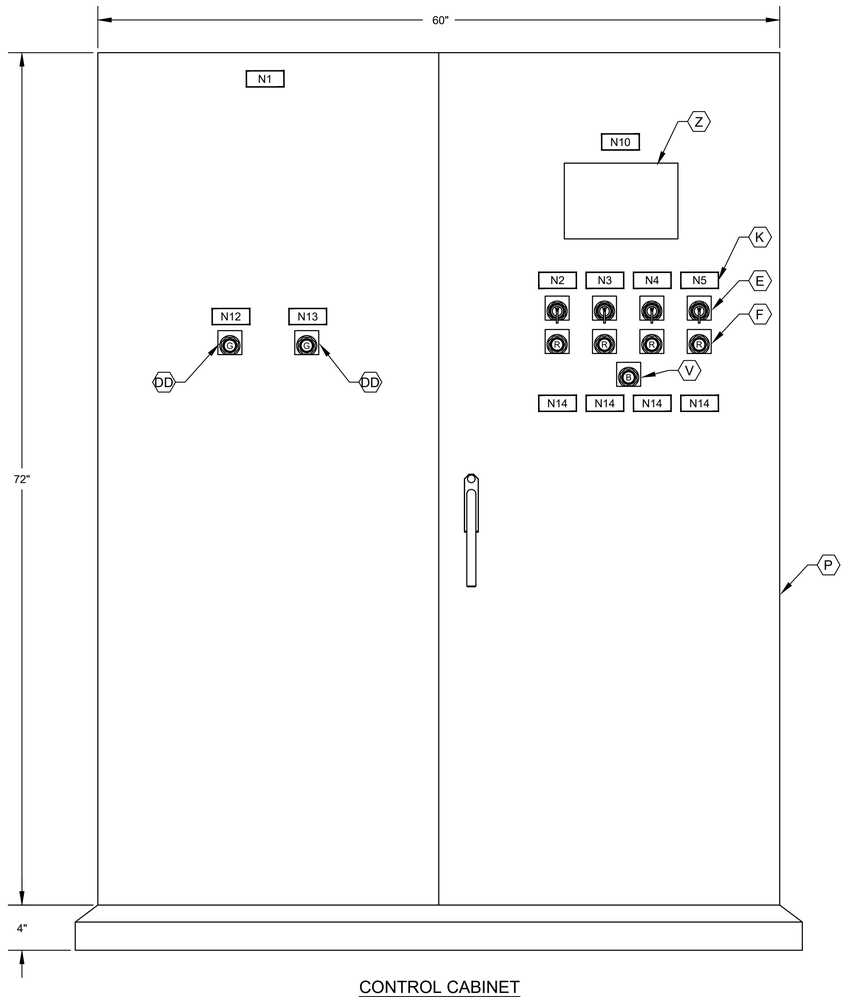

CONTROL CABINET
FRONT DOOR ELEVATION

NOTES:

1. NAMEPLATES SHALL BE MOUNTED TO PANELS USING STAINLESS STEEL HARDWARE.
2. REFER SPECIFICATIONS FOR ALL PANEL COMPONENTS.

GENERAL NOTES:

1. NO ELECTRICAL MATERIAL, APPARATUS, DEVICES, APPLIANCES, FIXTURES, OR EQUIPMENT SHALL BE SOLD OR INSTALLED IN THE CITY UNLESS THEY ARE IN CONFORMANCE WITH THE PROVISIONS OF SECTION 508 CITY OF HOUSTON ELECTRICAL CODE, THE LAWS OF THE STATE OF TEXAS AND ANY APPLICABLE RULES AND REGULATIONS ISSUED UNDER THE AUTHORITY OF THE STATE STATUES. THE MAKER'S NAME, TRADEMARK, OR OTHER IDENTIFICATION SYMBOL SHALL BE PLACED ON ALL ELECTRICAL MATERIALS, APPARATUS, DEVICES, APPLIANCES, FIXTURES, AND EQUIPMENT USED OR INSTALLED UNDER THE PROVISIONS OF THIS CODE. ALL ELECTRICAL MATERIALS AND EQUIPMENT SHALL BE LISTED AND LABELED FOR THE INTENDED USE AND SHALL BE INCLUDED IN A LIST PUBLISHED BY AN APPROVAL AGENCY.

NO.	DATE	REVISION	APP.
	MM/DD/YY	BRIEF DESCRIPTION	XXX
	MM/DD/YY	BRIEF DESCRIPTION	XXX
	MM/DD/YY	BRIEF DESCRIPTION	XXX

RPS A TETRA TECH COMPANY
Texas PE Firm Reg. #F-929
575 N. Dairy Ashford, Suite 700,
Houston, Texas 77079
T +1 281 589 7257
E usinfrastructure@rpsgroup.com

SURVEYED BY:
FB NO. F-4578

FOR INTERIM REVIEW ONLY NOT INTENDED FOR PERMIT, BIDDING OR CONSTRUCTION PURPOSES.
ENGINEER:
HOSS FOROUZAN
P.E. SERIAL NO.77748
03/30/2026

CITY OF HOUSTON
HOUSTON PUBLIC WORKS

RECONSTRUCTION & REHABILITATION
COH LIFT STATIONS

WILL CLAYTON LIFT STATION CONTROL CABINET EQUIP. LAYOUT & SCHEDULE

WBS NUMBER	FOR CITY OF HOUSTON USE ONLY
R-000267-00178-3	
DRAWING SCALE	
AS NOTED	
CITY OF HOUSTON PM	
TAHA LOTIA	
SHEET NO. 220 OF 268	

WC-I-4

PLOTTED: 3/26/2026 6:10 PM
FILE PATH: O:\H8109_Lift Station Rehabilitation And Reconstruction (Tetratech)\6 Drawings\Instrumentation And Control\1Working\Will Clayton\H8109_WC-I-4.dwg

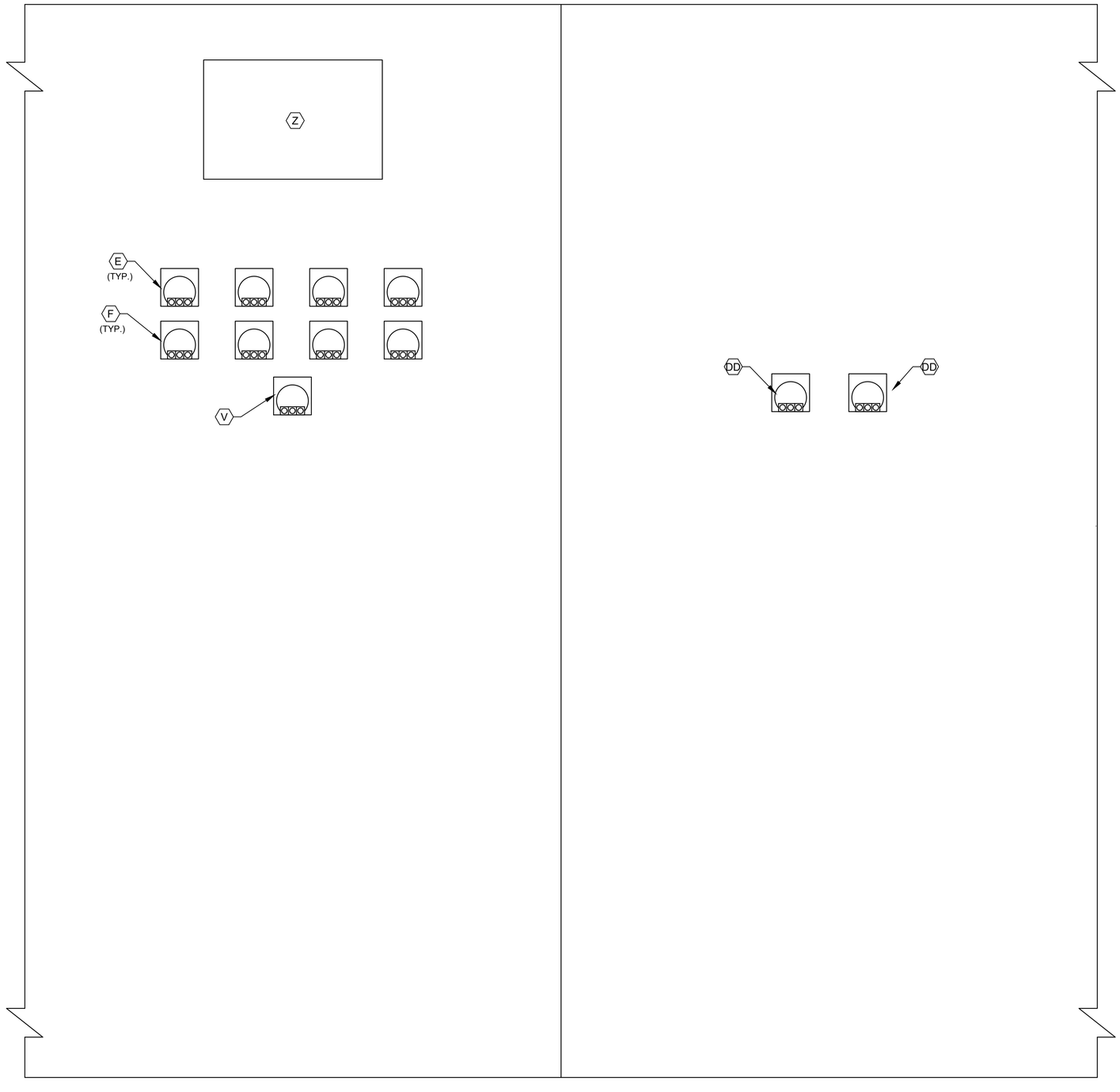

CONTROL CABINET
BACK DOOR ELEVATION

NOTES:

1. SEE SHEET WC-I4 FOR EQUIPMENT SCHEDULE.

GENERAL NOTES:

1. NO ELECTRICAL MATERIAL, APPARATUS, DEVICES, APPLIANCES, FIXTURES, OR EQUIPMENT SHALL BE SOLD OR INSTALLED IN THE CITY UNLESS THEY ARE IN CONFORMANCE WITH THE PROVISIONS OF SECTION 508 CITY OF HOUSTON ELECTRICAL CODE, THE LAWS OF THE STATE OF TEXAS AND ANY APPLICABLE RULES AND REGULATIONS ISSUED UNDER THE AUTHORITY OF THE STATE STATUES. THE MAKER'S NAME, TRADEMARK, OR OTHER IDENTIFICATION SYMBOL SHALL BE PLACED ON ALL ELECTRICAL MATERIALS, APPARATUS, DEVICES, APPLIANCES, FIXTURES, AND EQUIPMENT USED OR INSTALLED UNDER THE PROVISIONS OF THIS CODE. ALL ELECTRICAL MATERIALS AND EQUIPMENT SHALL BE LISTED AND LABELED FOR THE INTENDED USE AND SHALL BE INCLUDED IN A LIST PUBLISHED BY AN APPROVAL AGENCY.

NO.	DATE	REVISION	APP.
	MM/DD/YY	BRIEF DESCRIPTION	XXX
	MM/DD/YY	BRIEF DESCRIPTION	XXX
	MM/DD/YY	BRIEF DESCRIPTION	XXX

RPS
A TETRA TECH COMPANY
Texas PE Firm Reg. #F-929
575 N. Dairy Ashford, Suite 700,
Houston, Texas 77079
T +1 281 589 7257
E usinfrastructure@rpsgroup.com

SURVEYED BY:
FB NO. F-4578

FOR INTERIM REVIEW ONLY NOT INTENDED FOR PERMIT, BIDDING OR CONSTRUCTION PURPOSES.
ENGINEER:
HOSS FOROUZAN
P.E. SERIAL NO.77748
03/30/2026

CITY OF HOUSTON
HOUSTON PUBLIC WORKS

RECONSTRUCTION & REHABILITATION
COH LIFT STATIONS

WILL CLAYTON LIFT STATION CONTROL CABINET EQUIPMENT LAYOUT-I

WBS NUMBER	FOR CITY OF HOUSTON USE ONLY
R-000267-00178-3	
DRAWING SCALE	
AS NOTED	
CITY OF HOUSTON PM	
TAHA LOTIA	
SHEET NO. 221 OF 268	

PLOTTED: 3/26/2026 6:10 PM
FILE PATH: O:\H8109_Lift Station Rehabilitation And Reconstruction (Tetratech)\6 Drawings\Instrumentation And Control\Working\Will Clayton\H8109_WC-I-05.dwg

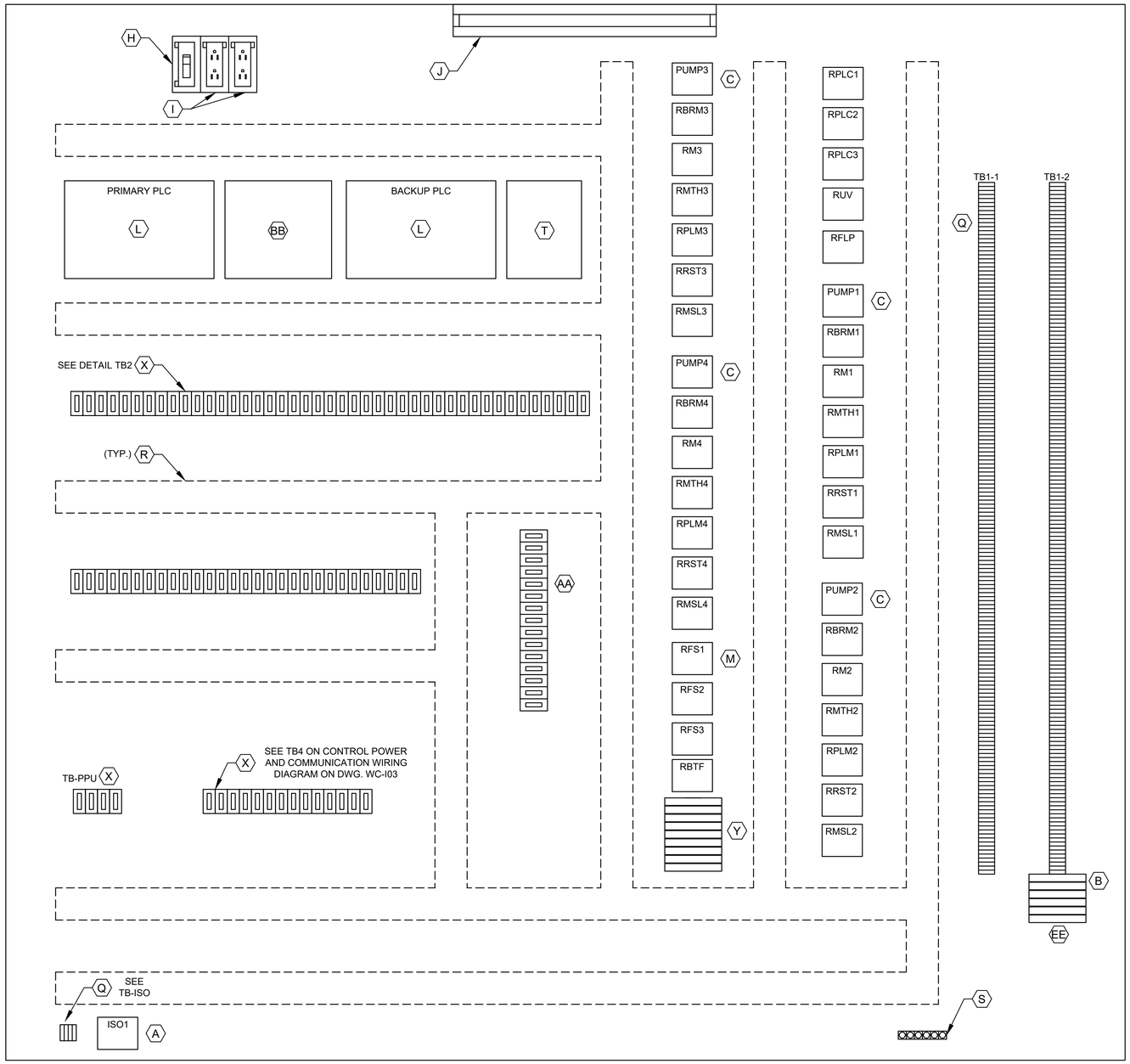

CONTROL PANEL ELEVATION

LEGEND	
TAG	DESCRIPTION
RMTH	MOTOR HIGH TEMPERATURE ALARM RELAY
RPLMP	PLC PUMP RUN RELAY
RRST	PUMP RESET AUX RELAY
RPLC	PLC MODE AUX RELAY
RM	PUMP RUN AUX RELAY
RUV	UNDER VOLTAGE RELAY
RBRM	BACKUP SYSTEM RUN RELAY
ISO	INTRINSICALLY SAFE RELAY
RFS	PUMP RUN FLOAT SWITCH RELAY
RMSL	MOTOR SEAL LEAK ALARM RELAY
RFLP	FLOAT LOCKOUT PUMP RELAY
RBTF	BIO-STRICKLING FILTER RELAY

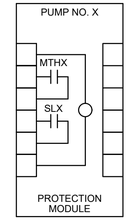

PUMP PROTECTION MODULE DETAIL, ITEM C

NOTE: REPLACE "X" WITH APPROPRIATE PUMP NO.

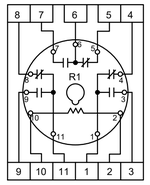

RELAY DETAIL ITEM M

REVISION				
NO.	DATE	BRIEF DESCRIPTION	BRIEF DESCRIPTION	APP.
	MM/DD/YY	XXX	XXX	XXX

L1A
L1N
SPARE
3
3N
SPARE
49
50
51
52
53
54
1004
1
24V-
24V-
SPARE
1002
2
11
1001
1001A
12
1003
1003A
34
3N
19
20
102
103
3P1
109
110
112
116
117
120
121
122
123
124
125
126
127
SPARE
SPARE
202
203
3P2
209
210
212
216
217
220
221
222
223
224
225
226
227

DETAIL TB1-1

SPARE
SPARE
302
303
3P3
309
310
312
316
317
320
321
322
323
324
325
326
327
SPARE
SPARE
402
403
3P4
409
410
412
416
417
420
421
422
423
424
425
426
427

DETAIL TB1-2

36A
37A
50
52
54
52A
52A
54A
L+
M
35B
38B
41B
44B
SPARE
SPARE
47B
50B
53B
13B
13AB
B
L+
M
14B
14AB
14GB
119
SPARE
L+
M
13
13A
13G
14
14A
14G
1M
2M
1L
3
30
32
34
37
38
41
33B
45
18B
SPARE

DETAIL TB2

100
112
113
114
115
117
118
119
120
121
SPARE
200
212
213
214
215
217
218
219
220
221
SPARE
300
312
313
314
315
317
318
319
320
321
SPARE
400
412
413
414
415
417
418
419
420
421
SPARE

DETAIL TB2

1500
1501
1503
1504

DETAIL TB-ISO

NOTES:

1. SEE SHEET WC-I4 FOR EQUIPMENT SCHEDULE.

GENERAL NOTES:

1. NO ELECTRICAL MATERIAL, APPARATUS, DEVICES, APPLIANCES, FIXTURES, OR EQUIPMENT SHALL BE SOLD OR INSTALLED IN THE CITY UNLESS THEY ARE IN CONFORMANCE WITH THE PROVISIONS OF SECTION 508 CITY OF HOUSTON ELECTRICAL CODE, THE LAWS OF THE STATE OF TEXAS AND ANY APPLICABLE RULES AND REGULATIONS ISSUED UNDER THE AUTHORITY OF THE STATE STATUES. THE MAKER'S NAME, TRADEMARK, OR OTHER IDENTIFICATION SYMBOL SHALL BE PLACED ON ALL ELECTRICAL MATERIALS, APPARATUS, DEVICES, APPLIANCES, FIXTURES, AND EQUIPMENT USED OR INSTALLED UNDER THE PROVISIONS OF THIS CODE. ALL ELECTRICAL MATERIALS AND EQUIPMENT SHALL BE LISTED AND LABELED FOR THE INTENDED USE AND SHALL BE INCLUDED IN A LIST PUBLISHED BY AN APPROVAL AGENCY.

RPS A TETRA TECH COMPANY
Texas PE Firm Reg. #F-929
575 N. Dairy Ashford, Suite 700,
Houston, Texas 77079
T +1 281 589 7257
E usinfrastructure@rpsgroup.com

SURVEYED BY:
FB NO. F-4578

FOR INTERIM REVIEW ONLY NOT INTENDED FOR PERMIT, BIDDING OR CONSTRUCTION PURPOSES.
ENGINEER:
HOSS FOROUZAN
P.E. SERIAL NO.77748
03/30/2026

CITY OF HOUSTON
HOUSTON PUBLIC WORKS

RECONSTRUCTION & REHABILITATION
COH LIFT STATIONS

WILL CLAYTON LIFT STATION CONTROL CABINET EQUIPMENT LAYOUT—II

WBS NUMBER	FOR CITY OF HOUSTON USE ONLY
R-000267-00178-3	
DRAWING SCALE	
AS NOTED	
CITY OF HOUSTON PM	
TAHA LOTIA	
SHEET NO. 222 OF 268	

WC-I-6

PLOTTED: 3/26/2026 6:10 PM
FILE PATH: O:\H8109_Lift Station Rehabilitation And Reconstruction (Tetratech)\6 Drawings\Instrumentation And Control\Working\Will Clayton\H8109_SWCLIFT-CABLayout

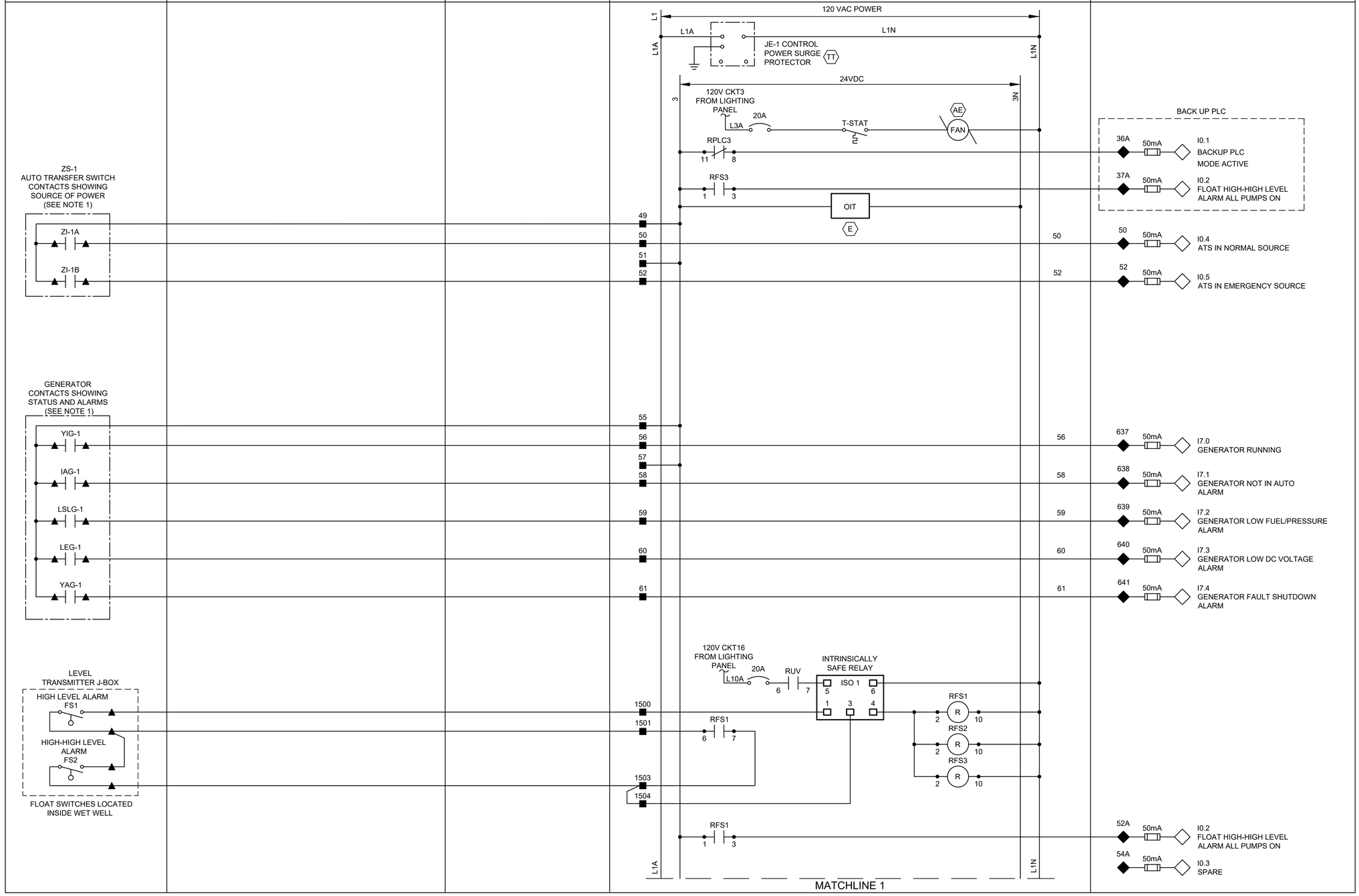

NOTES:

1. PROVIDE AUTOMATIC TRANSFER SWITCH DRY CONTACT.
2. ALL FLOAT CONTROL CIRCUIT WIRES COLOR SHALL BE YELLOW.

GENERAL NOTES:

1. NO ELECTRICAL MATERIAL, APPARATUS, DEVICES, APPLIANCES, FIXTURES, OR EQUIPMENT SHALL BE SOLD OR INSTALLED IN THE CITY UNLESS THEY ARE IN CONFORMANCE WITH THE PROVISIONS OF SECTION 508 CITY OF HOUSTON ELECTRICAL CODE, THE LAWS OF THE STATE OF TEXAS AND ANY APPLICABLE RULES AND REGULATIONS ISSUED UNDER THE AUTHORITY OF THE STATE STATUES. THE MAKER'S NAME, TRADEMARK, OR OTHER IDENTIFICATION SYMBOL SHALL BE PLACED ON ALL ELECTRICAL MATERIALS, APPARATUS, DEVICES, APPLIANCES, FIXTURES, AND EQUIPMENT USED OR INSTALLED UNDER THE PROVISIONS OF THIS CODE. ALL ELECTRICAL MATERIALS AND EQUIPMENT SHALL BE LISTED AND LABELED FOR THE INTENDED USE AND SHALL BE INCLUDED IN A LIST PUBLISHED BY AN APPROVAL AGENCY.

LEGEND

- △ DEVICE OR FIELD TERMINAL LOCATED AT MOTOR
- ✳ DEVICE OR FIELD TERMINAL LOCATED REMOTE
- □ DEVICE OR FIELD TERMINAL LOCATED AT MCC/POWER PANEL
- ■ FIELD TERMINAL LOCATED AT CONTROL PANEL
- ▲ REMOTE TERMINAL
- ● DEVICE TERMINAL NO.
- ◆ PLC INTERFACE TERMINAL

NO.	DATE	REVISION	APP.
	MM/DD/YY	BRIEF DESCRIPTION	XXX
	MM/DD/YY	BRIEF DESCRIPTION	XXX
	MM/DD/YY	BRIEF DESCRIPTION	XXX

rps
A TETRA TECH COMPANY
Texas PE Firm Reg. #F-929
575 N. Dairy Ashford, Suite 700, Houston, Texas 77079
T +1 281 589 7257
E usinfrastructure@rpsgroup.com

SURVEYED BY:
FB NO. F-4578

FOR INTERIM REVIEW ONLY NOT INTENDED FOR PERMIT, BIDDING OR CONSTRUCTION PURPOSES.
ENGINEER:
HOSS FOROUZAN
P.E. SERIAL NO.77748
03/30/2026

CITY OF HOUSTON
HOUSTON PUBLIC WORKS

RECONSTRUCTION & REHABILITATION
COH LIFT STATIONS

WILL CLAYTON LIFT STATION CONTROL PANEL CONTROL WIRING DIAGRAM-I

WBS NUMBER	FOR CITY OF HOUSTON USE ONLY
R-000267-00178-3	
DRAWING SCALE	
AS NOTED	
CITY OF HOUSTON PM	
TAHA LOTIA	
SHEET NO. 223 OF 268	

WC-I-7

PLOTTED: 3/26/2026 6:10 PM
FILE PATH: O:\H8109_Lift Station Rehabilitation And Reconstruction (Tetratech)\6 Drawings\Instrumentation And Control\!Working\Will Clayton\H8109_WC-I-7.dwg

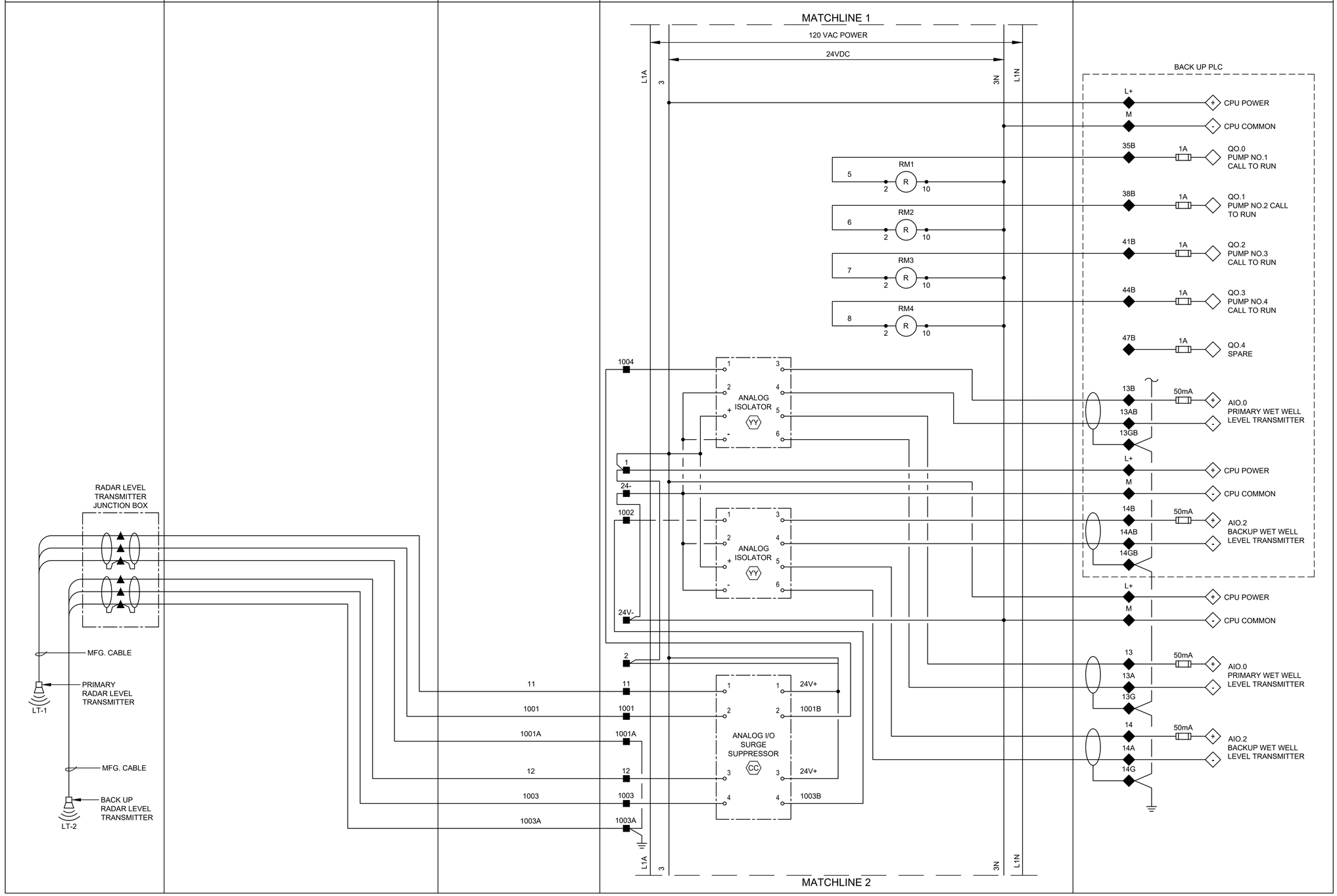

LEGEND

- △ DEVICE OR FIELD TERMINAL LOCATED AT MOTOR
- ✳ DEVICE OR FIELD TERMINAL LOCATED REMOTE
- □ DEVICE OR FIELD TERMINAL LOCATED AT MCC/POWER PANEL
- ■ FIELD TERMINAL LOCATED AT CONTROL PANEL
- ▲ REMOTE TERMINAL
- ● DEVICE TERMINAL NO.
- ◆ PLC INTERFACE TERMINAL

GENERAL NOTES:

1. NO ELECTRICAL MATERIAL, APPARATUS, DEVICES, APPLIANCES, FIXTURES, OR EQUIPMENT SHALL BE SOLD OR INSTALLED IN THE CITY UNLESS THEY ARE IN CONFORMANCE WITH THE PROVISIONS OF SECTION 508 CITY OF HOUSTON ELECTRICAL CODE, THE LAWS OF THE STATE OF TEXAS AND ANY APPLICABLE RULES AND REGULATIONS ISSUED UNDER THE AUTHORITY OF THE STATE STATUES. THE MAKER'S NAME, TRADEMARK, OR OTHER IDENTIFICATION SYMBOL SHALL BE PLACED ON ALL ELECTRICAL MATERIALS, APPARATUS, DEVICES, APPLIANCES, FIXTURES, AND EQUIPMENT USED OR INSTALLED UNDER THE PROVISIONS OF THIS CODE. ALL ELECTRICAL MATERIALS AND EQUIPMENT SHALL BE LISTED AND LABELED FOR THE INTENDED USE AND SHALL BE INCLUDED IN A LIST PUBLISHED BY AN APPROVAL AGENCY.

NO.	DATE	REVISION	APP.
	MM/DD/YY	BRIEF DESCRIPTION	XXX
	MM/DD/YY	BRIEF DESCRIPTION	XXX
	MM/DD/YY	BRIEF DESCRIPTION	XXX

rps
A TETRA TECH COMPANY
Texas PE Firm Reg. #F-929
575 N. Dairy Ashford, Suite 700,
Houston, Texas 77079
T +1 281 589 7257
E usinfrastructure@rpsgroup.com

FOR INTERIM REVIEW ONLY NOT INTENDED FOR PERMIT, BIDDING OR CONSTRUCTION PURPOSES.
ENGINEER:
HOSS FOROUZAN
P.E. SERIAL NO.77748
03/30/2026

SURVEYED BY:
FB NO. F-4578

CITY OF HOUSTON
HOUSTON PUBLIC WORKS

RECONSTRUCTION & REHABILITATION
COH LIFT STATIONS

WILL CLAYTON LIFT STATION CONTROL PANEL CONTROL WIRING DIAGRAM-II

WBS NUMBER	FOR CITY OF HOUSTON USE ONLY
R-000267-00178-3	
DRAWING SCALE	
AS NOTED	
CITY OF HOUSTON PM	
TAHA LOTIA	
SHEET NO. 224 OF 268	

WC-I-8

FILE PATH: O:\H8109_Lift Station Rehabilitation And Reconstruction (Tetratech)\6 Drawings\Instrumentation And Control\!Working\Will Clayton\H8109_WC-I-08.dwg
PLOTTED: 3/26/2026 6:10 PM

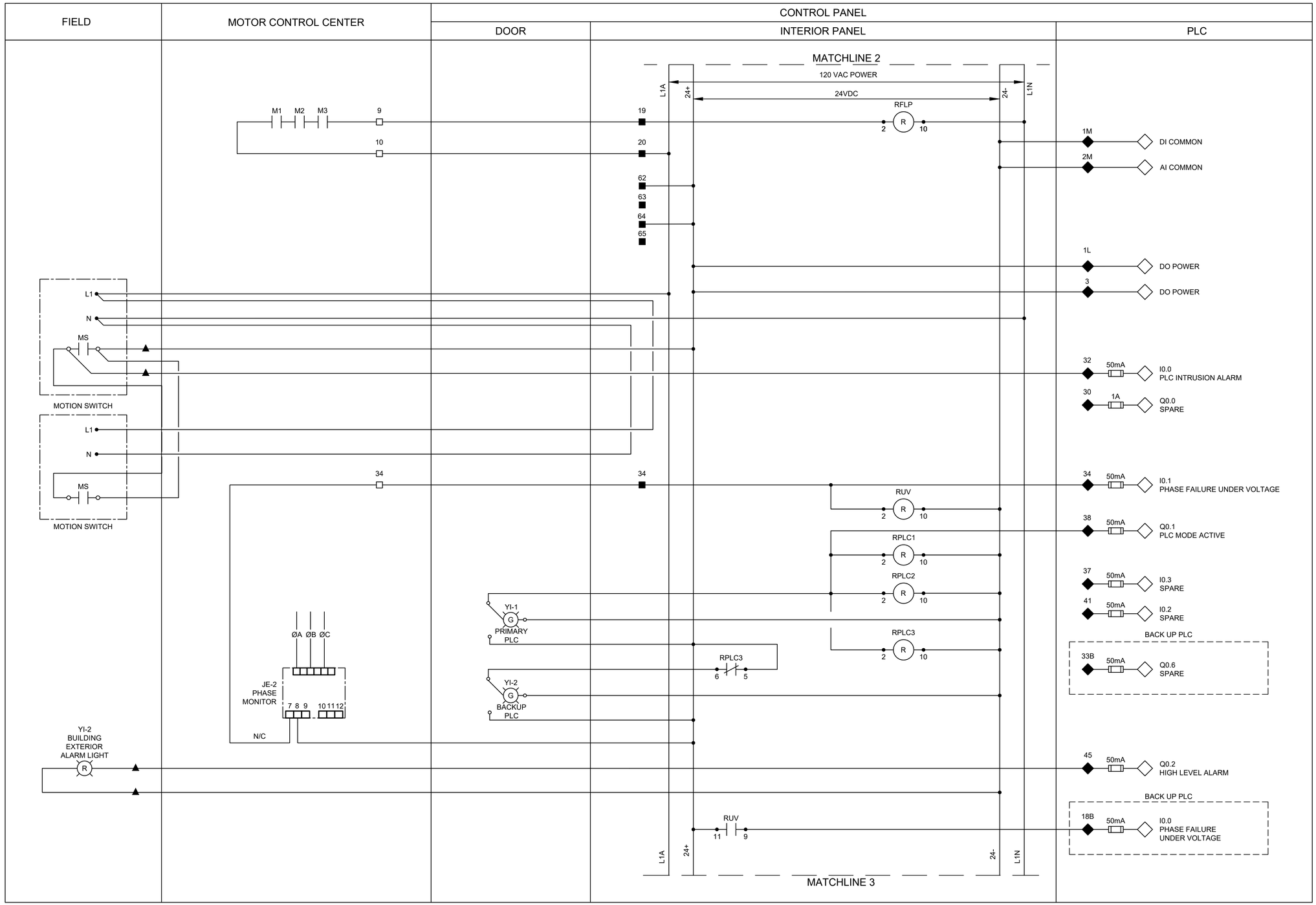

LEGEND

- △ DEVICE OR FIELD TERMINAL LOCATED AT MOTOR
- ✳ DEVICE OR FIELD TERMINAL LOCATED REMOTE
- □ DEVICE OR FIELD TERMINAL LOCATED AT MCC/POWER PANEL
- ■ FIELD TERMINAL LOCATED AT CONTROL PANEL
- ▲ REMOTE TERMINAL
- ● DEVICE TERMINAL NO.
- ◆ PLC INTERFACE TERMINAL

NOTES:

1. PROVIDE ONE LIMIT SWITCH PER EXTERIOR CONTROL PANEL AND POWER PANEL DOOR, WIRED IN PARALLEL.
2. RUNNING STATUS AND ALARM FROM MANUFACTURER PROVIDED BIO-TRICKLING CONTROL PANEL.

GENERAL NOTES:

1. NO ELECTRICAL MATERIAL, APPARATUS, DEVICES, APPLIANCES, FIXTURES, OR EQUIPMENT SHALL BE SOLD OR INSTALLED IN THE CITY UNLESS THEY ARE IN CONFORMANCE WITH THE PROVISIONS OF SECTION 508 CITY OF HOUSTON ELECTRICAL CODE, THE LAWS OF THE STATE OF TEXAS AND ANY APPLICABLE RULES AND REGULATIONS ISSUED UNDER THE AUTHORITY OF THE STATE STATUES. THE MAKER'S NAME, TRADEMARK, OR OTHER IDENTIFICATION SYMBOL SHALL BE PLACED ON ALL ELECTRICAL MATERIALS, APPARATUS, DEVICES, APPLIANCES, FIXTURES, AND EQUIPMENT USED OR INSTALLED UNDER THE PROVISIONS OF THIS CODE. ALL ELECTRICAL MATERIALS AND EQUIPMENT SHALL BE LISTED AND LABELED FOR THE INTENDED USE AND SHALL BE INCLUDED IN A LIST PUBLISHED BY AN APPROVAL AGENCY.

NO.	DATE	REVISION	APP.
	MM/DD/YY	BRIEF DESCRIPTION	XXX
	MM/DD/YY	BRIEF DESCRIPTION	XXX
	MM/DD/YY	BRIEF DESCRIPTION	XXX

rps
A TETRA TECH COMPANY
Texas PE Firm Reg. #F-929
575 N. Dairy Ashford, Suite 700,
Houston, Texas 77079
T +1 281 589 7257
E usinfrastructure@rpsgroup.com

FOR INTERIM REVIEW ONLY NOT INTENDED FOR PERMIT, BIDDING OR CONSTRUCTION PURPOSES.
ENGINEER:
HOSS FOROUZAN
P.E. SERIAL NO.77748
03/30/2026

SURVEYED BY:
FB NO. F-4578

CITY OF HOUSTON
HOUSTON PUBLIC WORKS

RECONSTRUCTION & REHABILITATION
COH LIFT STATIONS

WILL CLAYTON LIFT STATION CONTROL PANEL CONTROL WIRING DIAGRAM-III

WBS NUMBER	FOR CITY OF HOUSTON USE ONLY
R-000267-00178-3	
DRAWING SCALE	
AS NOTED	
CITY OF HOUSTON PM	
TAHA LOTIA	
SHEET NO. 225 OF 268	

WC-I-9

PLOTTED: 3/26/2026 6:10 PM
FILE PATH: O:\H8109_Lift Station Rehabilitation And Reconstruction (Tetratech)\6 Drawings\Instrumentation And Control\Working\Will Clayton\H8109_WC-I-03.dwg

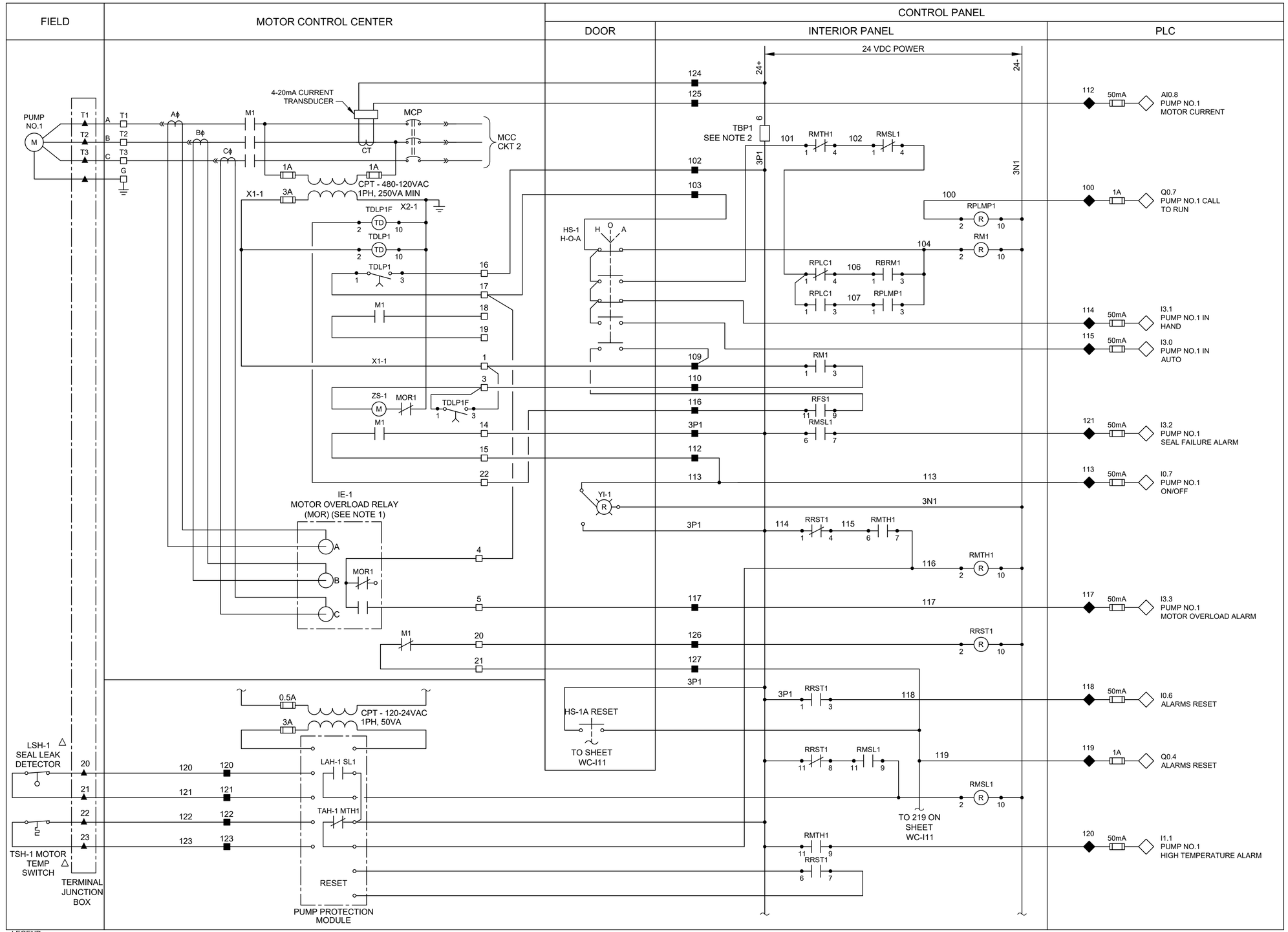

LEGEND

- △ DEVICE OR FIELD TERMINAL LOCATED AT MOTOR
- ✳ DEVICE OR FIELD TERMINAL LOCATED REMOTE
- □ DEVICE OR FIELD TERMINAL LOCATED AT MCC/POWER PANEL
- ■ FIELD TERMINAL LOCATED AT CONTROL PANEL
- ▲ REMOTE TERMINAL
- ● DEVICE TERMINAL NO.
- ◆ PLC INTERFACE TERMINAL

NOTES:

1. MOTOR OVERLOAD RELAY OUTPUT CONTACT SHOWN IS NORMALLY CLOSED WHEN RELAY IS DE-ENERGIZED, OPEN WHEN ENERGIZED, AND CLOSED WHEN IN ALARM. VERIFY OPERATION OF RELAY PROVIDED AND ADJUST CONNECTION OF RMOR AUXILIARY RELAYS.
2. FUSED TERMINAL ON TERMINAL BLOCK TB4 SEE CONTROL POWER AND COMMUNICATION WIRING DIAGRAM DRAWING NO. WC-I3.
3. ALL FLOAT CONTROL CIRCUIT WIRES COLOR SHALL BE YELLOW.

GENERAL NOTES:

1. NO ELECTRICAL MATERIAL, APPARATUS, DEVICES, APPLIANCES, FIXTURES, OR EQUIPMENT SHALL BE SOLD OR INSTALLED IN THE CITY UNLESS THEY ARE IN CONFORMANCE WITH THE PROVISIONS OF SECTION 508 CITY OF HOUSTON ELECTRICAL CODE, THE LAWS OF THE STATE OF TEXAS AND ANY APPLICABLE RULES AND REGULATIONS ISSUED UNDER THE AUTHORITY OF THE STATE STATUES. THE MAKER'S NAME, TRADEMARK, OR OTHER IDENTIFICATION SYMBOL SHALL BE PLACED ON ALL ELECTRICAL MATERIALS, APPARATUS, DEVICES, APPLIANCES, FIXTURES, AND EQUIPMENT USED OR INSTALLED UNDER THE PROVISIONS OF THIS CODE. ALL ELECTRICAL MATERIALS AND EQUIPMENT SHALL BE LISTED AND LABELED FOR THE INTENDED USE AND SHALL BE INCLUDED IN A LIST PUBLISHED BY AN APPROVAL AGENCY.

NO.	DATE	REVISION	BRIEF DESCRIPTION	APP.
	MM/DD/YY	BRIEF DESCRIPTION	BRIEF DESCRIPTION	XXX
	MM/DD/YY	BRIEF DESCRIPTION	BRIEF DESCRIPTION	XXX
	MM/DD/YY	BRIEF DESCRIPTION	BRIEF DESCRIPTION	XXX

RPS A TETRA TECH COMPANY
Texas PE Firm Reg. #F-929
575 N. Dairy Ashford, Suite 700, Houston, Texas 77079
T +1 281 589 7257
E usinfrastructure@rpsgroup.com

SURVEYED BY:
FB NO. F-4578

FOR INTERIM REVIEW ONLY NOT INTENDED FOR PERMIT, BIDDING OR CONSTRUCTION PURPOSES.
ENGINEER:
HOSS FOROUZAN
P.E. SERIAL NO.77748
03/30/2026

CITY OF HOUSTON
HOUSTON PUBLIC WORKS

RECONSTRUCTION & REHABILITATION
COH LIFT STATIONS

WILL CLAYTON LIFT STATION PUMP NO.1 CONTROL WIRING DIAGRAM

WBS NUMBER	FOR CITY OF HOUSTON USE ONLY
R-000267-00178-3	
DRAWING SCALE	
AS NOTED	
CITY OF HOUSTON PM	
TAHA LOTIA	
SHEET NO. 226 OF 268	

WC-I-10

PLOTTED: 3/26/2026 6:10 PM
FILE PATH: O:\H8109_Lift Station Rehabilitation And Reconstruction (Tetratech)\6 Drawings\Instrumentation And Control\Working\Will Clayton\H8109_WC-I-10.dwg

FILE PATH: O:\H8109_Lift Station Rehabilitation And Reconstruction (Tetratech)\6 Drawings\Instrumentation And Control\Working\Will Clayton\H8109_WCLS-I-11.dwg

PLOTTED: 3/26/2026 6:11 PM

FIELD | MOTOR CONTROL CENTER | CONTROL PANEL (DOOR | INTERIOR PANEL | PLC)

PUMP NO.2 M
T1 T2 T3 G
A B C
Aϕ Bϕ Cϕ
M1
4-20mA CURRENT TRANSDUCER
MCP
CT
MCC CKT 3
1A 1A
CPT - 480-120VAC 1PH, 250VA MIN
X1-2 3A X2-2

IE-2
MOTOR OVERLOAD RELAY
(MOR) (SEE NOTE 1)
A B C
MOR2

TDLP2F TDLP2 TDLP2
M2
ZS-2 MOR2
TDLP2F
M2

0.5A 3A
CPT - 120-24VAC 1PH, 50VA

LSH-2 SEAL LEAK DETECTOR
TSH-2 MOTOR TEMP SWITCH
TERMINAL JUNCTION BOX
LAH-2 SL2
TAH-2 MTH2
RESET
PUMP PROTECTION MODULE

24 VDC POWER
24+ 24-
TBP2 SEE NOTE 2
3P2 3N2
RMTH2 RMSL2
RPLMP2 RM2
HS-2 H-O-A
RPLC1 RBRM2 RPLC1 RPLMP2
RM2 RFS2 RMSL2
YI-2
RRST2 RMTH2 RMTH2 RRST2 RMSL2 RMTH2 RRST2
FROM SHEET WC-I10
TO SHEET WC-I12
FROM 119 ON SHEET WC-I10
TO 319 ON SHEET WC-I12

212	AI1.0 PUMP NO.2 MOTOR CURRENT
200	Q1.0 PUMP NO.2 CALL TO RUN
214	I3.5 PUMP NO.2 IN HAND
215	I3.4 PUMP NO.2 IN AUTO
221	I3.6 PUMP NO.2 SEAL FAILURE ALARM
213	I1.2 PUMP NO.2 ON/OFF
217	I3.7 PUMP NO.2 MOTOR OVERLOAD ALARM
220	I1.3 PUMP NO.2 HIGH TEMPERATURE ALARM

LEGEND
- △ DEVICE OR FIELD TERMINAL LOCATED AT MOTOR
- ✳ DEVICE OR FIELD TERMINAL LOCATED REMOTE
- □ DEVICE OR FIELD TERMINAL LOCATED AT MCC/POWER PANEL
- ■ FIELD TERMINAL LOCATED AT CONTROL PANEL
- ▲ REMOTE TERMINAL
- ● DEVICE TERMINAL NO.
- ◆ PLC INTERFACE TERMINAL

NOTES:

1. MOTOR OVERLOAD RELAY OUTPUT CONTACT SHOWN IS NORMALLY CLOSED WHEN RELAY IS DE-ENERGIZED, OPEN WHEN ENERGIZED, AND CLOSED WHEN IN ALARM. VERIFY OPERATION OF RELAY PROVIDED AND ADJUST CONNECTION OF RMOR AUXILIARY RELAYS.
2. FUSED TERMINAL ON TERMINAL BLOCK TB4 SEE CONTROL POWER AND COMMUNICATION WIRING DIAGRAM DRAWING NO. WC-I3.
3. ALL FLOAT CONTROL CIRCUIT WIRES COLOR SHALL BE YELLOW.

GENERAL NOTES:

1. NO ELECTRICAL MATERIAL, APPARATUS, DEVICES, APPLIANCES, FIXTURES, OR EQUIPMENT SHALL BE SOLD OR INSTALLED IN THE CITY UNLESS THEY ARE IN CONFORMANCE WITH THE PROVISIONS OF SECTION 508 CITY OF HOUSTON ELECTRICAL CODE, THE LAWS OF THE STATE OF TEXAS AND ANY APPLICABLE RULES AND REGULATIONS ISSUED UNDER THE AUTHORITY OF THE STATE STATUES. THE MAKER'S NAME, TRADEMARK, OR OTHER IDENTIFICATION SYMBOL SHALL BE PLACED ON ALL ELECTRICAL MATERIALS, APPARATUS, DEVICES, APPLIANCES, FIXTURES, AND EQUIPMENT USED OR INSTALLED UNDER THE PROVISIONS OF THIS CODE. ALL ELECTRICAL MATERIALS AND EQUIPMENT SHALL BE LISTED AND LABELED FOR THE INTENDED USE AND SHALL BE INCLUDED IN A LIST PUBLISHED BY AN APPROVAL AGENCY.

NO.	DATE	REVISION	APP.
	MM/DD/YY	BRIEF DESCRIPTION	XXX
	MM/DD/YY	BRIEF DESCRIPTION	XXX
	MM/DD/YY	BRIEF DESCRIPTION	XXX

RPS A TETRA TECH COMPANY
Texas PE Firm Reg. #F-929
575 N. Dairy Ashford, Suite 700, Houston, Texas 77079
T +1 281 589 7257
E usinfrastructure@rpsgroup.com

SURVEYED BY:
FB NO. F-4578

FOR INTERIM REVIEW ONLY NOT INTENDED FOR PERMIT, BIDDING OR CONSTRUCTION PURPOSES.
ENGINEER:
HOSS FOROUZAN
P.E. SERIAL NO.77748
03/30/2026

CITY OF HOUSTON
HOUSTON PUBLIC WORKS

RECONSTRUCTION & REHABILITATION
COH LIFT STATIONS

WILL CLAYTON LIFT STATION PUMP NO.2 CONTROL WIRING DIAGRAM

WBS NUMBER	FOR CITY OF HOUSTON USE ONLY
R-000267-00178-3	
DRAWING SCALE	
AS NOTED	
CITY OF HOUSTON PM	
TAHA LOTIA	
SHEET NO. 227 OF 268	

WC-I-11

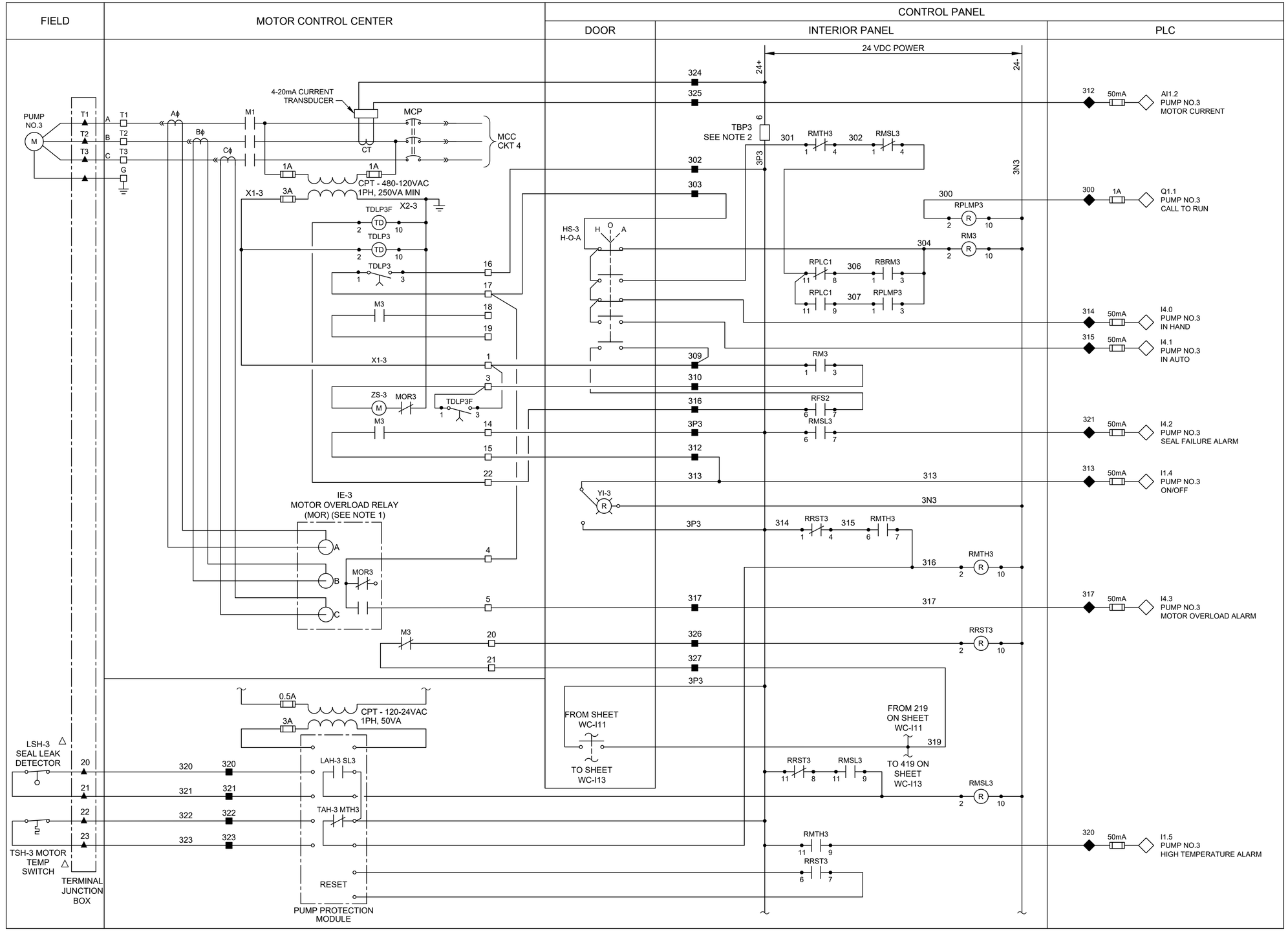

LEGEND

- △ DEVICE OR FIELD TERMINAL LOCATED AT MOTOR
- ✳ DEVICE OR FIELD TERMINAL LOCATED REMOTE
- □ DEVICE OR FIELD TERMINAL LOCATED AT MCC/POWER PANEL
- ■ FIELD TERMINAL LOCATED AT CONTROL PANEL
- ▲ REMOTE TERMINAL
- ● DEVICE TERMINAL NO.
- ◆ PLC INTERFACE TERMINAL

NOTES:

1. MOTOR OVERLOAD RELAY OUTPUT CONTACT SHOWN NORMALLY CLOSED WHEN RELAY IS DE-ENERGIZED, OPEN WHEN ENERGIZED, AND CLOSED WHEN IN ALARM. VERIFY OPERATION OF RELAY PROVIDED AND ADJUST CONNECTION OF RMOR AUXILIARY RELAYS.
2. FUSED TERMINAL ON TERMINAL BLOCK TB4 SEE CONTROL POWER AND COMMUNICATION WIRING DIAGRAM. DRAWING NO. WC-I3.
3. ALL FLOAT CONTROL CIRCUIT WIRES COLOR SHALL BE YELLOW.

GENERAL NOTES:

1. NO ELECTRICAL MATERIAL, APPARATUS, DEVICES, APPLIANCES, FIXTURES, OR EQUIPMENT SHALL BE SOLD OR INSTALLED IN THE CITY UNLESS THEY ARE IN CONFORMANCE WITH THE PROVISIONS OF SECTION 508 CITY OF HOUSTON ELECTRICAL CODE, THE LAWS OF THE STATE OF TEXAS AND ANY APPLICABLE RULES AND REGULATIONS ISSUED UNDER THE AUTHORITY OF THE STATE STATUES. THE MAKER'S NAME, TRADEMARK, OR OTHER IDENTIFICATION SYMBOL SHALL BE PLACED ON ALL ELECTRICAL MATERIALS, APPARATUS, DEVICES, APPLIANCES, FIXTURES, AND EQUIPMENT USED OR INSTALLED UNDER THE PROVISIONS OF THIS CODE. ALL ELECTRICAL MATERIALS AND EQUIPMENT SHALL BE LISTED AND LABELED FOR THE INTENDED USE AND SHALL BE INCLUDED IN A LIST PUBLISHED BY AN APPROVAL AGENCY.

NO.	DATE	REVISION	APP.
	MM/DD/YY	BRIEF DESCRIPTION	XXX
	MM/DD/YY	BRIEF DESCRIPTION	XXX
	MM/DD/YY	BRIEF DESCRIPTION	XXX

RPS A TETRA TECH COMPANY
Texas PE Firm Reg. #F-929
575 N. Dairy Ashford, Suite 700, Houston, Texas 77079
T +1 281 589 7257
E usinfrastructure@rpsgroup.com

SURVEYED BY:
FB NO. F-4578

FOR INTERIM REVIEW ONLY NOT INTENDED FOR PERMIT, BIDDING OR CONSTRUCTION PURPOSES.
ENGINEER:
HOSS FOROUZAN
P.E. SERIAL NO.77748
03/30/2026

CITY OF HOUSTON
HOUSTON PUBLIC WORKS

RECONSTRUCTION & REHABILITATION
COH LIFT STATIONS

WILL CLAYTON LIFT STATION PUMP NO.3 CONTROL WIRING DIAGRAM

WBS NUMBER	FOR CITY OF HOUSTON USE ONLY
R-000267-00178-3	
DRAWING SCALE	
AS NOTED	
CITY OF HOUSTON PM	
TAHA LOTIA	
SHEET NO. 228 OF 268	

WC-I-12

PLOTTED: 3/26/2026 6:11 PM
FILE PATH: O:\H8109_Lift Station Rehabilitation And Reconstruction (Tetratech)\6 Drawings\Instrumentation And Control\Working\Will Clayton\H8109_WC-I-12.dwg

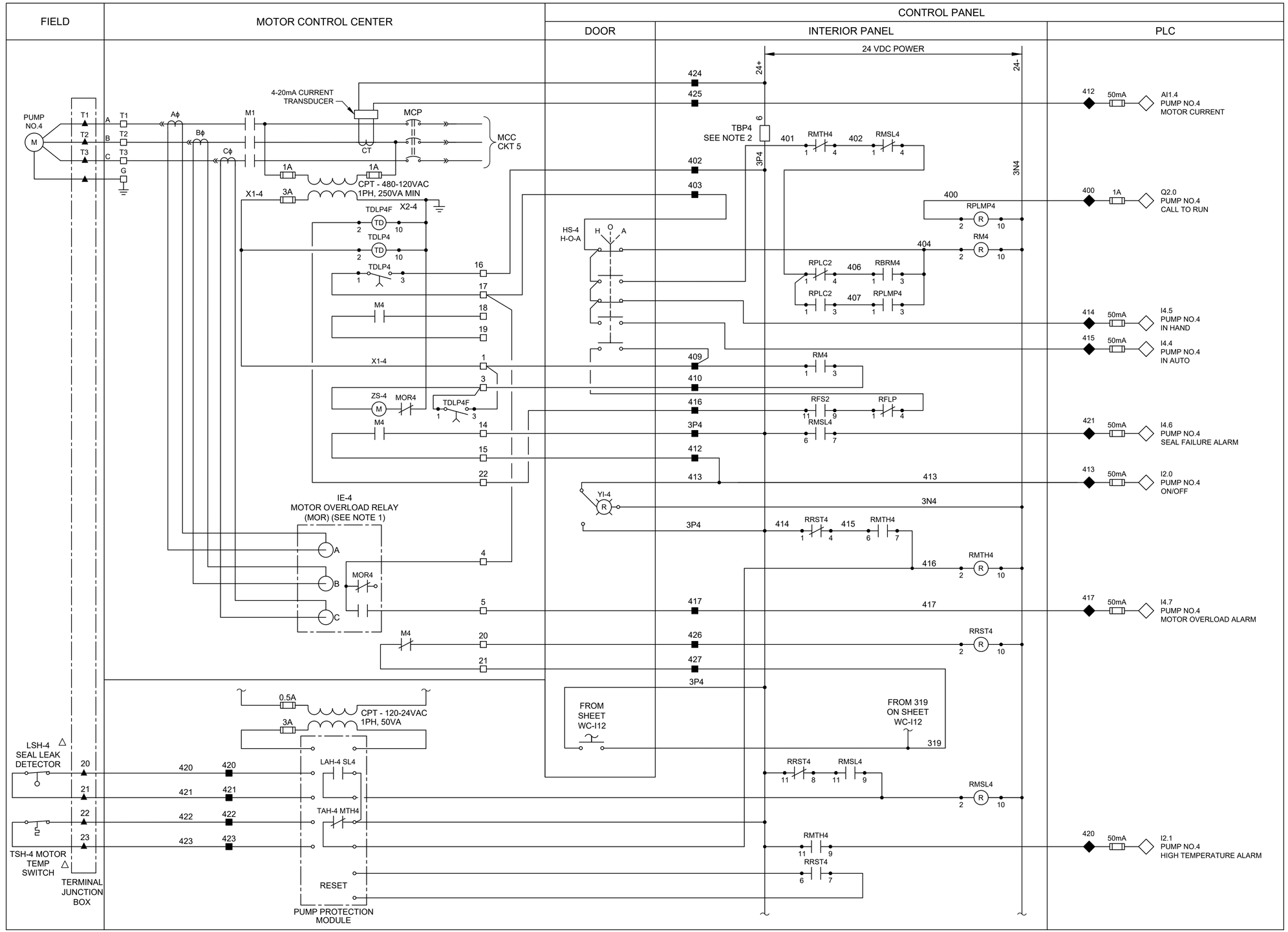

LEGEND

- △ DEVICE OR FIELD TERMINAL LOCATED AT MOTOR
- ✳ DEVICE OR FIELD TERMINAL LOCATED REMOTE
- □ DEVICE OR FIELD TERMINAL LOCATED AT MCC/POWER PANEL
- ■ FIELD TERMINAL LOCATED AT CONTROL PANEL
- ▲ REMOTE TERMINAL
- ● DEVICE TERMINAL NO.
- ◆ PLC INTERFACE TERMINAL

NOTES:

1. MOTOR OVERLOAD RELAY OUTPUT CONTACT SHOWN NORMALLY CLOSED WHEN RELAY IS DE-ENERGIZED, OPEN WHEN ENERGIZED, AND CLOSED WHEN IN ALARM. VERIFY OPERATION OF RELAY PROVIDED AND ADJUST CONNECTION OF RMOR AUXILIARY RELAYS.
2. FUSED TERMINAL ON TERMINAL BLOCK TB4 SEE CONTROL POWER AND COMMUNICATION WIRING DIAGRAM. DRAWING NO. E-181-702.
3. ALL FLOAT CONTROL CIRCUIT WIRES COLOR SHALL BE YELLOW.

GENERAL NOTES:

1. NO ELECTRICAL MATERIAL, APPARATUS, DEVICES, APPLIANCES, FIXTURES, OR EQUIPMENT SHALL BE SOLD OR INSTALLED IN THE CITY UNLESS THEY ARE IN CONFORMANCE WITH THE PROVISIONS OF SECTION 508 CITY OF HOUSTON ELECTRICAL CODE, THE LAWS OF THE STATE OF TEXAS AND ANY APPLICABLE RULES AND REGULATIONS ISSUED UNDER THE AUTHORITY OF THE STATE STATUES. THE MAKER'S NAME, TRADEMARK, OR OTHER IDENTIFICATION SYMBOL SHALL BE PLACED ON ALL ELECTRICAL MATERIALS, APPARATUS, DEVICES, APPLIANCES, FIXTURES, AND EQUIPMENT USED OR INSTALLED UNDER THE PROVISIONS OF THIS CODE. ALL ELECTRICAL MATERIALS AND EQUIPMENT SHALL BE LISTED AND LABELED FOR THE INTENDED USE AND SHALL BE INCLUDED IN A LIST PUBLISHED BY AN APPROVAL AGENCY.

NO.	DATE	REVISION	APP.
	MM/DD/YY	BRIEF DESCRIPTION	XXX
	MM/DD/YY	BRIEF DESCRIPTION	XXX
	MM/DD/YY	BRIEF DESCRIPTION	XXX

RPS A TETRA TECH COMPANY
Texas PE Firm Reg. #F-929
575 N. Dairy Ashford, Suite 700,
Houston, Texas 77079
T +1 281 589 7257
E usinfrastructure@rpsgroup.com

SURVEYED BY:
FB NO. F-4578

FOR INTERIM REVIEW ONLY NOT INTENDED FOR PERMIT, BIDDING OR CONSTRUCTION PURPOSES.
ENGINEER:
HOSS FOROUZAN
P.E. SERIAL NO.77748
03/30/2026

CITY OF HOUSTON
HOUSTON PUBLIC WORKS

RECONSTRUCTION & REHABILITATION
COH LIFT STATIONS

WILL CLAYTON LIFT STATION PUMP NO.4 CONTROL WIRING DIAGRAM

WBS NUMBER	FOR CITY OF HOUSTON USE ONLY
R-000267-00178-3	
DRAWING SCALE	
AS NOTED	
CITY OF HOUSTON PM	
TAHA LOTIA	
SHEET NO. 229 OF 268	

WC-I-13

PLOTTED: 3/26/2026 6:11 PM
FILE PATH: O:\H8109_Lift Station Rehabilitation And Reconstruction (Tetratech)\6 Drawings\Instrumentation And Control\Working\Will Clayton\H8109_WC-I-13.dwg

NO.	DATE	REVISION	APP.
	MM/DD/YY	BRIEF DESCRIPTION	XXX
	MM/DD/YY	BRIEF DESCRIPTION	XXX
	MM/DD/YY	BRIEF DESCRIPTION	XXX

RPS
A TETRA TECH COMPANY
Texas PE Firm Reg. #F-929
575 N. Dairy Ashford, Suite 700,
Houston, Texas 77079
T +1 281 589 7257
E usinfrastructure@rpsgroup.com

SURVEYED BY: KUO Inc.
FB NO. F-4578

ENGINEER'S SEAL

CITY OF HOUSTON
HOUSTON PUBLIC WORKS

RECONSTRUCTION & REHABILITATION
COH LIFT STATIONS

SURVEY DATA – HEATHER RIDGE
HR-SC-1

WBS NUMBER	FOR CITY OF HOUSTON USE ONLY
R-000267-0178-3	
DRAWING SCALE	
AS NOTED	
CITY OF HOUSTON PM	
TAHA LOTIA	
SHEET NO. 230 OF 268	

PLOT STYLE: 007_oce_coh_0620_src14.ctb PLOTTED: 3/30/2026 5:12 PM
FILE NAME: SURVEY DATA.dwg

National Flood Hazard Layer FIRMette

FEMA

95°18'6"W 29°58'5"N

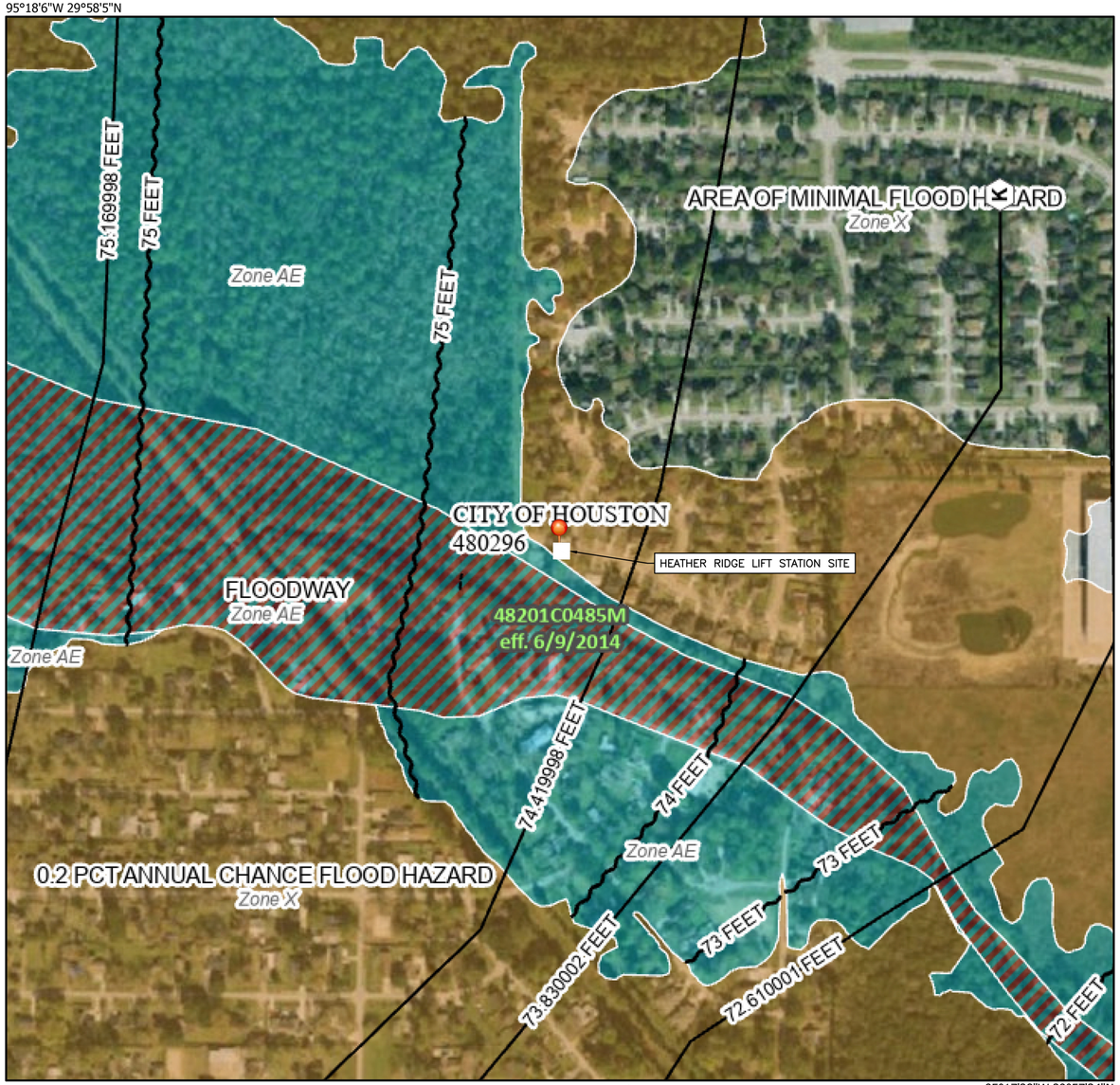

95°17'28"W 29°57'34"N

0 250 500 1,000 1,500 2,000 Feet

1:6,000

Basemap Imagery Source: USGS National Map 2023

Legend

SEE FIS REPORT FOR DETAILED LEGEND AND INDEX MAP FOR FIRM PANEL LAYOUT

SPECIAL FLOOD HAZARD AREAS
- Without Base Flood Elevation (BFE) *Zone A, V, A99*
- With BFE or Depth *Zone AE, AO, AH, VE, AR*
- Regulatory Floodway

OTHER AREAS OF FLOOD HAZARD
- 0.2% Annual Chance Flood Hazard, Areas of 1% annual chance flood with average depth less than one foot or with drainage areas of less than one square mile *Zone X*
- Future Conditions 1% Annual Chance Flood Hazard *Zone X*
- Area with Reduced Flood Risk due to Levee. See Notes. *Zone X*
- Area with Flood Risk due to Levee *Zone D*

OTHER AREAS
- NO SCREEN Area of Minimal Flood Hazard *Zone X*
- Effective LOMRs
- Area of Undetermined Flood Hazard *Zone D*

GENERAL STRUCTURES
- Channel, Culvert, or Storm Sewer
- Levee, Dike, or Floodwall

OTHER FEATURES
- 20.2 / 17.5 Cross Sections with 1% Annual Chance Water Surface Elevation
- Coastal Transect
- 513 Base Flood Elevation Line (BFE)
- Limit of Study
- Jurisdiction Boundary
- Coastal Transect Baseline
- Profile Baseline
- Hydrographic Feature

MAP PANELS
- Digital Data Available
- No Digital Data Available
- Unmapped

N

The pin displayed on the map is an approximate point selected by the user and does not represent an authoritative property location.

This map complies with FEMA's standards for the use of digital flood maps if it is not void as described below. The basemap shown complies with FEMA's basemap accuracy standards

The flood hazard information is derived directly from the authoritative NFHL web services provided by FEMA. This map was exported on 7/31/2024 at 2:03 PM and does not reflect changes or amendments subsequent to this date and time. The NFHL and effective information may change or become superseded by new data over time.

This map image is void if the one or more of the following map elements do not appear: basemap imagery, flood zone labels, legend, scale bar, map creation date, community identifiers, FIRM panel number, and FIRM effective date. Map images for unmapped and unmodernized areas cannot be used for regulatory purposes.

RPS A TETRA TECH COMPANY
Texas PE Firm Reg. #F-929
575 N. Dairy Ashford, Suite 700,
Houston, Texas 77079
T +1 281 589 7257
E usinfrastructure@rpsgroup.com

ENGINEER'S SEAL

SURVEYED BY: KUO Inc.
FB NO. F-4578

CITY OF HOUSTON

HOUSTON PUBLIC WORKS

RECONSTRUCTION & REHABILITATION
COH LIFT STATIONS

FIRMETTE – HEATHER RIDGE LS – 28
HR-FC-1

WBS NUMBER	FOR CITY OF HOUSTON USE ONLY
R-000267-0178-3	
DRAWING SCALE	
AS NOTED	
CITY OF HOUSTON PM	
TAHA LOTIA	
SHEET NO. 231 OF 268	

PLOTTED: 3/30/2026 5:12 PM
PLOT STYLE: Coh_ctb_230809.ctb
FILE NAME: FIRMETTE – HEATHER RIDGE LS.dwg

PLOTTED: 3/30/2026 5:12 PM
PLOT STYLE: Coh_ctb_230809.ctb
FILE NAME: EXISTING SITE PLAN – HEATHER RIDGE LS.dwg

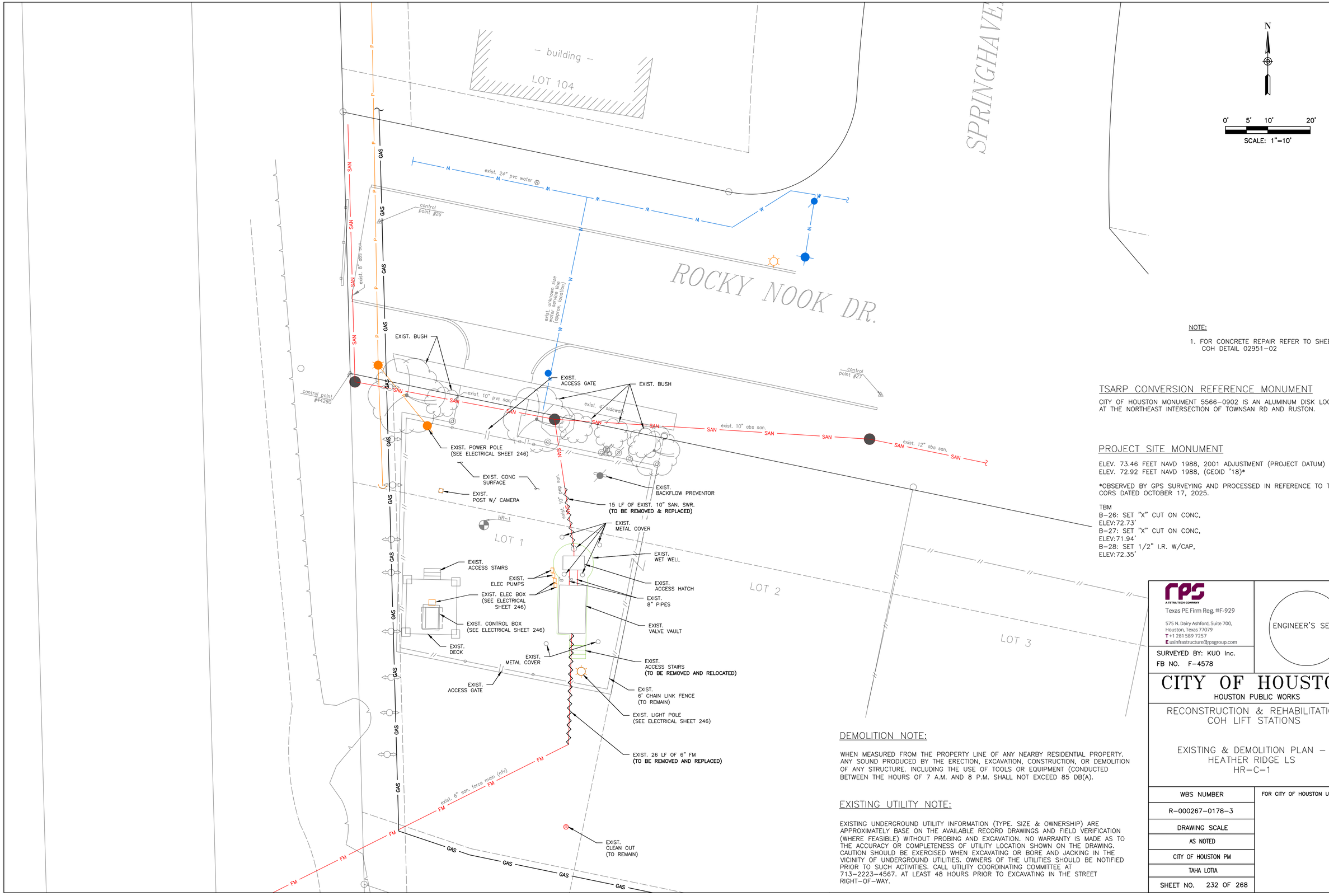

NOTE:

1. FOR CONCRETE REPAIR REFER TO SHEET 26 COH DETAIL 02951–02

TSARP CONVERSION REFERENCE MONUMENT

CITY OF HOUSTON MONUMENT 5566–0902 IS AN ALUMINUM DISK LOCATED AT THE NORTHEAST INTERSECTION OF TOWNSAN RD AND RUSTON.

PROJECT SITE MONUMENT

ELEV. 73.46 FEET NAVD 1988, 2001 ADJUSTMENT (PROJECT DATUM)
ELEV. 72.92 FEET NAVD 1988, (GEOID '18)*

*OBSERVED BY GPS SURVEYING AND PROCESSED IN REFERENCE TO THE CORS DATED OCTOBER 17, 2025.

TBM
B–26: SET "X" CUT ON CONC, ELEV:72.73'
B–27: SET "X" CUT ON CONC, ELEV:71.94'
B–28: SET 1/2" I.R. W/CAP, ELEV:72.35'

DEMOLITION NOTE:

WHEN MEASURED FROM THE PROPERTY LINE OF ANY NEARBY RESIDENTIAL PROPERTY. ANY SOUND PRODUCED BY THE ERECTION, EXCAVATION, CONSTRUCTION, OR DEMOLITION OF ANY STRUCTURE. INCLUDING THE USE OF TOOLS OR EQUIPMENT (CONDUCTED BETWEEN THE HOURS OF 7 A.M. AND 8 P.M. SHALL NOT EXCEED 85 DB(A).

EXISTING UTILITY NOTE:

EXISTING UNDERGROUND UTILITY INFORMATION (TYPE. SIZE & OWNERSHIP) ARE APPROXIMATELY BASE ON THE AVAILABLE RECORD DRAWINGS AND FIELD VERIFICATION (WHERE FEASIBLE) WITHOUT PROBING AND EXCAVATION. NO WARRANTY IS MADE AS TO THE ACCURACY OR COMPLETENESS OF UTILITY LOCATION SHOWN ON THE DRAWING. CAUTION SHOULD BE EXERCISED WHEN EXCAVATING OR BORE AND JACKING IN THE VICINITY OF UNDERGROUND UTILITIES. OWNERS OF THE UTILITIES SHOULD BE NOTIFIED PRIOR TO SUCH ACTIVITIES. CALL UTILITY COORDINATING COMMITTEE AT 713–2223–4567. AT LEAST 48 HOURS PRIOR TO EXCAVATING IN THE STREET RIGHT–OF–WAY.

RPS
A TETRA TECH COMPANY
Texas PE Firm Reg. #F-929
575 N. Dairy Ashford, Suite 700,
Houston, Texas 77079
T +1 281 589 7257
E usinfrastructure@rpsgroup.com

ENGINEER'S SEAL

SURVEYED BY: KUO Inc.
FB NO. F–4578

CITY OF HOUSTON
HOUSTON PUBLIC WORKS

RECONSTRUCTION & REHABILITATION
COH LIFT STATIONS

EXISTING & DEMOLITION PLAN –
HEATHER RIDGE LS
HR–C–1

WBS NUMBER	FOR CITY OF HOUSTON USE ONLY
R–000267–0178–3	
DRAWING SCALE	
AS NOTED	
CITY OF HOUSTON PM	
TAHA LOTIA	
SHEET NO. 232 OF 268	

PLOTTED: 3/30/2026 5:12 PM
PLOT STYLE: Coh_ctb_230809.ctb
FILE NAME: PROPOSED SITE PLAN – HEATHER RIDGE LS.dwg

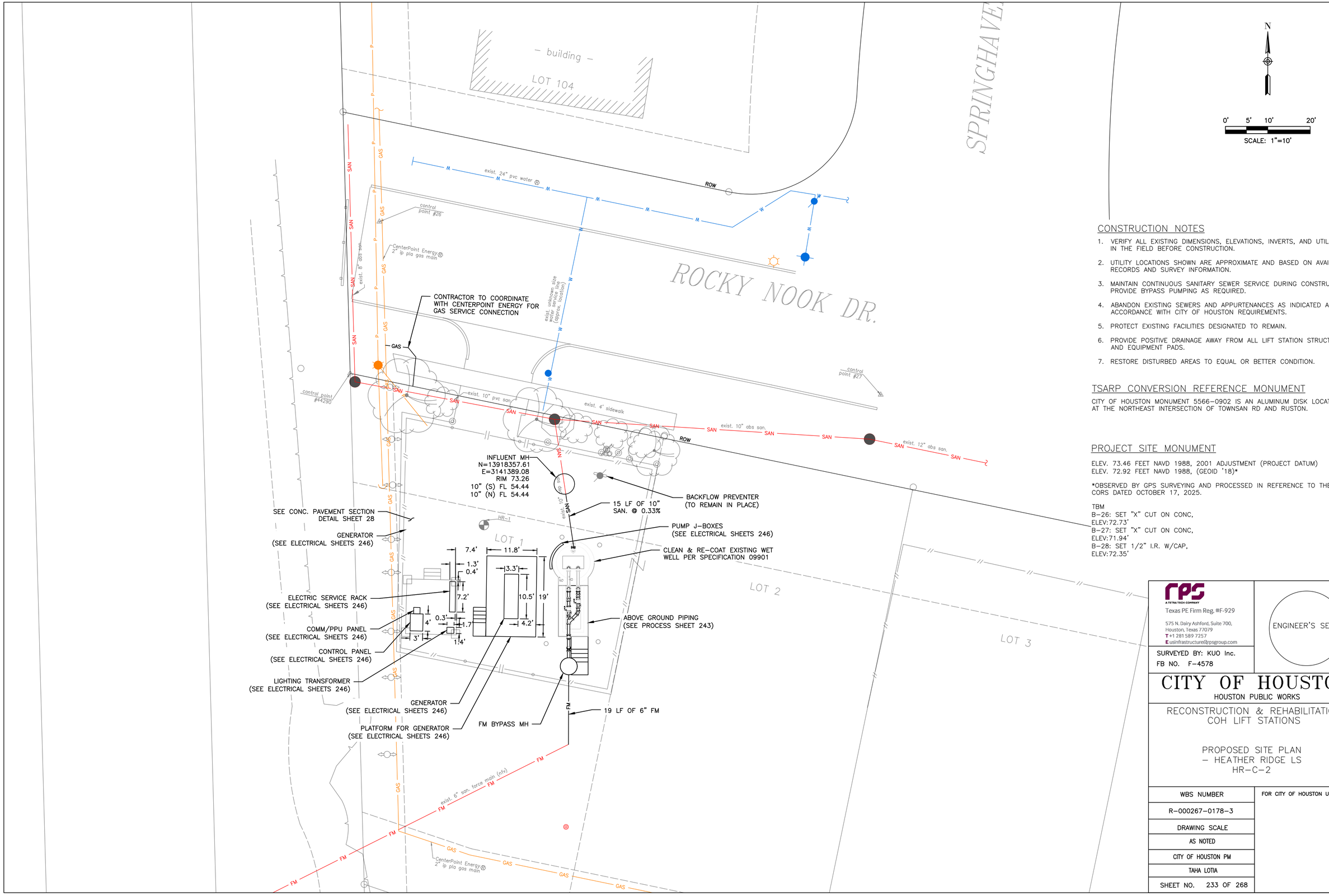

CONSTRUCTION NOTES

1. VERIFY ALL EXISTING DIMENSIONS, ELEVATIONS, INVERTS, AND UTILITIES IN THE FIELD BEFORE CONSTRUCTION.
2. UTILITY LOCATIONS SHOWN ARE APPROXIMATE AND BASED ON AVAILABLE RECORDS AND SURVEY INFORMATION.
3. MAINTAIN CONTINUOUS SANITARY SEWER SERVICE DURING CONSTRUCTION; PROVIDE BYPASS PUMPING AS REQUIRED.
4. ABANDON EXISTING SEWERS AND APPURTENANCES AS INDICATED AND IN ACCORDANCE WITH CITY OF HOUSTON REQUIREMENTS.
5. PROTECT EXISTING FACILITIES DESIGNATED TO REMAIN.
6. PROVIDE POSITIVE DRAINAGE AWAY FROM ALL LIFT STATION STRUCTURES AND EQUIPMENT PADS.
7. RESTORE DISTURBED AREAS TO EQUAL OR BETTER CONDITION.

TSARP CONVERSION REFERENCE MONUMENT

CITY OF HOUSTON MONUMENT 5566-0902 IS AN ALUMINUM DISK LOCATED AT THE NORTHEAST INTERSECTION OF TOWNSAN RD AND RUSTON.

PROJECT SITE MONUMENT

ELEV. 73.46 FEET NAVD 1988, 2001 ADJUSTMENT (PROJECT DATUM)
ELEV. 72.92 FEET NAVD 1988, (GEOID '18)*

*OBSERVED BY GPS SURVEYING AND PROCESSED IN REFERENCE TO THE CORS DATED OCTOBER 17, 2025.

TBM
B-26: SET "X" CUT ON CONC,
ELEV:72.73'
B-27: SET "X" CUT ON CONC,
ELEV:71.94'
B-28: SET 1/2" I.R. W/CAP,
ELEV:72.35'

RPS
A TETRA TECH COMPANY
Texas PE Firm Reg. #F-929
575 N. Dairy Ashford, Suite 700,
Houston, Texas 77079
T +1 281 589 7257
E usinfrastructure@rpsgroup.com

SURVEYED BY: KUO Inc.
FB NO. F-4578

ENGINEER'S SEAL

CITY OF HOUSTON
HOUSTON PUBLIC WORKS

RECONSTRUCTION & REHABILITATION
COH LIFT STATIONS

PROPOSED SITE PLAN
– HEATHER RIDGE LS
HR-C-2

WBS NUMBER	FOR CITY OF HOUSTON USE ONLY
R-000267-0178-3	
DRAWING SCALE	
AS NOTED	
CITY OF HOUSTON PM	
TAHA LOTIA	
SHEET NO. 233 OF 268	

PLOTTED: 3/30/2026 5:12 PM
PLOT STYLE: Coh_ctb_230809.ctb
FILE NAME: PROP. GRADING - STORM SEWER AND UTILITY PLAN - HEATHER RIDGE LS.dwg

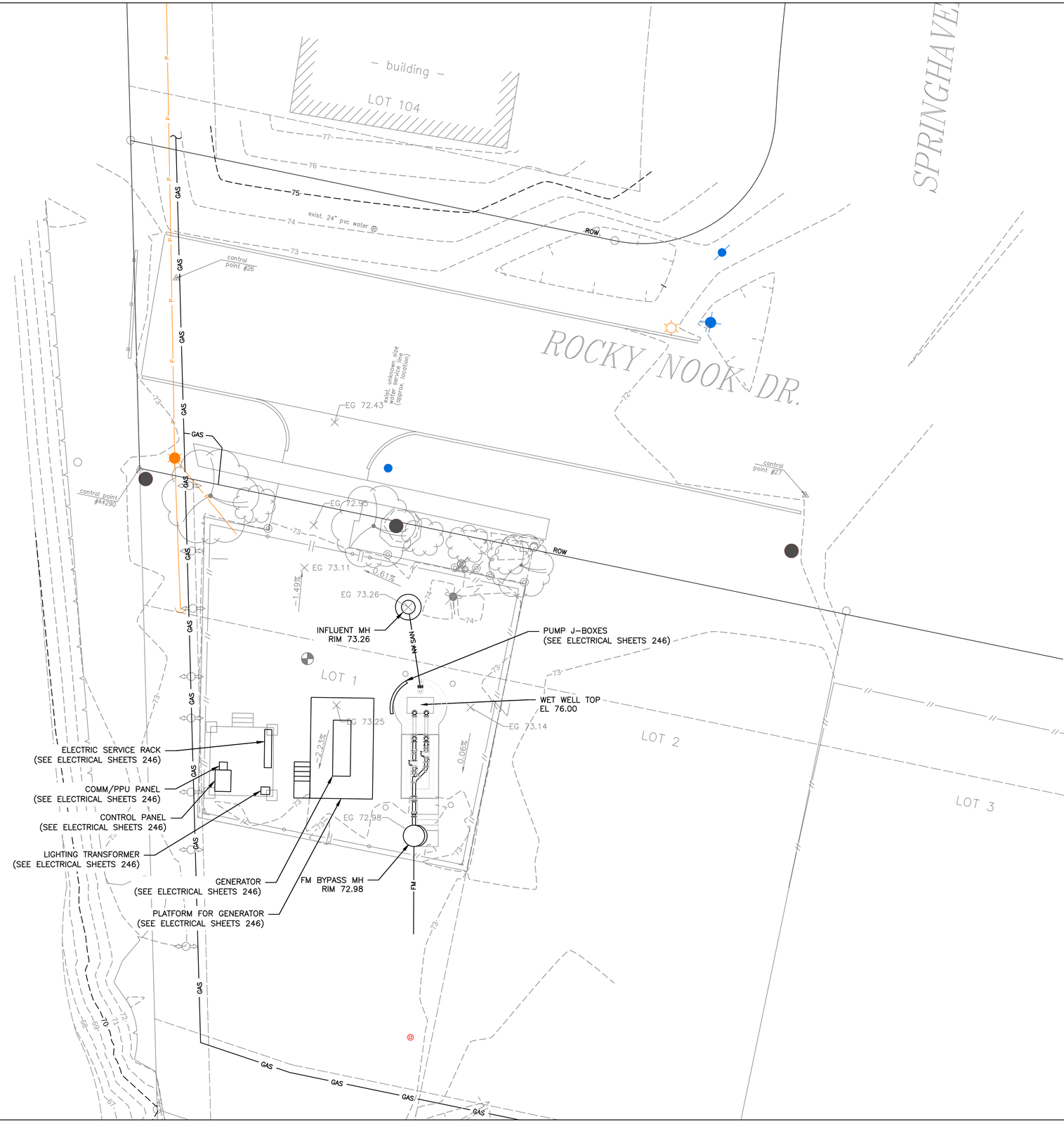

N

0' 5' 10' 20'

SCALE: 1"=10'

NOTES:
1. CONTRACTOR TO MAINTAIN POSITIVE DRAINAGE.

LEGEND	
EG XX.XX	EXISTING GRADE
FG XX.XX	FINISHED GRADE
TC XX.XX	TOP OF CONCRETE
XX.XX%	FLOW DIRECTION

TSARP CONVERSION REFERENCE MONUMENT

CITY OF HOUSTON MONUMENT 5566-0902 IS AN ALUMINUM DISK LOCATED AT THE NORTHEAST INTERSECTION OF TOWNSAN RD AND RUSTON.

PROJECT SITE MONUMENT

ELEV. 73.46 FEET NAVD 1988, 2001 ADJUSTMENT (PROJECT DATUM)
ELEV. 72.92 FEET NAVD 1988, (GEOID '18)*

*OBSERVED BY GPS SURVEYING AND PROCESSED IN REFERENCE TO THE CORS DATED OCTOBER 17, 2025.

TBM
B-26: SET "X" CUT ON CONC,
ELEV:72.73'
B-27: SET "X" CUT ON CONC,
ELEV:71.94'
B-28: SET 1/2" I.R. W/CAP,
ELEV:72.35'

rps
A TETRA TECH COMPANY
Texas PE Firm Reg. #F-929
575 N. Dairy Ashford, Suite 700,
Houston, Texas 77079
T +1 281 589 7257
E usinfrastructure@rpsgroup.com

SURVEYED BY: KUO Inc.
FB NO. F-4578

ENGINEER'S SEAL

CITY OF HOUSTON
HOUSTON PUBLIC WORKS

RECONSTRUCTION & REHABILITATION
COH LIFT STATIONS

PROPOSED GRADING -
HEATHER RIDGE LS
HR-C-3

WBS NUMBER	FOR CITY OF HOUSTON USE ONLY
R-000267-0178-3	
DRAWING SCALE	
AS NOTED	
CITY OF HOUSTON PM	
TAHA LOTIA	
SHEET NO. 234 OF 268	

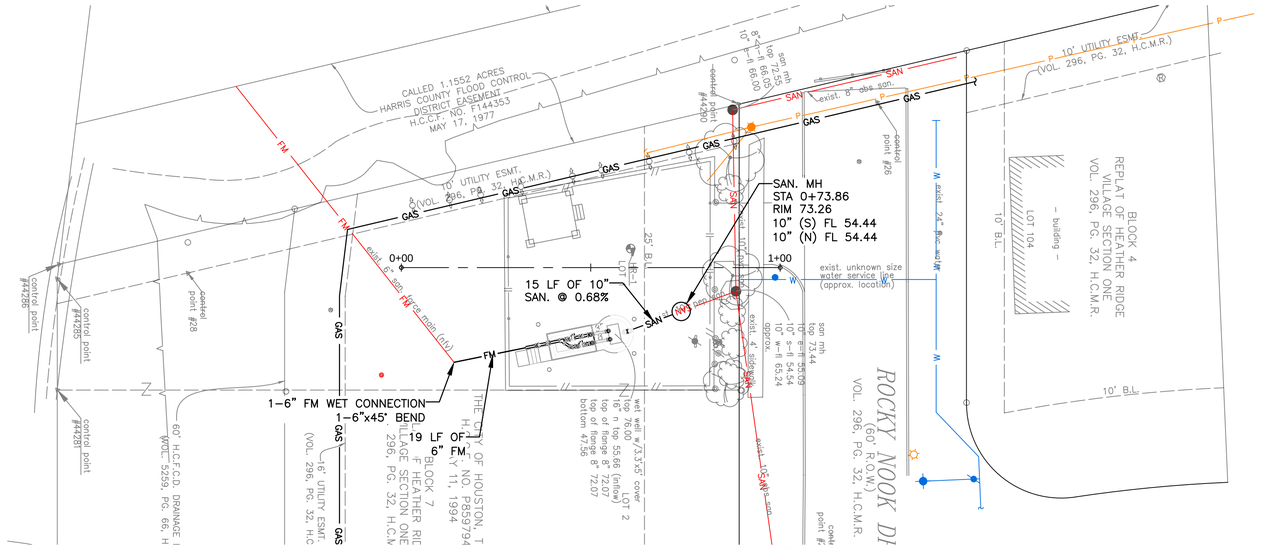

0' 10' 20' 40'
H SCALE: 1"=20'

0' 1' 2' 4'
V SCALE: 1"=2'

RPS
A TETRA TECH COMPANY
Texas PE Firm Reg. #F-929
575 N. Dairy Ashford, Suite 700,
Houston, Texas 77079
T +1 281 589 7257
E usinfrastructure@rpsgroup.com

SURVEYED BY: KUO Inc.
FB NO. F-4578

ENGINEER'S SEAL

CITY OF HOUSTON
HOUSTON PUBLIC WORKS

RECONSTRUCTION & REHABILITATION
COH LIFT STATIONS

PLAN & PROFILE –
HEATHER RIDGE LS
HR-C-4

WBS NUMBER	FOR CITY OF HOUSTON USE ONLY
R-000267-0178-3	
DRAWING SCALE	
AS NOTED	
CITY OF HOUSTON PM	
TAHA LOTIA	
SHEET NO. 235 OF 268	

PLOTTED: 3/30/2026 5:12 PM
PLOT STYLE: Coh_ctb_230809.ctb
FILE NAME: PLAN & PROFILE - HEATHER RIDGE LS.dwg

PLOTTED: 3/30/2026 5:12 PM
PLOT STYLE: Coh_ctb_230809.ctb
FILE NAME: SWPPP - HEATHER RIDGE LS.dwg

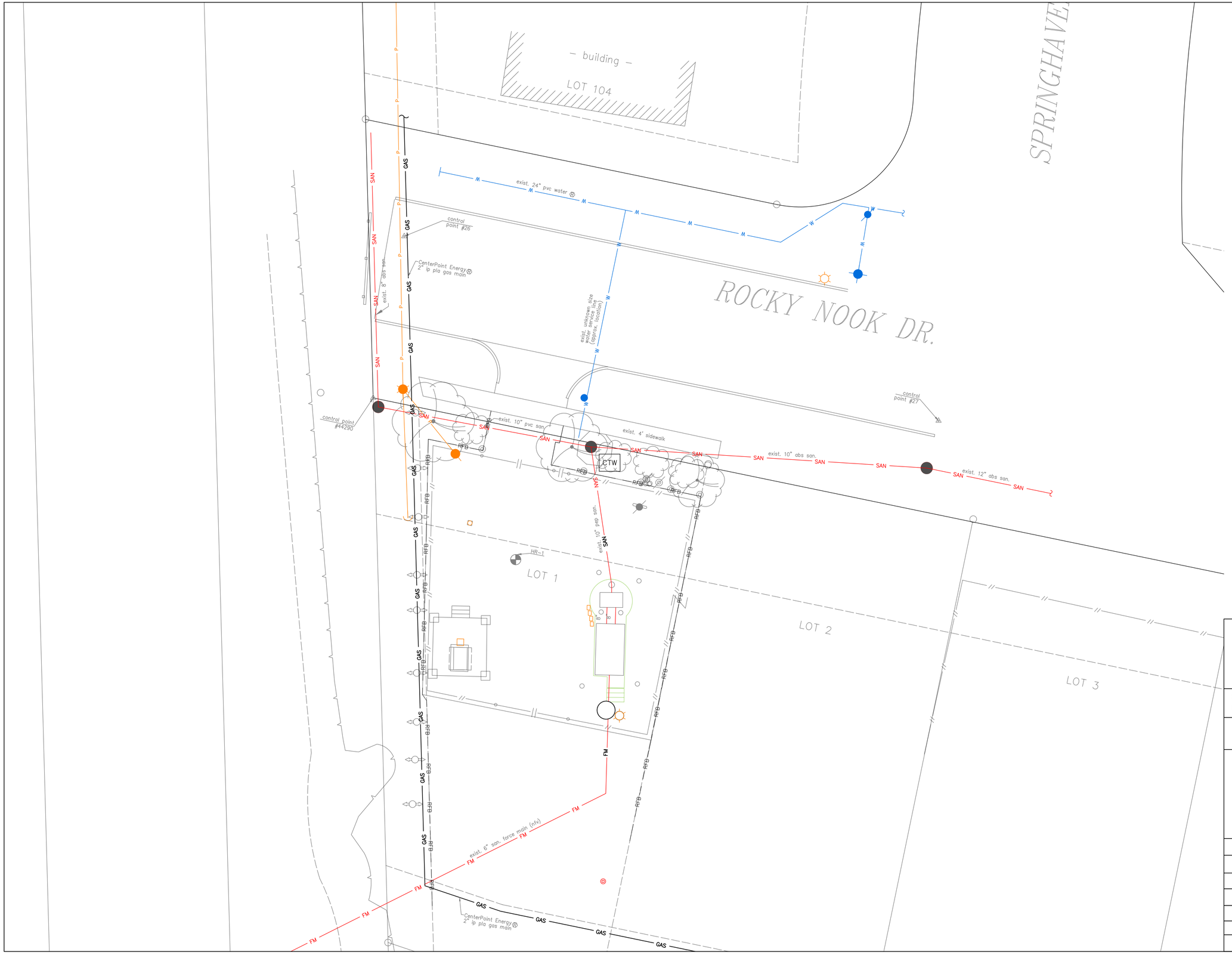

N

0' 5' 10' 20'

SCALE: 1"=10'

LEGEND

- REINFORCED FILTER FABRIC BARRIER (RFB)
- INLET PROTECTION BARRIER (IPB)
- STABILIZED CONSTRUCTION ACCESS (SCA)
- CONCRETE TRUCK WASHOUT AREA (CTW)

A TETRA TECH COMPANY
Texas PE Firm Reg. #F-929
575 N. Dairy Ashford, Suite 700,
Houston, Texas 77079
T +1 281 589 7257
E usinfrastructure@rpsgroup.com

SURVEYED BY: KUO Inc.
FB NO. F-4578

ENGINEER'S SEAL

CITY OF HOUSTON
HOUSTON PUBLIC WORKS

RECONSTRUCTION & REHABILITATION
COH LIFT STATIONS

SWPPP – HEATHER RIDGE LS
HR-C-5

WBS NUMBER	FOR CITY OF HOUSTON USE ONLY
R-000267-0178-3	
DRAWING SCALE	
AS NOTED	
CITY OF HOUSTON PM	
TAHA LOTIA	
SHEET NO. 236 OF 268	

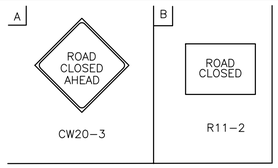

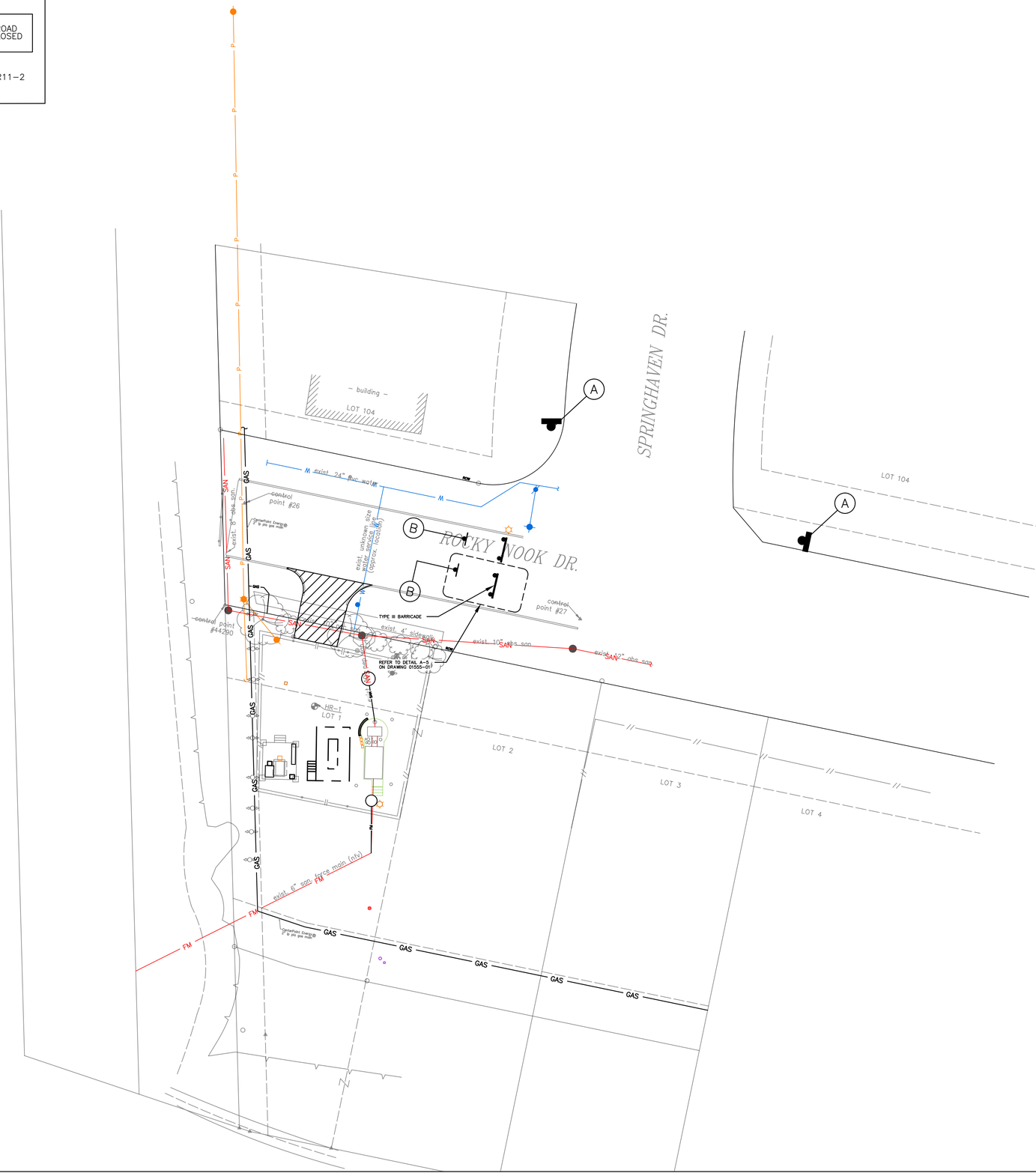

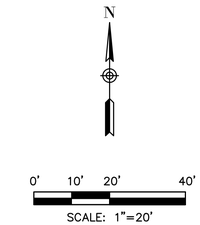

RPS
A TETRA TECH COMPANY
Texas PE Firm Reg. #F-929
575 N. Dairy Ashford, Suite 700,
Houston, Texas 77079
T +1 281 589 7257
E usinfrastructure@rpsgroup.com

SURVEYED BY: KUO Inc.
FB NO. F-4578

ENGINEER'S SEAL

CITY OF HOUSTON
HOUSTON PUBLIC WORKS

RECONSTRUCTION & REHABILITATION
COH LIFT STATIONS

TRAFFIC CONTROL PLAN –
HEATHER RIDGE
HR-C-6

WBS NUMBER	FOR CITY OF HOUSTON USE ONLY
R-000267-0178-3	
DRAWING SCALE	
AS NOTED	
CITY OF HOUSTON PM	
TAHA LOTIA	
SHEET NO. 237 OF 268	

PLOTTED: 3/30/2026 5:12 PM
PLOT STYLE: Coh_ctb_230809.ctb
FILE NAME: TCP_HEATHER RIDGE.dwg

PLOT STYLE: Coh_ctb_230809.ctb

PLOTTED: 3/30/2026 5:13 PM

FILE NAME: TPP_HEATHER RIDGE LS.dwg

RPS
A TETRA TECH COMPANY
Texas PE Firm Reg. #F-929
575 N. Dairy Ashford, Suite 700,
Houston, Texas 77079
T +1 281 589 7257
E usinfrastructure@rpsgroup.com

ENGINEER'S SEAL

SURVEYED BY: KUO Inc.

FB NO. F-4578

CITY OF HOUSTON

HOUSTON PUBLIC WORKS

RECONSTRUCTION & REHABILITATION
COH LIFT STATIONS

TREE PROTECTION PLAN –
HEATHER RIDGE
HR-C-7

WBS NUMBER	FOR CITY OF HOUSTON USE ONLY
R-000267-0178-3	
DRAWING SCALE	
AS NOTED	
CITY OF HOUSTON PM	
TAHA LOTIA	
SHEET NO. 238 OF 268	

PLOTTED: 3/30/2026 5:13 PM

PLOT STYLE: Coh_ctb_230809.ctb

FILE NAME: MECH_HEATHER RIDGE LS.dwg

Texas PE Firm Reg. #F-929

575 N. Dairy Ashford, Suite 700,
Houston, Texas 77079
T +1 281 589 7257
E usinfrastructure@rpsgroup.com

ENGINEER'S SEAL

SURVEYED BY: KUO Inc.

FB NO. F-4578

CITY OF HOUSTON

HOUSTON PUBLIC WORKS

RECONSTRUCTION & REHABILITATION
COH LIFT STATIONS

HEATHER RIDGE LS MECHANICAL
PLANS AND SECTION
HR-M-1

WBS NUMBER	FOR CITY OF HOUSTON USE ONLY
R-000267-0178-3	
DRAWING SCALE	
AS NOTED	
CITY OF HOUSTON PM	
TAHA LOTIA	
SHEET NO. 239 OF 268	

PLOT STYLE: Coh_ctb_230809.ctb PLOTTED: 3/30/2026 5:13 PM

FILE NAME: MECH_HEATHER RIDGE LS.dwg

RPS
A TETRA TECH COMPANY
Texas PE Firm Reg. #F-929
575 N. Dairy Ashford, Suite 700,
Houston, Texas 77079
T +1 281 589 7257
E usinfrastructure@rpsgroup.com

ENGINEER'S SEAL

SURVEYED BY: KUO Inc.
FB NO. F-4578

CITY OF HOUSTON
HOUSTON PUBLIC WORKS

RECONSTRUCTION & REHABILITATION
COH LIFT STATIONS

HEATHER RIDGE LS PLUMBING PLAN
HR-P-1

WBS NUMBER	FOR CITY OF HOUSTON USE ONLY
R-000267-0178-3	
DRAWING SCALE	
AS NOTED	
CITY OF HOUSTON PM	
TAHA LOTIA	
SHEET NO. 240 OF 268	

PLOT STYLE: Coh_ctb_230809.ctb PLOTTED: 3/30/2026 5:13 PM

FILE NAME: STRUCT_HEATHER RIDGE LS.dwg

A TETRA TECH COMPANY

Texas PE Firm Reg. #F-929

575 N. Dairy Ashford, Suite 700,
Houston, Texas 77079
T +1 281 589 7257
E usinfrastructure@rpsgroup.com

ENGINEER'S SEAL

SURVEYED BY: KUO Inc.

FB NO. F-4578

CITY OF HOUSTON

HOUSTON PUBLIC WORKS

RECONSTRUCTION & REHABILITATION
COH LIFT STATIONS

HEATHER RIDGE LS STRUCTURAL
DEMOLITION PLAN AND SECTION
HR-S-1

WBS NUMBER	FOR CITY OF HOUSTON USE ONLY
R-000267-0178-3	
DRAWING SCALE	
AS NOTED	
CITY OF HOUSTON PM	
TAHA LOTIA	
SHEET NO. 241 OF 268	

PLOTTED: 3/30/2026 5:13 PM

PLOT STYLE: Coh_ctb_230809.ctb

FILE NAME: STRUCT_HEATHER RIDGE LS.dwg

RPS
A TETRA TECH COMPANY
Texas PE Firm Reg. #F-929
575 N. Dairy Ashford, Suite 700,
Houston, Texas 77079
T +1 281 589 7257
E usinfrastructure@rpsgroup.com

ENGINEER'S SEAL

SURVEYED BY: KUO Inc.

FB NO. F-4578

CITY OF HOUSTON

HOUSTON PUBLIC WORKS

RECONSTRUCTION & REHABILITATION
COH LIFT STATIONS

HEATHER RIDGE LS STRUCTURAL
PLAN AND SECTIONS
HR-S-2

WBS NUMBER	FOR CITY OF HOUSTON USE ONLY
R-000267-0178-3	
DRAWING SCALE	
AS NOTED	
CITY OF HOUSTON PM	
TAHA LOTIA	
SHEET NO. 242 OF 268	

PLOTTED: 3/30/2026 5:13 PM

PLOT STYLE: Coh_ctb_230809.ctb

FILE NAME: DEMO_HEATHER RIDGE LS.dwg

A TETRA TECH COMPANY

Texas PE Firm Reg. #F-929

575 N. Dairy Ashford, Suite 700,
Houston, Texas 77079
T +1 281 589 7257
E usinfrastructure@rpsgroup.com

ENGINEER'S SEAL

SURVEYED BY: KUO Inc.

FB NO. F-4578

CITY OF HOUSTON

HOUSTON PUBLIC WORKS

RECONSTRUCTION & REHABILITATION
COH LIFT STATIONS

HEATHER RIDGE LS DEMOLITION PLAN
HR-D-1

WBS NUMBER	FOR CITY OF HOUSTON USE ONLY
R-000267-0178-3	
DRAWING SCALE	
AS NOTED	
CITY OF HOUSTON PM	
TAHA LOTIA	
SHEET NO. 243 OF 268	

PLOTTED: 3/30/2026 5:13 PM

PLOT STYLE: Coh_ctb_230809.ctb

FILE NAME: DEMO_HEATHER RIDGE LS.dwg

A TETRA TECH COMPANY

Texas PE Firm Reg. #F-929

575 N. Dairy Ashford, Suite 700,
Houston, Texas 77079
T +1 281 589 7257
E usinfrastructure@rpsgroup.com

ENGINEER'S SEAL

SURVEYED BY: KUO Inc.

FB NO. F-4578

CITY OF HOUSTON

HOUSTON PUBLIC WORKS

RECONSTRUCTION & REHABILITATION
COH LIFT STATIONS

HEATHER RIDGE PLAN VIEW
HR-D-2

WBS NUMBER	FOR CITY OF HOUSTON USE ONLY
R-000267-0178-3	
DRAWING SCALE	
AS NOTED	
CITY OF HOUSTON PM	
TAHA LOTIA	
SHEET NO. 244 OF 268	

PLOTTED: 3/30/2026 5:13 PM

PLOT STYLE: Coh_ctb_230809.ctb

FILE NAME: DEMO_HEATHER RIDGE LS.dwg

Texas PE Firm Reg. #F-929

575 N. Dairy Ashford, Suite 700,
Houston, Texas 77079
T +1 281 589 7257
E usinfrastructure@rpsgroup.com

ENGINEER'S SEAL

SURVEYED BY: KUO Inc.

FB NO. F-4578

CITY OF HOUSTON

HOUSTON PUBLIC WORKS

RECONSTRUCTION & REHABILITATION
COH LIFT STATIONS

HEATHER RIDGE SECTIONS VIEW
HR-D-3

WBS NUMBER	FOR CITY OF HOUSTON USE ONLY
R-000267-0178-3	
DRAWING SCALE	
AS NOTED	
CITY OF HOUSTON PM	
TAHA LOTIA	
SHEET NO. 245 OF 268	

PLOT STYLE: Coh_ctb_230809.ctb

PLOTTED: 3/30/2026 5:13 PM

FILE NAME: ELECT_HEATHER RIDGE LS 1.dwg

A TETRA TECH COMPANY

Texas PE Firm Reg. #F-929

575 N. Dairy Ashford, Suite 700,
Houston, Texas 77079
T +1 281 589 7257
E usinfrastructure@rpsgroup.com

ENGINEER'S SEAL

SURVEYED BY: KUO Inc.

FB NO. F-4578

CITY OF HOUSTON

HOUSTON PUBLIC WORKS

RECONSTRUCTION & REHABILITATION
COH LIFT STATIONS

HEATHER RIDGE LS ELECTRICAL
DEMOLITION SITE PLAN
HR-E-1

WBS NUMBER	FOR CITY OF HOUSTON USE ONLY
R-000267-0178-3	
DRAWING SCALE	
AS NOTED	
CITY OF HOUSTON PM	
TAHA LOTIA	
SHEET NO. 246 OF 268	

PLOTTED: 3/30/2026 5:13 PM

PLOT STYLE: Coh_ctb_230809.ctb

FILE NAME: ELECT_HEATHER RIDGE LS 1.dwg

A TETRA TECH COMPANY

Texas PE Firm Reg. #F-929

575 N. Dairy Ashford, Suite 700,
Houston, Texas 77079
T +1 281 589 7257
E usinfrastructure@rpsgroup.com

ENGINEER'S SEAL

SURVEYED BY: KUO Inc.

FB NO. F-4578

CITY OF HOUSTON

HOUSTON PUBLIC WORKS

RECONSTRUCTION & REHABILITATION
COH LIFT STATIONS

HEATHER RIDGE LS ELECTRICAL
PROPOSED SITE PLAN

WBS NUMBER	FOR CITY OF HOUSTON USE ONLY
R-000267-0178-3	
DRAWING SCALE	
AS NOTED	
CITY OF HOUSTON PM	
TAHA LOTIA	
SHEET NO. 247 OF 268	

PLOT STYLE: Coh_ctb_230809.ctb

PLOTTED: 3/30/2026 5:13 PM

FILE NAME: ELECT_HEATHER RIDGE LS 1.dwg

RPS
A TETRA TECH COMPANY
Texas PE Firm Reg. #F-929
575 N. Dairy Ashford, Suite 700,
Houston, Texas 77079
T +1 281 589 7257
E usinfrastructure@rpsgroup.com

ENGINEER'S SEAL

SURVEYED BY: KUO Inc.

FB NO. F-4578

CITY OF HOUSTON

HOUSTON PUBLIC WORKS

RECONSTRUCTION & REHABILITATION
COH LIFT STATIONS

HEATHER RIDGE LS ELECTRICAL SINGLE LINE DIAGRAM

WBS NUMBER	FOR CITY OF HOUSTON USE ONLY
R-000267-0178-3	
DRAWING SCALE	
AS NOTED	
CITY OF HOUSTON PM	
TAHA LOTIA	
SHEET NO. 248 OF 268	

PLOTTED: 3/30/2026 5:13 PM

PLOT STYLE: Coh_ctb_230809.ctb

FILE NAME: ELECT_HEATHER RIDGE LS 1.dwg

A TETRA TECH COMPANY

Texas PE Firm Reg. #F-929

575 N. Dairy Ashford, Suite 700,
Houston, Texas 77079
T +1 281 589 7257
E usinfrastructure@rpsgroup.com

ENGINEER'S SEAL

SURVEYED BY: KUO Inc.

FB NO. F-4578

CITY OF HOUSTON

HOUSTON PUBLIC WORKS

RECONSTRUCTION & REHABILITATION
COH LIFT STATIONS

HEATHER RIDGE LS ELECTRICAL
THREE LINE DIAGRAM

WBS NUMBER	FOR CITY OF HOUSTON USE ONLY
R-000267-0178-3	
DRAWING SCALE	
AS NOTED	
CITY OF HOUSTON PM	
TAHA LOTIA	
SHEET NO. 249 OF 268	

PLOTTED: 3/30/2026 5:14 PM

PLOT STYLE: Coh_ctb_230809.ctb

FILE NAME: ELECT_HEATHER RIDGE LS 1.dwg

A TETRA TECH COMPANY

Texas PE Firm Reg. #F-929

575 N. Dairy Ashford, Suite 700,
Houston, Texas 77079
T +1 281 589 7257
E usinfrastructure@rpsgroup.com

ENGINEER'S SEAL

SURVEYED BY: KUO Inc.

FB NO. F-4578

CITY OF HOUSTON

HOUSTON PUBLIC WORKS

RECONSTRUCTION & REHABILITATION
COH LIFT STATIONS

HEATHER RIDGE LS PROPOSED ELECTRICAL PLATFORM LAYOUT

WBS NUMBER	FOR CITY OF HOUSTON USE ONLY
R-000267-0178-3	
DRAWING SCALE	
AS NOTED	
CITY OF HOUSTON PM	
TAHA LOTIA	
SHEET NO. 250 OF 268	

PLOTTED: 3/30/2026 5:14 PM

PLOT STYLE: Coh_ctb_230809.ctb

FILE NAME: ELECT_HEATHER RIDGE LS 1.dwg

RPS
A TETRA TECH COMPANY
Texas PE Firm Reg. #F-929
575 N. Dairy Ashford, Suite 700,
Houston, Texas 77079
T +1 281 589 7257
E usinfrastructure@rpsgroup.com

SURVEYED BY: KUO Inc.

FB NO. F-4578

ENGINEER'S SEAL

CITY OF HOUSTON

HOUSTON PUBLIC WORKS

RECONSTRUCTION & REHABILITATION
COH LIFT STATIONS

HEATHER RIDGE LS CONTROL CABINET ENCLOSURE DETAIL

WBS NUMBER	FOR CITY OF HOUSTON USE ONLY
R-000267-0178-3	
DRAWING SCALE	
AS NOTED	
CITY OF HOUSTON PM	
TAHA LOTIA	
SHEET NO. 251 OF 268	

PLOTTED: 3/30/2026 5:14 PM

PLOT STYLE: Coh_ctb_230809.ctb

FILE NAME: ELECT_HEATHER RIDGE LS 1.dwg

RPS
A TETRA TECH COMPANY
Texas PE Firm Reg. #F-929
575 N. Dairy Ashford, Suite 700,
Houston, Texas 77079
T +1 281 589 7257
E usinfrastructure@rpsgroup.com

SURVEYED BY: KUO Inc.

FB NO. F-4578

ENGINEER'S SEAL

CITY OF HOUSTON

HOUSTON PUBLIC WORKS

RECONSTRUCTION & REHABILITATION
COH LIFT STATIONS

HEATHER RIDGE LS ELECTRICAL SERVICE RACK DETAIL

WBS NUMBER	FOR CITY OF HOUSTON USE ONLY
R-000267-0178-3	
DRAWING SCALE	
AS NOTED	
CITY OF HOUSTON PM	
TAHA LOTIA	
SHEET NO. 252 OF 268	

PLOTTED: 3/30/2026 5:14 PM

PLOT STYLE: Coh_ctb_230809.ctb

FILE NAME: ELECT_HEATHER RIDGE LS 1.dwg

A TETRA TECH COMPANY

Texas PE Firm Reg. #F-929

575 N. Dairy Ashford, Suite 700,
Houston, Texas 77079
T +1 281 589 7257
E usinfrastructure@rpsgroup.com

ENGINEER'S SEAL

SURVEYED BY: KUO Inc.

FB NO. F-4578

CITY OF HOUSTON

HOUSTON PUBLIC WORKS

RECONSTRUCTION & REHABILITATION
COH LIFT STATIONS

HEATHER RIDGE LS ELECTRICAL JUNCTION BOX DETAIL

WBS NUMBER	FOR CITY OF HOUSTON USE ONLY
R-000267-0178-3	
DRAWING SCALE	
AS NOTED	
CITY OF HOUSTON PM	
TAHA LOTIA	
SHEET NO. 253 OF 268	

PLOTTED: 3/30/2026 5:14 PM

PLOT STYLE: Coh_ctb_230809.ctb

FILE NAME: ELECT_HEATHER RIDGE LS 1.dwg

A TETRA TECH COMPANY

Texas PE Firm Reg. #F-929

575 N. Dairy Ashford, Suite 700,
Houston, Texas 77079
T +1 281 589 7257
E usinfrastructure@rpsgroup.com

ENGINEER'S SEAL

SURVEYED BY: KUO Inc.

FB NO. F-4578

CITY OF HOUSTON

HOUSTON PUBLIC WORKS

RECONSTRUCTION & REHABILITATION
COH LIFT STATIONS

HEATHER RIDGE LS ELECTRICAL
SERVICE POLE DETAIL

WBS NUMBER	FOR CITY OF HOUSTON USE ONLY
R-000267-0178-3	
DRAWING SCALE	
AS NOTED	
CITY OF HOUSTON PM	
TAHA LOTIA	
SHEET NO. 254 OF 268	

PLOTTED: 3/30/2026 5:14 PM

PLOT STYLE: Coh_ctb_230809.ctb

FILE NAME: ELECT_HEATHER RIDGE LS 1.dwg

A TETRA TECH COMPANY

Texas PE Firm Reg. #F-929

575 N. Dairy Ashford, Suite 700,
Houston, Texas 77079
T +1 281 589 7257
E usinfrastructure@rpsgroup.com

ENGINEER'S SEAL

SURVEYED BY: KUO Inc.

FB NO. F-4578

CITY OF HOUSTON

HOUSTON PUBLIC WORKS

RECONSTRUCTION & REHABILITATION
COH LIFT STATIONS

HEATHER RIDGE LS ELECTRICAL CONDUIT SCHEDULE

WBS NUMBER	FOR CITY OF HOUSTON USE ONLY
R-000267-0178-3	
DRAWING SCALE	
AS NOTED	
CITY OF HOUSTON PM	
TAHA LOTIA	
SHEET NO. 255 OF 268	

PLOT STYLE: Coh_ctb_230809.ctb PLOTTED: 3/30/2026 5:14 PM

FILE NAME: ELECT_HEATHER RIDGE LS 1.dwg

A TETRA TECH COMPANY

Texas PE Firm Reg. #F-929

575 N. Dairy Ashford, Suite 700,
Houston, Texas 77079
T +1 281 589 7257
E usinfrastructure@rpsgroup.com

ENGINEER'S SEAL

SURVEYED BY: KUO Inc.

FB NO. F-4578

CITY OF HOUSTON

HOUSTON PUBLIC WORKS

RECONSTRUCTION & REHABILITATION
COH LIFT STATIONS

HEATHER RIDGE LS PROCESS &
INSTRUMENTATION DIAGRAM – I

WBS NUMBER	FOR CITY OF HOUSTON USE ONLY
R-000267-0178-3	
DRAWING SCALE	
AS NOTED	
CITY OF HOUSTON PM	
TAHA LOTIA	
SHEET NO. 256 OF 268	

PLOT STYLE: Coh_ctb_230809.ctb PLOTTED: 3/30/2026 5:14 PM

FILE NAME: ELECT_HEATHER RIDGE LS 2.dwg

RPS
A TETRA TECH COMPANY
Texas PE Firm Reg. #F-929
575 N. Dairy Ashford, Suite 700,
Houston, Texas 77079
T +1 281 589 7257
E usinfrastructure@rpsgroup.com

ENGINEER'S SEAL

SURVEYED BY: KUO Inc.
FB NO. F-4578

CITY OF HOUSTON
HOUSTON PUBLIC WORKS

RECONSTRUCTION & REHABILITATION
COH LIFT STATIONS

HEATHER RIDGE LS PROCESS & INSTRUMENTATION DIAGRAM – II

WBS NUMBER	FOR CITY OF HOUSTON USE ONLY
R-000267-0178-3	
DRAWING SCALE	
AS NOTED	
CITY OF HOUSTON PM	
TAHA LOTIA	
SHEET NO. 257 OF 268	

PLOT STYLE: Coh_ctb_230809.ctb

PLOTTED: 3/30/2026 5:14 PM

FILE NAME: ELECT_HEATHER RIDGE LS 2.dwg

A TETRA TECH COMPANY

Texas PE Firm Reg. #F-929

575 N. Dairy Ashford, Suite 700,
Houston, Texas 77079
T +1 281 589 7257
E usinfrastructure@rpsgroup.com

ENGINEER'S SEAL

SURVEYED BY: KUO Inc.

FB NO. F-4578

CITY OF HOUSTON

HOUSTON PUBLIC WORKS

RECONSTRUCTION & REHABILITATION
COH LIFT STATIONS

HEATHER RIDGE LS
COMMUNICATIONS DIAGRAM

WBS NUMBER	FOR CITY OF HOUSTON USE ONLY
R-000267-0178-3	
DRAWING SCALE	
AS NOTED	
CITY OF HOUSTON PM	
TAHA LOTIA	
SHEET NO. 258 OF 268	

PLOTTED: 3/30/2026 5:14 PM

PLOT STYLE: Coh_ctb_230809.ctb

FILE NAME: ELECT_HEATHER RIDGE LS 2.dwg

RPS
A TETRA TECH COMPANY
Texas PE Firm Reg. #F-929
575 N. Dairy Ashford, Suite 700,
Houston, Texas 77079
T +1 281 589 7257
E usinfrastructure@rpsgroup.com

SURVEYED BY: KUO Inc.

FB NO. F-4578

ENGINEER'S SEAL

CITY OF HOUSTON

HOUSTON PUBLIC WORKS

RECONSTRUCTION & REHABILITATION
COH LIFT STATIONS

HEATHER RIDGE LS CONTROL CABINET EQUIP. LAYOUT & SCHEDULE

WBS NUMBER	FOR CITY OF HOUSTON USE ONLY
R-000267-0178-3	
DRAWING SCALE	
AS NOTED	
CITY OF HOUSTON PM	
TAHA LOTIA	
SHEET NO. 259 OF 268	

PLOTTED: 3/30/2026 5:14 PM

PLOT STYLE: Coh_ctb_230809.ctb

FILE NAME: ELECT_HEATHER RIDGE LS 2.dwg

A TETRA TECH COMPANY

Texas PE Firm Reg. #F-929

575 N. Dairy Ashford, Suite 700,
Houston, Texas 77079
T +1 281 589 7257
E usinfrastructure@rpsgroup.com

ENGINEER'S SEAL

SURVEYED BY: KUO Inc.

FB NO. F-4578

CITY OF HOUSTON

HOUSTON PUBLIC WORKS

RECONSTRUCTION & REHABILITATION
COH LIFT STATIONS

HEATHER RIDGE LS CONTROL
CABINET EQUIPMENT LAYOUT – I

WBS NUMBER	FOR CITY OF HOUSTON USE ONLY
R-000267-0178-3	
DRAWING SCALE	
AS NOTED	
CITY OF HOUSTON PM	
TAHA LOTIA	
SHEET NO. 260 OF 268	

PLOT STYLE: Coh_ctb_230809.ctb PLOTTED: 3/30/2026 5:14 PM

FILE NAME: ELECT_HEATHER RIDGE LS 2.dwg

A TETRA TECH COMPANY

Texas PE Firm Reg. #F-929

575 N. Dairy Ashford, Suite 700,
Houston, Texas 77079
T +1 281 589 7257
E usinfrastructure@rpsgroup.com

ENGINEER'S SEAL

SURVEYED BY: KUO Inc.

FB NO. F-4578

CITY OF HOUSTON

HOUSTON PUBLIC WORKS

RECONSTRUCTION & REHABILITATION
COH LIFT STATIONS

HEATHER RIDGE LS CONTROL CABINET EQUIPMENT LAYOUT – II

WBS NUMBER	FOR CITY OF HOUSTON USE ONLY
R-000267-0178-3	
DRAWING SCALE	
AS NOTED	
CITY OF HOUSTON PM	
TAHA LOTIA	
SHEET NO. 261 OF 268	

PLOTTED: 3/30/2026 5:15 PM

PLOT STYLE: Coh_ctb_230809.ctb

FILE NAME: ELECT_HEATHER RIDGE LS 2.dwg

RPS
A TETRA TECH COMPANY
Texas PE Firm Reg. #F-929
575 N. Dairy Ashford, Suite 700,
Houston, Texas 77079
T +1 281 589 7257
E usinfrastructure@rpsgroup.com

SURVEYED BY: KUO Inc.

FB NO. F-4578

ENGINEER'S SEAL

CITY OF HOUSTON

HOUSTON PUBLIC WORKS

RECONSTRUCTION & REHABILITATION
COH LIFT STATIONS

HEATHER RIDGE LS CONTROL
CABINET EQUIPMENT LAYOUT –
III

WBS NUMBER	FOR CITY OF HOUSTON USE ONLY
R-000267-0178-3	
DRAWING SCALE	
AS NOTED	
CITY OF HOUSTON PM	
TAHA LOTIA	
SHEET NO. 262 OF 268	

PLOTTED: 3/30/2026 5:15 PM

PLOT STYLE: Coh_ctb_230809.ctb

FILE NAME: ELECT_HEATHER RIDGE LS 2.dwg

Texas PE Firm Reg. #F-929

575 N. Dairy Ashford, Suite 700,
Houston, Texas 77079
T +1 281 589 7257
E usinfrastructure@rpsgroup.com

SURVEYED BY: KUO Inc.

FB NO. F-4578

ENGINEER'S SEAL

CITY OF HOUSTON

HOUSTON PUBLIC WORKS

RECONSTRUCTION & REHABILITATION
COH LIFT STATIONS

HEATHER RIDGE LS CONTROL
PANEL CONTRIL WIRING
DIAGRAM – I

WBS NUMBER	FOR CITY OF HOUSTON USE ONLY
R-000267-0178-3	
DRAWING SCALE	
AS NOTED	
CITY OF HOUSTON PM	
TAHA LOTIA	
SHEET NO. 263 OF 268	

PLOTTED: 3/30/2026 5:15 PM

PLOT STYLE: Coh_ctb_230809.ctb

FILE NAME: ELECT_HEATHER RIDGE LS 2.dwg

RPS
A TETRA TECH COMPANY
Texas PE Firm Reg. #F-929
575 N. Dairy Ashford, Suite 700,
Houston, Texas 77079
T +1 281 589 7257
E usinfrastructure@rpsgroup.com

SURVEYED BY: KUO Inc.

FB NO. F-4578

ENGINEER'S SEAL

CITY OF HOUSTON

HOUSTON PUBLIC WORKS

RECONSTRUCTION & REHABILITATION
COH LIFT STATIONS

HEATHER RIDGE LS CONTROL
PANEL CONTRIL WIRING
DIAGRAM – II

WBS NUMBER	FOR CITY OF HOUSTON USE ONLY
R-000267-0178-3	
DRAWING SCALE	
AS NOTED	
CITY OF HOUSTON PM	
TAHA LOTIA	
SHEET NO. 264 OF 268	

PLOTTED: 3/30/2026 5:15 PM

PLOT STYLE: Coh_ctb_230809.ctb

FILE NAME: ELECT_HEATHER RIDGE LS 2.dwg

A TETRA TECH COMPANY

Texas PE Firm Reg. #F-929

575 N. Dairy Ashford, Suite 700,
Houston, Texas 77079
T +1 281 589 7257
E usinfrastructure@rpsgroup.com

SURVEYED BY: KUO Inc.

FB NO. F-4578

ENGINEER'S SEAL

CITY OF HOUSTON

HOUSTON PUBLIC WORKS

RECONSTRUCTION & REHABILITATION
COH LIFT STATIONS

HEATHER RIDGE LS CONTROL PANEL CONTRIL WIRING DIAGRAM – III

WBS NUMBER	FOR CITY OF HOUSTON USE ONLY
R-000267-0178-3	
DRAWING SCALE	
AS NOTED	
CITY OF HOUSTON PM	
TAHA LOTIA	
SHEET NO. 265 OF 268	

PLOTTED: 3/30/2026 5:15 PM

PLOT STYLE: Coh_ctb_230809.ctb

FILE NAME: ELECT_HEATHER RIDGE LS 3.dwg

RPS
A TETRA TECH COMPANY
Texas PE Firm Reg. #F-929
575 N. Dairy Ashford, Suite 700,
Houston, Texas 77079
T +1 281 589 7257
E usinfrastructure@rpsgroup.com

SURVEYED BY: KUO Inc.

FB NO. F-4578

ENGINEER'S SEAL

CITY OF HOUSTON

HOUSTON PUBLIC WORKS

RECONSTRUCTION & REHABILITATION
COH LIFT STATIONS

HEATHER RIDGE LS CONTROL
PANEL CONTRIL WIRING
DIAGRAM – IV

WBS NUMBER	FOR CITY OF HOUSTON USE ONLY
R-000267-0178-3	
DRAWING SCALE	
AS NOTED	
CITY OF HOUSTON PM	
TAHA LOTIA	
SHEET NO. 266 OF 268	

PLOTTED: 3/30/2026 5:15 PM

PLOT STYLE: Coh_ctb_230809.ctb

FILE NAME: ELECT_HEATHER RIDGE LS 3.dwg

RPS
A TETRA TECH COMPANY
Texas PE Firm Reg. #F-929
575 N. Dairy Ashford, Suite 700,
Houston, Texas 77079
T +1 281 589 7257
E usinfrastructure@rpsgroup.com

SURVEYED BY: KUO Inc.

FB NO. F-4578

ENGINEER'S SEAL

CITY OF HOUSTON

HOUSTON PUBLIC WORKS

RECONSTRUCTION & REHABILITATION
COH LIFT STATIONS

HEATHER RIDGE LS PUMP NO.1
CONTROL WIRING DIAGRAM

WBS NUMBER	FOR CITY OF HOUSTON USE ONLY
R-000267-0178-3	
DRAWING SCALE	
AS NOTED	
CITY OF HOUSTON PM	
TAHA LOTIA	
SHEET NO. 267 OF 268	

PLOTTED: 3/30/2026 5:15 PM

PLOT STYLE: Coh_ctb_230809.ctb

FILE NAME: ELECT_HEATHER RIDGE LS 3.dwg

RPS
A TETRA TECH COMPANY
Texas PE Firm Reg. #F-929
575 N. Dairy Ashford, Suite 700,
Houston, Texas 77079
T +1 281 589 7257
E usinfrastructure@rpsgroup.com

ENGINEER'S SEAL

SURVEYED BY: KUO Inc.

FB NO. F-4578

CITY OF HOUSTON

HOUSTON PUBLIC WORKS

RECONSTRUCTION & REHABILITATION
COH LIFT STATIONS

HEATHER RIDGE LS PUMP NO.2
CONTROL WIRING DIAGRAM

WBS NUMBER	FOR CITY OF HOUSTON USE ONLY
R-000267-0178-3	
DRAWING SCALE	
AS NOTED	
CITY OF HOUSTON PM	
TAHA LOTIA	
SHEET NO. 268 OF 268	