CITY OF HOUSTON

HOUSTON PUBLIC WORKS

CAPITAL PROJECTS

LIFT STATION REHABILITATION AND RECONSTRUCTION -
WOODLAND RIDGE, BEN'S BRANCH, ELMWOOD HILLS,
TRAIL RIVER, FOREST SHORES, AND RIVER LAWN
LIFT STATIONS
WBS NO. R-000267-0180-3

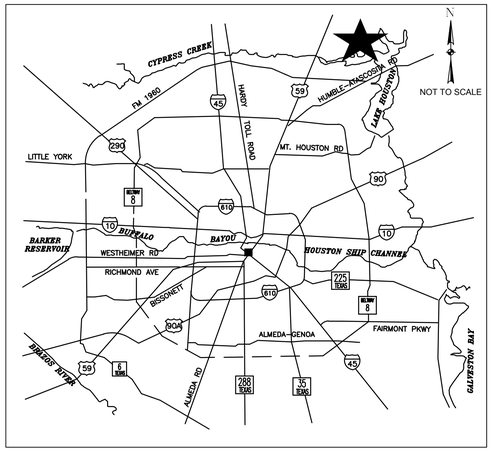

LOCATION MAP

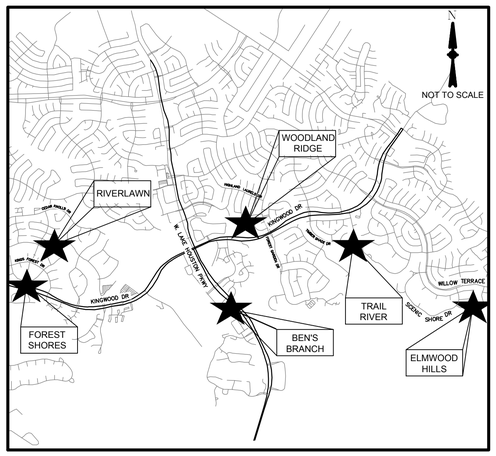

VICINITY MAP
KEY MAP NO: 336D, 337B, 337D, 337F, & 338E

TDLR EABPR _____

MAYOR
JOHN WHITMIRE

CONTROLLER
CHRIS HOLLINS

DISTRICT COUNCIL MEMBERS

AMY PECK, DISTRICT A
TARSHA JACKSON, DISTRICT B
ABBIE KAMIN, DISTRICT C
CAROLYN EVANS-SHABAZZ, DISTRICT D
FRED FLICKINGER, DISTRICT E
TIFFANY D. THOMAS, DISTRICT F
MARY NAN HUFFMAN, DISTRICT G
MARIO CASTILLO, DISTRICT H
JOAQUIN MARTINEZ, DISTRICT I
EDWARD POLLARD, DISTRICT J
MARTHA CASTEX-TATUM, DISTRICT K

COUNCIL MEMBERS AT-LARGE

JULIAN RAMIREZ, POSITION 1
WILLIE DAVIS, POSITION 2
TWILA CARTER, POSITION 3
LETITIA PLUMMER, POSITION 4
SALLIE ALCORN, POSITION 5

NO.	DATE	REVISION	APP.
3			
2			
1			

PAPE-DAWSON
2107 CITYWEST BLVD, 3RD FLR I HOUSTON, TX 77042 I 713.428.2400
TEXAS ENGINEERING FIRM #470 I TEXAS SURVEYING FIRM #10028800

ENGINEER'S SEAL

SURVEYED BY: PAPE-DAWSON ENGINEERS LLC
FB NO. 24-018

PARKS-FORESTRY DEPT.

METRO

HOUSTON WATER

TRANSPORTATION & DRAINAGE OPERATIONS

CAPITAL PROJECTS

SURVEY

CITY ENGINEER DATE

DIRECTOR OF HOUSTON PUBLIC WORKS DATE

SHEET NO 001 OF XX SHEETS

FOR CITY OF HOUSTON USE ONLY

PRIVATE UTILITY NOTES:

AT&T TEXAS/ SWBT FACILITIES:

1. THE LOCATIONS OF AT&T TEXAS/SWBT FACILITIES ARE SHOWN IN AN APPROXIMATE WAY ONLY. THE CONTRACTOR SHALL DETERMINE THE EXACT LOCATION BEFORE COMMENCING WORK. HE AGREES TO BE FULLY RESPONSIBLE FOR ANY AND ALL DAMAGES WHICH MIGHT BE OCCASIONED BY THIS FAILURE TO EXACTLY LOCATE AND PRESERVE THESE UNDERGROUND UTILITIES.
2. THE CONTRACTOR SHALL CALL 1-800-344-8377 (TEXAS 811) A MINIMUM OF 48 HOURS PRIOR TO CONSTRUCTION TO HAVE UNDERGROUND LINES FIELD LOCATED.
3. WHEN EXCAVATING WITHIN EIGHTEEN INCHES (18") OF THE INDICATED LOCATION OF AT&T TEXAS/SWBT FACILITIES, ALL EXCAVATIONS MUST BE ACCOMPLISHED USING NON-MECHANIZED EXCAVATION PROCEDURES. WHEN BORING, THE CONTRACTOR SHALL EXPOSE THE AT&T TEXAS/SWBT FACILITIES.
4. WHEN AT&T TEXAS/SWBT FACILITIES ARE EXPOSED, THE CONTRACTOR WILL PROVIDE SUPPORT TO PREVENT DAMAGE TO THE CONDUIT DUCTS OR CABLES. WHEN EXCAVATING NEAR TELEPHONE POLES THE CONTRACTOR SHALL BRACE THE POLE FOR SUPPORT.
5. THE PRESENCE OR ABSENCE OF AT&T TEXAS/SWBT UNDERGROUND CONDUIT FACILITIES OR BURIED CABLE FACILITIES SHOWN ON THESE PLANS DOES NOT MEAN THAT THERE ARE NO DIRECT BURIED CABLES OR OTHER CABLES IN CONDUIT IN THE AREA.
6. PLEASE CONTACT THE AT&T TEXAS DAMAGE PREVENTION MANAGER ROOSEVELT LEE JR. AT (713) 567-4552 OR EMAIL HIM AT RL7259@ATT.COM, IF THERE ARE QUESTIONS ABOUT BORING OR EXCAVATING NEAR OUR AT&T TEXAS/SWBT FACILITIES.

CENTERPOINT ENERGY NOTES:

CAUTION: UNDERGROUND GAS FACILITIES

1. THE CONTRACTOR SHALL CONTACT THE UTILITY COORDINATING COMMITTEE AT 1-800-545-6005 OR 811 A MINIMUM OF 48 HOURS PRIOR TO CONSTRUCTION TO HAVE MAIN AND SERVICE LINES FIELD LOCATED.
   - -WHEN CENTERPOINT ENERGY PIPE LINE MARKINGS ARE NOT VISIBLE, CALL 713-945-8036 OR 713-945-8037 (7:00 AM TO 4:30 PM) FOR STATUS OF LINE LOCATION REQUEST BEFORE EXCAVATION BEGINS.
   - -WHEN EXCAVATING WITHIN EIGHTEEN INCHES (18") OF THE INDICATED LOCATION OF CENTERPOINT ENERGY FACILITIES, ALL EXCAVATION MUST BE ACCOMPLISHED USING NON-MECHANIZED EXCAVATION PROCEDURES.
   - -WHEN CENTERPOINT ENERGY FACILITIES ARE EXPOSED, SUFFICIENT SUPPORT MUST BE PROVIDED TO THE FACILITIES TO PREVENT EXCESSIVE STRESS ON THE PIPING.
   - -FOR EMERGENCIES REGARDING GAS LINES CALL 713-659-3552 OR 713-207-4200
2. THE CONTRACTOR IS FULLY RESPONSIBLE FOR ANY DAMAGES CAUSED BY HIS FAILURE TO EXACTLY LOCATE AND PRESERVE THESE UNDERGROUND FACILITIES.

WARNING: OVERHEAD ELECTRICAL LINES:

1. OVERHEAD LINES MAY EXIST ON THE PROPERTY. THE LOCATION OF OVERHEAD LINES HAS NOT BEEN SHOWN ON THESE DRAWINGS AS THE LINES ARE CLEARLY VISIBLE, BUT YOU SHOULD LOCATE THEM PRIOR TO BEGINNING ANY CONSTRUCTION. TEXAS LAW, SECTION 752, HEALTH & SAFETY CODE FORBIDS ACTIVITIES THAT OCCUR IN CLOSE PROXIMITY TO HIGH VOLTAGE LINES, SPECIFICALLY:
   - -ANY ACTIVITY WHERE PERSONS OR THINGS MAY COME WITHIN SIX (6) FEET OF LIVE OVERHEAD HIGH VOLTAGE LINES; AND
   - -OPERATING A CRANE, DERRICK, POWER SHOVEL, DRILLING RIG, PILE DRIVER, HOISTING EQUIPMENT, OR SIMILAR APPARATUS WITHIN 10 FEET OF LIVE OVERHEAD HIGH VOLTAGE LINES.
2. PARTIES RESPONSIBLE FOR THE WORK, INCLUDING CONTRACTORS, ARE LEGALLY RESPONSIBLE FOR THE SAFETY OF CONSTRUCTION WORKERS UNDER THIS LAW. THIS LAW CARRIES BOTH CRIMINAL AND CIVIL LIABILITY. TO ARRANGE FOR LINES TO BE TURNED OFF OR REMOVED CALL CENTERPOINT ENERGY AT 713-207-2222.

ACTIVITIES ON/OR ACROSS CENTERPOINT ENERGY FEE OR EASEMENT PROPERTY

1. NO APPROVAL TO USE, CROSS, OR OCCUPY NO CENTERPOINT FEE OR EASEMENT PROPERTY IS GIVEN. IF YOU NEED TO USE CENTERPOINT PROPERTY, PLEASE CONTACT OUR SURVEYING AND RIGHT OF WAY DIVISION AT (713) 207-6348 OR (713) 207-5769

STANDARD NOTES FOR CONSTRUCTION DRAWINGS (HCFCD):

1. OBTAIN AND COMPLY WITH ALL APPLICABLE CITY, COUNTY, STATE, AND FEDERAL PERMITS AND APPROVALS, WITH ASSISTANCE FROM ENGINEER, IF NECESSARY. OBTAIN PERMIT (CERTIFICATION) FROM HARRIS COUNTY ENGINEER TO ENTER HARRIS COUNTY FLOOD CONTROL DISTRICT RIGHT-OF-WAY.
2. NOTIFY THE HARRIS COUNTY FLOOD CONTROL DISTRICT'S PROPERTY MANAGEMENT DEPARTMENT IN WRITING AT LEAST 48 HOURS PRIOR TO CONSTRUCTION. SUBMIT THE HCFCD 48 HOUR PRE-CONSTRUCTION NOTIFICATION FORM, A COPY OF THE APPROVED CONSTRUCTION DRAWINGS, AND A COPY OF THE CORPS OF ENGINEERS INDIVIDUAL SECTION 404 PERMIT, IF APPLICABLE, TO HCFCD, 9900 NORTHWEST FREEWAY, HOUSTON, TEXAS 77092, ATTN: PROPERTY MANAGEMENT DEPT. BY HAND DELIVERY, OR FAX TO 713-684-4129 (FAX NUMBER).
3. ENGINEER SHALL SUBMIT CERTIFICATION LETTER AND RECORD DRAWINGS TO THE HARRIS COUNTY FLOOD CONTROL DISTRICT'S PROPERTY MANAGEMENT DEPARTMENT REQUESTING INSPECTION OF ITEMS CONSTRUCTED IN HARRIS COUNTY FLOOD CONTROL DISTRICT RIGHT-OF-WAY. PRIOR TO REQUESTING INSPECTION, THE DRAINAGE RIGHT-OF-WAY AND/OR EASEMENTS SHALL BE STAKED AND FLAGGED.
4. PROTECT, MAINTAIN, AND RESTORE EXISTING BACKSLOPE DRAINAGE SYSTEMS.
5. BACKSLOPE SWALE AND INTERCEPTOR STRUCTURE ELEVATIONS AND LOCATIONS SHOWN ON PLANS ARE APPROXIMATE. FINAL ELEVATIONS AND LOCATIONS SHALL BE FIELD VERIFIED BY THE ENGINEER PRIOR TO INSTALLATION.
6. ESTABLISH TURF GRASS ON ALL DISTURBED AREAS WITHIN THE CHANNEL OR DETENTION RIGHT-OF-WAY, EXCEPT THE CHANNEL BOTTOM AND WHERE STRUCTURAL EROSION MEASURES ARE USED. MINIMUM ACCEPTANCE CRITERIA ARE 75% COVERAGE OF LIVE BERMUDA GRASS AND NO EROSION OR RILLS DEEPER THAN 4".
7. BACKFILL IN ACCORDANCE WITH THE HARRIS COUNTY FLOOD CONTROL DISTRICT STANDARD SPECIFICATION, SECTION 02315 – EXCAVATING AND BACKFILLING, OR EQUIVALENT.
8. EXCAVATE CHANNEL FLOWLINE TO DESIGN ELEVATION AS SHOWN ON PLANS AND DOWNSTREAM, AS NECESSARY, TO ENSURE NO WATER REMAINS IN THE FACILITY (STORM SEWER, LATERAL CHANNEL, OR DRY BOTTOM DETENTION BASIN) DURING NORMAL WATER SURFACE CONDITIONS IN THE CHANNEL, SO THE FACILITY WILL FUNCTION AS INTENDED. FOR WET BOTTOM DETENTION BASINS, ENSURE NO WATER IS ABOVE THE DESIGN LEVEL IN THE WET BOTTOM DURING NORMAL WATER SURFACE CONDITIONS IN THE CHANNEL.
9. MAINTAIN FLOW IN CHANNEL DURING CONSTRUCTION AND RESTORE CHANNEL TO ORIGINAL CONDITION.
10. REMOVE ALL EXCAVATED MATERIAL FROM THE HARRIS COUNTY FLOOD CONTROL DISTRICT OR DRAINAGE RIGHT-OF-WAY. NO FILL IS TO BE PLACED WITHIN A DESIGNATED FLOOD PLAIN AREA WITHOUT FIRST OBTAINING A FILL PERMIT FROM THE APPROPRIATE JURISDICTIONAL AUTHORITY.

GENERAL NOTES – METRO:

1. CONTRACTOR SHALL NOTIFY METRO AT 713-615-6195 TWO WEEKS PRIOR TO DISTURBING EXISTING BUS STOPS.
1. CONTRACTOR SHALL COORDINATE WITH METRO TO REMOVE EXISTING AMENITIES.
2. BUS STOPS SHALL CONSTRUCTED PER CITY OF HOUSTON INFRASTRUCTURE DESIGN MANUAL AND MEET CURRENT ADA REQUIREMENTS

CITY OF HOUSTON HOUSTON PUBLIC WORKS STORM CONSTRUCTION NOTES

1. STORM SEWER SHALL BE REINFORCED CONCRETE PIPE (C-76, CLASS III), AND SHALL BE INSTALLED, BEDDED, AND BACK FILLED IN ACCORDANCE WITH THE CITY OF HOUSTON DRAWING NOS. 2317-02, 02317-3, 02317-05, 02317-06, AND 02317-07 (JULY 2019) AS APPLICABLE UNLESS OTHERWISW SHOWN ON THE DRAWINGS.
2. ALL STORM SEWER CONSTRUCTED IN SIDELOT EASMENT SHALL BE R.C.P (C-76, CLASSIII) AND SHALL BE EMBEDDED IN ACCORDANCE WITH THE CITY OF HOUSTON DRAWING NOS. 02317-02, 02317-03, 02317-05, 02317-06, AND 02317-07 AS APPLICABLE.
3. ALL SEWER UNDER PROPOSED OR FUTURE PAVEMENT AND TO A POINT ONE (1) FOOT BACK OF ALL PROPOSED OR FUTURE CURBS SHALL BE BACKFILLED WITH 1-1/2 SACK CEMENT/C.Y. STANDARD SAND TO WITHIN (1) FOOT OF SUBGRADE. THE REMAINING DEPTH OF TRENCH SHALL BE BACKFILLED WITH SUITABLE EARTH MATERIAL.
4. ALL TRENCH BACKFILL SHALL BE IN 8" LIFTS, WITH TESTS TAKEN AT 100 FOOT INTERVALS IN EACH LIFT, AND MECHANICALLY COMPACTED TO A DENSITY OF NOT LESS THAN 95% OF THE MAXIMUM DRY DENSITY AS DETERMINED BY THE STANDARD PROCTOR COMPACTION TEST (ASTM D-698/AASHTO T99).
5. CIRCULAR AND ELLIPTICAL REINFORCED CONCRETE PIPE SHALL BE INSTALLED USING RUBBER GASKET JOINT CONFORMING TO ASTM C443 AND ASTM C877 RESPECTIVELY.
6. ALL STORM SEWER PIPES AND INLET LEADS SHALL BE 24" AND LARGER R.C.P. (C-76, CLASS III).
7. ALL PROPOSED PIPE STUB-OUTS FROM MANHOLES AND INLET LEADS ARE TO BE PLUGGED WITH 8" BRICK WALLS UNLESS OTHERWISE NOTED.
8. MINIMUM HORIZONTAL CLEARANCE BETWEEN ANY STORM PIPE AND BOX SHALL BE AT LEAST 48-INCHES FROM EXTERIOR OF THE STORM PIPE OR BOX TO THE EXTERIOR OF THE EXISTING OR PROPOSED PUBLIC OR PRIVATE UTILITY AND OTHER APPURTENANCES. MINIMUM VERTICAL CLEARANCE BETWEEN ANY STORM PIPE AND BOX SHALL BE AT LEAST 24-INCHES FROM EXTERIOR OF THE STORM PIPE OR BOX TO THE EXTERIOR OF THE EXISTING OR PROPOSED PUBLIC OR PRIVATE UTILITY AND OTHER APPURTENANCES.
9. ADJUST MANHOLE COVERS TO GRADE CONFORMING TO REQUIREMENTS OF SECTION 02086-ADJUSTING MANHOLES, INLETS, AND VALVE BOXES TO GRADE.
10. THE CONTRACTOR SHALL BE RESPONSIBLE FOR PROTECTING, MAINTAINING, AND RESTORING ANY BACK SLOPE DRAINAGE SYSTEM DISTURBED AS A RESULT OF THIS WORK.
11. ALL DITCHES SHALL BE GRADED TO PROPOSED ELEVATIONS TO INSURE PROPER DRAINAGE. ALL OUTFALLS SHALL BE PROPERLY BACKFILLED AND COMPACTED. ALL DISTURBED AREA SHALL BE REGRADED, SEEDED, AND FERTILIZED.
12. ALL DRIVEWAYS WILL BE LOCATED TO AVOID EXISTING CURB INLET STRUCTURES.

HCFCD GENERAL NOTES:

FENCES AND/OR OTHER ENCROACHMENTS IN THE HCFCD RIGHT-OF-WAY ARE NOT TO BE REMOVED UNLESS OTHERWISE STATED ON THE PLANS. IN CASES WHERE FENCE REMOVAL IS INDICATED ON THE PLANS, THE FENCE SHALL BE REMOVED AND PLACED NEATLY ON THE ADJACENT PROPERTY AT THE START OF CONSTRUCTION. WHERE THERE IS NOT A SEPARATE ITEM LISTED ON THE UNIT PRICE SCHEDULE, THE ENCROACHMENT REMOVAL IS INCIDENTAL TO SITE PREPARATION AND RESTORATION.

DO NOT ENTER PRIVATE PROPERTY WITHOUT PROPER WRITTEN AUTHORIZATION FROM THE OWNER. PROVIDE COPY OF WRITTEN PERMISSION TO HCFCD.

STRIP VEGETATION AND TOPSOIL AND STOCKPILE FOR REUSE ONSITE. MATERIAL FOUND UNACCEPTABLE BY THE ENGINEER WILL BE REMOVED AND PAID AS EXCAVATION AND OFFSITE DISPOSAL. NO SEPARATE MEASUREMENT AND PAYMENT WILL BE MADE FOR STRIPPING, STOCKPILING AND PLACING ON-SITE TOPSOIL. THE COST FOR THIS WORK WILL BE INCIDENTAL TO RELATED PAY ITEMS UNDER SPECIFICATION SECTION NUMBER 02315 LISTED ON THE UNIT PRICE SCHEDULE.

RIPRAP AND GRANULAR FILL MATERIAL REMOVED DURING EXCAVATION, MEETING SPECIFICATION SECTION NUMBER 02378, SHALL BE REUSED AS DIRECTED BY THE ENGINEER. REUSED MATERIAL WILL BE MEASURED AND PAID FOR AS EXCAVATION AND ON-SITE FILL UNDER SPECIFICATION NUMBER 02315. NO SEPARATE MEASUREMENT OR PAYMENT WILL BE MADE FOR PROCESSING, HANDLING, STOCKPILING, AND PLACING MATERIAL FOUND TO BE ACCEPTABLE FOR REUSE. UPON APPROVAL OF THE ENGINEER, DISPOSAL OF NONCONFORMING RIPRAP AND GRANULAR FILL MATERIAL WILL BE MEASURED AND PAID FOR AS REMOVE AND DISPOSE OF CONCRETE RUBBLE UNDER SPECIFICATION SECTION NUMBER 02120, MATERIAL DISPOSAL.

THE LOCATION AND GRADE OF THE BACKSLOPE INTERCEPTOR STRUCTURES AND SWALES MAY BE ADJUSTED IN THE FIELD BY THE ENGINEER AT THE TIME OF CONSTRUCTION. UNLESS OTHERWISE INSTRUCTED BY THE ENGINEER, THE BACKSLOPE INTERCEPTOR STRUCTURE SHALL BE SET AT A MAXIMUM DEPTH OF 2.5 FEET AND THE MINIMUM GRADE FOR BACKSLOPE SWALES SHALL BE 0.2%.

ADJUST YARD DRAINS AS DIRECTED IN THE FIELD AT THE TIME OF CONSTRUCTION. PAYMENT WILL BE INCIDENTAL TO SITE PREPARATION AND RESTORATION.

COMPLETED SECTIONS OF THE CHANNEL WILL BE TURNED OVER FOR VEGETATION ESTABLISHMENT IN MAXIMUM 1500 LINEAR FOOT SEGMENTS. CONTRACTOR MAY NOT DISTURB GREATER THAN 1500 LF OF CHANNEL AT A TIME.

CLEAR AND REMOVE ALL SILT FROM CULVERTS, PIPES AND UNDER BRIDGES TO THE PROPOSED DESIGN GRADES TO PROVIDE POSITIVE FLOW.

LENGTHS AND DIAMETERS REPRESENTED ON PLANS ARE APPROXIMATE. CONTRACTOR WILL BE RESPONSIBLE FOR FIELD VERIFICATION PRIOR TO ORDERING MATERIALS.

ACTIVITIES THAT DISTURB BIRD HABITAT, INCLUDING BUT NOT LIMITED TO CLEARING, GRUBBING, AND IMPACTS TO STRUCTURES WHERE MIGRATORY BIRDS AND BALD EAGLES MIGHT NEST, REQUIRE A NEST HABITAT SURVEY. DO NOT PROCEED UNTIL HARRIS COUNTY FLOOD CONTROL DISTRICT HAS CONDUCTED A NEST HABITAT SURVEY TO VERIFY ACTIVE MIGRATORY BIRD NESTS AND BALD EAGLE NESTS ARE NOT PRESENT. THE HARRIS COUNTY FLOOD CONTROL DISTRICT MUST PROVIDE WRITTEN AUTHORIZATION TO PROCEED.

WHEN BANK EROSION REPAIRS CALL FOR THE PLACEMENT OF 3"x5" GRANULAR FILL IN THE CHANNEL BOTTOM TO ESTABLISH A BASE FOR REBUILDING THE SLOPE. THE 3"x5" GRANULAR FILL SHALL BE LIMITED TO AN ELEVATION 6-INCHES ABOVE THE NORMAL WATER SURFACE ELEVATION LEVEL.

THE CONTRACT CONTAINS UNIT ITEMS FOR THE ESTABLISHMENT OF BEST MANAGEMENT PRACTICES FOR STORM WATER QUALITY PURPOSES. WHEN NOT CALLED FOR IN THE PROJECT PLANS, COORDINATE THE NEED AND LOCATION OF THESE UNIT ITEMS WITH THE DISTRICT REPRESENTATIVE ON SITE PRIOR TO PLACEMENT. THESE UNIT ITEMS INCLUDE, BUT ARE NOT LIMITED TO, REINFORCED SILT FENCE FOR MATERIAL STOCKPILES, ANCHORED SODDING FOR DISTURBED EARTHEN AREAS OR AROUND CONCRETE AND CONCRETE INTERCEPTOR, AND STABILIZED CONSTRUCTION ACCESS FOR PROJECT SITE INGRESS/EGRESS.

WHEN INCLUDED IN THE SCOPE OF WORK, THE PURPOSE OF DEEP PLOWING THE SLOPE OR BERM OF A CHANNEL IS TO BREAK UP THE DESICCATED SOILS AND TO ELIMINATE ANY VOIDS, OR RILLING CLOSE TO THE SURFACE OF THE SLOPE OR BERM. THE CONTRACTOR WILL DEEP PLOW THE SLOPE OR BERM TO A MINIMUM DEPTH OF 2 FEET IN AREAS CONTAINING VOIDS AND/OR RILLING. IN AREAS OF VOIDS ONLY, THE SURFACE FROM WHICH THE 2 FEET DEPTH IS MEASURED WILL BE THE LEVEL OF THE SURROUNDING UNDISTURBED SOIL. IN AREAS OF RILLING, THE RILLS WILL FIRST BE KNOCKED DOWN AND LEVELED OFF. THE 2 FEET DEPTH WILL THEN BE MEASURED FROM THIS NEW SURFACE. THE CONTRACTOR WILL DETERMINE THE MEANS AND METHODS FOR DEEP PLOWING.)

TREES AND PLANTS LOCATED WITHIN A DESIGNATED TREE PROTECTION ZONE (TPZ) SHALL BE PRESERVED. REFER TO SPECIFICATION SECTION 01566 – TREE AND PLANT PROTECTION, FOR DETAILED INFORMATION ON TREE AND PLANT PRESERVATION PRACTICES AND PROCEDURES INCLUDING, BUT NOT LIMITED TO, ROOT PRUNING, VEGETATION TRIMMING, FENCING AND OTHER PRESERVATION OPERATIONS.

IF APPLICABLE, CONTRACTOR SHALL AVOID ANY WETLAND AREAS BEYOND THE LIMITS OF EXCAVATION AND CLEARING. AS THE FIRST WORK ITEM CONTRACTOR WILL BE RESPONSIBLE FOR INSTALLING FENCING OR OTHER MATERIAL TO IDENTIFY AND PROTECT THE IDENTIFIED WETLAND AREAS, UNLESS WETLANDS HAVE BEEN IDENTIFIED AND FENCED BY HCFCD PRIOR TO CONSTRUCTION AND CONTRACTOR HAS WRITTEN EVIDENCE OF SUCH.

NO.	DATE	REVISION	APP.

NOTICE:
FOR YOUR SAFETY, YOU ARE REQUIRED BY TEXAS LAW TO CALL 811 AT LEAST 48 HOURS BEFORE YOU DIG SO THAT UNDERGROUND LINES CAN BE MARKED. THIS SIGNATURE DOES NOT FULFILL YOUR OBLIGATION TO CALL 811

VERIFICATION OF PRIVATE UTILITY LINES

Date

CenterPoint Energy natural gas utilities shown. (Gas service lines are not shown). This signature not be used for conflict verification.

Signature valid for six months.

Date

CenterPoint Energy/UNDERGROUND Electrical Facilities Verification ONLY. (This signature verifies existing underground facilities – not to be used for conflict verification)

Signature valid for six months.

Date

Approved for AT&T underground conduit facilities only.
Signature valid for one year.

PAPE-DAWSON
2107 CITYWEST BLVD, 3RD FLR I HOUSTON, TX 77042 I 713.428.2400
TEXAS ENGINEERING FIRM #470 I TEXAS SURVEYING FIRM #10028800

PAPE-DAWSON
2107 CITYWEST BOULEVARD
3RD FLR
HOUSTON, TEXAS 77402
713-428-2400
TX FIRM #470

SURVEYED BY:
PAPE-DAWSON
FB NO. 24-018

THIS DOCUMENT IS RELEASED FOR INTERIM REVIEW UNDER THE AUTHORIZATION OF AMIRHOSSEIN SHOKOUHI, P.E. (#139835) AND IS **NOT TO BE USED FOR CONSTRUCTION.**

CITY OF HOUSTON
HOUSTON PUBLIC WORKS

LIFT STATION REHABILITATION AND RECONSTRUCTION
BEN'S BRANCH, WOODLAND RIDGE, ELMWOOD HILLS, FOREST SHORES, TRAIL RIVER, RIVERLAWN

GENERAL

GENERAL NOTES

WBS NUMBER	FOR CITY OF HOUSTON USE ONLY
R-000267-0180-3	
DRAWING SCALE	
AS NOTED	
CITY OF HOUSTON PM	
BRENDA JOHNSON P.E.	
SHEET NO. 003 OF 338	

G-03

FILE PATH: K:\Projects\423\77 COH LS Package\00\03 CADD\Plans\Sheets\01 General\GENERAL NOTES-42377-00.dwg

EXISTING PLAN VIEW

- WATER METER
- WATER VALVE (GATE)
- WATER VALVE (BUTTERFLY)
- FIRE HYDRANT/FLUSHING VALVE
- TAPPING SLEEVE & VALVE
- REDUCER (8" / 6")
- ROUND CONNECTION
- SANITARY SEWER CLEANOUT & MANHOLE (CO, SAN, SAN MH)
- STORM SEWER MANHOLE (STM, STM MH)
- STORM SEWER INLETS ('B–B' 'C' 'C–1' 'C–2' 'C–2A' 'GRATE')
- CULVERT PIPE AND HEADWALL
- TOP OF CURB ELEVATION (TC=XX.XX)
- GUTTER ELEVATION (G=XX.XX)
- TOP OF PAVEMENT ELEVATION (TP=XX.XX)
- CONTOUR LINE (XX.X')
- ROW LINE
- PROPERTY LINE
- LOT LINES
- EASEMENT LINE
- CENTER LINE OF ROW
- TRANSIT LINE
- EDGE OF DITCHES
- CENTER LINE OF DITCHES
- EDGE OF DITCHES
- FENCE LINE, WOOD
- FENCE LINE, CHAIN LINK
- FENCE LINE, BARBED WIRE
- FENCE LINE, HOG WIRE
- EDGE OF CONCRETE
- CURB LINE
- CONCRETE WALK
- EDGE OF ASPHALT
- EDGE OF SHELL OR GRAVEL
- DIMENSION LINE (28" 3–17)
- AERIAL POWER LINE (P)
- UNDERGROUND POWER LINE (UGP)
- GAS LINE (GAS)
- UNKNOWN UNDERGROUND LINE (MISC)
- OIL PIPELINE (OGP) (IDENTIFY CONDUIT)
- UNDERGROUND TELECOMM LINE W/VAULT (UGT)
- AERIAL TELECOMM LINE (T)
- RAILROAD LINE
- WATER LINE (20" (AND SMALLER) WATER; 24" (LARGER THAN 20") WATER (LDWL))
- SANITARY SEWER LINE (24" (AND SMALLER) SANITARY SEWER; 30" (LARGER THAN 24") SANITARY SEWER (SAN))
- STORM SEWER LINE (24" (AND SMALLER) STORM SEWER; 30" (LARGER THAN 24") STORM SEWER (STM))
- SANITARY SEWER FORCE MAIN (FM)
- RECLAIMED WATER LINE (RWL)
- NON–POTABLE WATER LINE (NPW)
- GAS METER (GAS)
- GAS VALVE (GAS)
- PROPANE LINE (PROPANE)
- STEAM LINE (STEAM)
- MISC UNDERGROUND PIPELINE LABLE (A2)

PROPOSED PLAN VIEW

- WATER METER (WM)
- WATER VALVE (GATE) (WV)
- WATER VALVE (BUTTERFLY) (BFWV)
- FIRE HYDRANT/FLUSHING VALVE (FH, WV)
- TAPPING SLEEVE & VALVE (TS&V)
- REDUCER (12" / 8")
- ROUND CONNECTION
- SANITARY SEWER CLEANOUT & MANHOLE (CO, SAN, SAN MH)
- STORM SEWER MANHOLE (STM, STM MH)
- STORM SEWER INLETS ('B' 'B–B' 'C' 'C–1' 'C–2' 'C–2A' 'GRATE')
- CULVERT PIPE AND HEADWALL
- TOP OF CURB ELEVATION (TC=XX.XX)
- GUTTER ELEVATION (G=XX.XX)
- TOP OF PAVEMENT ELEVATION (TP=XX.XX)
- CONTOUR LINE (XX.X')
- ROW LINE
- PROPERTY LINE
- LOT LINES
- EASEMENT LINE
- CENTER LINE OF ROW
- TRANSIT LINE
- EDGE OF DITCHES
- CENTER LINE OF DITCHES
- EDGE OF DITCHES
- FENCE LINE, WOOD
- FENCE LINE, CHAIN LINK
- FENCE LINE, BARBED WIRE
- FENCE LINE, HOG WIRE
- EDGE OF CONCRETE
- CURB LINE
- CONCRETE WALK
- EDGE OF ASPHALT
- EDGE OF SHELL OR GRAVEL
- DIMENSION LINE (28" 3–17)
- AERIAL POWER LINE (P)
- UNDERGROUND POWER LINE (UGP)
- GAS LINE (GAS)
- UNKNOWN UNDERGROUND LINE (MISC)
- OIL PIPELINE (OGP) (IDENTIFY CONDUIT)
- UNDERGROUND TELCOMM LINE W/ VAULT (UGT)
- AERIAL TELECOMM LINE (T)
- RAILROAD LINE
- WATER LINE (20" (AND SMALLER) WATER; 24" (LARGER THAN 20") WATER (LDWL))
- SANITARY SEWER LINE (24" (AND SMALLER) SANITARY SEWER; 30" (LARGER THAN 24") SANITARY SEWER (SAN))
- STORM SEWER LINE (24" (AND SMALLER) STORM SEWER; 30" (LARGER THAN 24") STORM SEWER (STM))
- SANITARY SEWER FORCE MAIN (FM)
- RECLAIMED WATER LINE (RWL)
- NON–POTABLE WATER LINE (NPW)
- GAS METER (GAS)
- GAS VALVE (GAS)
- PROPANE LINE (PROPANE)
- STEAM LINE (STEAM)
- MISC UNDERGROUND PIPELINE LABLE (A2)
- MATCH LINE

EXISTING PLAN VIEW

- PAVING HEADER
- BUILDING, RESIDENTIAL (RES. 1–STORY BR. BLDG.)
- BUILDING, COMMERCIAL (COMM. 1–STORY BR. BLDG.)
- TREE
- HEDGE
- IRON PIPE OR IRON ROD MONUMENT (3/4" IP)
- POINT OF INTERSECTION (PI)
- POINT OF CURVE (PC)
- POINT OF TANGENCY (PT)
- POWER POLE (P)
- POWER POLE W/DOWN GUY (P)

EXISTING PROFILE VIEW

- NORTH OR EAST PROPERTY LINE
- SOUTH OR WEST PROPERTY LINE
- NORTH OR EAST CURB
- SOUTH OR WEST CURB
- NORTH OR EAST DITCH
- SOUTH OR WEST DITCH
- NORTH OR EAST NATURAL GROUND
- SOUTH OR WEST NATURAL GROUND
- NORTH OR EAST CULVERT (CULVERT)
- SOUTH OR WEST CULVERT (CULVERT)
- CENTERLINE OF ROW
- CENTERPOINT ENERGY CONDUIT (UGP CENTERPOINT ENERGY CONDUIT)
- GAS LINE (UGP GAS; GAS GAS; OGP GAS)
- WESTERN UNION (OGP WESTERN UNION)
- AT&T CONDUIT (OGP UGT AT&T CONDUIT)
- WATER LINE (20" (AND SMALLER) WATER LINE; 24" (LARGER THAN 20") WATER)
- SANITARY SEWER LINE (24" (AND SMALLER) SANITARY SEWER; 30" (LARGER THAN 24") SANITARY SEWER (SAN))
- STORM SEWER LINE (24" (AND SMALLER) STORM SEWER; 30" (LARGER THAN 24") STORM SEWER (STM))
- SANITARY SEWER FORCE MAIN (FM)
- RECLAIMED WATER LINE (RWL)
- NON–POTABLE WATER LINE (NPW)
- CENTERPOINT ENERGY MANHOLE
- AT&T MANHOLE
- WATER LINE MANHOLE
- SANITARY SEWER MANHOLE & CLEANOUT
- STORM SEWER MANHOLE
- STORM SEWER INLET

PROPOSED PLAN VIEW

- PAVING HEADER
- BUILDING, RESIDENTIAL (RES. 1–STORY BR. BLDG.)
- BUILDING, COMMERCIAL (COMM. 1–STORY BR. BLDG.)
- TREE
- HEDGE
- IRON PIPE OR IRON ROD MONUMENT (3/4" IP)
- POINT OF INTERSECTION (PI)
- POINT OF CURVE (PC)
- POINT OF TANGENCY (PT)
- POWER POLE (P)
- POWER POLE W/DOWN GUY (P)

PROPOSED PROFILE VIEW

- NORTH OR EAST PROPERTY LINE
- SOUTH OR WEST PROPERTY LINE
- NORTH OR EAST CURB
- SOUTH OR WEST CURB
- NORTH OR EAST DITCH
- SOUTH OR WEST DITCH
- NORTH OR EAST NATURAL GROUND
- SOUTH OR WEST NATURAL GROUND
- NORTH OR EAST CULVERT (CULVERT)
- SOUTH OR WEST CULVERT (CULVERT)
- CENTERLINE OF ROW
- CENTERPOINT ENERGY CONDUIT (UGP CENTERPOINT ENERGY CONDUIT)
- GAS LINE (UGP GAS; GAS GAS; OGP GAS)
- WESTERN UNION (OGP WESTERN UNION)
- AT&T CONDUIT (OGP UGT AT&T CONDUIT)
- WATER LINE (20" (AND SMALLER) WATER LINE; 24" (LARGER THAN 20") WATER)
- SANITARY SEWER LINE (24" (AND SMALLER) SANITARY SEWER; 30" (LARGER THAN 24") SANITARY SEWER (SAN))
- STORM SEWER LINE (24" (AND SMALLER) STORM SEWER; 30" (LARGER THAN 24") STORM SEWER (STM))
- SANITARY SEWER FORCE MAIN (FM)
- RECLAIMED WATER LINE (RWL)
- NON–POTABLE WATER LINE (NPW)
- CENTERPOINT ENERGY MANHOLE
- AT&T MANHOLE
- WATER LINE MANHOLE
- SANITARY SEWER MANHOLE & CLEANOUT
- STORM SEWER MANHOLE
- STORM SEWER INLET

MISC STANDARD ELEMENTS

- COH NORTH ARROW (N)
- COH BAR SCALE (0' 10' 20' 40'; SCALE: 1"=20')
- REVISION CLOUD/DELTA (1)
- DETAIL/SECTION TITLE (1 VIEW TITLE; SCALE: 1:1)
- SECTION CALLOUT (1 / XX)
- DETAIL CALLOUT (1 / XX)

NO.	DATE	REVISION	APP.

NOTICE:
FOR YOUR SAFETY, YOU ARE REQUIRED BY TEXAS LAW TO CALL 811 AT LEAST 48 HOURS BEFORE YOU DIG SO THAT UNDERGROUND LINES CAN BE MARKED. THIS SIGNATURE DOES NOT FULFILL YOUR OBLIGATION TO CALL 811

VERIFICATION OF PRIVATE UTILITY LINES

Date

CenterPoint Energy natural gas utilities shown. (Gas service lines are not shown). This signature not be used for conflict verification.

Signature valid for six months.

Date

CenterPoint Energy/UNDERGROUND Electrical Facilities Verification ONLY. (This signature verifies existing underground facilities – not to be used for conflict verification)

Signature valid for six months.

Date

Approved for AT&T underground conduit facilities only.
Signature valid for one year.

PAPE–DAWSON
2107 CITYWEST BLVD, 3RD FLR I HOUSTON, TX 77042 I 713.428.2400
TEXAS ENGINEERING FIRM #470 I TEXAS SURVEYING FIRM #10028800

PAPE–DAWSON
2107 CITYWEST BOULEVARD
3RD FLR
HOUSTON, TEXAS 77402
713–428–2400
TX FIRM #470

SURVEYED BY:
PAPE–DAWSON
FB NO. 24–018

THIS DOCUMENT IS RELEASED FOR INTERIM REVIEW UNDER THE AUTHORIZATION OF AMIRHOSSEIN SHOKOUHI, P.E. (#139835) AND IS **NOT TO BE USED FOR CONSTRUCTION.**

CITY OF HOUSTON
HOUSTON PUBLIC WORKS

LIFT STATION REHABILITATION AND RECONSTRUCTION
BEN'S BRANCH, WOODLAND RIDGE, ELMWOOD HILLS, FOREST SHORES, TRAIL RIVER, RIVERLAWN

GENERAL

SYMBOLS

WBS NUMBER	FOR CITY OF HOUSTON USE ONLY
R–000267–0180–3	
DRAWING SCALE	
AS NOTED	
CITY OF HOUSTON PM	
BRENDA JOHNSON P.E.	
SHEET NO. 004 OF 338	

G–04

FILE PATH: K:\Projects\423\77 COH LS Package\00\03 CADD\Plans\Sheets\01 General\SYMBOLS– 42377–00.dwg

ABBREVIATIONS:

&	AND
@	AT
AB	ALL BELL
AC	ACRE / ASBESTOS CEMENT
AI/VR	AIR INLET / VACUUM RELIEF
APPROX	APPROXIMATELY
ASPH	ASPHALT
AVE	AVENUE
℄	BASELINE
B/B	BACK TO BACK
BC	BACK OF CURB
BFV	BUTTERFLY VALVE
BL	BUILDING LINE
BLDG	BUILDING
BLVD	BOULEVARD
℄	CENTER LINE
C/C	CENTER TO CENTER
CGMP	CORRUGATED GALVANIZED METAL PIPE
CMP	CORRUGATED METAL PIPE
CIP	CAST IRON PIPE
CLR	CLEARANCE
CO	CLEAN OUT
COH	CITY OF HOUSTON
CONC	CONCRETE
CONSTR	CONSTRUCTION
CPEE	CENTERPOINT ENERGY ELECTRIC
CPEG	CENTERPOINT ENERGY GAS
DIA	DIAMETER
DIP	DUCTILE IRON PIPE
DR	DRIVE
DWG	DRAWING
DWY	DRIVEWAY
E	EAST
EL	ELEVATION
EP	EDGE OF PAVEMENT
E/R	END OF RADIUS
ESMT	EASEMENT
EXST	EXISTING
FC	FACE OF CURB
F/F	FACE TO FACE
FH	FIRE HYDRANT
℄	FLOW LINE
FM	FORCE MAIN
FT	FEET
GPS	GLOBAL POSITIONING SYSTEM
GV	GATE VALVE
GV&B	GATE VALVE AND BOX
HCFCD	HARRIS COUNTY FLOOD CONTROL DISTRICT
HDPE	HIGH-DENSITY POLYETHYLENE
HGL	HYDRAULIC GRADE LINE
HP	HIGH PRESSURE
INV EL	INVERT ELEVATION
IP	INTERMEDIATE PRESSURE
IR	IRON ROD

ABBREVIATIONS:

J-BOX	JUNCTION BOX
JT	JOINT
JUNCT	JUNCTION
LF	LINEAR FEET
LN	LANE
LPT	LOW POINT
LT	LEFT
LS	LIFT STATION
MAX	MAXIMUM
METRO	METROPOLITAN TRANSIT AUTHORITY
MH	MANHOLE
MIN	MINIMUM
MON	MONUMENT
N	NORTH
NA	NOT APPLICABLE
NAVD	NORTH AMERICAN VERTICAL DATUM
NG	NATURAL GROUND
NO	NUMBER
NTS	NOT TO SCALE
OCC	ZERO CURB CUT
OS	OFFSET
OH	OVERHEAD
PC	POINT OF CURVE
PCC	POINT OF COMPOUND CURVATURE
PCCP	PRESTRESSED CONCRETE CYLINDER PIPE
PERM	PERMANENT
PGL	PROFILE GRADE LINE
PI	POINT OF INTERSECTION
PL	PROPERTY LINE
PNT	POINT
PPCA	POTENTIALLY PETROLEUM CONTAMINATED AREA
PRC	POINT OF REVERSE
PROP	PROPOSED
PSI	POUND PER SQUARE INCH
PT	POINT OF TANGENCY
PVC	POLYVINYL CHLORIDE PIPE / POINT OF VERTICAL CURVATURE
PVMT	PAVEMENT
PVI	POINT OF VERTICAL INTERSECTION
PVT	POINT OF VERTICAL TANGENCY

ABBREVIATIONS:

Ⓡ	RECORD DRAWING
R	RADIUS
RCB	REINFORCED CONCRETE BOX
RCP	REINFORCED CONCRETE PIPE
RD	ROAD
REINF	REINFORCED
REM	REMOVABLE
RJ	RESTRAINED JOINT
ROW	RIGHT OF WAY
RR	RAILROAD
RRPM	REFLECTIVE REMOVABLE PAVEMENT MARKERS
RT	RIGHT
S	SOUTH
SAN	SANITARY
SCHED	SCHEDULE
SF	SQUARE FEET
SHT	SHEET
SSE	SANITARY SEWER EASEMENT
ST	STREET
STA	STATION
STD	STANDARD
STL	STEEL
STM	STORM
SWBT	SOUTHWESTERN BELL TELEPHONE
SWR	SEWER
SY	SQUARE YARD
TAN	TANGENT
TBM	TEMPORARY BENCHMARK
TEMP	TEMPORARY
TOB	TOP OF BANK
TOC	TOP OF CURB
TOP	TOP OF PAVEMENT
TOS	TOP OF STACK
TS&V	TAPPING SLEEVE AND VALVE
TXDOT	TEXAS DEPARTMENT OF TRANSPORTATION
TYP	TYPICAL
UE	UTILITY EASEMENT
UGND	UNDERGROUND
VC	VERTICAL CURVE
VCP	VITRIFIED CLAY PIPE
VPI	VERTICAL POINT OF INTERSECTION
W	WEST
W/	WITH
WL	WATER LINE
WLE	WATER LINE EASEMENT
WM	WATER METER
WP	WOOD POLE
WSEL	WATER SURFACE ELEVATION
WV	WATER VALVE
WWTP	WASTE WATER TREATMENT PLANT

NO.	DATE	REVISION	APP.

NOTICE:
FOR YOUR SAFETY, YOU ARE REQUIRED BY TEXAS LAW TO CALL 811 AT LEAST 48 HOURS BEFORE YOU DIG SO THAT UNDERGROUND LINES CAN BE MARKED. THIS SIGNATURE DOES NOT FULFILL YOUR OBLIGATION TO CALL 811

VERIFICATION OF PRIVATE UTILITY LINES

Date

CenterPoint Energy natural gas utilities shown. (Gas service lines are not shown). This signature not be used for conflict verification.

Signature valid for six months.

Date

CenterPoint Energy/UNDERGROUND Electrical Facilities Verification ONLY. (This signature verifies existing underground facilities – not to be used for conflict verification)

Signature valid for six months.

Date

Approved for AT&T underground conduit facilities only.
Signature valid for one year.

PAPE-DAWSON
2107 CITYWEST BLVD, 3RD FLR I HOUSTON, TX 77042 I 713.428.2400
TEXAS ENGINEERING FIRM #470 I TEXAS SURVEYING FIRM #10028800

PAPE-DAWSON
2107 CITYWEST BOULEVARD
3RD FLR
HOUSTON, TEXAS 77402
713-428-2400
TX FIRM #470

THIS DOCUMENT IS RELEASED FOR INTERIM REVIEW UNDER THE AUTHORIZATION OF AMIRHOSSEIN SHOKOUHI, P.E. (#139835) AND IS **NOT TO BE USED FOR CONSTRUCTION.**

SURVEYED BY:
PAPE-DAWSON
FB NO. 24-018

CITY OF HOUSTON
HOUSTON PUBLIC WORKS

LIFT STATION REHABILITATION AND RECONSTRUCTION
BEN'S BRANCH, WOODLAND RIDGE, ELMWOOD HILLS, FOREST SHORES, TRAIL RIVER, RIVERLAWN

GENERAL

ABBREVIATIONS

WBS NUMBER	FOR CITY OF HOUSTON USE ONLY
R-000267-0180-3	
DRAWING SCALE	
AS NOTED	
CITY OF HOUSTON PM	
BRENDA JOHNSON P.E.	
SHEET NO. 005 OF 338	

G-05

FILE PATH: K:\Projects\423\77 COH LS Package\00\03 CADD\Plans\Sheets\01 General\ABBREVIATION- 42377-00.dwg

DocuSign Envelope ID: CB71C116-B716-4899-A5EE-0D2F2CC55AF6

NOTES:
1. CONTRACTOR TO USE CURRENT MAYOR, CONTROLLER, AND COUNCIL NAMES AT TIME OF SIGNAGE CONSTRUCTION.

NO.	DATE	REVISION	APP.

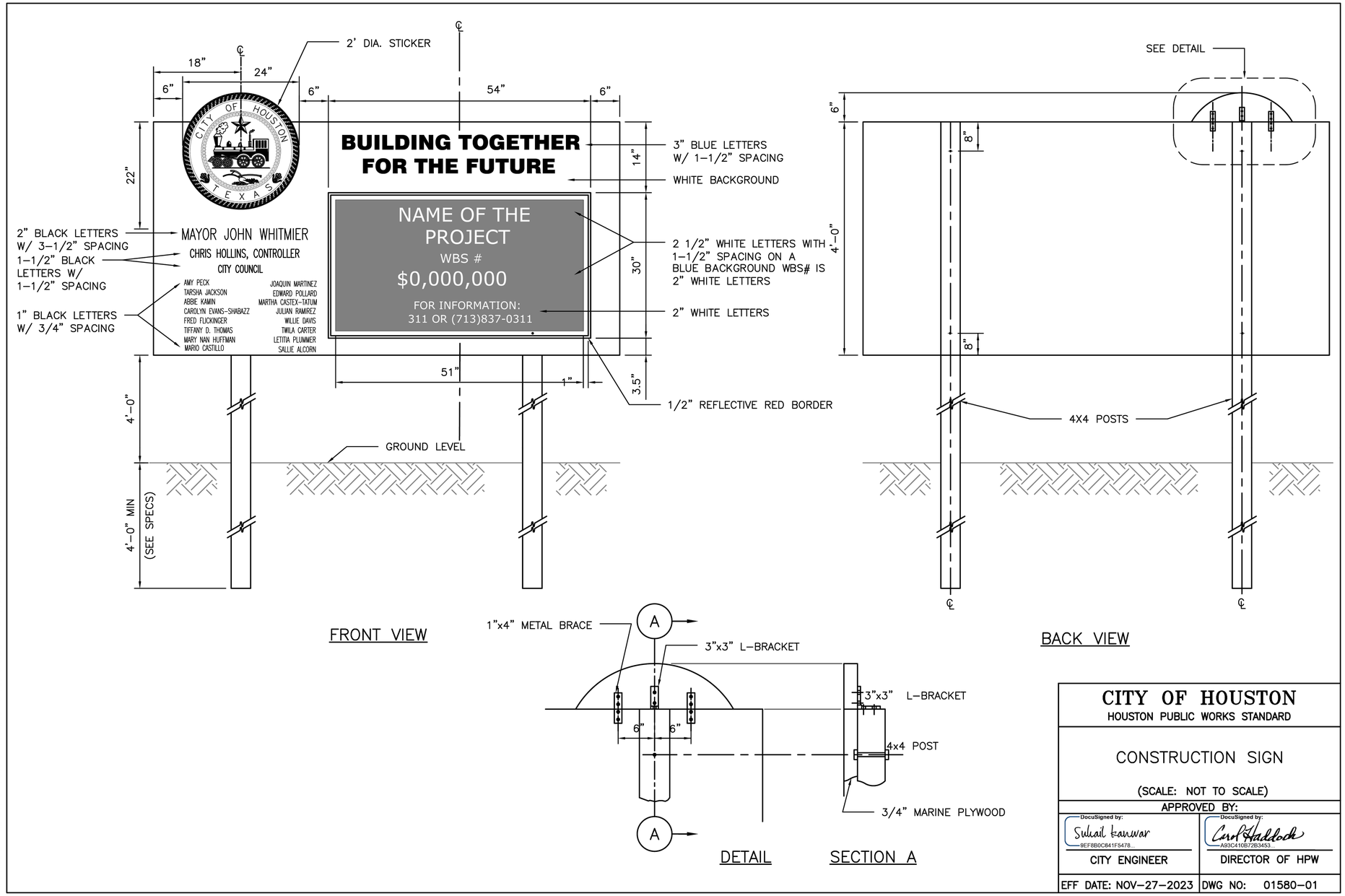

DISCLAIMER:
THE USE OF THIS STANDARD IS GOVERNED BY THE TEXAS ENGINEERING PRACTICE ACT. THE DESIGN REQUIREMENTS ON THIS STANDARD DO NOT PURPORT TO ADDRESS ALL OF THE SAFETY CONCERNS ASSOCIATED WITH THEIR USE. THE ENGINEER OF RECORD (EOR) IS TO REVIEW THESE DESIGN REQUIREMENTS AND BY AUTHORIZING THEIR USE, ACCEPTS RESPONSIBILITY FOR THEIR APPLICABILITY, ADEQUACY AND SAFETY. NO WARRANTY OF ANY KIND IS MADE BY THE CITY OF HOUSTON FOR ANY PURPOSES WHATSOEVER. THE CITY OF HOUSTON ASSUMES NO RESPONSIBILITY FOR INCORRECT RESULTS OR DAMAGES RESULTING FROM ITS USE.

CITY OF HOUSTON
HOUSTON PUBLIC WORKS STANDARD

CONSTRUCTION SIGN

(SCALE: NOT TO SCALE)

APPROVED BY:	
DocuSigned by: Suhail Kanwar 9EF8B0C841F5478...	DocuSigned by: Carol Haddock A93C410B72B3453...
CITY ENGINEER	DIRECTOR OF HPW
EFF DATE: NOV–27–2023	DWG NO: 01580–01

PAPE–DAWSON
2107 CITYWEST BLVD, 3RD FLR I HOUSTON, TX 77042 I 713.428.2400
TEXAS ENGINEERING FIRM #470 I TEXAS SURVEYING FIRM #10028800

PAPE–DAWSON
2107 CITYWEST BOULEVARD
3RD FLR
HOUSTON, TEXAS 77402
713–428–2400
TX FIRM #470

SURVEYED BY:
PAPE–DAWSON
FB NO. 24–018

THIS DOCUMENT IS RELEASED FOR INTERIM REVIEW UNDER THE AUTHORIZATION OF AMIRHOSSEIN SHOKOUHI, P.E. (#139835) AND IS **NOT TO BE USED FOR CONSTRUCTION.**

CITY OF HOUSTON
HOUSTON PUBLIC WORKS

LIFT STATION REHABILITATION AND RECONSTRUCTION
BEN'S BRANCH, WOODLAND RIDGE, ELMWOOD HILLS, FOREST SHORES, TRAIL RIVER, RIVERLAWN

CIVIL

CONSTRUCTION SIGN

WBS NUMBER	FOR CITY OF HOUSTON USE ONLY
R–000267–0180–3	
DRAWING SCALE	
AS NOTED	
CITY OF HOUSTON PM	
BRENDA JOHNSON P.E.	
SHEET NO. 006 OF 338	

GC–01

FILE PATH: K:\Projects\423\77 COH LS Package\00\03 CADD\Plans\Sheets\01 General\GC–01 CONSTRUCTION SIGN.dwg

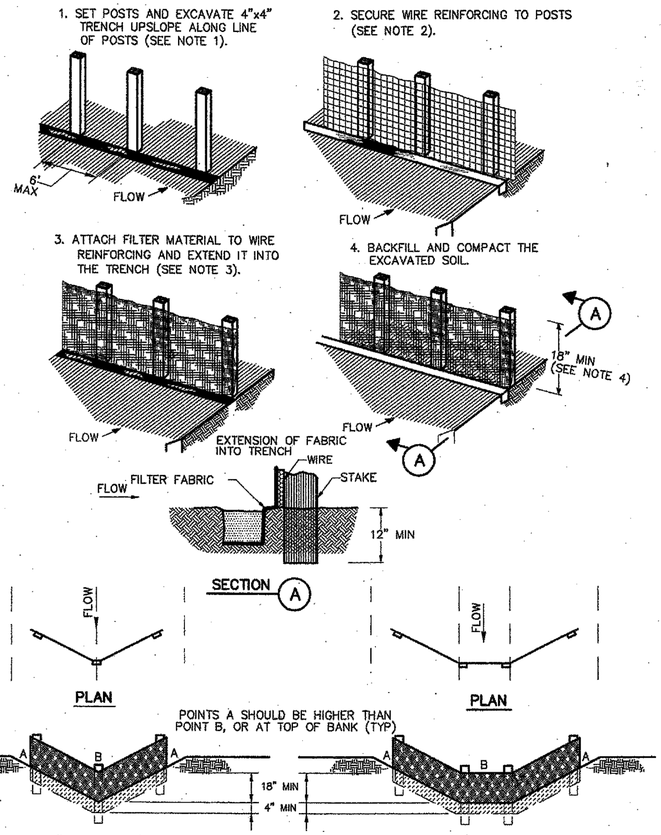

CONSTRUCTION NOTES:

1. SET 2 INCH THICK BY 2 INCH WOODEN STAKES SPACED A MAX OF 6 FEET APART AND EMBEDDED A MIN OF 12 INCHES.
2. WOVEN WIRE REINFORCING TO BE FASTENED SECURELY TO BARRIER POSTS WITH STAPLES.
3. FILTER CLOTH TO BE FASTENED SECURELY TO WOVEN WIRE REINFORCING, WITH TIES SPACED EVERY 24 INCHES AT TOP AND MIDSECTION.
4. MINIMUM HEIGHT OF FILTER SHOULD BE 18 INCHES AND A MAXIMUM OF 36 INCHES ABOVE NATURAL GROUND.
5. WHEN TWO SECTIONS OF FILTER CLOTH ADJOIN EACH OTHER THEY SHALL BE OVERLAPPED 6 INCHES AT THE POSTS, AND FOLDED.
6. SEE COH STANDARD SPECIFICATION FOR FILTER FABRIC BARRIER.

SYMBOL

REINFORCED FILTER FABRIC BARRIER

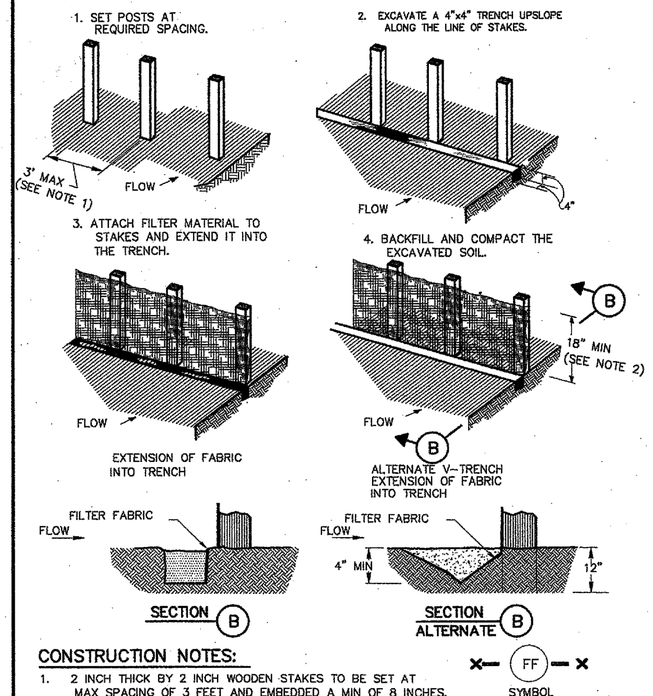

CONSTRUCTION NOTES:

1. 2 INCH THICK BY 2 INCH WOODEN STAKES TO BE SET AT MAX SPACING OF 3 FEET AND EMBEDDED A MIN OF 8 INCHES. IF PREASSEMBLED BARRIER WITH SUPPORT NETTING IS USED, SPACING OF POST MAY BE INCREASED TO 8 FEET MAX.
2. ATTACH FILTER FABRIC TO WOODEN STAKES. FILTER FABRIC BARRIER SHALL HAVE A MIN HEIGHT OF 18 INCHES AND MAX HEIGHT OF 36 INCHES ABOVE NATURAL GROUND.
3. WHEN TWO SECTIONS OF FILTER CLOTH ADJOIN EACH OTHER THEY SHOULD BE OVERLAPPED 6 INCHES AT THE POSTS, AND FOLDED.
4. SEE COH STANDARD SPECIFICATION FOR FILTER FABRIC BARRIER.

SYMBOL

FILTER FABRIC BARRIER

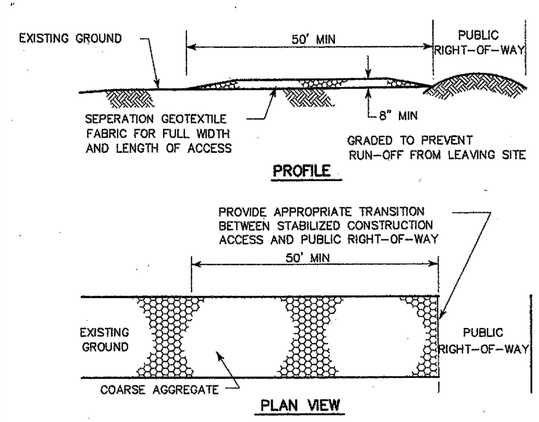

CONSTRUCTION NOTES:

1. LENGTH SHALL BE AS SHOWN ON THE CONSTRUCTION DRAWINGS, BUT NOT LESS THAN 50 FEET.
2. THICKNESS SHALL BE NOT LESS THAN 8 INCHES.
3. WIDTH SHALL BE NOT LESS THAN FULL WIDTH OF ALL POINTS OF INGRESS OR EGRESS.
4. STABILIZATION FOR OTHER AREAS SHALL HAVE THE SAME AGGREGATE THICKNESS AND WIDTH REQUIREMENTS AS THE STABILIZED CONSTRUCTION ACCESS, UNLESS OTHERWISE SHOWN ON THE CONSTRUCTION DRAWINGS.
5. STABILIZED AREA MAY BE WIDENED OR LENGTHENED TO ACCOMODATE A WASHING AREA. AN OUTLET SEDIMENT TRAP MUST BE PROVIDED FOR THE WASHING AREA.
6. COH STANDARD SPECIFICATION FOR STABILIZED CONSTRUCTION ACCESS.
7. STABILIZED CONSTRUCTION ACCESS SHALL BE MAINTAINED FREE OF SEDIMENT FOR THE DURATION OF THE PROJECT.

SYMBOL

STABILIZED CONSTRUCTION ACCESS

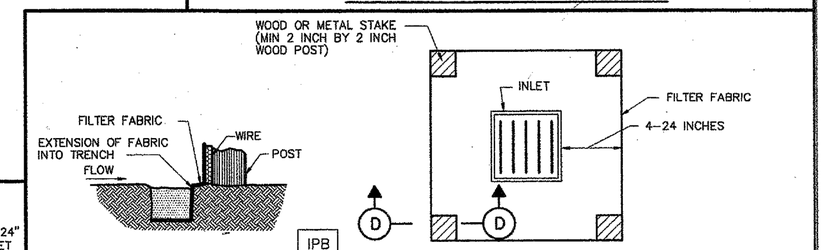

SILT FENCE INLET PROTECTION BARRIER

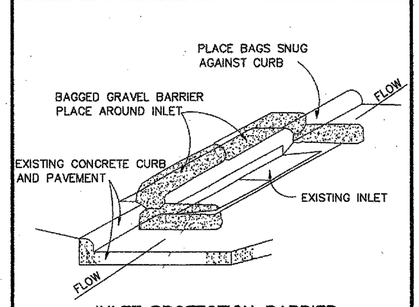

INLET PROTECTION BARRIER

(FOR STAGE II INLETS)
BAGGED GRAVEL BARRIER

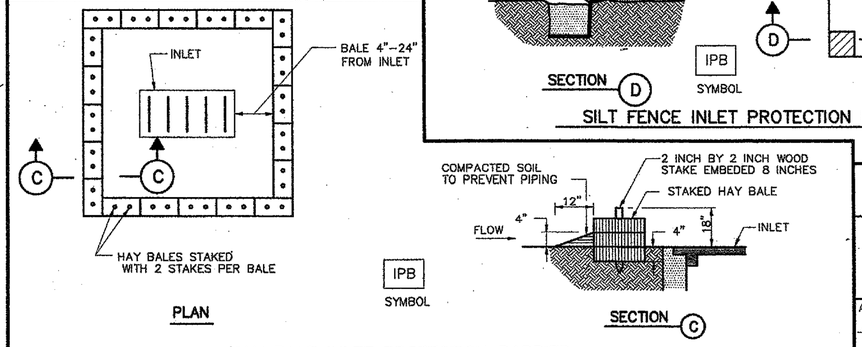

HAY BALE INLET PROTECTION BARRIER

CITY OF HOUSTON
DEPARTMENT OF PUBLIC WORKS AND ENGINEERING

STORM WATER POLLUTION PREVENTION PLAN DETAILS

(NOT TO SCALE)

APPROVED BY: CITY ENGINEER
APPROVED BY: DIRECTOR OF PUBLIC WORKS AND ENGINEERING
EFF DATE: JULY-01-2010
DWG NO: 01571-01

NO.	DATE	REVISION	APP.

PAPE-DAWSON
2107 CITYWEST BLVD, 3RD FLR I HOUSTON, TX 77042 I 713.428.2400
TEXAS ENGINEERING FIRM #470 I TEXAS SURVEYING FIRM #10028800

PAPE-DAWSON
2107 CITYWEST BOULEVARD 3RD FLR
HOUSTON, TEXAS 77402
713-428-2400
TX FIRM #470

SURVEYED BY:
PAPE-DAWSON
FB NO. 24-018

THIS DOCUMENT IS RELEASED FOR INTERIM REVIEW UNDER THE AUTHORIZATION OF AMIRHOSSEIN SHOKOUHI, P.E. (#139835) AND IS **NOT TO BE USED FOR CONSTRUCTION.**

CITY OF HOUSTON
HOUSTON PUBLIC WORKS

LIFT STATION REHABILITATION AND RECONSTRUCTION
BEN'S BRANCH, WOODLAND RIDGE, ELMWOOD HILLS, FOREST SHORES, TRAIL RIVER, RIVERLAWN

CIVIL

STORM WATER POLLUTION PREVENTION PLAN DETAILS

WBS NUMBER	FOR CITY OF HOUSTON USE ONLY
R-000267-0180-3	
DRAWING SCALE	
AS NOTED	
CITY OF HOUSTON PM	
BRENDA JOHNSON P.E.	
SHEET NO. 007 OF 338	

GC-02

FILE PATH: K:\Projects\423\77 COH LS Package\00\03 CADD\Plans\Sheets\01 General\SWPP DETAILS.dwg

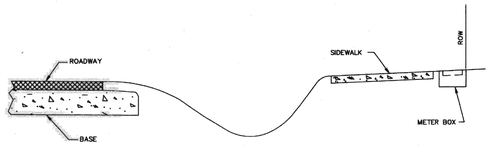

OPEN DITCH STREET

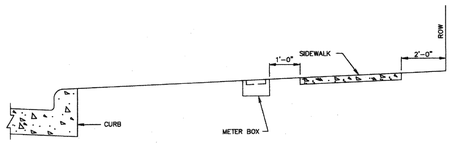

CURB STREET

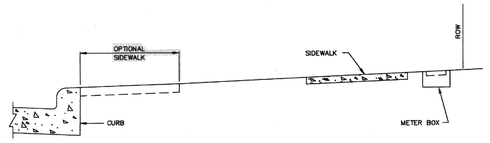

CURB STREET

CITY OF HOUSTON
DEPARTMENT OF PUBLIC WORKS AND ENGINEERING

LOCATION OF WATER METER BOX FOR 2" DIAMETER AND LESS

APPROVED BY: CITY ENGINEER | APPROVED BY: DIRECTOR PUBLIC WORKS AND ENGINEERING

EFF DATE: JUL-01-2010 | DWG NO: 02085-02

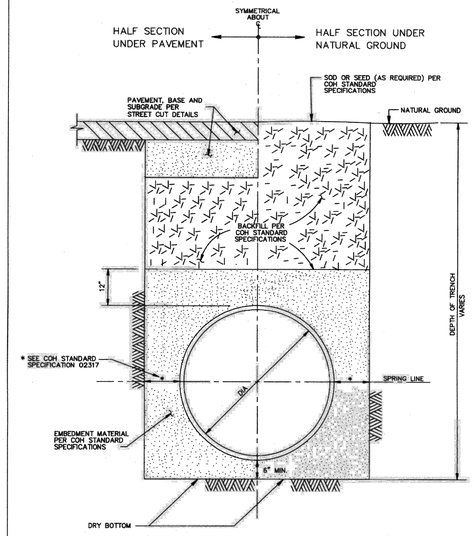

CITY OF HOUSTON
DEPARTMENT OF PUBLIC WORKS AND ENGINEERING

WATER DISTRIBUTION MAIN BEDDING AND BACKFILL FOR OPEN CUT TRENCHES
(NOT TO SCALE)

APPROVED BY: CITY ENGINEER | APPROVED BY: DIRECTOR OF PUBLIC WORKS AND ENGINEERING

EFF DATE: JUL-01-2010 | DWG NO: 02317-04

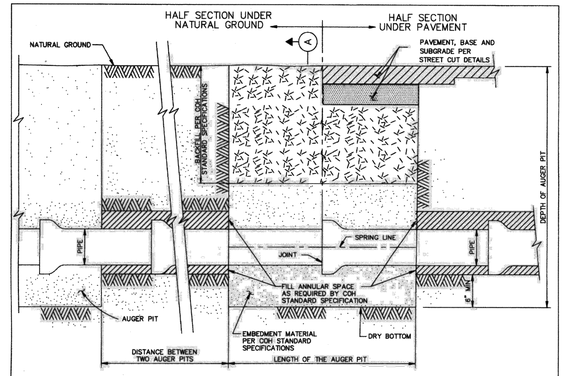

ELEVATION

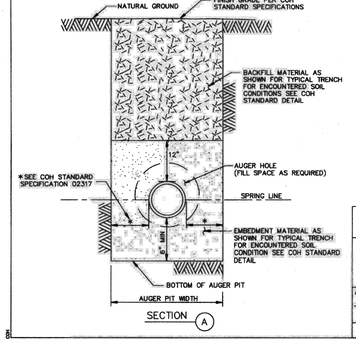

SECTION (A)

NOTE:

1. SELECT BACKFILL FOR RIGID PAVEMENT; FLEXIBLE BASE MATERIAL FOR ASPHALT PAVEMENT.

CITY OF HOUSTON
DEPARTMENT OF PUBLIC WORKS AND ENGINEERING

BEDDING AND BACKFILL AUGER PIT AND AUGER HOLE
(NOT TO SCALE)

APPROVED BY: CITY ENGINEER | APPROVED BY: DIRECTOR PUBLIC WORKS AND ENGINEERING

EFF DATE: JUL-01-2010 | DWG NO: 02447-01

NO.	DATE	REVISION	APP.

PIPE TAPPING SCHEDULE

WATER MAIN TYPE AND DIAMETER	SERVICE SIZE 3/4"	1"	1 1/2"	2"
4" CAST IRON OR DUCTILE IRON	DSS, WBSS	DSS, WBSS	DSS, WBSS	DSS, WBSS
4" ASBESTOS (EXISTING) CEMENT	WBSS	WBSS	DSS, WBSS	DSS, WBSS
4" PVC (AWWA C900)	DSS, WBSS	DSS, WBSS	DSS, WBSS	DSS, WBSS
6" AND 8" CAST IRON OR DUCTILE IRON	DSS, WBSS	DSS, WBSS	DSS, WBSS	DSS, WBSS
6" AND 8" ASBESTOS (EXISTING) CEMENT	DSS, WBSS	DSS, WBSS	DSS, WBSS	DSS, WBSS
6" AND 8" CAST IRON OR DUCTILE IRON	DSS, WBSS	DSS, WBSS	DSS, WBSS	DSS, WBSS
6" AND 8" PVC (AWWA C900)	DSS, WBSS	DSS, WBSS	DSS, WBSS	DSS, WBSS
12" CAST IRON OR DUCTILE IRON	DSS, WBSS	DSS, WBSS	DSS, WBSS	DSS, WBSS
12" ASBESTOS (EXISTING) CEMENT	DSS, WBSS	DSS, WBSS	DSS, WBSS	DSS, WBSS
12" PVC (AWWA C900)	DSS, WBSS	DSS, WBSS	DSS, WBSS	DSS, WBSS
16" AND UP CAST IRON OR DUCTILE IRON	DWBSS	DWBSS	DWBSS	DWBSS
16" AND UP ASBESTOS (EXISTING) CEMENT	DWBSS	DWBSS	DWBSS	DWBSS
16" AND UP PVC (AWWA C900)	DWBSS	DWBSS	DWBSS	DWBSS

DSS – DUAL STRAP SADDLES
WBSS – WIDE BAND STRAP SADDLES
DWBSS – DUAL WIDE BAND STRAP SADDLES

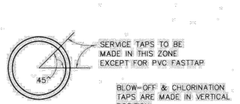

CITY OF HOUSTON
DEPARTMENT OF PUBLIC WORKS AND ENGINEERING

SERVICE TAPS
(NOT TO SCALE)

APPROVED BY: CITY ENGINEER | APPROVED BY: DIRECTOR OF PUBLIC WORKS AND ENGINEERING

EFF DATE: JUL-01-2010 | DWG NO: 02512-02

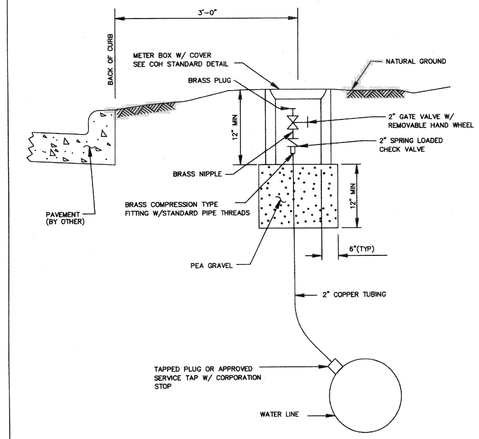

GENERAL NOTES:

1. PLACE GATE VALVE VERTICAL TO GROUND WITH END OF BRASS PLUG 3 INCHES FROM SURFACE
2. PLACE METER BOX CENTER AROUND GATE VALVE BOX WITH LONG SIDE PARALLEL TO VALVE.

CITY OF HOUSTON
DEPARTMENT OF PUBLIC WORKS AND ENGINEERING

PERMANENT BLOW-OFF-DETAIL
(NOT TO SCALE)

APPROVED BY: CITY ENGINEER | APPROVED BY: DIRECTOR OF PUBLIC WORKS AND ENGINEERING

EFF DATE: JULY-01-2010 | DWG NO: 02524-01

PAPE-DAWSON
2107 CITYWEST BLVD, 3RD FLR I HOUSTON, TX 77042 I 713.428.2400
TEXAS ENGINEERING FIRM #470 I TEXAS SURVEYING FIRM #10028800

PAPE-DAWSON
2107 CITYWEST BOULEVARD
3RD FLR
HOUSTON, TEXAS 77402
713-428-2400
TX FIRM #470

SURVEYED BY:
PAPE-DAWSON
FB NO. 24-018

THIS DOCUMENT IS RELEASED FOR INTERIM REVIEW UNDER THE AUTHORIZATION OF AMIRHOSSEIN SHOKOUHI, P.E. (#139835) AND IS **NOT TO BE USED FOR CONSTRUCTION.**

CITY OF HOUSTON
HOUSTON PUBLIC WORKS

LIFT STATION REHABILITATION AND RECONSTRUCTION
BEN'S BRANCH, WOODLAND RIDGE, ELMWOOD HILLS, FOREST SHORES, TRAIL RIVER, RIVERLAWN

CIVIL

WATER LINE DETAILS I

WBS NUMBER	FOR CITY OF HOUSTON USE ONLY
R-000267-0180-3	
DRAWING SCALE	
AS NOTED	
CITY OF HOUSTON PM	
BRENDA JOHNSON P.E.	
SHEET NO. 008 OF 338	

GC-03

FILE PATH: K:\Projects\423\77 COH LS Package\00\03 CADD\Plans\Sheets\01 General\WATER LINE DETAILS.dwg

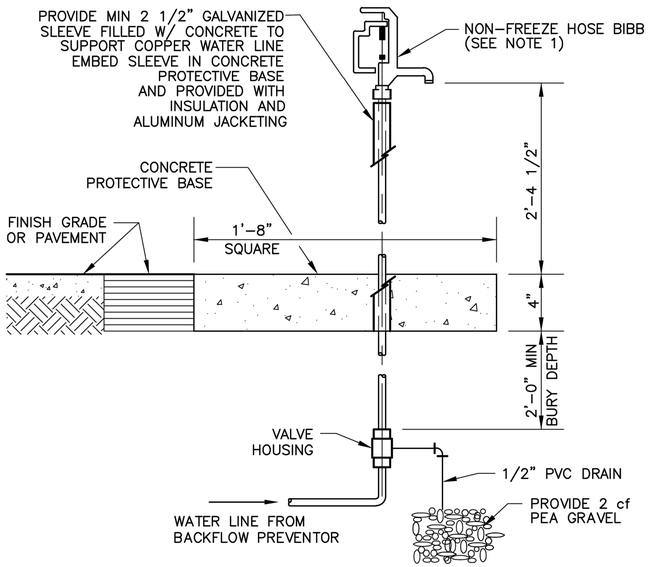

TYP NON-FREEZE HOSE BIBB DETAIL

NOTES:

1. PROVIDE WARNING SIGN WHEN HOSE BIBB IS USED FOR POTABLE WATER.
2. LICENSED PLUMBER TO ACQUIRE CERTIFICATION AND SUBMIT TO THE CITY FOR DOCUMENTATION

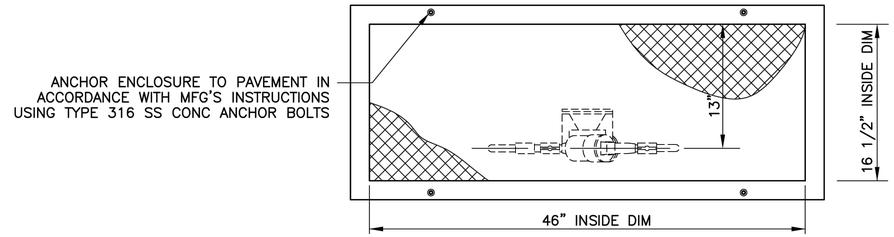

PLAN VIEW

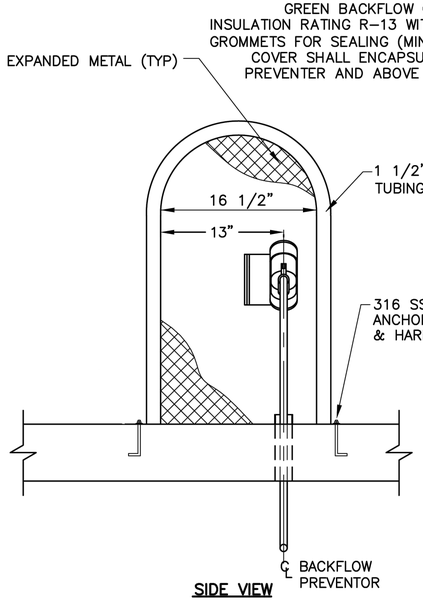

SIDE VIEW

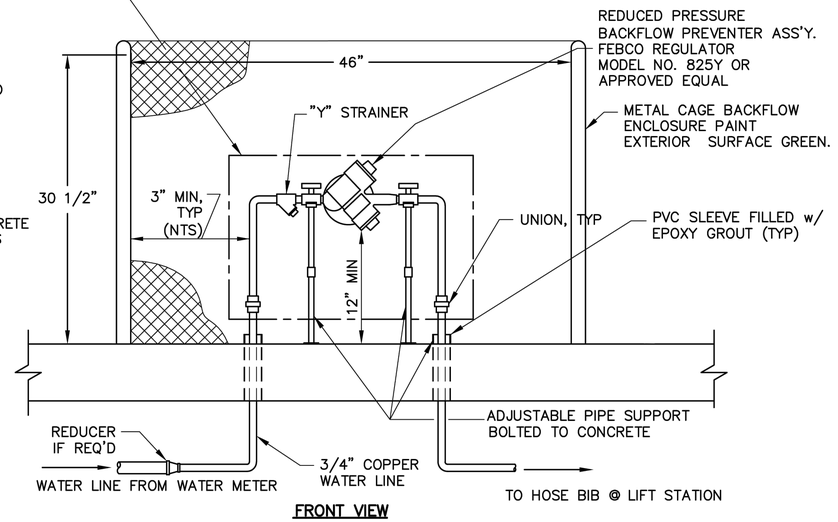

FRONT VIEW

OPEN CAGE REDUCED PRESSURE BACKFLOW PREVENTER INSTALLATION

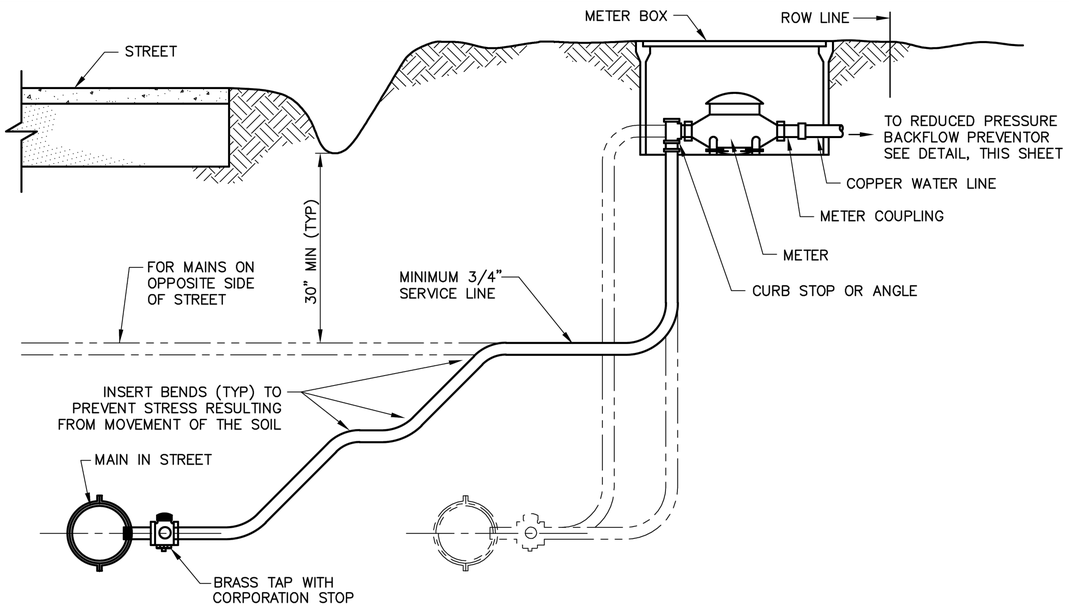

TYP WATER SERVICE LINE SECTION & METER SET DETAIL

PAPE-DAWSON
2107 CITYWEST BLVD, 3RD FLR I HOUSTON, TX 77042 I 713.428.2400
TEXAS ENGINEERING FIRM #470 I TEXAS SURVEYING FIRM #10028800

PAPE-DAWSON
2107 CITYWEST BOULEVARD
3RD FLR
HOUSTON, TEXAS 77402
713-428-2400
TX FIRM #470

SURVEYED BY:
PAPE-DAWSON
FB NO. 24-018

THIS DOCUMENT IS RELEASED FOR INTERIM REVIEW UNDER THE AUTHORIZATION OF AMIRHOSSEIN SHOKOUHI, P.E. (#139835) AND IS **NOT TO BE USED FOR CONSTRUCTION.**

CITY OF HOUSTON
HOUSTON PUBLIC WORKS

LIFT STATION REHABILITATION AND RECONSTRUCTION
BEN'S BRANCH, WOODLAND RIDGE, ELMWOOD HILLS, FOREST SHORES, TRAIL RIVER, RIVERLAWN

CIVIL

WATER LINE DETAILS II

WBS NUMBER	FOR CITY OF HOUSTON USE ONLY
R-000267-0180-3	
DRAWING SCALE	
AS NOTED	
CITY OF HOUSTON PM	
BRENDA JOHNSON P.E.	
SHEET NO. 009 OF 338	

GC-04

NO.	DATE	REVISION	APP.

FILE PATH: K:\Projects\423\77 COH LS Package\00\03 CADD\Plans\Sheets\01 General\WATER LINE DETAILS.dwg

DocuSign Envelope ID: CB71C116-B716-4899-A5EE-0D2F2CC55AF6

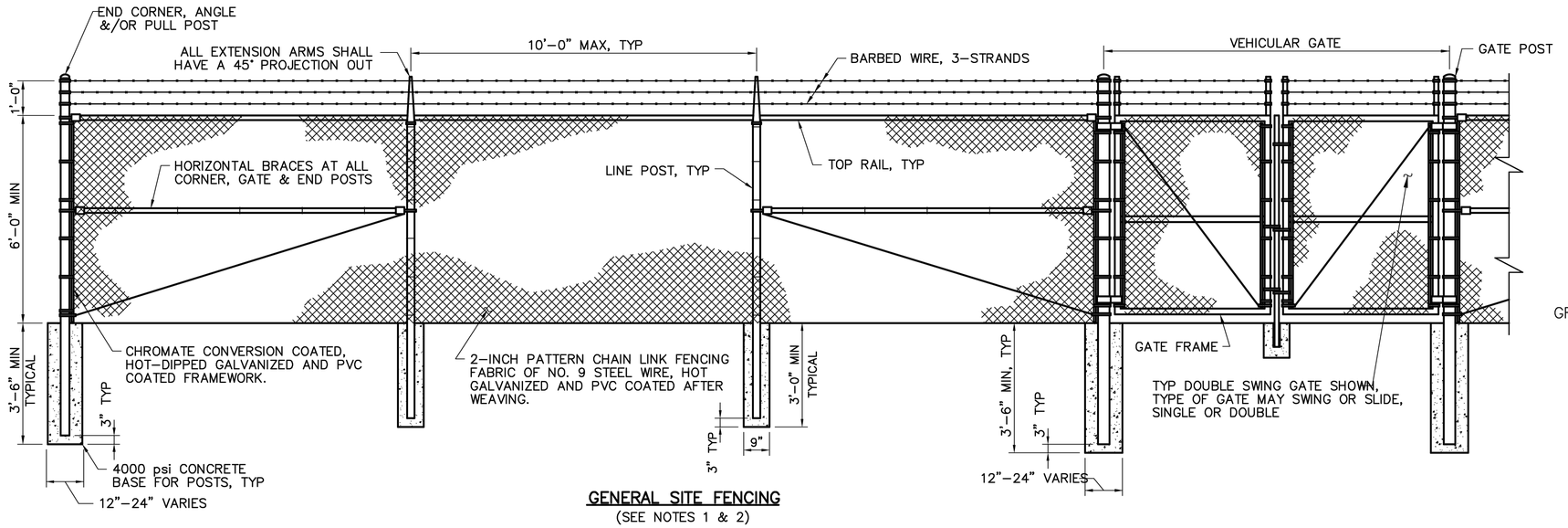

GENERAL SITE FENCING
(SEE NOTES 1 & 2)

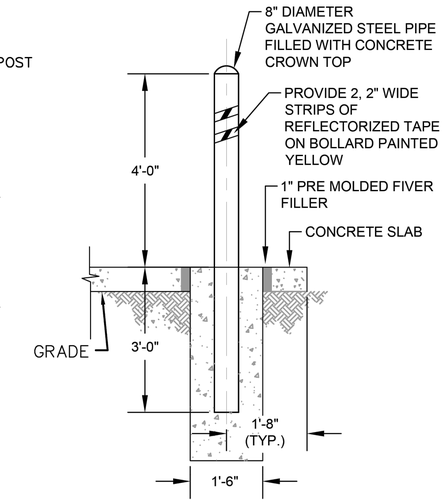

BOLLARD DETAIL

NOTES:
1. ALL FENCING SHALL BE MANUFACTURED AND INSTALLED PER SPECIFICATIONS.
2. PROVIDE DARK GREEN PVC COATED FENCE FABRIC, POSTS AND HARDWARE. PROVIDE DARK GREEN PVC FENCE SLATS.

NO.	DATE	REVISION	APP.

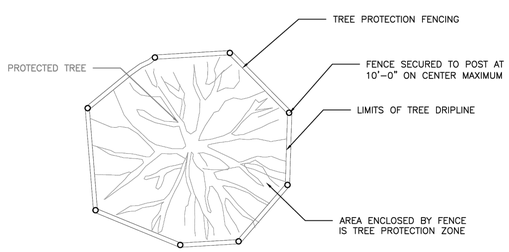

PLAN VIEW
TREE PROTECTION FENCING DETAIL

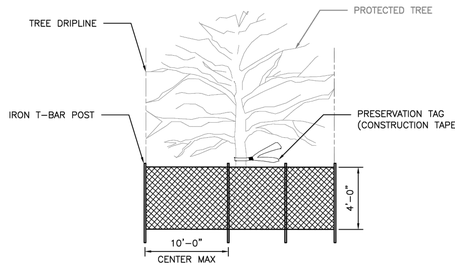

FRONT VIEW
TREE PROTECTION FENCING DETAIL

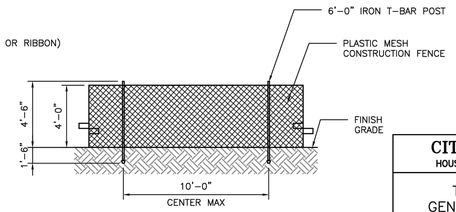

DETAIL B-4
PROTECTIVE PLASTIC MESH FENCE

NOTES:

FENCE LOCATION MAY BE ADJUSTED TO ACTUAL SITE CONDITIONS.

DISCLAIMER:
THE USE OF THIS STANDARD IS GOVERNED BY THE TEXAS ENGINEERING PRACTICE ACT. THE DESIGN REQUIREMENTS ON THIS STANDARD DO NOT PURPORT TO ADDRESS ALL OF THE SAFETY CONCERNS ASSOCIATED WITH THEIR USE. THE ENGINEER OF RECORD (EOR) IS TO REVIEW THESE DESIGN REQUIREMENTS AND BY AUTHORIZING THEIR USE ACCEPTS RESPONSIBILITY FOR ADDRESSING ALL SAFETY CONCERNS ASSOCIATED WITH THEIR USE ON THE PROJECT. THE CITY OF HOUSTON IS NOT RESPONSIBLE FOR ANY OMISSIONS BY THE EOR. THE EOR IS RESPONSIBLE FOR COMPLIANCE WITH ALL APPLICABLE LAWS AND REGULATIONS. THE EOR SHALL INDEMNIFY AND HOLD HARMLESS THE CITY OF HOUSTON AND ITS OFFICERS AND EMPLOYEES FROM ANY SUITS OR CLAIMS FOR DAMAGES RESULTING FROM THE PERFORMANCE OR NON-PERFORMANCE OF THE EOR'S OBLIGATIONS UNDER THIS AGREEMENT. WHETHER SUCH PERFORMANCE OR NON-PERFORMANCE BE BY THE EOR OR BY ANYONE DIRECTLY OR INDIRECTLY EMPLOYED BY THE EOR. THE EOR'S INDEMNITY OBLIGATION SHALL NOT BE LIMITED BY ANY PROVISION OF INSURANCE. WHICH MAY BE REQUIRED BY THIS AGREEMENT. WHETHER OR NOT SUCH INSURANCE SHALL BE VALID OR ENFORCEABLE. THE CITY OF HOUSTON ASSUMES NO RESPONSIBILITY FOR INCORRECT RESULTS OR DAMAGES RESULTING FROM ITS USE.

CITY OF HOUSTON HOUSTON PUBLIC WORKS STANDARD	
TREE PROTECTION GENERAL REQUIREMENTS (SCALE: NOT TO SCALE)	
APPROVED BY:	
DocuSigned by: Sukut Kanwar CITY ENGINEER	DocuSigned by: Carl Haddock DIRECTOR OF HPW
EFF DATE: NOV-27-2023	DWG NO: 01562-01

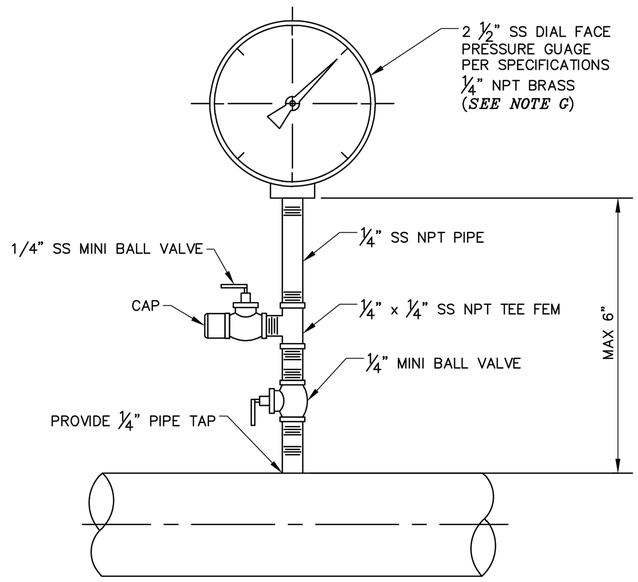

1. ALL FITTINGS SHALL BE STAINLESS STEEL (316)

PRESSURE GAUGE DETAIL

PAPE-DAWSON
2107 CITYWEST BLVD, 3RD FLR I HOUSTON, TX 77042 I 713.428.2400
TEXAS ENGINEERING FIRM #470 I TEXAS SURVEYING FIRM #10028800

PAPE-DAWSON
2107 CITYWEST BOULEVARD
3RD FLR
HOUSTON, TEXAS 77402
713-428-2400
TX FIRM #470

SURVEYED BY:
PAPE-DAWSON
FB NO. 24-018

THIS DOCUMENT IS RELEASED FOR INTERIM REVIEW UNDER THE AUTHORIZATION OF AMIRHOSSEIN SHOKOUHI, P.E. (#139835) AND IS **NOT TO BE USED FOR CONSTRUCTION.**

CITY OF HOUSTON
HOUSTON PUBLIC WORKS

LIFT STATION REHABILITATION AND RECONSTRUCTION
BEN'S BRANCH, WOODLAND RIDGE, ELMWOOD HILLS, FOREST SHORES, TRAIL RIVER, RIVERLAWN

CIVIL

SITE DETAILS

WBS NUMBER	FOR CITY OF HOUSTON USE ONLY
R-000267-0180-3	
DRAWING SCALE	
AS NOTED	
CITY OF HOUSTON PM	
BRENDA JOHNSON P.E.	
SHEET NO. 010 OF 338	

GC-05

FILE PATH: K:\Projects\423\77 COH LS Package\00\03 CADD\Plans\Sheets\01 General\CIVIL DETAILS.dwg

DocuSign Envelope ID: 9B122261-CF05-457B-9A65-2650F40B66D5

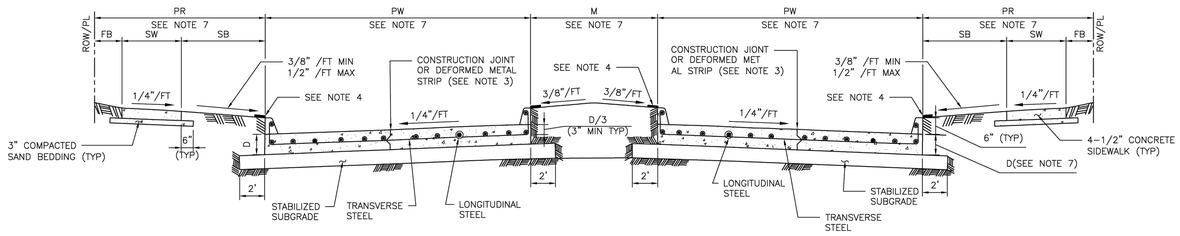

TYPICAL DOUBLE ROADWAY SECTION FOR CONCRETE PAVEMENT WITH CURBS

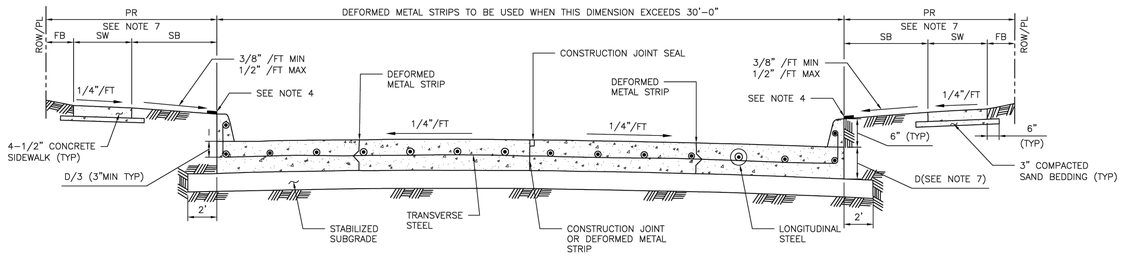

TYPICAL SINGLE ROADWAY SECTION FOR CONCRETE PAVEMENT WITH CURBS

TABLE 1

REINFORCING STEEL BAR SIZES AND SPACINGS FOR VARIOUS PAVEMENT THICKNESSES (D) WITH: MAXIMUM TRANSVERSE CONTROL JOINT SPACING = 20'-0"
MAXIMUM EXPANSION JOINT SPACING = 80'-0"
fc' = 4,000 PSI/28 DAYS AND FY = 60,000 PSI

PAVEMENT THICKNESS 'D' (IN)	PAVEMENT WIDTH 'PW' (FT)	LONGITUDINAL STEEL									TRAVERSE STEEL		
		#4 BARS			#5 BARS			#6 BARS			#4 BARS	#5 BARS	#6 BARS
		NUMBER OF BARS	SPACING (IN)	END BAR SPACING (IN)	NUMBER OF BARS	SPACING (IN)	END BAR SPACING (IN)	NUMBER OF BARS	SPACING (IN)	END BAR SPACING (IN)	SPACING (IN)	SPACING (IN)	SPACING (IN)
6	28	17	20.50	4.00	–	–	–	–	–	–	36	–	–
7	25	17	18.25	4.00	–	–	–	–	–	–	36	–	–
7	35	24	18.00	3.00	–	–	–	–	–	–	36	–	–
7	36	25	17.75	3.00	–	–	–	–	–	–	36	–	–
7	37	25	18.25	3.00	–	–	–	–	–	–	36	–	–
7	41	28	18.00	3.00	–	–	–	–	–	–	36	–	–
7	45	31	17.75	3.75	–	–	–	–	–	–	36	–	–
8	25	20	15.50	2.75	13	24.50	3.0	–	–	–	36	36	–
8	34	27	15.50	2.50	17	25.00	4.0	–	–	–	36	36	–
8	35	27	16.00	2.00	18	24.25	4.0	–	–	–	36	36	–
8	36	28	15.75	3.25	18	25.00	3.0	–	–	–	30	36	–
8	44	24	15.75	4.00	22	24.75	4.0	–	–	–	30	36	–
8	45	35	15.75	2.25	23	24.25	3.0	–	–	–	30	36	–
9	25	22	14.00	3.00	14	22.50	4.0	–	–	–	36	36	–
9	34	31	13.50	2.00	19	22.25	3.5	–	–	–	30	36	–
9	35	31	13.75	3.75	20	21.75	3.5	–	–	–	30	36	–
9	36	32	13.75	3.00	21	21.25	3.5	–	–	–	30	36	–
9	44	39	13.75	2.75	25	21.75	3.0	–	–	–	24	36	–
9	45	39	14.00	4.00	26	21.25	4.5	–	–	–	24	36	–
10	25	24	12.75	3.50	17	18.25	4.0	–	–	–	36	36	36
10	34	33	12.50	4.00	21	20.00	4.0	–	–	–	30	36	36
10	35	34	12.50	3.75	23	18.75	4.0	–	–	–	30	36	36
10	36	35	12.50	3.50	24	18.50	3.0	–	–	–	30	36	36
10	44	44	12.00	4.00	29	18.50	4.5	–	–	–	24	36	36
10	45	44	12.50	3.00	29	19.00	3.0	–	–	–	24	36	36
11	25	27	11.25	3.00	17	18.25	4.0	12	26.75	3	36	36	36
11	34	36	11.50	2.75	24	17.50	2.5	17	25.00	4	24	36	36
11	35	37	11.50	3.00	24	18.00	3.0	17	25.75	4	24	36	36
11	36	40	11.00	2.00	25	17.75	3.0	17	26.50	4	24	36	36
11	44	48	11.125	2.50	30	18.00	3.0	21	26.00	4	24	36	36
11	45	49	11.125	3.00	31	17.75	4.0	22	25.50	3	24	36	36
12	25	–	–	–	19	16.25	4.0	13	24.50	3	36	36	36
12	34	–	–	–	26	16.00	4.0	18	23.50	4	24	36	36
12	35	–	–	–	26	16.50	4.0	19	23.00	3	24	36	36
12	36	–	–	–	27	16.25	4.5	20	22.25	4.5	24	36	36
12	44	–	–	–	33	16.25	4.0	24	22.50	5	24	30	36
12	45	–	–	–	35	15.75	3.0	25	22.25	3	24	30	36

MINIMUM LAP LENGTH (L):
A. # 4 BARS ; L = 22 INCHES
B. # 5 BARS ; L = 27 INCHES
C. # 6 BARS ; L = 32 INCHES

NOTES:

1. THE MAXIMUM WIDTH BETWEEN LONGITUDINAL JOINTS SHALL NOT EXCEED 15'-0".
2. ALL EARTHEN AREAS ARE TO BE HYDROMULCHED UNLESS SHOWN OTHERWISE ON DRAWINGS.
3. CONTRACTOR MAY SAW CUT IN LIEU OF DEFORMED METAL STRIP.
4. USE STRIP OF SOD GRASS TO PREVENT EROSION UNTIL STAND OF GRASS IS ESTABLISHED.
5. AN EQUAL OR LARGER AREA OF WELDED REINFORCEMENT BAR CONFORMING TO ASTM A497, MAY BE SUBSTITUTED FOR REBARS LISTED IN TABLE 1.
6. IF AVAILABLE ROW IS NOT SUFFICIENT TO ACCOMMODATE SIDEWALK WIDTH (SW) ACCORDING TO IDM REQUIREMENTS, ENGINEER SHALL OBTAIN A VARIANCE FROM THE CITY ENGINEER.
7. REFER TO CONTRACT DRAWINGS FOR PAVEMENT WIDTH (PW) AND PAVEMENT THICKNESS (D), MEDIAN (M), PEDESTRIAN REALM (PR), SIDEWALK (SW), FRONTAGE BUFFER (FB), AND SAFETY BUFFER (SB) WIDTHS.

NO.	DATE	REVISION	APP.

APPROVED BY:	APPROVED BY:
DocuSigned by: Sukut Kanwar 9EFB80C641F5478...	DocuSigned by: KEHING NGUYEN 96A295FDA7584CD...
CITY ENGINEER	CITY TRAFFIC ENGINEER
APPROVED BY: DocuSigned by: Carol Haddock ABDC41B1182A4A3...	
DIRECTOR OF HOUSTON PUBLIC WORKS	
EFF DATE: NOV-27-2023	DWG NO: 02751-01

CITY OF HOUSTON
HOUSTON PUBLIC WORKS STANDARD

CONCRETE PAVEMENT DETAILS

	FOR CITY OF HOUSTON USE ONLY
DRAWING SCALE	
NOT TO SCALE	

PAPE-DAWSON
2107 CITYWEST BLVD, 3RD FLR I HOUSTON, TX 77042 I 713.428.2400
TEXAS ENGINEERING FIRM #470 I TEXAS SURVEYING FIRM #10028800

PAPE-DAWSON
2107 CITYWEST BOULEVARD
3RD FLR
HOUSTON, TEXAS 77402
713-428-2400
TX FIRM #470

SURVEYED BY:
PAPE-DAWSON
FB NO. 24-018

THIS DOCUMENT IS RELEASED FOR INTERIM REVIEW UNDER THE AUTHORIZATION OF AMIRHOSSEIN SHOKOUHI, P.E. (#139835) AND IS **NOT TO BE USED FOR CONSTRUCTION.**

CITY OF HOUSTON
HOUSTON PUBLIC WORKS

LIFT STATION REHABILITATION AND RECONSTRUCTION
BEN'S BRANCH, WOODLAND RIDGE, ELMWOOD HILLS, FOREST SHORES, TRAIL RIVER, RIVERLAWN

CIVIL

CONCRETE PAVING DETAILS

WBS NUMBER	FOR CITY OF HOUSTON USE ONLY
R-000267-0180-3	
DRAWING SCALE	
AS NOTED	
CITY OF HOUSTON PM	
BRENDA JOHNSON P.E.	
SHEET NO. 011 OF 338	

GC-06

DISCLAIMER:
THE USE OF THIS STANDARD IS GOVERNED BY THE TEXAS ENGINEERING PRACTICE ACT. THE DESIGN REQUIREMENTS ON THIS STANDARD DO NOT PURPORT TO ADDRESS ALL OF THE SAFETY CONCERNS ASSOCIATED WITH THEIR USE. THE ENGINEER OF RECORD (EOR) IS TO KNOW THESE DESIGN REQUIREMENTS AND BY AUTHORIZING THEIR USE ACCEPTS RESPONSIBILITY FOR THEIR APPLICABILITY, ADEQUACY AND SAFETY AND WARRANTY OF ANY KIND IS MADE BY THE CITY OF HOUSTON FOR ANY PURPOSES WHATSOEVER. THE CITY OF HOUSTON ASSUMES NO RESPONSIBILITY FOR INCORRECT RESULTS OR DAMAGES RESULTING FROM ITS USE.

FILE PATH: K:\Projects\423\77 COH LS Package\00\03 CADD\Plans\Sheets\01 General\CIVIL DETAILS.dwg

DocuSign Envelope ID: CB71C116-B716-4899-A5EE-0D2F2CC55AF6

DISCLAIMER:
THE USE OF THIS STANDARD IS GOVERNED BY THE TEXAS ENGINEERING PRACTICE ACT. THE USER'S REQUIREMENTS ON THIS STANDARD DO NOT PURPORT TO ADDRESS ALL OF THE SAFETY CONCERNS ASSOCIATED WITH THEIR USE. THE ENGINEER OF RECORD (EOR) IS TO REVIEW THESE DESIGN REQUIREMENTS AND BY AUTHORIZING THEIR USE, ACCEPTS RESPONSIBILITY FOR THEIR APPROPRIATE, ADEQUACY AND SAFETY. NO WARRANTY OF ANY KIND IS MADE BY THE CITY OF HOUSTON FOR ANY PURPOSES WHATSOEVER. THE CITY OF HOUSTON ASSUMES NO RESPONSIBILITY FOR INCORRECT RESULTS OR DAMAGES RESULTING FROM ITS USE.

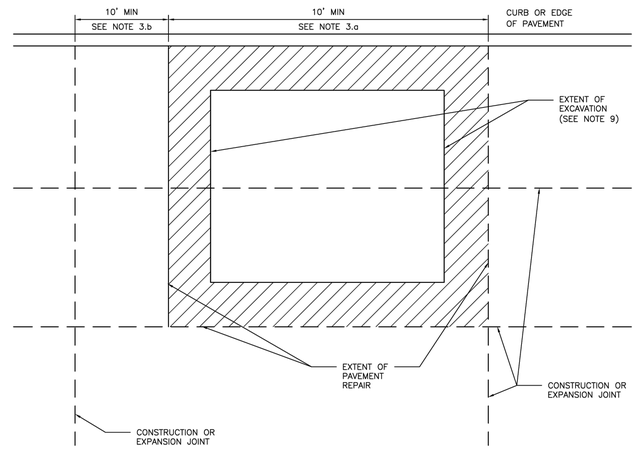

NOTES:

1. EXTENT OF PAVEMENT REPAIR SHALL BE PERPENDICULAR AND PARALLEL TO TRAVEL WAY.
2. WIDTH:
   REPLACE PANEL WIDTH TO NEAREST CONSTRUCTION OR EXPANSION JOINT BEYOND EDGE OF EXCAVATION.
3. LENGTH:
   a. MINIMUM LENGTH OF PAVEMENT REPAIR ALONG TRAVEL WAY IS 10' FROM THE NEAREST JOINT.
   b. IF EXTENT OF PAVEMENT REPAIR IS LESS THAN 10' FROM EXISTING CONSTRUCTION OR EXPANSION JOINT, EXTEND PAVEMENT REPAIR TO EXISTING JOINT.
4. SAW CUT AND EXPOSE 15" OF REINFORCING STEEL AROUND EDGE OF PANEL REPLACEMENT. PROVIDE HORIZONTAL DOWELS (PER SPECIFICATION SECTION 02951—PAVEMENT REPAIR AND RESTORATION) IF REINFORCING IS BROKEN OFF OR DOES NOT EXIST.
5. REPLACE CURB WHEN ADJACENT LANE IS REPLACED.
6. MAINTAIN EXPANSION JOINTS AT EXISTING LOCATIONS UNLESS OTHERWISE DIRECTED BY CITY ENGINEER.
7. SPECIALTY PAVEMENTS (IE: BRICK PAVERS) TO BE REPLACED WITH MATCHING PAVEMENT IN ALL CASES.
8. REPLACE PAVEMENT MARKINGS IN ACCORDANCE WITH CITY OF HOUSTON STANDARD SPECIFICATIONS 02764—RAISED PAVEMENT MARKERS AND 02767—THERMOPLASTIC PAVEMENT MARKINGS.
9. EXTENT OF EXCAVATION INCLUDES 18" OVERCUT AS SHOWN ON STANDARD DETAIL 02951—04 PAVEMENT REPAIR DETAIL FOR STREET CUTS (FLEX—BASE PAVEMENT & CONCRETE PAVEMENT).

CITY OF HOUSTON
HOUSTON PUBLIC WORKS STANDARD

STREET CUT FOR CONCRETE PAVEMENT REPLACEMENT/RESTORATION AGE OF PAVEMENT > 5YRS
(SCALE: NOT TO SCALE)

APPROVED BY:

DocuSigned by: Sukul kanwar — CITY ENGINEER
DocuSigned by: Carl Haddock — DIRECTOR OF HPW
DocuSigned by: KHANG NGUYEN — CITY TRAFFIC ENGINEER

EFF DATE: NOV-27-2023 | DWG NO: 02951-02

NO.	DATE	REVISION	APP.

DocuSign Envelope ID: 9B122261-CF05-457B-9A65-2650F40B66D5

DISCLAIMER:
THE USE OF THIS STANDARD IS GOVERNED BY THE TEXAS ENGINEERING PRACTICE ACT. THE USER'S REQUIREMENTS ON THIS STANDARD DO NOT PURPORT TO ADDRESS ALL OF THE SAFETY CONCERNS ASSOCIATED WITH THEIR USE. THE ENGINEER OF RECORD (EOR) IS TO REVIEW THESE DESIGN REQUIREMENTS AND BY AUTHORIZING THEIR USE, ACCEPTS RESPONSIBILITY FOR THEIR APPROPRIATE, ADEQUACY AND SAFETY. NO WARRANTY OF ANY KIND IS MADE BY THE CITY OF HOUSTON FOR ANY PURPOSES WHATSOEVER. THE CITY OF HOUSTON ASSUMES NO RESPONSIBILITY FOR INCORRECT RESULTS OR DAMAGES RESULTING FROM ITS USE.

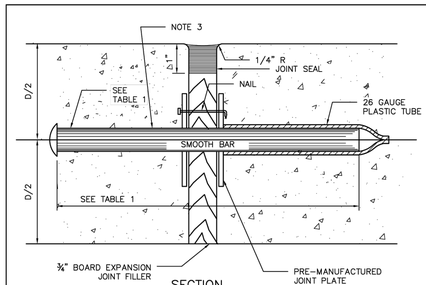

SECTION

DOWEL TYPE EXPANSION JOINT

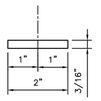

PLAN VIEW

JOINT PLATE

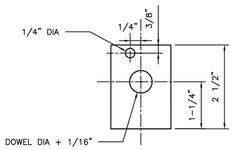

ELEVATION VIEW

JOINT PLATE

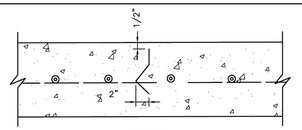

SECTION

DEFORMED METAL STRIP

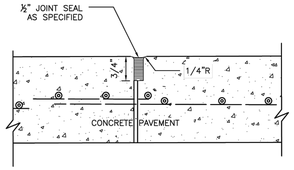

SECTION

CONSTRUCTION JOINT SEAL

TABLE 1

PAVEMENT THICKNESS (IN)	DOWEL SIZES AND SPACINGS		
	DIAMETER (IN)	LENGTH (IN)	SPACING (IN)
6	3/4	18	12
7	1	18	12
8	1	18	12
9	1 1/4	18	12
10	1 1/4	18	12
11	1 1/4	18	12
12	1 1/4	18	12

NOTES:

1. STEEL TO MEET ASTM STANDARD SPECIFICATIONS FOR CONCRETE REINFORCING BARS. UNITS TO BE SPACED 12" CENTER ON CENTER.
2. EXPANSION JOINT TO BE PLACED AT THE END OF EACH CURB RADIUS.
3. CENTER DOWEL HORIZONTALLY ON JOINT.
4. CENTER DOWEL VERTICALLY IN CONCRETE BASE. EXTEND THICKENED CONCRETE AS NEEDED TO MAINTAIN 3" MIN COVER.
5. CITY OF HOUSTON APPROVED PRODUCTS MAY BE USED AS JOINT PLATE ALTERNATIVE.

CITY OF HOUSTON
HOUSTON PUBLIC WORKS STANDARD

PAVEMENT EXPANSION AND CONSTRUCTION JOINT DETAILS
(SCALE: NOT TO SCALE)

APPROVED BY:

DocuSigned by: Sukul kanwar — CITY ENGINEER
DocuSigned by: Carl Haddock — DIRECTOR OF HPW
DocuSigned by: KHANG NGUYEN — CITY TRAFFIC ENGINEER

EFF DATE: NOV-27-2023 | DWG NO: 02752-01

PAPE-DAWSON
2107 CITYWEST BLVD, 3RD FLR I HOUSTON, TX 77042 I 713.428.2400
TEXAS ENGINEERING FIRM #470 I TEXAS SURVEYING FIRM #10028800

PAPE-DAWSON
2107 CITYWEST BOULEVARD
3RD FLR
HOUSTON, TEXAS 77402
713-428-2400
TX FIRM #470

SURVEYED BY:
PAPE-DAWSON
FB NO. 24-018

THIS DOCUMENT IS RELEASED FOR INTERIM REVIEW UNDER THE AUTHORIZATION OF AMIRHOSSEIN SHOKOUHI, P.E. (#139835) AND IS **NOT TO BE USED FOR CONSTRUCTION.**

CITY OF HOUSTON
HOUSTON PUBLIC WORKS

LIFT STATION REHABILITATION AND RECONSTRUCTION
BEN'S BRANCH, WOODLAND RIDGE, ELMWOOD HILLS, FOREST SHORES, TRAIL RIVER, RIVERLAWN

CIVIL

PAVEMENT DETAILS

WBS NUMBER	FOR CITY OF HOUSTON USE ONLY
R-000267-0180-3	
DRAWING SCALE	
AS NOTED	
CITY OF HOUSTON PM	
BRENDA JOHNSON P.E.	
SHEET NO. 012 OF 338	

GC-07

FILE PATH: K:\Projects\423\77 COH LS Package\00\03 CADD\Plans\Sheets\01 General\CIVIL DETAILS.dwg

DocuSign Envelope ID: 9B122261-CF05-457B-9A65-2650F40B66D5

DISCLAIMER:
THE USE OF THIS STANDARD IS GOVERNED BY THE TEXAS ENGINEERING PRACTICE ACT. THE DESIGN REQUIREMENTS ON THIS STANDARD DO NOT PURPORT TO ADDRESS ALL OF THE SAFETY CONCERNS ASSOCIATED WITH THEIR USE. THE ENGINEER OF RECORD (EOR) IS TO REVIEW THESE DESIGN REQUIREMENTS AND BY AUTHORIZING THEIR USE, ACCEPTS RESPONSIBILITY FOR THEIR APPLICABILITY, ADEQUACY AND SAFETY; NO WARRANTY OF ANY KIND IS MADE BY THE CITY OF HOUSTON FOR ANY PURPOSES WHATSOEVER. THE CITY OF HOUSTON ASSUMES NO RESPONSIBILITY FOR INCORRECT RESULTS OR DAMAGES RESULTING FROM ITS USE.

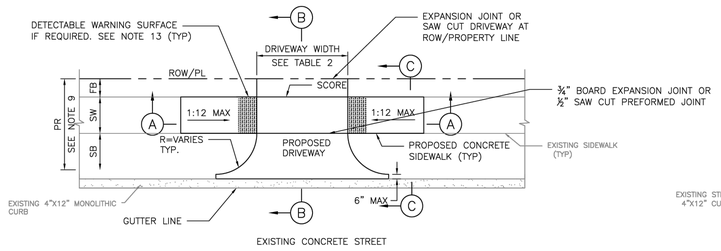

PLAN VIEW
DRIVEWAY

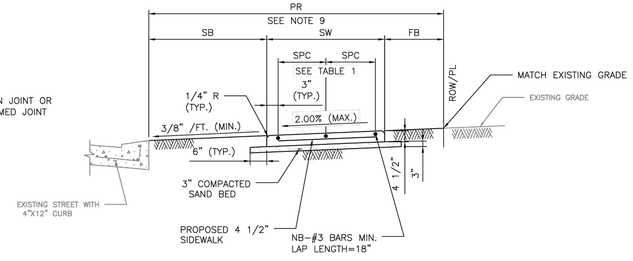

SECTION C–C
TYPICAL SIDEWALK SECTION

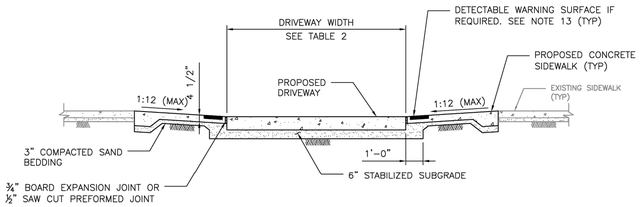

SECTION A–A
PROPOSED SIDEWALK, THROUGH DRIVEWAY WITH EXCESSIVE GRADES

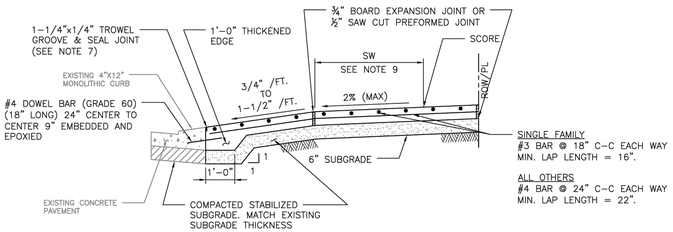

SECTION B–B
TYPICAL DRIVEWAY SECTION

NOTES:

1. REPAIR, RECONSTRUCTION OR REPLACEMENT OF SIDEWALKS SHALL MEET PERMITTING REQUIREMENTS OF CODE OF ORDINANCES SECTION 40–552.
2. FOR REPAIR, RECONSTRUCTION, OR REPLACEMENT OF EXISTING SIDEWALKS:
   - 2.1. EXISTING SIDEWALKS LESS THAN OR EQUAL TO 20 FEET IN TOTAL LENGTH:
     - 2.1.1. THE PROPOSED SIDEWALK WIDTH WILL BE ALLOWED TO MATCH THE EXISTING SIDEWALK.
   - 2.2. EXISTING SIDEWALKS GREATER THAN 20 FEET IN TOTAL LENGTH:
     - 2.2.1. THE SIDEWALK WIDTH FOR THE ENTIRE PROPERTY WIDTH SHALL BE IMPROVED TO MEET WIDTH REQUIREMENTS ACCORDING TO THE LATEST INFRASTRUCTURE DESIGN MANUAL.
   - 2.3. 20 FOOT TOTAL LENGTH IS DEFINED AS:
     - 2.3.1. UP TO 10 FEET ON BOTH SIDES OF THE DRIVEWAY; OR
     - 2.3.2. UP TO 20 FEET WHEN SIDEWALK AFFECTED IS LOCATED ONLY ON ONE SIDE OF THE DRIVEWAY.
3. IF AVAILABLE ROW IS NOT SUFFICIENT TO ACCOMMODATE SIDEWALK WIDTH (SW) ACCORDING TO IDM REQUIREMENTS, ENGINEER SHALL OBTAIN A VARIANCE FROM THE CITY ENGINEER.
4. DRIVEWAYS SHALL BE 6" THICK FOR SINGLE FAMILY OR DUPLEXES.
5. DRIVEWAYS AND SIDEWALKS SHALL BE CONSTRUCTED WITH PORTLAND CEMENT CONCRETE AND INCLUDE 5 1/2 SACKS OF CEMENT PER CUBIC YARD OF CONCRETE.
6. THE OUTER DOWEL BARS ARE TO BE LOCATED 12" FROM END OF PROPOSED EDGE OF DRIVEWAY RETURN. EXTEND DOWEL 3" INCHES INTO PROPOSED DRIVEWAY AND BEND REMAINING BAR TO EXTEND TO RADIUS RETURN BOTH SIDES.
7. TROWEL GROOVE SEALANT SHALL BE LOW MODULUS SILICONE OR POLYURETHANE SEALANT.
8. ALL JOINTS ALONG THE SIDEWALK SHALL BE CONSTRUCTED ACCORDING TO DRAWING 02752–02 AND SPECIFICATION 02752.
9. REFER TO CONTRACT DRAWINGS FOR PEDESTRIAN REALM (PR), SIDEWALK (SW), FRONTAGE BUFFER (FB), AND SAFETY BUFFER (SB) WIDTHS.
10. CEMENT STABILIZED SAND 1.5 SACKS OF CEMENT PER TON OF DRY SAND.
11. ALL RAMPS AND SIDEWALKS/WALKWAYS SHALL BE CONSTRUCTED IN ACCORDANCE WITH HOUSTON PUBLIC WORKS STANDARDS, TEXAS ACCESSIBILITY STANDARDS (TAS) AND AMERICANS WITH DISABILITIES ACT (ADA) REQUIREMENTS. IF THERE IS A CONFLICT IN THE REQUIREMENTS, THE STRICTEST REQUIREMENTS SHALL GOVERN.
12. CURB RAMPS THAT ARE STEEPER THAN A 1:12 MAX SLOPE WILL NOT BE ACCEPTED BY THE CITY OF HOUSTON.
13. DETECTABLE WARNING SURFACES:
    - 13.1. SIDEWALK SHALL HAVE A DETECTABLE WARNING SURFACE WHERE:
      - 13.1.1. SIDEWALK INTERSECTS TYPE C DRIVEWAYS (COMMERCIAL DRIVEWAYS) THAT ARE STOP, YIELD OR TRAFFIC SIGNAL CONTROLLED; OR
      - 13.1.2. SIDEWALK SLOPE IS GREATER THAN 1:20 AND INTERSECTS A TYPE C DRIVEWAY (COMMERCIAL DRIVEWAY)
    - 13.2. DETECTABLE WARNING SURFACES ARE OPTIONAL WHERE SIDEWALKS INTERSECT TYPE A DRIVEWAYS (SINGLE FAMILY RESIDENTIAL HOUSES OR DUPLEXES) OR TYPE B DRIVEWAYS (SHARED ACCESS/SHARED DRIVEWAYS).
    - 13.3. REFER TO STANDARD DETAILS 02775–06 TO 02775–07 FOR DETECTABLE WARNING SURFACE STANDARDS.

TABLE 1

REINFORCING STEEL INFORMATION
FOR 4 ½ " THICK SIDEWALKS
EXPANSION JOINT SPACING = 40 FT
fc' = 3,500 PSI AND fy = 60,000 PSI
REFER TO CONTRACT DRAWINGS FOR SIDEWALKS WIDER THAN 6 FEET.

SIDEWALK THICKNESS (IN)	SIDEWALK WIDTH (FT)	LONGITUDINAL STEEL			TRANSVERSE STEEL #3 BARS SPACING (IN)
		#3 BARS			
		NO. OF BARS "NB"	SPACING "SPC" (IN)	END BAR SPACING (IN)	
4.5	5	3	27	3	48
4.5	6	4	22	3	48

TABLE 2

DRIVEWAY DESIGN CRITERIA (1)(2)

TRAFFIC TYPE	TYPE A DRIVEWAY (FOR SINGLE FAMILY RESIDENTIAL HOUSES OR DUPLEXES)				TYPE B DRIVEWAY (SHARED ACCESS/SHARED DRIVEWAY)				TYPE C DRIVEWAY (COMMERCIAL DRIVEWAY)			
	WIDTH (FT)		RADIUS (FT)		WIDTH (FT)		RADIUS (FT)		WIDTH (FT)		RADIUS (FT)	
	MIN	MAX	MIN	MAX	MIN	MAX	MIN	MAX	MIN	MAX	MIN	MAX
ONE–WAY	10	12	4	10	12(5)	16(5)	4(5)	10(5)	15	20	10	20
TWO–WAY	10(3)	24(4)	4	10	16(6)	24	4	10	24	35	10	20

(1) REFER TO INFRASTRUCTURE DESIGN MANUAL ARTICLE 15.2.07.C.1.F FOR DRIVEWAYS THAT REQUIRE A VEHICLE SWEPT PATH ANALYSIS.
(2) REFER TO INFRASTRUCTURE DESIGN MANUAL ARTCILES 15.2.07.C.1.G.(1) AND 15.2.07.C.1.G.(2) FOR TYPE 1 PAE AND TYPE 2 PAE REQUIREMENTS.
(3) THE MINIMUM WIDTH FOR JOINT ACCESS DRIVEWAY IS 12 FT.
(4) REFER TO CHAPTER 42 OF THE CODE OF ORDINANCES FOR DRIVEWAY WIDTHS FOR NARROW LOTS.
(5) ONLY MURS AND COURTYARD STYLE DEVELOPMENTS ON CORNER LOTS CAN HAVE ONE–WAY DRIVEWAYS.
(6) REFER TO CHAPTER 42, SECTION 42–146 OF THE CODE OF ORDINANCES FOR EXCEPTIONS TO THE MINIMUM DRIVEWAY WIDTH FOR SHARED DRIVEWAYS.

NO.	DATE	REVISION	APP.

APPROVED BY:	APPROVED BY:
DocuSigned by: Sulail Kanwar — 9E7B5BC0641F5479...	DocuSigned by: HUNG NGUYEN — 95A2BEFDA7594C0...
CITY ENGINEER	CITY TRAFFIC ENGINEER
APPROVED BY: DocuSigned by: Carol Haddock — A2EA1987B2B4A1...	
DIRECTOR OF HOUSTON PUBLIC WORKS	
EFF DATE: NOV–27–2023	DWG NO: 02754–01A

CITY OF HOUSTON
HOUSTON PUBLIC WORKS STANDARD

DRIVEWAY DETAIL WITH 4"x12" CURB FOR LOCAL RESIDENTIAL STREETS

FOR CITY OF HOUSTON USE ONLY

DRAWING SCALE
NOT TO SCALE

PAPE–DAWSON
2107 CITYWEST BLVD, 3RD FLR I HOUSTON, TX 77042 I 713.428.2400
TEXAS ENGINEERING FIRM #470 I TEXAS SURVEYING FIRM #10028800

PAPE–DAWSON
2107 CITYWEST BOULEVARD
3RD FLR
HOUSTON, TEXAS 77402
713–428–2400
TX FIRM #470

SURVEYED BY:
PAPE–DAWSON
FB NO. 24–018

THIS DOCUMENT IS RELEASED FOR INTERIM REVIEW UNDER THE AUTHORIZATION OF AMIRHOSSEIN SHOKOUHI, P.E. (#139835) AND IS **NOT TO BE USED FOR CONSTRUCTION.**

CITY OF HOUSTON
HOUSTON PUBLIC WORKS

LIFT STATION REHABILITATION AND RECONSTRUCTION
BEN'S BRANCH, WOODLAND RIDGE, ELMWOOD HILLS, FOREST SHORES, TRAIL RIVER, RIVERLAWN

CIVIL

DRIVEWAY

WBS NUMBER	FOR CITY OF HOUSTON USE ONLY
R–000267–0180–3	
DRAWING SCALE	
AS NOTED	
CITY OF HOUSTON PM	
BRENDA JOHNSON P.E.	
SHEET NO. 013 OF 338	

GC–08

FILE PATH: K:\Projects\423\77 COH LS Package\00\03 CADD\Plans\Sheets\01 General\CIVIL DETAILS.dwg

TYPE 1 OPEN PICK HOLE

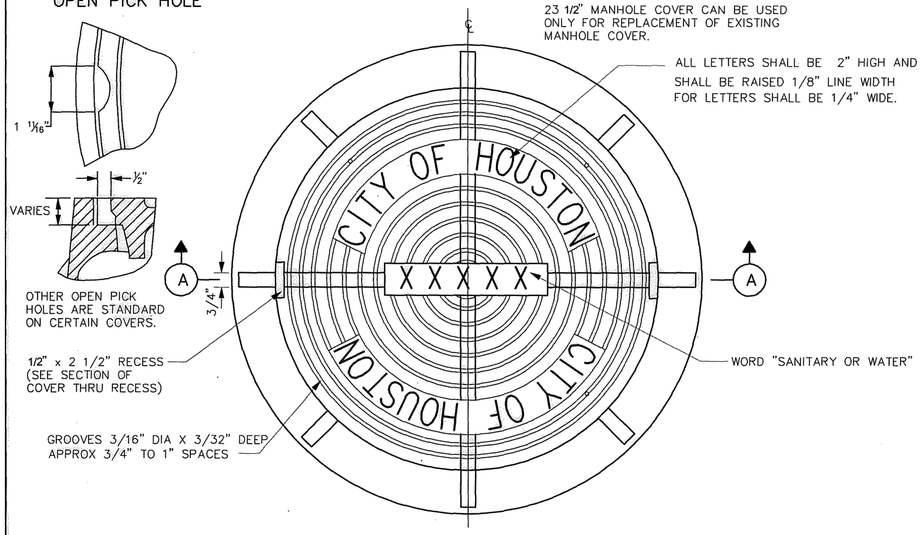

PLAN

NOTE:
23 1/2" MANHOLE COVER CAN BE USED ONLY FOR REPLACEMENT OF EXISTING MANHOLE COVER.

ALL LETTERS SHALL BE 2" HIGH AND SHALL BE RAISED 1/8" LINE WIDTH FOR LETTERS SHALL BE 1/4" WIDE.

23 1/2" MANHOLE COVER WITH FRAME

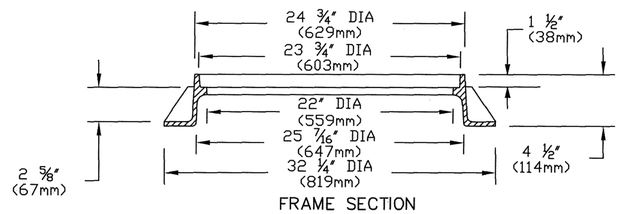

FRAME SECTION

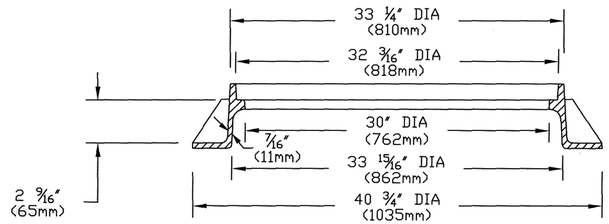

SECTION A

32" MANHOLE COVER WITH FRAME

1) NOTE: APPROXIMATE WEIGHTS.
FRAME- 170 LBS 77 kg
COVER- 270 LBS 123 kg
UNIT- 440 LBS 200 kg

2) MATERIAL- GRAY IRON ASTM A48 CL35B

3) CASTING TO MEET M306 PROOF LOAD SPECIFICATION

4) MODEL V-14240 ASY OR APPROVED EQUAL

CITY OF HOUSTON
DEPARTMENT OF PUBLIC WORKS AND ENGINEERING

SANITARY SEWER AND WATER MANHOLE FRAME AND COVER

(NOT TO SCALE)

APPROVED BY: CITY ENGINEER	APPROVED BY: Dale A. Rudick DIRECTOR OF PUBLIC WORKS AND ENGINEERING
EFF DATE: JUL-01-2016	DWG NO: 02090-01

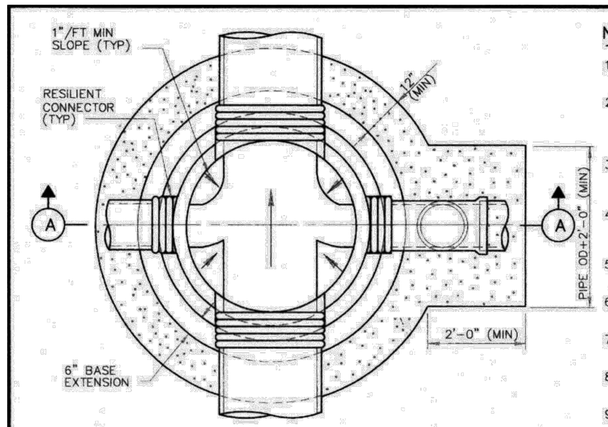

FOUNDATION PLAN

NOTES:

1. DEPTH OF MANHOLE DETERMINES SECTIONS REQUIRED.
2. PRECAST CONCRETE RINGS SHALL BE PROVIDED FOR A COMBINED ADJUSTMENT HEIGHT OF AT LEAST 12". THE TOTAL HEIGHT OF THE ADJUSTMENT RINGS SHALL NOT EXCEED 1'-6".
3. MANHOLE WALL THICKNESS FOR DEPTH EXCEEDING 12'-0" SHALL BE DETERMINED TO MEET LOADING CONDITIONS. MIN THICKNESS 5".
4. MANHOLE DROP AND INTERSECTING PIPES SHALL BE INSTALLED ONLY WHEN CALLED FOR IN PLAN AND PROFILE DRAWING.
5. ALTERNATE ECCENTRIC CONE AND/OR TRANSITION SECTION MAY BE USED.
6. SEAT MANHOLE FRAME IN SEALANT PER COH STANDARD SPECIFICATION.
7. OMIT CEMENT MORTAR WHEN MANHOLE IS LOCATED IN PAVED AREAS.
8. MIN REINFORCING IN THE PRECAST CONCRETE BASE SHALL BE # 5 @ 8 EW.
9. WHERE DIMENSIONAL RESTRICTIONS DICTATE, THE MANHOLE BASE HEIGHT SHALL BE ADJUSTED TO HAVE THE UPPER INLET PIPE OF THE DROP ENTER INTO THE 4'-0" DIAMETER RISER SECTION.

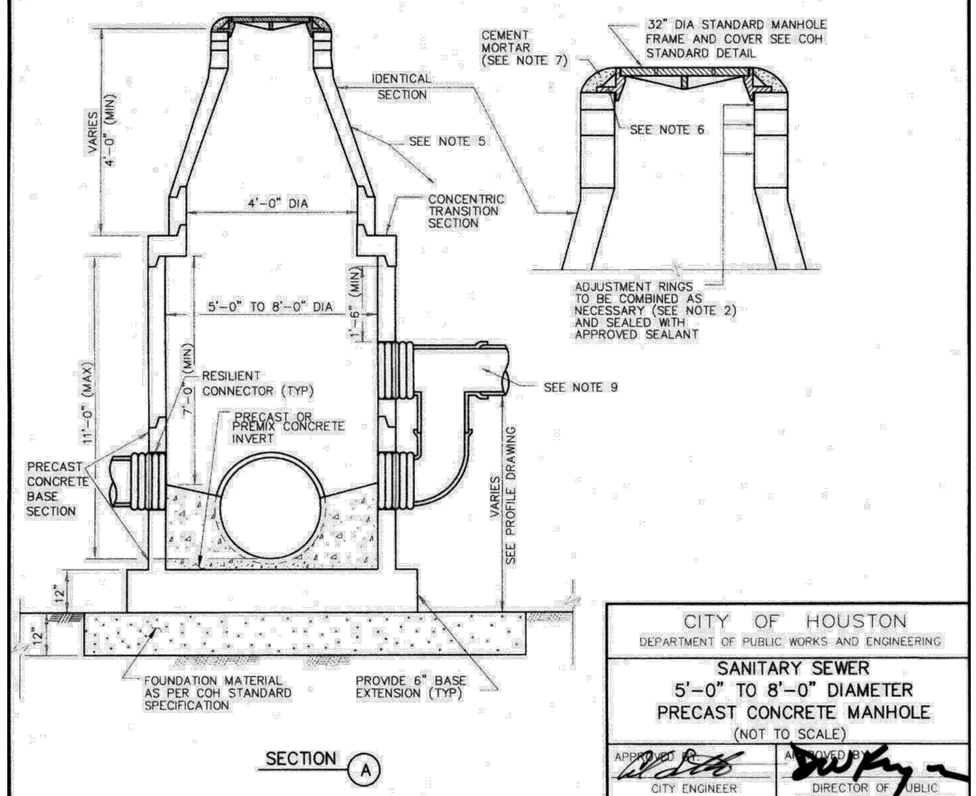

SECTION A

CITY OF HOUSTON
DEPARTMENT OF PUBLIC WORKS AND ENGINEERING

SANITARY SEWER
5'-0" TO 8'-0" DIAMETER
PRECAST CONCRETE MANHOLE

(NOT TO SCALE)

APPROVED BY: CITY ENGINEER	APPROVED BY: DIRECTOR OF PUBLIC WORKS AND ENGINEERING
EFF DATE: JULY-01-2010	DWG NO: 02082-03

NO.	DATE	REVISION	APP.

PAPE-DAWSON
2107 CITYWEST BLVD, 3RD FLR I HOUSTON, TX 77042 I 713.428.2400
TEXAS ENGINEERING FIRM #470 I TEXAS SURVEYING FIRM #10028800

PAPE-DAWSON
2107 CITYWEST BOULEVARD
3RD FLR
HOUSTON, TEXAS 77402
713-428-2400
TX FIRM #470

SURVEYED BY:
PAPE-DAWSON
FB NO. 24-018

THIS DOCUMENT IS RELEASED FOR INTERIM REVIEW UNDER THE AUTHORIZATION OF AMIRHOSSEIN SHOKOUHI, P.E. (#139835) AND IS **NOT TO BE USED FOR CONSTRUCTION.**

CITY OF HOUSTON
HOUSTON PUBLIC WORKS

LIFT STATION REHABILITATION AND RECONSTRUCTION
BEN'S BRANCH, WOODLAND RIDGE, ELMWOOD HILLS, FOREST SHORES, TRAIL RIVER, RIVERLAWN

CIVIL

SANITARY SEWER DETAILS I

WBS NUMBER	FOR CITY OF HOUSTON USE ONLY
R-000267-0180-3	
DRAWING SCALE	
AS NOTED	
CITY OF HOUSTON PM	
BRENDA JOHNSON P.E.	
SHEET NO. 014 OF 338	

GC-09

FILE PATH: K:\Projects\423\77 COH LS Package\00\03 CADD\Plans\Sheets\01 General\CIVIL DETAILS.dwg

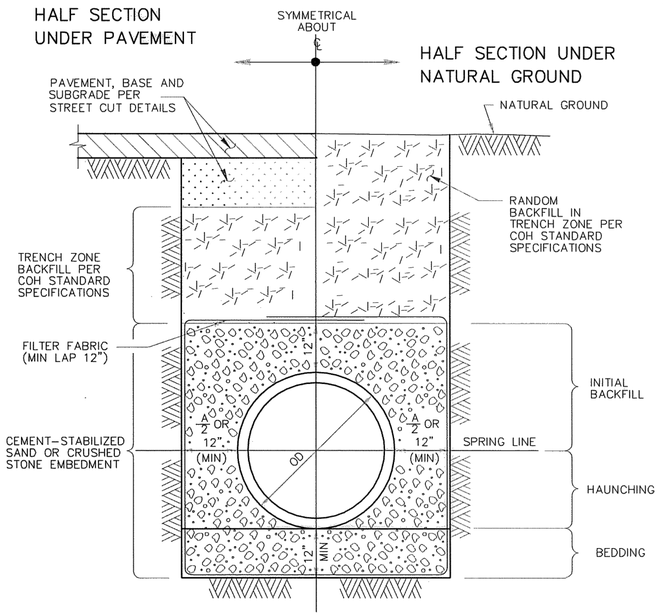

TYPICAL CROSS-SECTION

NOTES:

1. MIN TRENCH WIDTH SHALL BE PIPE OD PLUS AN ALLOWANCE "A" FOR THE NOMINAL PIPE SIZE:

NOMINAL PIPE SIZE	"A"
18" TO 30"	24"
OVER 30"	36"

2. MAX TRENCH WIDTH SHALL BE NOT GREATER THAN MIN TRENCH WIDTH PLUS 24 INCHES, UNLESS OTHERWISE NOTED.
3. TRENCH DAM MAY BE FORMED OR UNFORMED. ACTUAL SHAPE OF CONCRETE TRENCH DAM CROSS SECTION MAY BE DETERMINED BY CONTRACTOR IN FIELD, MEETING MINIMUM THICKNESS AND KEY DEPTH REQUIREMENTS.
4. TRENCH DAM SHALL BE PLACED AT LEAST 5 FT AWAY FROM ANY PIPELINE STRUCTURE. SEE SPECIFICATIONS FOR OTHER REQUIREMENTS.
5. PLACE TRENCH DAMS IN CLASS I EMBEDMENTS AT THE MIDPOINT OF LINE SEGMENTS LONGER THAN 100 FEET BETWEEN MANHOLES.
6. CEMENT-STABILIZED SAND IS PREFERRED FOR EMBEDMENT, BUT CRUSHED STONE MAY BE USED ONLY WHEN SPECIFIED ON THE PLANS.

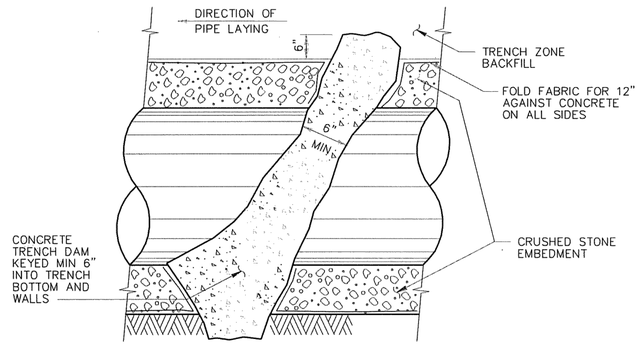

LONGITUDINAL SECTION ALONG PIPE ℄
AT EMBEDMENT TRENCH DAM

CITY OF HOUSTON
DEPARTMENT OF PUBLIC WORKS AND ENGINEERING

SANITARY SEWER EMBEDMENT
AND TRENCH ZONE BACKFILL
FOR DRY OR WET STABLE TRENCH

(NOT TO SCALE)

APPROVED BY: CITY ENGINEER	APPROVED BY: DIRECTOR OF PUBLIC WORKS AND ENGINEERING
EFF DATE: JUL-01-2016	DWG NO: 02317-01

NOTES:

1. GROUTING OF MANHOLE STRUCTURE ANNULAR SPACE WILL BE PERMITTED IN CASES WHERE INSUFFICIENT WORK SPACE EXISTS FOR PLACEMENT AND COMPACTATION OF CEMENT STABILIZED SAND, PER COH STANDARD SPECIFICATION FOR TUNNEL GROUT.
2. THIS DETAIL ALSO APPLIES TO BACKFILL OF SHAFTS WITHOUT STRUCTURES.
3. ARRANGE PIPE JOINTS AS SHOWN WHEN USING RIGID CONNECTION TO CAST IN PLACE MANHOLE BASE.

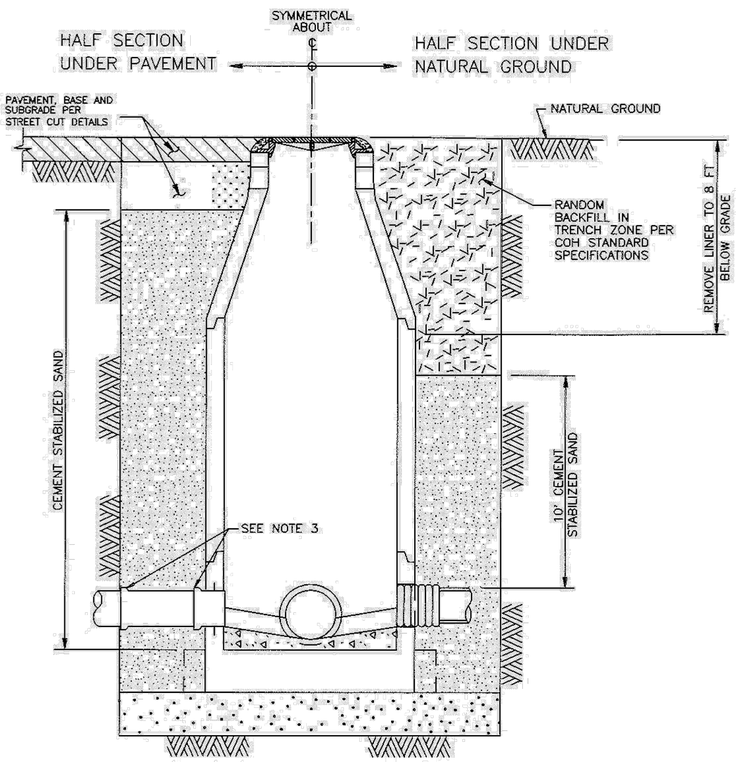

TYPICAL CROSS - SECTION

CITY OF HOUSTON
DEPARTMENT OF PUBLIC WORKS AND ENGINEERING
ENGINEERING, CONSTRUCTION AND REAL ESTATE DIVISION

SANITARY SEWER
BACKFILL OF SHAFTS

(NOT TO SCALE)

APPROVED BY: CITY ENGINEER	APPROVED BY: DIRECTOR OF PUBLIC WORKS AND ENGINEERING
EFF DATE: OCT-01-2002	DWG NO: 02317-08

NO.	DATE	REVISION	APP.

PAPE-DAWSON
2107 CITYWEST BLVD, 3RD FLR I HOUSTON, TX 77042 I 713.428.2400
TEXAS ENGINEERING FIRM #470 I TEXAS SURVEYING FIRM #10028800

PAPE-DAWSON
2107 CITYWEST BOULEVARD
3RD FLR
HOUSTON, TEXAS 77402
713-428-2400
TX FIRM #470

SURVEYED BY:
PAPE-DAWSON
FB NO. 24-018

THIS DOCUMENT IS RELEASED FOR INTERIM REVIEW UNDER THE AUTHORIZATION OF AMIRHOSSEIN SHOKOUHI, P.E. (#139835) AND IS **NOT TO BE USED FOR CONSTRUCTION.**

CITY OF HOUSTON
HOUSTON PUBLIC WORKS

LIFT STATION REHABILITATION AND RECONSTRUCTION
BEN'S BRANCH, WOODLAND RIDGE, ELMWOOD HILLS, FOREST SHORES, TRAIL RIVER, RIVERLAWN

CIVIL

SANITARY SEWER DETIALS II

WBS NUMBER	FOR CITY OF HOUSTON USE ONLY
R-000267-0180-3	
DRAWING SCALE	
AS NOTED	
CITY OF HOUSTON PM	
BRENDA JOHNSON P.E.	
SHEET NO. 015 OF 338	

GC-10

FILE PATH: K:\Projects\423\77 COH LS Package\00\03 CADD\Plans\Sheets\01 General\CIVIL DETAILS.dwg

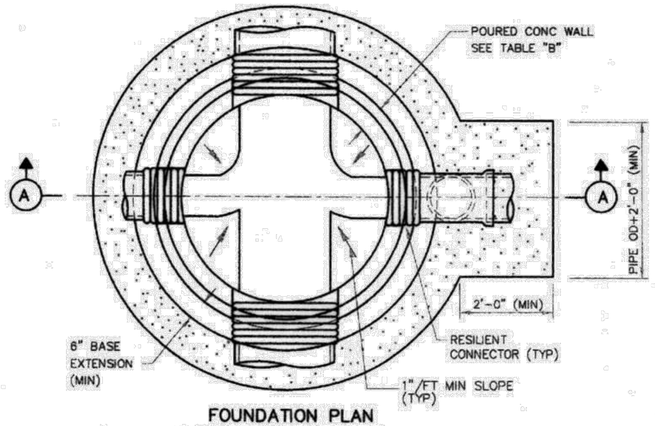

FOUNDATION PLAN

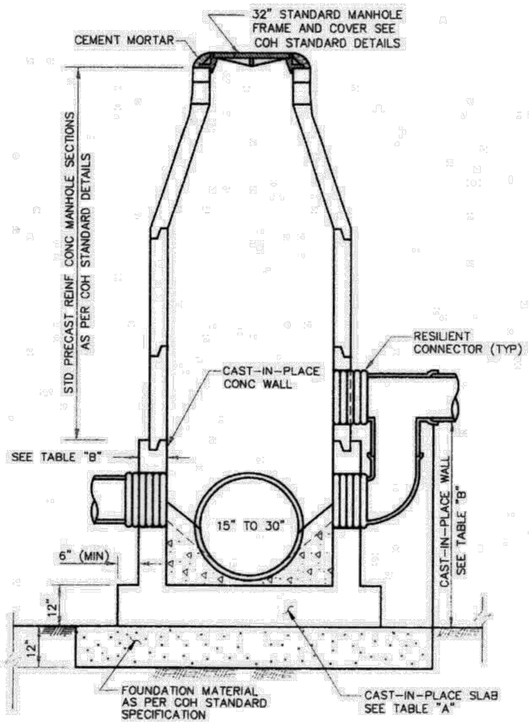

ELEVATION (A)

NOTES:

1. SEAT MANHOLE FRAME IN SEALANT PER COH STANDARD SPECIFICATION.
2. OMIT CEMENT MORTAR WHEN MANHOLE IS LOCATED IN PAVED AREAS.
3. MANHOLE DROP AND INTERSECTING PIPES SHALL BE INSTALLED ONLY WHEN CALLED FOR IN PLAN AND PROFILE DRAWING.

NOTES ON USE OF STANDARD DETAIL

TABLE "A"

BASE SLAB REINFORCING AND THICKNESS

MH INSIDE DIA (FT)	DEPTH TO INV (FT)	BASE THICKNESS	REINFORCING (E W, T & B)
8	≤ 20	1'-0"	# 6 @ 10"
	≤ 25	1'-2"	# 6 @ 8"
	≤ 30	1'-4"	# 6 @ 7"
	≤ 40	1'-6"	# 6 @ 6"
	≤ 50	1'-8"	# 6 @ 6"
	≤ 60	1'-10"	# 6 @ 6"
6	≤ 15	1'-0"	# 5 @ 8"
	≤ 20	1'-0"	# 5 @ 8"
	≤ 25	1'-2"	# 5 @ 7"
	≤ 30	1'-2"	# 5 @ 6"
	≤ 40	1'-2"	# 6 @ 8"
	≤ 50	1'-4"	# 6 @ 8"
	≤ 60	1'-4"	# 6 @ 7"
5	≤ 15	1'-0"	# 5 @ 8"
	≤ 20	1'-0"	# 5 @ 7"
	≤ 25	1'-0"	# 5 @ 6"
	≤ 30	1'-0"	# 6 @ 10"
	≤ 40	1'-2"	# 6 @ 10"
	≤ 50	1'-2"	# 6 @ 9"
	≤ 60	1'-2"	# 6 @ 8"
4	≤ 20	1'-0"	# 5 @ 8"
	≤ 25	1'-0"	# 5 @ 8"
	≤ 30	1'-0"	# 5 @ 7"
	≤ 40	1'-0"	# 6 @ 10"

TABLE "B"

WALL REINFORCING AND THICKNESS

MH INSIDE DIA (FT)	DEPTH TO PIPE TO INV (FT)	MAXIMUM CAST-IN-PLACE WALL HEIGHT	WALL THICKNESS	REINFORCING AT EACH FACE	
				VERTICAL	HORIZONTAL
8	≤ 20	6'-0"	0'-10"	# 6 @ 12"	# 6 @ 12"
	≤ 25	6'-6"	0'-10"	# 6 @ 10"	
	≤ 30	7'-0"	0'-10"	# 6 @ 8"	
	≤ 40	8'-0"	1'-0"	# 6 @ 8"	
	≤ 50	9'-0"	1'-2"	# 6 @ 6"	
	≤ 60	10'-0"	1'-4"	# 6 @ 6"	
6	≤ 15	5'-0"	0'-8"	# 5 @ 12"	# 5 @ 12"
	≤ 20	5'-6"	0'-8"	# 5 @ 8"	
	≤ 25	6'-0"	0'-9"	# 5 @ 8"	
	≤ 30	6'-0"	0'-9"	# 5 @ 6"	# 5 @ 8"
	≤ 40	7'-0"	0'-10"	# 5 @ 8"	
	≤ 50	7'-0"	1'-0"	# 6 @ 8"	
	≤ 60	8'-0"	1'-2"	# 6 @ 7"	
5	≤ 15	5'-0"	0'-8"	# 5 @ 8"	# 4 @ 12"
	≤ 20	5'-4"	0'-8"	# 5 @ 7"	
	≤ 25	5'-8"	0'-10"	# 5 @ 6"	
	≤ 30	6'-0"	0'-10"	# 6 @ 10"	# 5 @ 12"
	≤ 40	6'-4"	0'-10"	# 6 @ 10"	
	≤ 50	6'-8"	1'-0"	# 6 @ 8"	
	≤ 60	7'-0"	1'-0"	# 6 @ 8"	
4	≤ 20	4'-6"	0'-8"	# 5 @ 12"	# 4 @ 12"
	≤ 25	5'-0"	0'-8"	# 5 @ 10"	
	≤ 30	5'-6"	0'-10"	# 6 @ 12"	
	≤ 40	6'-0"	0'-10"	# 6 @ 12"	

NOTE TO SPECIFIER:

1. TABLES "A" AND "B" WILL BE USED TO DESIGN THE CAST-IN-PLACE BASE AND WALL FOR VARIOUS MANHOLE DIAMETER AND DEPTH.

CITY OF HOUSTON
DEPARTMENT OF PUBLIC WORKS AND ENGINEERING

SANITARY SEWER
PRECAST CONCRETE MANHOLE
WITH CAST-IN-PLACE BASE
(NOT TO SCALE)

APPROVED BY: CITY ENGINEER | APPROVED BY: DIRECTOR OF PUBLIC WORKS AND ENGINEERING

EFF DATE: JULY-01-2010 | DWG NO: 02082-08

NO.	DATE	REVISION	APP.

PAPE-DAWSON
2107 CITYWEST BLVD, 3RD FLR I HOUSTON, TX 77042 I 713.428.2400
TEXAS ENGINEERING FIRM #470 I TEXAS SURVEYING FIRM #10028800

PAPE-DAWSON
2107 CITYWEST BOULEVARD
3RD FLR
HOUSTON, TEXAS 77402
713-428-2400
TX FIRM #470

SURVEYED BY:
PAPE-DAWSON
FB NO. 24-018

THIS DOCUMENT IS RELEASED FOR INTERIM REVIEW UNDER THE AUTHORIZATION OF AMIRHOSSEIN SHOKOUHI, P.E. (#139835) AND IS **NOT TO BE USED FOR CONSTRUCTION.**

CITY OF HOUSTON
HOUSTON PUBLIC WORKS

LIFT STATION REHABILITATION AND RECONSTRUCTION
BEN'S BRANCH, WOODLAND RIDGE, ELMWOOD HILLS, FOREST SHORES, TRAIL RIVER, RIVERLAWN

CIVIL

SANITARY SEWER DETAILS III

WBS NUMBER	FOR CITY OF HOUSTON USE ONLY
R-000267-0180-3	
DRAWING SCALE	
AS NOTED	
CITY OF HOUSTON PM	
BRENDA JOHNSON P.E.	
SHEET NO. 016 OF 338	

GC-11

FILE PATH: K:\Projects\423\77 COH LS Package\00\03 CADD\Plans\Sheets\01 General\CIVIL DETAILS.dwg

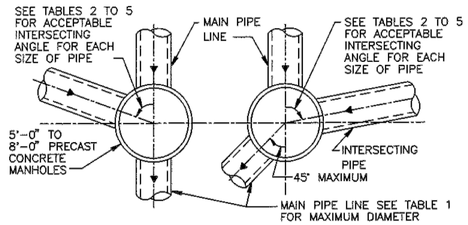

FOR MAIN PIPES FROM STRAIGHT THROUGH TO 45° DEFLECTION

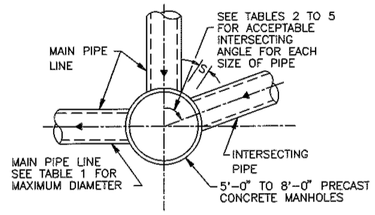

FOR MAIN PIPE WITH 45° TO 90° DEFLECTION

TABLE 1

MAXIMUM MAIN PIPE DIAMETER (I D) IN INCHES

MANHOLE DIAMETER (FT)	STRAIGHT THROUGH TO 45° DEFLECTION	WITH 90° DEFLECTION	TABLE TO BE USED
5	36	27	2
6	42	33	3
7	48	36	4
8	60	42	5

TABLE 2

MINIMUM ANGLE AND INTERSECTING PIPE ID SIZES FOR 5'-0" DIA MANHOLE

INTERSECTING PIPE ID SIZES (INCHES)	MINIMUM INTERSECTING ANGLE IN DEGREES FOR VARIOUS MAIN PIPE ID SIZES IN INCHES										
	8"	10"	12"	15"	18"	21"	24"	27"	30"	33"	36"
8	49	50	54	58	61	66	69	73	77	82	86
10		53	57	61	64	68	71	76	79	84	88
12			61	65	68	72	75	80	83	88	–
15				68	71	75	79	83	87	–	–
18					75	79	82	87	90	–	–
21						83	86	90	–	–	–
24							90	–	–	–	–
27								–	–	–	–
30									–	–	–
33										–	–
36											–

* NOT APPLICABLE
(INTERSECTING PIPE GREATER THAN MAIN PIPE)

NOTES ON USE OF STANDARD DETAIL 02082-03

TABLE 3

MINIMUM ANGLE AND INTERSECTING PIPE ID SIZES FOR 6'-0" DIA MANHOLE

INTERSECTING PIPE ID SIZES (INCHES)	MINIMUM INTERSECTING ANGLE IN DEGREES FOR VARIOUS MAIN PIPE ID SIZES IN INCHES											
	8"	10"	12"	15"	18"	21"	24"	27"	30"	33"	36"	42"
8	40	42	45	49	51	54	57	61	63	67	70	78
10		44	47	50	53	56	59	62	65	69	72	79
12			50	54	56	60	62	66	68	72	75	83
15				57	59	62	65	69	71	75	78	85
18					62	65	68	71	74	78	81	88
21						68	71	74	77	81	84	–
24							74	77	80	84	87	–
27								83	85	89	–	–
30									–	–	–	–
33										–	–	–
36											–	–
42												–

*

TABLE 4

MINIMUM ANGLE AND INTERSECTING PIPE ID SIZES FOR 7'-0" DIA MANHOLE

INTERSECTING PIPE ID SIZES (INCHES)	MINIMUM INTERSECTING ANGLE IN DEGREES FOR VARIOUS MAIN PIPE ID SIZES IN INCHES												
	8"	10"	12"	15"	18"	21"	24"	27"	30"	33"	36"	42"	48"
8	35	36	39	42	44	47	49	52	54	57	59	65	71
10		38	40	43	45	48	50	53	55	59	61	67	73
12			43	46	48	51	53	56	58	61	64	70	76
15				48	50	53	55	58	61	64	66	72	78
18					58	56	58	61	63	66	69	74	81
21						58	60	63	66	69	71	77	83
24							63	66	68	71	74	79	86
27								70	72	76	78	84	90
30									78	81	83	89	–
33										86	88	–	–
36											–	–	–
42												–	–
48													–

*

TABLE 5

MINIMUM ANGLE AND INTERSECTING PIPE ID SIZES FOR 8'-0" DIA MANHOLE

INTERSECTING PIPE ID SIZES (INCHES)	MINIMUM INTERSECTING ANGLE IN DEGREES FOR VARIOUS MAIN PIPE ID SIZES IN INCHES														
	8"	10"	12"	15"	18"	21"	24"	27"	30"	33"	36"	42"	48"	54"	60"
8	30	32	34	36	38	41	43	45	47	50	52	56	61	67	74
10		33	35	38	40	42	44	46	48	51	53	58	63	68	77
12			38	40	42	44	46	49	51	53	55	60	65	71	79
15				42	44	47	48	51	53	56	58	62	67	73	81
18					46	49	51	53	55	58	66	64	70	75	83
21						51	53	55	57	60	62	67	72	77	85
24							55	57	59	62	64	69	74	79	89
27								61	63	66	68	73	78	83	–
30									67	70	72	77	82	87	–
33										74	76	81	86	–	–
36											81	86	–	–	–
42												–	–	–	–
48													–	–	–
54														–	–
60															–

*

NOTES TO SPECIFIER:

1. *"–" INDICATES THAT A SPECIAL DESIGN OR THE NEXT LARGER MANHOLE SIZE SHALL BE USED.*
2. *TABLES 2 TO 5 ARE BASED ON A MIN SEPARATION DISTANCE "S" OF 15.5" OR INTERSECTION PIPE OD/2, WHICHEVER IS GREATER, BETWEEN MAIN AND INTERSECTING PIPES ALONG THE MANHOLE INSIDE WALL ARC.*
3. *PIPE WALL THICKNESS USED IN TABLES 2 TO 5 ARE BASED ON RCP. THE DESIGN ENGINEER MAY CALCULATE TO SEE IF THINNER WALL PIPES CAN MEET THE SEPARATION CRITERIA FOR ANGLES SMALLER THAN THE TABLES ALLOW.*
4. *LIMITATIONS TO BASE HEIGHT ARE BASED ON RESISTING BUOYANT UPLIFT FORCES BASED ON WATER AT GROUND SURFACE AND A SAFETY FACTOR OF 1.20.*
5. *A SPECIAL DESIGN IS REQUIRED IF MANHOLE ID IS GREATER THAN 8 FT.*

CITY OF HOUSTON
DEPARTMENT OF PUBLIC WORKS AND ENGINEERING
ENGINEERING, CONSTRUCTION AND REAL ESTATE GROUP

SANITARY SEWER
5'-0" TO 8'-0" DIAMETER
PRECAST CONCRETE MANHOLE NOTES
(NOT TO SCALE)

APPROVED BY:	APPROVED BY:
CITY ENGINEER	DIRECTOR OF PUBLIC WORKS AND ENGINEERING
EFF DATE: OCT-01-2002	DWG NO: 02082N-03

PAPE-DAWSON
2107 CITYWEST BLVD, 3RD FLR I HOUSTON, TX 77042 I 713.428.2400
TEXAS ENGINEERING FIRM #470 I TEXAS SURVEYING FIRM #10028800

PAPE-DAWSON
2107 CITYWEST BOULEVARD
3RD FLR
HOUSTON, TEXAS 77402
713-428-2400
TX FIRM #470

SURVEYED BY:
PAPE-DAWSON
FB NO. 24-018

THIS DOCUMENT IS RELEASED FOR INTERIM REVIEW UNDER THE AUTHORIZATION OF AMIRHOSSEIN SHOKOUHI, P.E. (#139835) AND IS **NOT TO BE USED FOR CONSTRUCTION.**

CITY OF HOUSTON
HOUSTON PUBLIC WORKS

LIFT STATION REHABILITATION AND RECONSTRUCTION
BEN'S BRANCH, WOODLAND RIDGE, ELMWOOD HILLS, FOREST SHORES, TRAIL RIVER, RIVERLAWN

CIVIL

SANITARY SEWER DETAILS IV

WBS NUMBER	FOR CITY OF HOUSTON USE ONLY
R-000267-0180-3	
DRAWING SCALE	
AS NOTED	
CITY OF HOUSTON PM	
BRENDA JOHNSON P.E.	
SHEET NO. 017 OF 338	

GC-12

APP. | REVISION | NO. | DATE

FILE PATH: K:\Projects\423\77 COH LS Package\00\03 CADD\Plans\Sheets\01 General\CIVIL DETAILS.dwg

02317-03

NOTES:

1. THIS DETAIL MAY BE USED ONLY FOR DRY STABLE TRENCH CONDITIONS PER COH STANDARD. SEE COH STANDARD SPECIFICATION FOR REQUIREMENTS IN OTHER CONDITIONS.
2. MIN. TRENCH WIDTH SHALL BE PIPE OD PLUS AN ALLOWANCE "A" FOR THE NOMINAL PIPE SIZE:

NOMINAL PIPE SIZE	"A"
18" TO 30"	24"
OVER 30"	36"

3. MAX. TRENCH WIDTH SHALL BE NOT GREATER THAN MIN. TRENCH WIDTH PLUS 24 INCHES, UNLESS OTHERWISE NOTED.
4. ALTERNATIVE EMBEDMENT BACKFILL MATERIALS FOR FORCE MAINS MAY BE ALLOWED. SEE COH STANDARD SPECIFICATIONS.

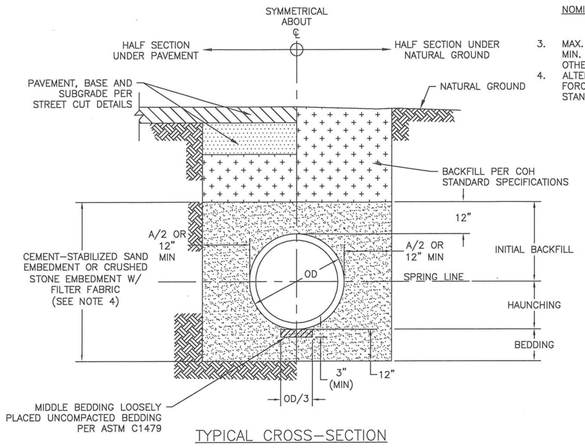

TYPICAL CROSS-SECTION

SANITARY OR STORM SEWER BEDDING AND BACKFILL FOR DRY STABLE TRENCH
NTS

02317-05

NOTES:

1. WHERE MULTIPLE BOX SEWER ARE USED IN THE SAME TRENCH, MIN. OUTSIDE TO OUTSIDE BOX SEWER SEPERATION SHALL BE 6".
2. SUBGRADE AND PAVEMENT FOR STREET CUT DETAILS – 02951.

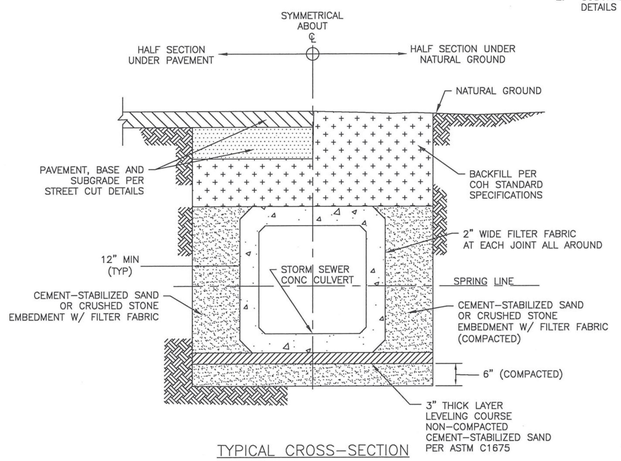

TYPICAL CROSS-SECTION

PRECAST CONCRETE BOX STORM SEWER BEDDING AND BACKFILL FOR DRY STABLE TRENCH
NTS

02317-06

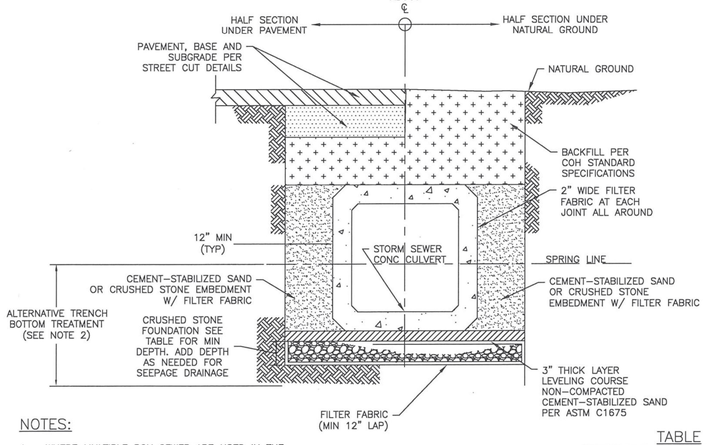

NOTES:

1. WHERE MULTIPLE BOX SEWER ARE USED IN THE SAME TRENCH, MIN. OUTSIDE TO OUTSIDE BOX SEWER SEPERATION SHALL BE 6".
2. ALTERNATIVE TRENCH BOTTOM TREATMENT MAY BE USED AS APPROVED BY THE CITY OF ENGINEERS AND AS PAID FOR IN THE PROPOSAL.

TABLE

CULVERT SIZE (FT)	FOUNDATION DEPTH(INCHES)
3' X 2' TO 6' X 6'	12
6' X 6' AND LARGER	18

PRECAST CONCRETE BOX STORM SEWER BEDDING AND BACKFILL FOR WET STABLE TRENCH
NTS

02317-07

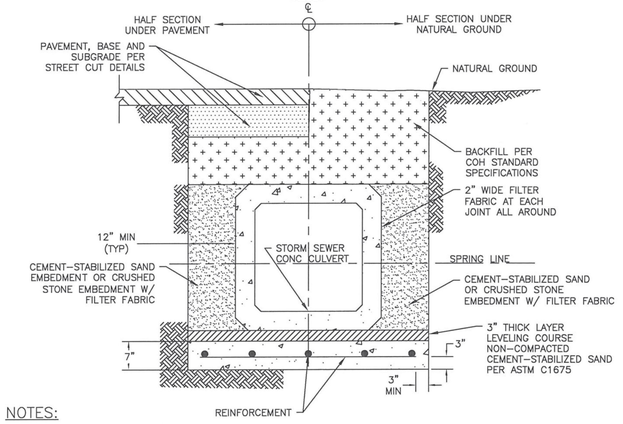

NOTES:

1. WHERE MULTIPLE BOX SEWER ARE USED IN THE SAME TRENCH, MIN OUTSIDE TO OUTSIDE BOX SEWER SEPERATION SHALL BE 6".
2. REINFORCED CONCRETE SLAB PIPE BEDDING TO BE PLACED IN DRY TRENCH ONLY.
3. CONCRETE IN SLAB TO REACH MIN COMPRESSIVE STRENGTH OF 1000 PSI BASED ON MAX DESIGN BEFORE PIPE IS LAID.
4. PRECAST SEAL SLAB MAYBE USED AS APPROVED BY CITY ENGINEER.

PRECAST CONCRETE BOX STORM SEWER BEDDING AND BACKFILL WITH SEAL SLAB
NTS

NO.	DATE	REVISION	APP.

FIRM INFORMATION

ENGINEER'S SEAL

CITY OF HOUSTON
HOUSTON PUBLIC WORKS

STORM SEWER
02317-03 THROUGH 07

APPROVED BY: _____ CITY ENGINEER

APPROVED BY: _____ DEPUTY DIRECTOR

APPROVED BY: _____ DIRECTOR

EFFECTIVE DATE: JUL-01-2019

FOR CITY OF HOUSTON USE ONLY

SHEET NO.

PAPE-DAWSON
2107 CITYWEST BLVD, 3RD FLR I HOUSTON, TX 77042 I 713.428.2400
TEXAS ENGINEERING FIRM #470 I TEXAS SURVEYING FIRM #10028800

PAPE-DAWSON
2107 CITYWEST BOULEVARD
3RD FLR
HOUSTON, TEXAS 77402
713-428-2400
TX FIRM #470

SURVEYED BY:
PAPE-DAWSON
FB NO. 24-018

THIS DOCUMENT IS RELEASED FOR INTERIM REVIEW UNDER THE AUTHORIZATION OF AMIRHOSSEIN SHOKOUHI, P.E. (#139855) AND IS **NOT TO BE USED FOR CONSTRUCTION.**

CITY OF HOUSTON
HOUSTON PUBLIC WORKS

LIFT STATION REHABILITATION AND RECONSTRUCTION
BEN'S BRANCH, WOODLAND RIDGE, ELMWOOD HILLS, FOREST SHORES, TRAIL RIVER, RIVERLAWN

CIVIL

STORM SEWER DETAILS I

WBS NUMBER	FOR CITY OF HOUSTON USE ONLY
R-000267-0180-3	
DRAWING SCALE	
AS NOTED	
CITY OF HOUSTON PM	
BRENDA JOHNSON P.E.	
SHEET NO. 018 OF 338	

GC-13

FILE PATH: K:\Projects\423\77 COH LS Package\00\03 CADD\Plans\Sheets\01 General\CIVIL DETAILS.dwg

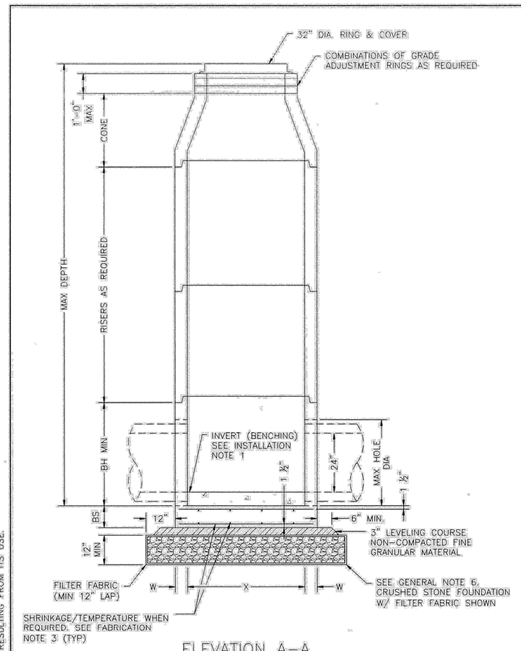

ELEVATION A–A
CONE TOP WITH SHIP LOOSE RING & COVER OPTION

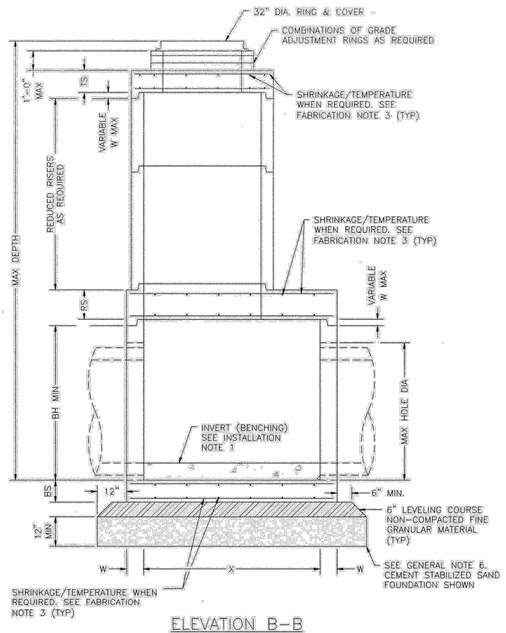

ELEVATION B–B
FLAT SLAB TOP WITH SHIP LOOSE RING & COVER OPTION

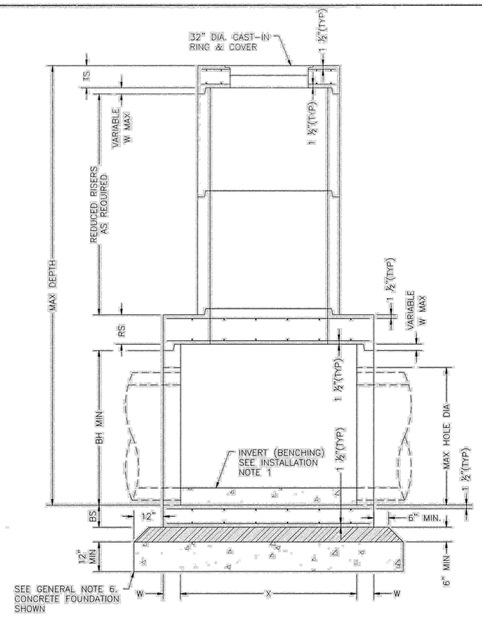

ELEVATION C–C
FLAT SLAB TOP WITH INVERTED RING & COVER OPTION

FABRICATION NOTES:

1. PROVIDE CLASS "H" CONCRETE IN ACCORDANCE WITH TEXAS DEPARTMENT OF TRANSPORTATION ITEM 421 AND HAVING A MINIMUM COMPRESSIVE STRENGTH OF 5,000 PSI.
2. PROVIDE GRADE 60 REINFORCING STEEL OR EQUIVALENT AREA OF WWR. PROVIDE CIRCUMFERENTIAL REINFORCING STEEL IN VERTICAL WALLS OF BASE, RISER AND CONE IN ACCORDANCE WITH ASTM C478.
3. SLABS WITH A THICKNESS OF 8" OR GREATER REQUIRE SHRINKAGE AND TEMPERATURE REINFORCING STEEL. PROVIDE STEEL AREA = 0.11 IN^2/FT EACH WAY.
4. MANUFACTURE BASE AND RISERS TO NEAREST 3" INCREMENT.
5. DESIGN TONGUE AND GROOVE JOINTS FOR FULL CLOSURE ON BOTH SHOULDERS. MINIMUM SPIGOT DEPTH IS ¾".
6. PROVIDE LIFTING DEVICES IN CONFORMANCE WITH MANUFACTURER'S RECOMMENDATIONS.
7. PROVIDE CAST IRON SOLID COVER, UNLESS NOTED OTHERWISE ELSEWHERE IN THE PLANS.
8. THREE DIFFERENT OPTIONS FOR CAPPING THE MANHOLE RISER NEAR THE FINISHED GRADE ARE SHOWN. CONES CAN BE USED WHEN COVER IS SUFFICIENT TO ALLOW FOR PROPER PLACEMENT. FLAT LIDS ARE TO BE USED WHERE COVER IS LIMITED.

INSTALLATION NOTES:

1. IF REQUIRED ELSEWHERE, INVERTS (BENCHING) TO BE PROVIDED BY CONTRACTOR. CONCRETE OR MORTAR USED FOR INVERT IS SUBSIDIARY TO THIS ITEM. REFER TO CITY OF HOUSTON SPECIFICATION SECTION 02082 FOR INVERT (BENCHING) REQUIREMENTS.
2. SEAL TONGUE AND GROOVE JOINTS WITH PREFORMED OR BULK MASTIC IN CONFORMANCE WITH MANUFACTURER'S RECOMMENDATIONS. TONGUE AND GROOVE JOINTS MAY BE GROUTED NO MORE THAN 1" BETWEEN EACH SECTION, OR ½ THE JOINT DEPTH, WHICHEVER IS GREATER. DO NOT GROUT RUBBER GASKET JOINTS WITHOUT MANUFACTURER'S RECOMMENDATION.
3. INITIAL INSTALLATION OF GRADE ADJUSTMENT RINGS IS LIMITED TO 1'–0" MAX AS SHOWN.
4. GRADE ADJUSTMENT RINGS MAY BE INCREASED TO 1'–6" MAX WHEN FUTURE CONSTRUCTION AFFECTS FINAL GRADE OF STRUCTURE. MAKE ADJUSTMENTS GREATER THAN 1'–6" WITH ADDITIONAL RISERS. ADJUSTMENTS MAY BE MADE UP TO THE MAX DEPTH OF 25'–0". STRUCTURE MUST BE EVALUATED IF MAX DEPTH WILL BE EXCEEDED.

GENERAL NOTES:

1. SEE TABLE 1 FOR MINIMUM DESIGN REQUIREMENTS. CONCENTRIC RISER WITH RESPECT TO BASE (ALTERNATIVE CONFIGURATION) FALLS OUTSIDE THE SCOPE OF REQUIREMENTS PROVIDED. ENGINEER OF RECORD ACCEPTS RESPONSIBILITY FOR SAFETY AND ADEQUACY OF MANHOLE IF THE ALTERNATIVE CONFIGURATION IS USED.
2. DESIGNED ACCORDING TO ASTM C478.
3. PAYMENT FOR PRECAST MANHOLE PER SECTION 02082 "PRECAST CONCRETE MANHOLES".
4. PIPE OD + PLACEMENT TOLERANCE MUST BE EQUAL OR LESS THAN MAX HOLE DIA. FOR RIGID PIPE, PLACEMENT TOLERANCE IS 4" MAX, 2" MIN. FOR FLEXIBLE PIPE, CONSULT BOOT/SEAL MANUFACTURER'S SPECIFICATION FOR PLACEMENT TOLERANCE.
5. STORM WATER SEWER PIPE INTERNAL DIA SHALL NOT BE LESS THAN 24".
6. FOUNDATION/SUBGRADE TO BE DESIGNED BY ENGINEER AND MEET MINIMUM REQUIREMENTS ACCORDING TO SECTION 02082.
7. ALL STORM WATER MANHOLES ARE TO BE PRECAST CONCRETE, UNLESS OTHERWISE NOTED ELSEWHERE IN THE PLANS.
8. ECCENTRIC REDUCED RISER WITH RESPECT TO BASE IS THE PREFERRED MANHOLE CONFIGURATION. CONCENTRIC REDUCED RISER WITH RESPECT TO BASE MANHOLE CONFIGURATION IS AN ALTERNATIVE DESIGN THAT WILL BE ACCEPTED BASED ON THE NEEDS OF THE CITY OF HOUSTON.
9. CONES MAY BE CONCENTRIC OR ECCENTRIC. REDUCTION CONES ARE ACCEPTABLE. REFER TO MANUFACTURER FOR CONE DIMENSIONS.
10. MANHOLE SIZE SHALL CONSIDER ENGINEERING ECONOMY. THIS DETAIL IS NOT APPLICABLE TO ROUND MANHOLES LARGER THAN 6–FOOT DIA.

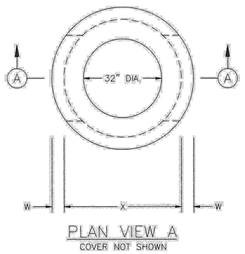

PLAN VIEW A
COVER NOT SHOWN

4–FT DIA MANHOLE

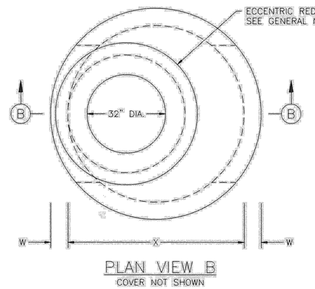

PLAN VIEW B
COVER NOT SHOWN

5–FT & 6–FT DIA MANHOLE
ECCENTRIC MANHOLE
(PREFERRED CONFIGURATION)

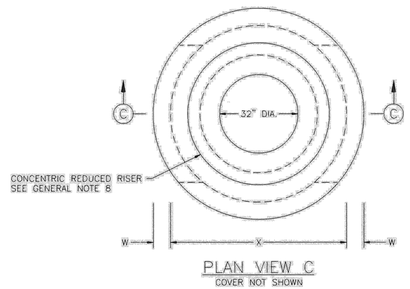

PLAN VIEW C
COVER NOT SHOWN

5–FT & 6–FT DIA MANHOLE
CONCENTRIC MANHOLE
(ALTERNATE CONFIGURATION)

TABLE 1
PRECAST ROUND MANHOLE (PRM) MINIMUM REQUIREMENTS FOR 24 IN. TO 42 IN. INTERNAL DIA STORM SEWER PIPES

	SIZE	BASE SLAB THICKNESS	BASE UNIT OR RISER THICKNESS	REDUCED RISER DIA	REDUCING SLAB THICKNESS	TOP SLAB THICKNESS	MAX DEPTH TO TOP OF BASE SLAB	MIN HEIGHT	MAX HOLE DIA
	X	BS	W	ID	RS	TS	MAX DEPTH	BH MIN	MAX HOLE DIA
	FT	IN.	IN.	IN.	IN.	IN.	FT.	IN.	IN.
PRM	4	9	5	–	–	9	25	42	35
	5	9	6	48	9	9	25	42	42
	6	9	7	48/60*	12	9	25	42	56

(*) 60-IN REDUCED RISER IS TO BE USED WHEN DEEMED NECESSARY TO SATISFY WALL PENETRATION SPACING REQUIREMENTS.

CITY OF HOUSTON
HOUSTON PUBLIC WORKS

STORM SEWER TYPE 'C' PRECAST ROUND MANHOLE

(NOT TO SCALE)

APPROVED BY:	APPROVED BY:
Suhail Kanwar	Carol Haddock
CITY ENGINEER	DIRECTOR OF HOUSTON PUBLIC WORKS
EFF DATE: JUL–01–2021	DWG NO: 02082–12

NO.	DATE	REVISION	APP.

DISCLAIMER:
THE USE OF THIS STANDARD IS GOVERNED BY THE TEXAS ENGINEERING PRACTICE ACT. THE DESIGN REQUIREMENTS ON THIS STANDARD DO NOT PURPORT TO ADDRESS ALL OF THE SAFETY CONCERNS ASSOCIATED WITH THEIR USE. THE ENGINEER OF RECORD (EOR) IS TO REVIEW THESE DESIGN REQUIREMENTS AND BY AUTHORIZING THEIR USE, ACCEPTS RESPONSIBILITY FOR THEIR APPLICABILITY, ADEQUACY AND SAFETY. NO WARRANTY OF ANY KIND IS MADE BY THE CITY OF HOUSTON FOR ANY PURPOSES WHATSOEVER. THE CITY OF HOUSTON ASSUMES NO RESPONSIBILITY FOR INCORRECT RESULTS OR DAMAGES RESULTING FROM ITS USE.

PAPE–DAWSON
2107 CITYWEST BLVD, 3RD FLR I HOUSTON, TX 77042 I 713.428.2400
TEXAS ENGINEERING FIRM #470 I TEXAS SURVEYING FIRM #10028800

PAPE–DAWSON
2107 CITYWEST BOULEVARD
3RD FLR
HOUSTON, TEXAS 77402
713–428–2400
TX FIRM #470

SURVEYED BY:
PAPE–DAWSON
FB NO. 24–018

THIS DOCUMENT IS RELEASED FOR INTERIM REVIEW UNDER THE AUTHORIZATION OF AMIRHOSSEIN SHOKOUHI, P.E. (#139835) AND IS **NOT TO BE USED FOR CONSTRUCTION.**

CITY OF HOUSTON
HOUSTON PUBLIC WORKS

LIFT STATION REHABILITATION AND RECONSTRUCTION
BEN'S BRANCH, WOODLAND RIDGE, ELMWOOD HILLS, FOREST SHORES, TRAIL RIVER, RIVERLAWN

CIVIL

STORM SEWER DETAILS II

WBS NUMBER	FOR CITY OF HOUSTON USE ONLY
R–000267–0180–3	
DRAWING SCALE	
AS NOTED	
CITY OF HOUSTON PM	
BRENDA JOHNSON P.E.	
SHEET NO. 019 OF 338	

GC–14

FILE PATH: K:\Projects\423\77 COH LS Package\00\03 CADD\Plans\Sheets\01 General\CIVIL DETAILS.dwg

Reinforced Concrete Box Culvert
Tongue and Groove Joint

NOTES:
1. BOX CULVERT MANUFACTURED TO MEET CURRENT ASTM AND AASHTO SPECIFICATIONS.
2. THE CONCRETE BOX CULVERT DIMENSION MAY VARY PER MANUFACTURER. IN THIS SHEET SET, BOX CULVERT CALCULATIONS WERE BASED OFF SPECIFICATIONS PROVIDED BY RINKER MATERIALS.

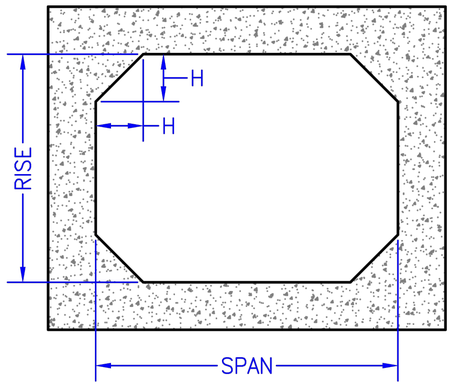

Section Thru Barrel

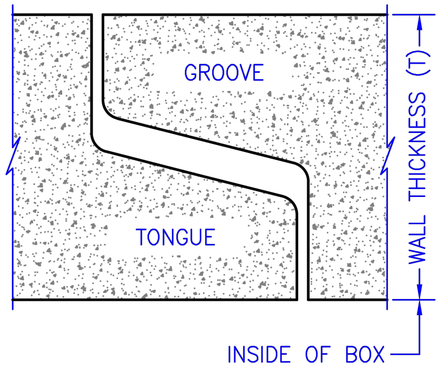

Section Thru Joint

Standard Box Culvert Approximate Weights (lbs/ft)

		Span									
		3'	4'	5'	6'	7'	8'	9'	10'	11'	12'
Rise	2'	600	906	1,275	1,706	2,200	2,400	-	-	-	-
	3'	700	1,031	1,425	1,881	2,400	2,600	3,206	3,875	4,606	5,400
	4'	-	1,156	1,575	2,056	2,600	2,800	3,431	4,125	4,881	5,700
	5'	-	-	1,725	2,231	2,800	3,000	3,656	4,375	5,156	6,000
	6'	-	-	-	2,406	3,000	3,200	3,881	4,625	5,431	6,300
	7'	-	-	-	-	3,200	3,400	4,106	4,875	5,706	6,600
	8'	-	-	-	-	-	3,600	4,331	5,125	5,981	6,900
	9'	-	-	-	-	-	-	4,556	5,375	6,256	7,200
	10'	-	-	-	-	-	-	-	5,625	6,531	7,500
	11'	-	-	-	-	-	-	-	-	6,806	7,800
	12'	-	-	-	-	-	-	-	-	-	8,100
Wall (T)		4"	5"	6"	7"	8"	8"	9"	10"	11"	12"
Haunch (H)		4"	5"	6"	7"	8"	8"	9"	10"	11"	12"

NO.	DATE	REVISION	APP.

PAPE–DAWSON
2107 CITYWEST BLVD, 3RD FLR I HOUSTON, TX 77042 I 713.428.2400
TEXAS ENGINEERING FIRM #470 I TEXAS SURVEYING FIRM #10028800

PAPE–DAWSON
2107 CITYWEST BOULEVARD
3RD FLR
HOUSTON, TEXAS 77402
713–428–2400
TX FIRM #470

SURVEYED BY:
PAPE–DAWSON
FB NO. 24–018

THIS DOCUMENT IS RELEASED FOR INTERIM REVIEW UNDER THE AUTHORIZATION OF AMIRHOSSEIN SHOKOUHI, P.E. (#139835) AND IS **NOT TO BE USED FOR CONSTRUCTION.**

CITY OF HOUSTON
HOUSTON PUBLIC WORKS

LIFT STATION REHABILITATION AND RECONSTRUCTION
BEN'S BRANCH, WOODLAND RIDGE, ELMWOOD HILLS, FOREST SHORES, TRAIL RIVER, RIVERLAWN

CIVIL

STORM SEWER DETAILS III

WBS NUMBER	FOR CITY OF HOUSTON USE ONLY
R–000267–0180–3	
DRAWING SCALE	
AS NOTED	
CITY OF HOUSTON PM	
BRENDA JOHNSON P.E.	
SHEET NO. 020 OF 338	

GC–15

FILE PATH: K:\Projects\423\77 COH LS Package\00\03 CADD\Plans\Sheets\01 General\CIVIL DETAILS.dwg

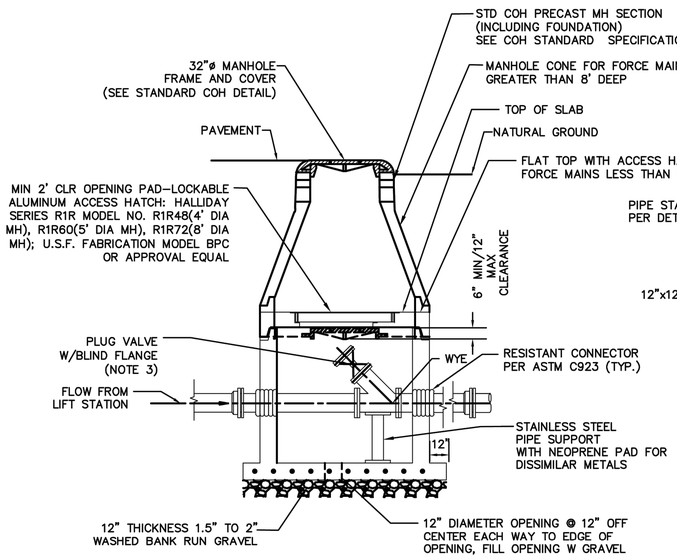

BELOW GROUND BYPASS DETAIL

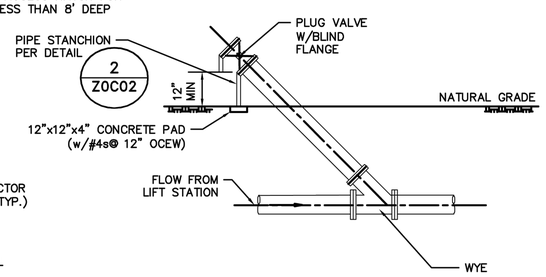

ABOVE GROUND BYPASS DETAIL
USE OF THIS DETAIL MUST BE APPROVED BY WASTEWATER OPERATIONS.

BYPASS MANHOLE DETAIL
SCALE: NONE
Z0C12

MANHOLE SIZE	
FORCEMAIN DIAMETER	**MANHOLE DIAMETER**
8"	**4'–0"**
18"	**5'–0"**
30"	**8'–0"**

NOTES:

1. PROVIDE LINED DUCTILE IRON PIPE, THICK, CLASS 53, FOR FORCE MAIN WITHIN 12" OF OUTSIDE FACE OF MANHOLE. JOINTS WITHIN MANHOLE MAY BE FLANGED (AS SHOWN OR GROOVED (PER ASTM 606) WITHIN MANHOLE, WITH 316 STAINLESS STEEL BOLTS.
2. MANHOLE TOP MAY BE CONCENTRIC CONE, OR FLAT TOP WITH ECCENTRIC OPENING. PROVIDE 32" FRAME AND COVER.
3. ENSURE MIN CLEARANCE OF 18" ON ALL SIDES. OFFSET VALVE ON HATCH/MH OPENING AS NEEDED TO OBTAIN CLEARANCE.

NO.	DATE	REVISION	APP.

PAPE–DAWSON
2107 CITYWEST BLVD, 3RD FLR I HOUSTON, TX 77042 I 713.428.2400
TEXAS ENGINEERING FIRM #470 I TEXAS SURVEYING FIRM #10028800

PAPE–DAWSON
2107 CITYWEST BOULEVARD
3RD FLR
HOUSTON, TEXAS 77402
713–428–2400
TX FIRM #470

SURVEYED BY:
PAPE–DAWSON
FB NO. 24–018

THIS DOCUMENT IS RELEASED FOR INTERIM REVIEW UNDER THE AUTHORIZATION OF AMIRHOSSEIN SHOKOUHI, P.E. (#139835) AND IS **NOT TO BE USED FOR CONSTRUCTION.**

CITY OF HOUSTON
HOUSTON PUBLIC WORKS

LIFT STATION REHABILITATION AND RECONSTRUCTION
BEN'S BRANCH, WOODLAND RIDGE, ELMWOOD HILLS,
FOREST SHORES, TRAIL RIVER, RIVERLAWN

CIVIL

BYPASS DETAIL

WBS NUMBER	FOR CITY OF HOUSTON USE ONLY
R–000267–0180–3	
DRAWING SCALE	
AS NOTED	
CITY OF HOUSTON PM	
BRENDA JOHNSON P.E.	
SHEET NO. 021 OF 338	

GC–16

FILE PATH: K:\Projects\423\77 COH LS Package\00\03 CADD\Plans\Sheets\01 General\CIVIL DETAILS.dwg

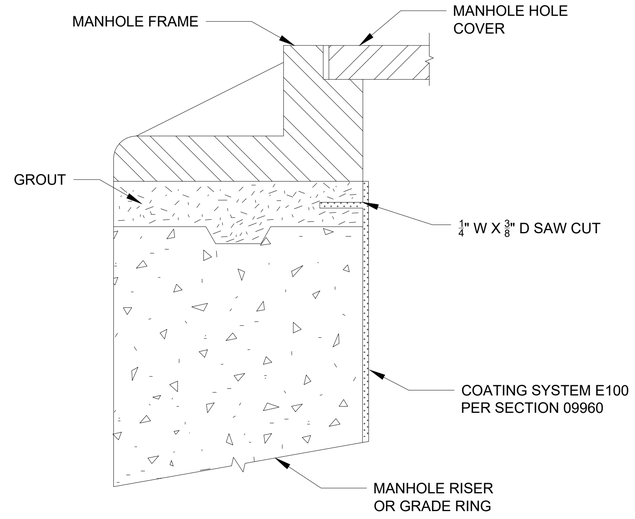

A TERMINATION OF LINING AT MANHOLE FRAME
NTS

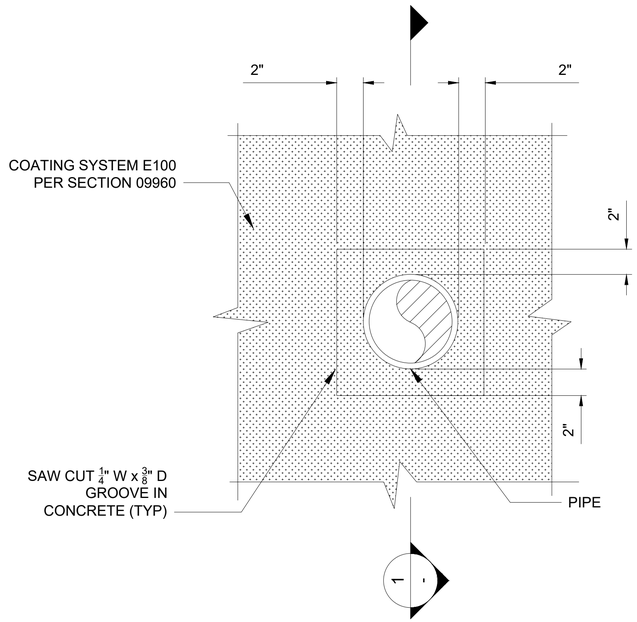

B PIPE PENETRATION COATING TERMINATION DETAIL
NTS

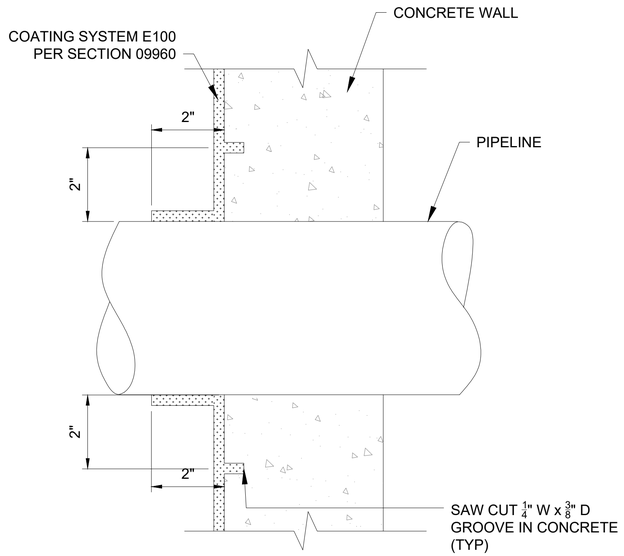

1 / C-1 PIPE PENETRATION COATING TERMINATION SECTION
NTS

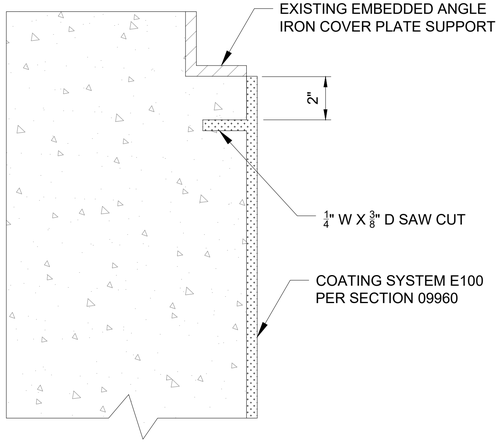

C COATING TERMINATION AT EMBEDDED COVER PLATE SUPPORTS
NTS

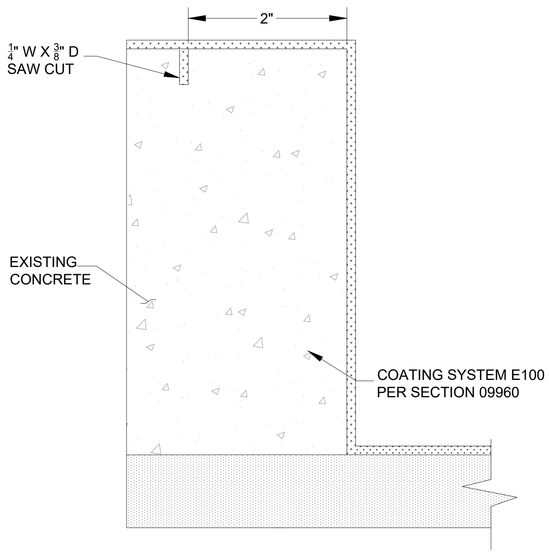

D TOP OF CURB TERMINATION
NTS

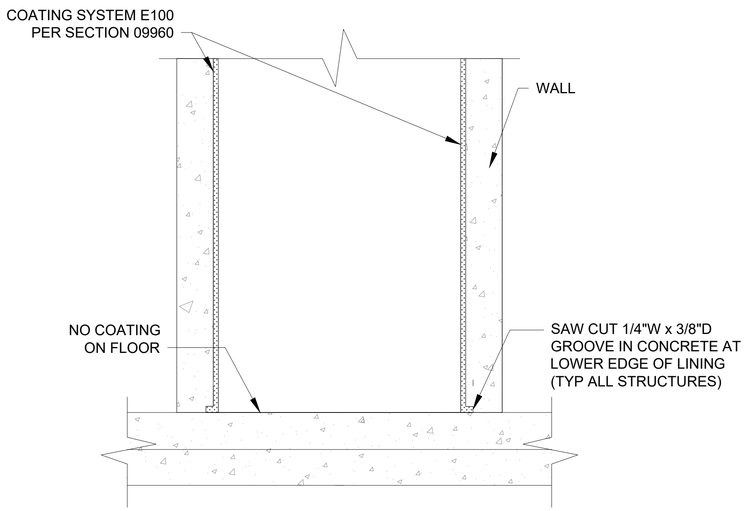

E VERTICAL WALL COATING TERMINATION DETAIL
NTS

NO.	DATE	REVISION	APP.

PAPE-DAWSON
2107 CITYWEST BLVD, 3RD FLR I HOUSTON, TX 77042 I 713.428.2400
TEXAS ENGINEERING FIRM #470 I TEXAS SURVEYING FIRM #10028800

V&A Consulting Engineers, Inc.
15720 Park Row, Suite 500
Houston, TX 77084 Tel. (713) 568-9067
F-9154
V&A Project No.: 22-0426

INTERIM REVIEW ONLY
Document incomplete; not intended for regulatory approval, permit, or construction.
JAMES VAUGHAN HARSHMAN
Engineer
153247
Registration Number
09/02/2025
Date

V&A CONSULTING ENGINEERS, INC.
Texas Registered Engineering Firm
F-9154

SURVEYED BY:
PAPE-DAWSON ENGINEERS
FB NO. 24-018

CITY OF HOUSTON
HOUSTON PUBLIC WORKS

LIFT STATION REHABILITATION AND RECONSTRUCTION
BEN'S BRANCH, WOODLAND RIDGE, ELMWOOD HILLS, FOREST SHORES, TRAIL RIVER, RIVERLAWN

COATING SYSTEM DESIGN

WBS NUMBER	FOR CITY OF HOUSTON USE ONLY
R-000267-0180-3	
DRAWING SCALE	
AS NOTED	
CITY OF HOUSTON PM	
BRENDA JOHNSON P.E.	
SHEET NO. OF	

DWG No.
C-1

FILE PATH: E:\Projects\2022\0400 Thru 0499\22-0426 Var City Of Houston\500 Drawings\DESIGN\60%\60% Coating Sheets\04 Bens Branch\22-0426 Var City Of Houston Bens Branch Coatings.dwg

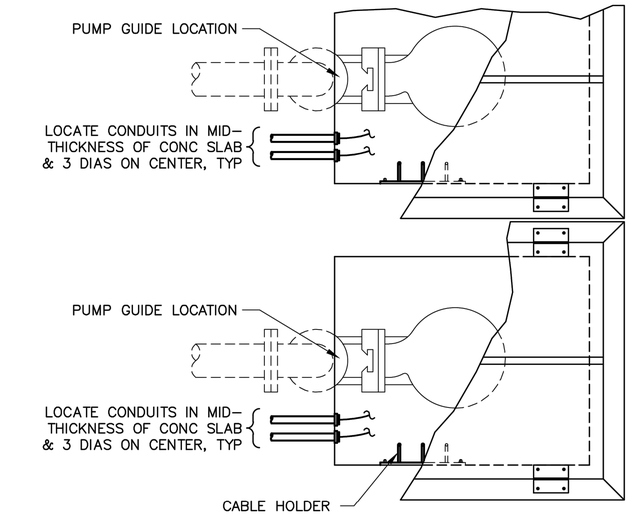

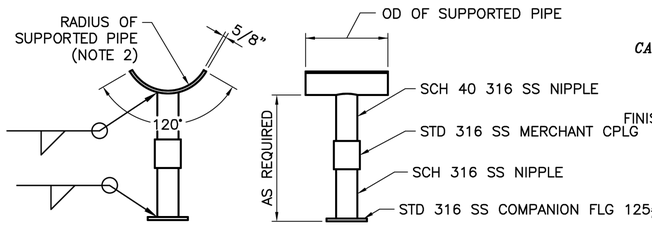

TYP ADJUSTABLE PIPE SUPPORT
(SEE NOTE 1)

DETAIL 2 Z0C02

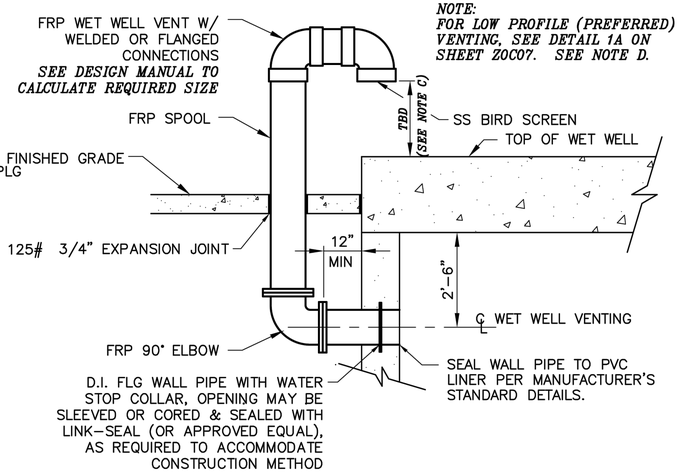

TYPICAL HIGH PROFILE
WET WELL VENTING INSTALLATION

DETAIL 1 Z0C02

NOTES:

1. ADJUSTABLE PIPE SUPPORT ASSEMBLY TO BE 316SS.
2. PROVIDE MEANS OF PREVENTING DISSIMILAR METAL CONTACT.

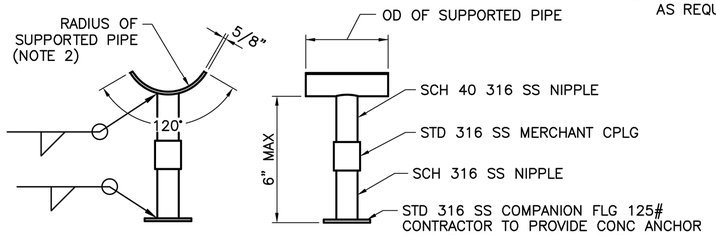

TYP ADJUSTABLE PIPE SUPPORT
FOR USE WITH CONC PIPE SUPPORT PIER
SEE TYP CONC PIPE SUPPORT PIER DETAIL, SHT Z0S02
(SEE NOTE 1)

DETAIL 2A Z0C02

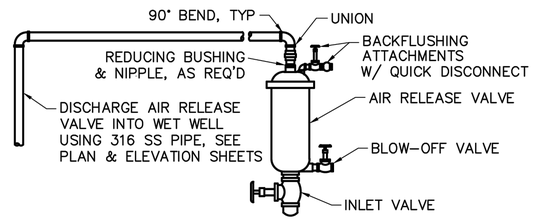

DESIGN ENGINEER TO SIZE VALVE & PIPING FOR SPECIFIC STATION REQUIREMENTS (SEE NOTE E)

TYPICAL AIR RELEASE VALVE ASSY

DETAIL 10 Z0C02

NOTES:

1. ADJUSTABLE PIPE SUPPORT ASSEMBLY TO BE 316SS.
2. PROVIDE MEANS OF PREVENTING DISSIMILAR METAL CONTACT.

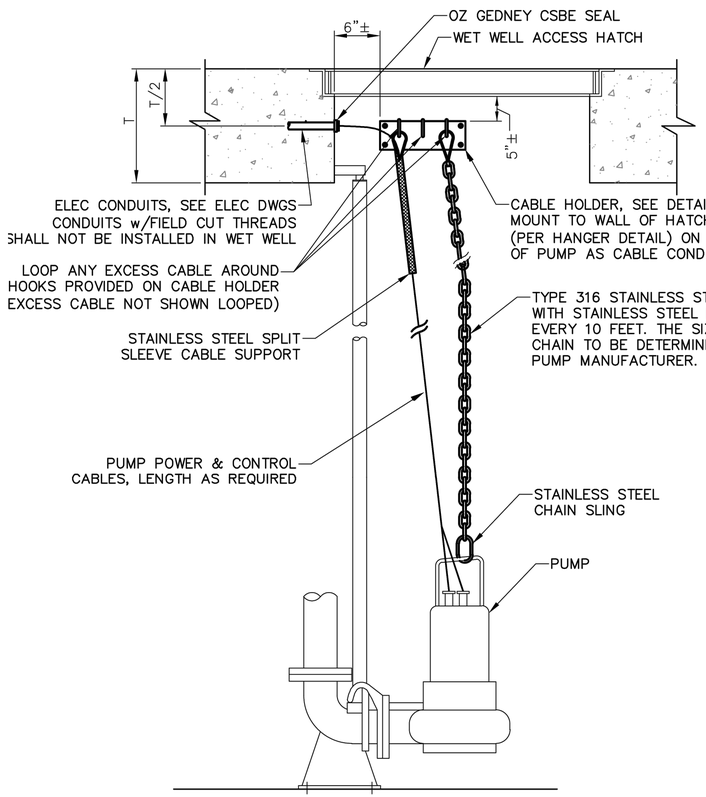

TYP PUMP LIFTING & CABLING DETAIL

DETAIL 3 Z0C02

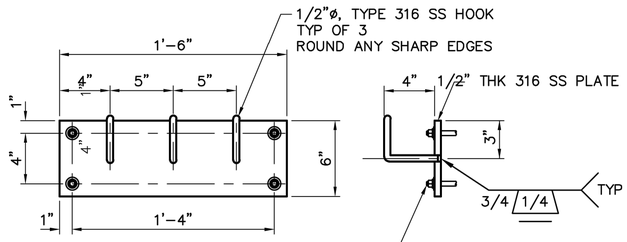

TYPICAL CABLE HOLDER ASSY

DETAIL 14 Z0C02

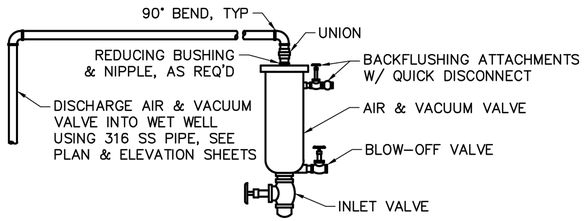

DESIGN ENGINEER TO SIZE VALVE & PIPING FOR SPECIFIC STATION REQUIREMENTS

TYPICAL AIR & VACUUM VALVE ASSY

DETAIL 11 Z0C02

PAPE–DAWSON
2107 CITYWEST BLVD, 3RD FLR I HOUSTON, TX 77042 I 713.428.2400
TEXAS ENGINEERING FIRM #470 I TEXAS SURVEYING FIRM #10028800

PAPE–DAWSON
2107 CITYWEST BOULEVARD 3RD FLR
HOUSTON, TEXAS 77402
713–428–2400
TX FIRM #470

SURVEYED BY:
PAPE–DAWSON
FB NO. 24–018

THIS DOCUMENT IS RELEASED FOR INTERIM REVIEW UNDER THE AUTHORIZATION OF AMIRHOSSEIN SHOKOUHI, P.E. (#139835) AND IS **NOT TO BE USED FOR CONSTRUCTION.**

CITY OF HOUSTON
HOUSTON PUBLIC WORKS

LIFT STATION REHABILITATION AND RECONSTRUCTION
BEN'S BRANCH, WOODLAND RIDGE, ELMWOOD HILLS, FOREST SHORES, TRAIL RIVER, RIVERLAWN

MECHANICAL

LIFT STATION DETAILS I

WBS NUMBER	FOR CITY OF HOUSTON USE ONLY
R–000267–0180–3	
DRAWING SCALE	
AS NOTED	
CITY OF HOUSTON PM	
BRENDA JOHNSON P.E.	
SHEET NO. 023 OF 338	

GM–01

NO.	DATE	REVISION	APP.

FILE PATH: K:\Projects\423\77 COH LS Package\00\03 CADD\Plans\Sheets\01 General\CIVIL DETAILS.dwg

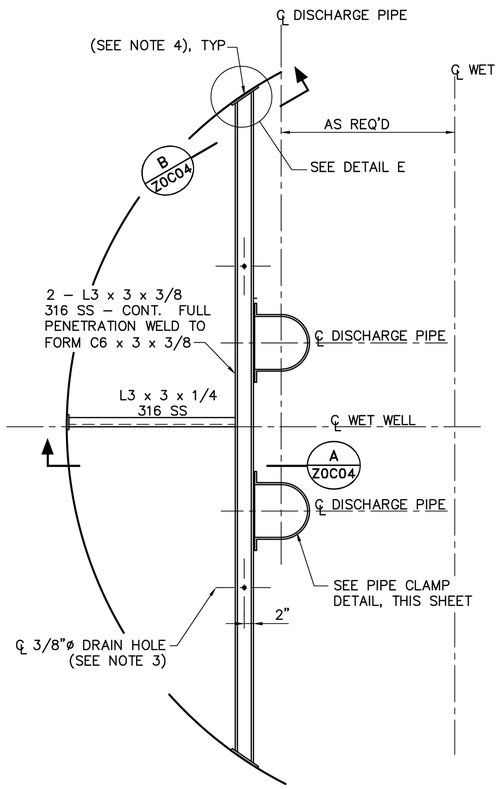

TYP DISCHARGE PIPING SUPPORT PLAN FOR 2 PUMPS

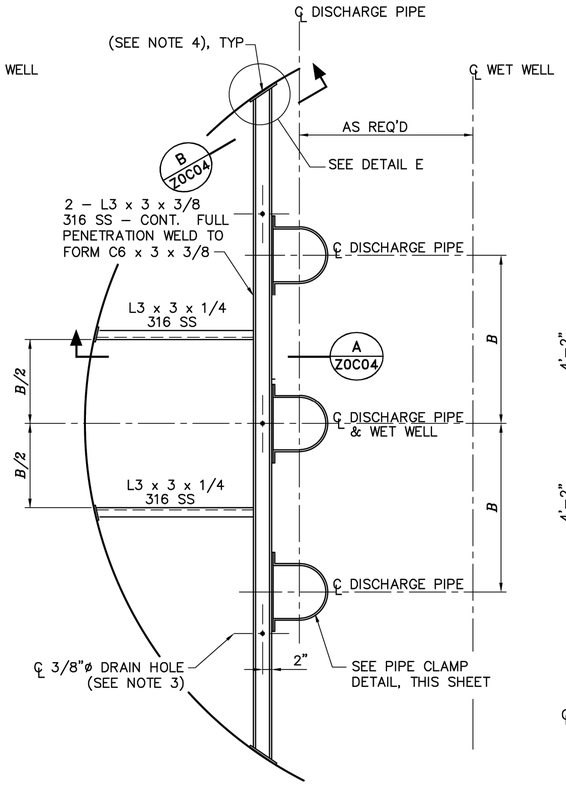

TYP DISCHARGE PIPING SUPPORT PLAN FOR 3 PUMPS

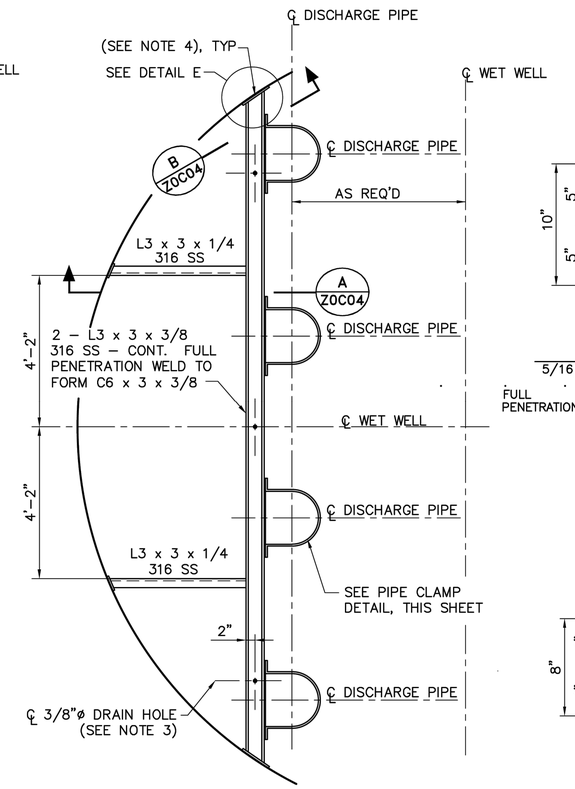

TYP DISCHARGE PIPING SUPPORT PLAN FOR 4 PUMPS

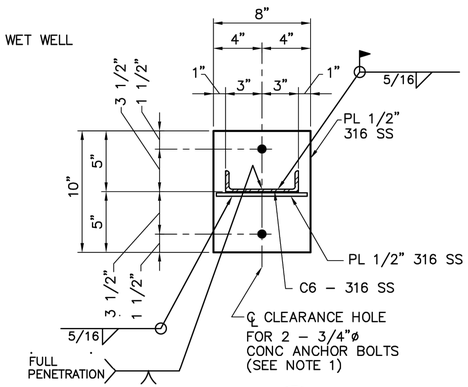

SECTION B Z0C04

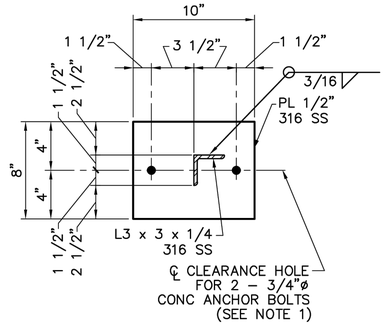

SECTION C Z0C04

NOTES:

1. CONCRETE ANCHOR BOLTS SHALL HAVE 6" MINIMUM EMBEDMENT AND SHALL BE TYPE 316 STAINLESS STEEL, PER SPECIFICATIONS.
2. SEE STATION AND STRUCTURAL DRAWINGS FOR DIMENSIONS AND INFORMATION NOT SHOWN.
3. DRILL 3/8"ø HOLES, 1" OFF C OF C6 AT MIDSPAN BETWEEN LATERAL PIPE SUPPORTS TO ALLOW FOR DRAINAGE. 3 HOLES PER CHANNEL WHERE 2 LATERAL SUPPORTS REQUIRED; 2 HOLES PER CHANNEL WHERE 1 LATERAL SUPPORT REQUIRED.
4. SET 1/4" NEOPRENE GASKET ON WALL SURFACE IN SIKA 1A (OR EQUAL) SEALANT.

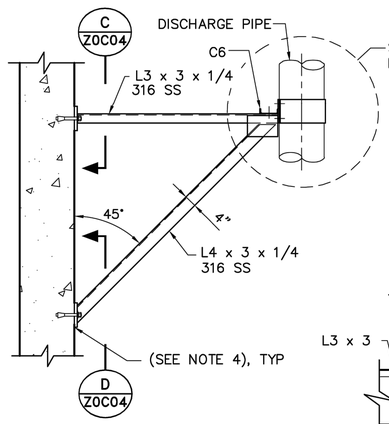

TYP LATERAL PIPE SUPPORT FRAME SECTION A Z0C04

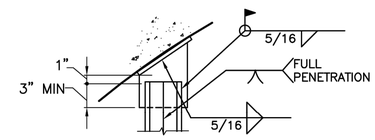

DETAIL E

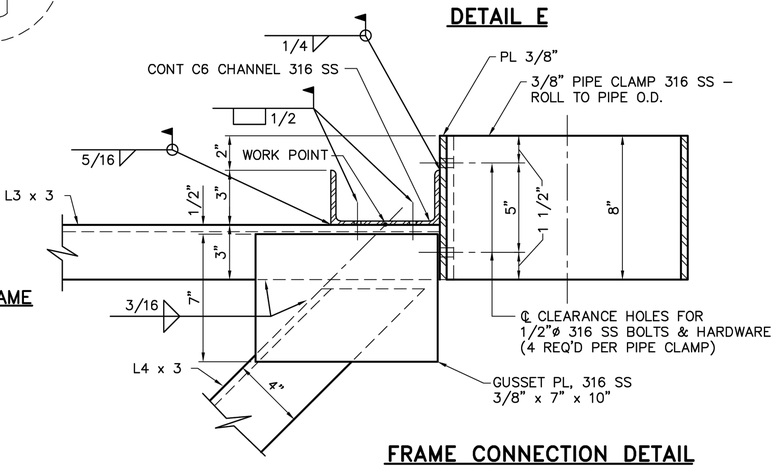

FRAME CONNECTION DETAIL

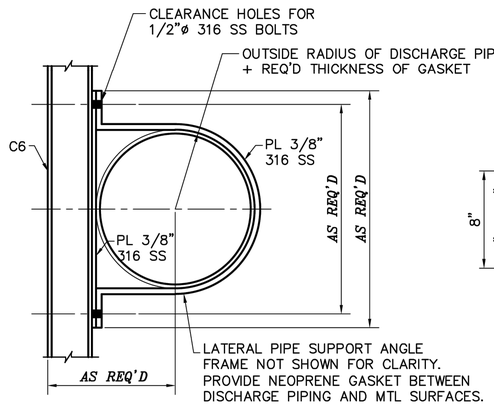

PIPE CLAMP DETAIL

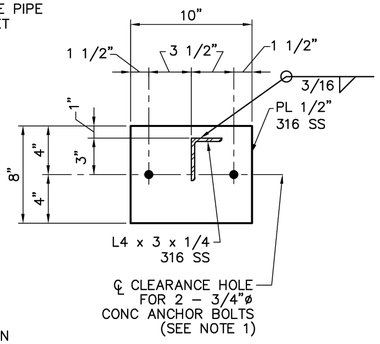

SECTION D Z0C04

NO.	DATE	REVISION	APP.

PAPE–DAWSON

2107 CITYWEST BLVD, 3RD FLR I HOUSTON, TX 77042 I 713.428.2400

TEXAS ENGINEERING FIRM #470 I TEXAS SURVEYING FIRM #10028800

PAPE–DAWSON
2107 CITYWEST BOULEVARD
3RD FLR
HOUSTON, TEXAS 77402
713–428–2400
TX FIRM #470

SURVEYED BY:
PAPE–DAWSON
FB NO. 24–018

THIS DOCUMENT IS RELEASED FOR INTERIM REVIEW UNDER THE AUTHORIZATION OF AMIRHOSSEIN SHOKOUHI, P.E. (#139835) AND IS **NOT TO BE USED FOR CONSTRUCTION.**

CITY OF HOUSTON

HOUSTON PUBLIC WORKS

LIFT STATION REHABILITATION AND RECONSTRUCTION
BEN'S BRANCH, WOODLAND RIDGE, ELMWOOD HILLS, FOREST SHORES, TRAIL RIVER, RIVERLAWN

MECHANICAL

LIFT STATION DETAILS II

WBS NUMBER	FOR CITY OF HOUSTON USE ONLY
R–000267–0180–3	
DRAWING SCALE	
AS NOTED	
CITY OF HOUSTON PM	
BRENDA JOHNSON P.E.	
SHEET NO. 024 OF 338	

GM–02

FILE PATH: K:\Projects\423\77 COH LS Package\00\03 CADD\Plans\Sheets\01 General\CIVIL DETAILS.dwg

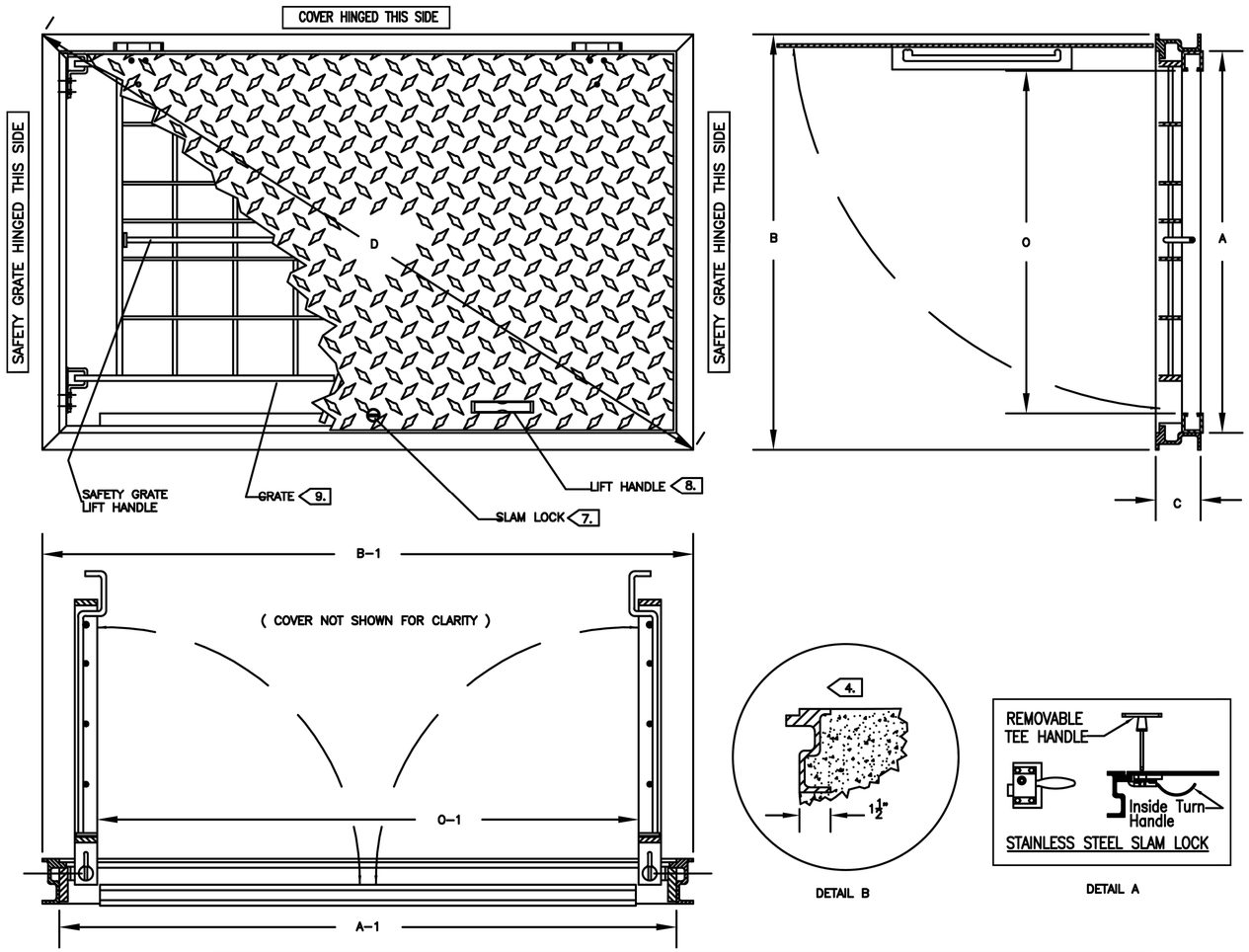

DETAIL B

DETAIL A

PATTERN NO.	DIMENSIONS IN INCHES		UNOBSTRUCTED CLEAR OPENING	HEIGHT	DIAGONAL
ALUMINUM	A x A1	B x B1	O x O1	C	D
FLED-AOSH	PER MANUFACTURER	PER MANUFACTURER	MATCH EXISTING	PER MANUFACTURER	PER MANUFACTURER

1.) MATERIAL SHALL BE 6061-T6 ALUMINUM FOR BARS, ANGLES, AND EXTRUSIONS. 1/4" DIAMOND PLATE SHALL BE 5086 ALUMINUM. EXTERIOR OF FRAME WHICH COMES IN CONTACT WITH CONCRETE SHALL HAVE ONE COAT FOREST GREEN PAINT.

2.) UNIT DESIGNED PEDESTRIAN RATED FOR A MINIMUM LIVE LOAD OF 300 LBS./SQ.FT.

3.) DOOR SHALL BE EQUIPPED WITH A HOLD OPEN ARM. DOOR SHALL LOCK OPEN IN THE 90 DEGREE POSITION. HOLD OPEN ARM SHALL BE FASTENED TO THE FRAME WITH A 1/2" GRADE 316 STAINLESS STEEL BOLT.

4. ANGLE FRAME SHALL BE OF EXTRUDED ALUMINUM, WITH A CONTINUOUS 1-1/2" ANCHOR FLANGE.

5.) COVER HINGES SHALL BE OF HEAVY DUTY DESIGN. MATERIAL SHALL BE GRADE 316 STAINLESS STEEL. EACH HINGE SHALL HAVE A GRADE 316 STAINLESS STEEL, 3/8" DIAMETER HINGE PIN. HINGE SHALL BE FASTENED TO ANGLE AND DIAMOND PLATE WITH GRADE 316 STAINLESS STEEL BOLTS AND NY-LOCK NUTS.

6.) ALL HARDWARE SHALL BE STAINLESS STEEL.

7. EACH HATCH SHALL BE SUPPLIED WITH A GRADE 316 STAINLESS STEEL SLAM LOCK, WITH KEY WAY PROTECTED BY A THREADED PLUG. PLUG SHALL BE FLUSH WITH THE TOP OF THE 1/4" DIAMOND PLATE. SLAM LOCK SHALL BE FASTENED WITH FOUR GRADE 316 STAINLESS STEEL BOLTS AND WASHERS.

8. EACH HATCH SHALL BE EQUIPPED WITH AN ALUMINUM LIFT HANDLE. THE LIFT HANDLE SHALL BE FLUSH WITH THE TOP OF THE 1/4" DIAMOND PLATE.

9. UNITS SHALL BE SUPPLIED WITH A HINGED SAFETY GRATES (SAFETY YELLOW) TO PROVIDE PROTECTION AGAINST FALL THROUGH AND TO CONTROL ACCESS TO THE CONFINED SPACE. (SEE SAFETY GRATE SPECIFICATIONS ON SEPARATE PAGE.)

10.) HATCH COVERS SHALL BE PAINTED FOREST GREEN TO DEMARCATE AND PREVENT VANDALISM.

LIFT STATION WET WELL AND SPLITTER BOX HATCHES

SOURCE: ITT/FLYGT

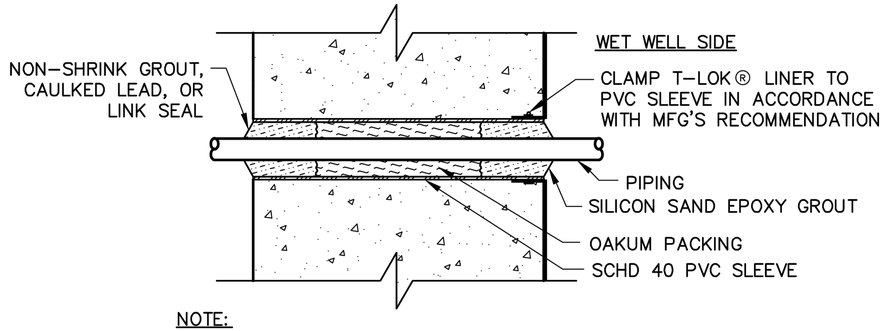

NOTE:
SLEEVED WET WELL PENETRATION IS NOT TO BE USED FOR CONDUIT INSTALLATION. SEE ELECTRICAL DETAIL SHEETS FOR CONDUIT PENETRATIONS.

SLEEVED WET WELL PENETRATION FOR PIPING 4"ø & SMALLER

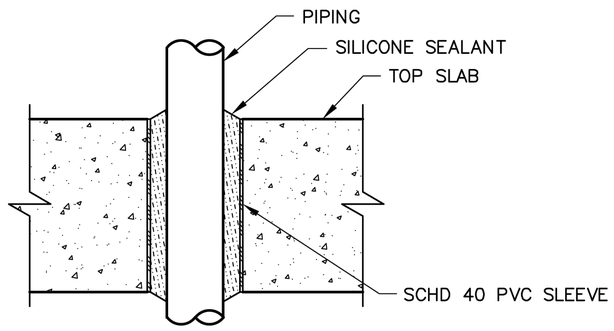

NOTE:
SLEEVED SLAB PENETRATION IS NOT TO BE USED FOR WET WELL PENETRATIONS.

SLEEVED SLAB PENETRATION

NO.	DATE	REVISION	APP.

PAPE-DAWSON
2107 CITYWEST BLVD, 3RD FLR I HOUSTON, TX 77042 I 713.428.2400
TEXAS ENGINEERING FIRM #470 I TEXAS SURVEYING FIRM #10028800

PAPE-DAWSON
2107 CITYWEST BOULEVARD
3RD FLR
HOUSTON, TEXAS 77402
713-428-2400
TX FIRM #470

SURVEYED BY:
PAPE-DAWSON
FB NO. 24-018

THIS DOCUMENT IS RELEASED FOR INTERIM REVIEW UNDER THE AUTHORIZATION OF AMIRHOSSEIN SHOKOUHI, P.E. (#139835) AND IS **NOT TO BE USED FOR CONSTRUCTION.**

CITY OF HOUSTON
HOUSTON PUBLIC WORKS

LIFT STATION REHABILITATION AND RECONSTRUCTION
BEN'S BRANCH, WOODLAND RIDGE, ELMWOOD HILLS, FOREST SHORES, TRAIL RIVER, RIVERLAWN

MECHANICAL

LIFT STATION DETAILS III

WBS NUMBER	FOR CITY OF HOUSTON USE ONLY
R-000267-0180-3	
DRAWING SCALE	
AS NOTED	
CITY OF HOUSTON PM	
BRENDA JOHNSON P.E.	
SHEET NO. 025 OF 338	

GM-03

FILE PATH: K:\Projects\423\77 COH LS Package\00\03 CADD\Plans\Sheets\01 General\CIVIL DETAILS.dwg

STRUCTURAL NOTES:

GENERAL NOTES:

1. VERIFY DIMENSIONS AND CONDITIONS BEFORE BEGINNING WORK. ADVISE ENGINEER IMMEDIATELY OF DISCREPANCIES BETWEEN EXISTING CONDITIONS AND DIMENSIONS, AND INFORMATION SHOWN ON THESE DRAWINGS. CONFIRM THE ABOVE BEFORE PREPARATION AND SUBMITTAL OF SHOP DRAWINGS.

2. USE STRUCTURAL DRAWINGS IN CONJUNCTION WITH PROJECT DRAWINGS BY OTHER DISCIPLINES AND WITH THE SPECIFICATIONS.

3. IF FIELD CONDITIONS ARE DIFFERENT THAN EXPECTED NOTIFY THE ENGINEER AS ADDITIONAL DESIGN MAY BE REQUIRED.

4. CONTRACTOR TO SUBMIT SHOP DRAWINGS TO STIVER ENGINEERING FOR REVIEW PRIOR INSTALLATION.

LOADING CRITERIA:

1. LIFT STATION TOP SLAB: 300 PSF LIVE LOAD

2. ELECTRICAL PLATFORM: XX PSF LOAD

3. EQUIPMENT PAD: SELF WEIGHT + EQUIPMENT WEIGHT

BUILDING CODE:

- IBC 2021
- AMERICAN CONCRETE INSTITUTE BUILDING CODE REQUIREMENTS FOR STRUCTURAL CONCRETE (ACI 318–19)
- AMERICAN CONCRETE INSTITUTE BUILDING CODE REQUIREMENTS FOR ENVIRONMENTAL CONCRETE STRUCTURES (ACI 350–20)
- AMERICAN INSTITUTE OF STEEL CONSTRUCTION MANUAL 15TH EDITION
- STRUCTURAL WELDING CODE – STEEL: AWS D1.1
- STRUCTURAL WELDING CODE – ALUMINUM: AWS D1.6
- STRUCTURAL WELDING CODE – STAINLESS STEEL: AWS D1.6

STRUCTURAL MATERIAL:

1. CONCRETE:

A. CONCRETE SHALL BE PROPORTIONED IN ACCORDANCE WITH ACI 301, SPECIFICATION FOR STRUCTURAL CONCRETE FOR BUILDINGS, AND ACI 318, BUILDING CODE REQUIREMENTS FOR REINFORCED CONCRETE.

B. CONCRETE MINIMUM COMPRESSIVE STRENGTH.

CLASS	CEMENT TYPE	MIN STRENGTH @ 28 DAYS	MAXIMUM W/C	DESCRIPTION
"S"	I OR II	4,000 PSI	0.45 (5 GAL OF WATER PER SACK OF CEMENT)	STRUCTURAL

C. CONCRETE MIX DESIGN SHALL BE SUBMITTED TO THE ENGINEER FOR APPROVAL. THE MINIMUM CEMENT CONTENT SHALL BE DETERMINED BY TRIAL MIXES BASED ON THE PROPOSED AGGREGATE, CEMENT, AND ADMIXTURES.

D. ADMIXTURES SHALL BE SELECTED BASED ON THEIR ABILITY TO REDUCE CONCRETE SHRINKAGE.

E. ENTRAINED AIR IS NOT REQUIRED.

2. REINFORCING STEEL:

A. REINFORCING STEEL SHALL CONFIRM TO ASTM A615, GRADE 60.

B. REBAR TABLE:

BAR SIZE	ALL OTHER TYPES OF DEFORMED BAR POSITION 4 KSI A	ALL OTHER TYPES OF DEFORMED BAR POSITION 4 KSI B	HORIZONTAL DEFORMED BARS WITH MORE THAN 12" FRESH CONCRETE BELOW 4 KSI A	HORIZONTAL DEFORMED BARS WITH MORE THAN 12" FRESH CONCRETE BELOW 4 KSI B
3	14	18	18	24
4	19	25	25	32
5	24	31	31	40
6	28	37	37	48
7	42	54	54	70
8	47	62	62	80
9	54	70	70	90
10	60	78	78	102
11	67	87	87	113

STANDARDS HOOKS		
BAR SIZES	D	A
3	2¼"	6"
4	3	8"
5	3¾"	10"
6	4½"	12"
7	5¼"	14"
8	6"	16"
9	9½"	19"

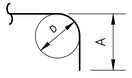

LAP SPLICES OF DEFORMED BARS IN TENSION SHALL BE CLASS B SPLICES EXCEPT THAT CLASS A SPLICES ARE ALLOWED WHEN:
(a) THE AREA OF REINFORCEMENT PROVIDED IS AT LEAST TWICE THAT REQUIRED BY ANALYSIS OVER THE ENTIRE LENGTH OF THE SPLICE, AND
(b) ONE–HALF OR LESS OF THE TOTAL REINFORCEMENT IS SPLICED WITHIN THE REQUIRED LAP LENGTH.

3. STRUCTURAL STEEL:

A. CONNECTIONS:
A.A. BOLTS – STEEL TO STEEL:
HIGH STRENGTH STRUCTURAL BOLTS SHALL BE IN ACCORDANCE WITH ASTM A325. STRUCTURAL BOLTS ARE A325 BOLTS WITH HEAVY HEX NUTS.

BOLT TIGHTENING REQUIREMENTS:

- THE RECOMMENDED METHOD FOR TIGHTENING BOLTS IS THE TURN–OF–THE–NUT–METHOD.
- PROCEDURES FOR THE TURN–OF–THE–NUT–METHOD SHALL BE PER AISC/RCSC SPECIFICATION, SEE AISC 13th ED, CHAPTER 16.2, SECTION 8.1–SNUG–TIGHTENED JOINTS. ALL BOLT HOLES SHALL BE ALIGNED TO PERMIT INSERTION OF THE BOLTS WITHOUT UNDUE DAMAGE TO THE THREADS. BOLTS SHALL BE PLACED IN ALL HOLES WITH WASHERS POSITIONED AS REQUIRED IN SECTION 6.1 AND NUTS THREADED TO COMPLETE THE ASSEMBLY. COMPACTING THE JOINT TO THE SNUG–TIGHT CONDITION SHALL PROGRESS SYSTEMATICALLY FROM THE MOST RIGID PART OF THE JOINT. THE SNUG–TIGHTENED CONDITION IS THE TIGHTNESS THAT IS ATTAINED WITH A FEW IMPACTS OF AN IMPACT WRENCH OR THE FULL EFFORT OF AN IRONWORKER USING AN ORDINARY SPUD WRENCH TO BRING THE CONNECTED PLIES INTO FIRM CONTACT.

A.B. BOLTS – STEEL TO CONCRETE:
ANCHOR BOLTS WITH HEX FORGED HEAD ASTM F 593, STAINLESS STEEL TYPE 304.

A.C. ADHESIVE ANCHOR BOLTS – STEEL TO CONCRETE:
A.C.A. ANCHOR BOLTS SHALL BE HAS–R 304/316 SS.
A.C.B. ADHESIVE SHALL BE HILTI–HIT 500 V3 OR EQUIVALENT. FOLLOW MANUFACTURE'S RECOMMENDED INSTALLATION AND INSPECTION PROCEDURE.

A.D. WELDS:
A.D.A. WELDING SHALL COMPLY WITH AWS D1.1
A.D.B. ELECTRODES SHALL BE E70XX.

B. SECTIONS:
B.A HOT ROLLED STEEL MEMBERS SHALL BE:
B.A.A W SECTION ASTM A992
B.A.B CHANNELS ASTM A36
B.A.C ANGLES ASTM A36

4. STAINLESS STEEL:
A. ANSI TYPE 304/304L
B. SECTIONS: SHAPES AND BARS: ASTM A276.
C. BOLTED CONNECTIONS – BOLTS AND ANCHOR BOLTS:
C.A. MATCH ALLOT OF THE STRUCTURAL MEMBERS CONNECTED.
C.B. TYPE 316/316L: ASTM F 593, GRADE B8M, CLASS 1, HEAVY HEX.
C.C. TYPE 304/304L: ASTM F 593, GRADE B8, CLASS 1, HEAVY HEX.
D. WELDED CONNECTIONS:
D.A. TYPE 316L: E316L – 15 ELECTRODES.
D.B. TYPE 304L: E304L – 15 ELECTRODES.

5. STRUCTURAL ALUMINUM:
A. SECTIONS:
A.A. SHAPES: ASTM B 308, ALLOY 6061–T6.
A.B. SHEET AND PLATE: ASTM B 209, ALLOT 6061–T6.
B. BOLTED CONNECTIONS – BOLTS AND ANCHOR BOLTS:
B.A. STAINLESS STEEL – TYPE 316, ASTM F 593, GRADE B8M, CLASS 1, HEAVY HEX.
C. WELDED CONNECTIONS:
C.A. GAS METAL ARC (MIG) OR GAS TUNGSTEN ARC (TIG) PROCESS USING FILLER ALLOY 4043 ELECTRODES.

COATING:

1. ALL STRUCTURAL AND MISCELLANEOUS STEEL, BOLTS, NUTS AND WASHERS SHALL BE HOT DIPPED GALVANIZED.

CAULK:

1. 2 PART POLYURETHANE

2. SUITABLE FOR VERTICAL INSTALLATION

WATERSTOP:

1. PROVIDE WATERSTOP AT ALL CONSTRUCTION JOINTS AND LOCATIONS AS INDICATED ON THE DRAWINGS

2. WATERSTOP SHALL BE HYDROPHILIC TYPE, ADEKA P–201 OR APPROVED EQUIVALENT.

3. INSTALL WATERSTOP STRICTLY IN ACCORDANCE WITH THE MANUFACTURER'S INSTALLATION GUIDELINES.

4. WHERE CONCRETE COVER IS 2 INCHES OR GREATER, USE ADEKA P–201.

5. WHERE CONCRETE IS LESS THAN 2 INCHES, USE ADEKA P–101.

LIFT STATION–CAISSON NOTES:

1. POUR SCHEDULE AND SEQUENCE:
A. POUR EACH LIFT CONTINUOUSLY AND COMPLETE WITHOUT VERTICAL JOINTS. POUR DIRECTLY INTO FORMS WITHOUT USING HOPPER OR TREMIE HOSE.
B. HORIZONTAL JOINTS SHALL BE LOCATED AS SHOWN ON THE DRAWINGS OR AS REQUIRED.
C. VIBRATE EACH LIFT THOROUGHLY AND ALLOW THE VIBRATOR TO EXTEND WELL INTO THE PREVIOUS LIFT. DO NOT UNDER–VIBRATE.

2. PROVIDE WATERSTOP WHERE INDICATED ON THE DRAWINGS. WATERSTOP SHALL BE HYDROPHILIC WATERSTOP (WS) AS MANUFACTURED BY ADEKA (P–201). INSTALL IN ACCORDANCE WITH MANUFACTURER'S INSTRUCTIONS. USE ADEKA (P–201) ONLY WHERE 2" OR MORE COVER IS PROVIDED. WHERE LESS THAN 2" OF COVER USE ADEKA (P–101).

3. CAREFULLY CLEAN JOINT BETWEEN WALL AND BASE SLAB TO REMOVE ANY SOIL AND LOOSE MATERIAL.

4. PROVIDE 2" MINIMUM CLEAR DISTANCE FOR REINFORCING STEEL IN WALLS
PROVIDE 3" MINIMUM CLEAR DISTANCE TO TOP OF BOTTOM SLAB AND BOTTOM OF TOP SLAB.

5. IF REQUIRED, DEWATER SOILS BELOW THE STRUCTURE TO PREVENT UNSTABLE CONDITIONS IN THE BOTTOM OF THE EXCAVATION DURING CONSTRUCTION AND TO PROVIDE SUITABLE BEARING TO ALLOW THE STRUCTURE TO COME TO A REST AT THE REQUIRED ELEVATION.

6. INSTALL PUMP BASE DIRECTLY ON STRUCTURAL GROUT OR BASE SLAB.
USE CAST–IN–PLACE ANCHOR BOLTS OR EPOXY ANCHORING SYSTEM WITH A MINIMUM EMBEDMENT DEPTH OF 12" INTO THE BASE SLAB
(DO NOT INCLUDE THE DEPTH OF ANY LEVELING GROUT). SEE DETAIL

7. DESIGN LOADS:

A. MINIMUM ALLOWABLE TOTAL GRAVITY BEARING PRESSURE FOR THE BASE OF THE LIFT STATION	3.0 KSF
B. DESIGN GROUND WATER ELEVATION, MSL	54.05
C. AVERAGE UNIFORM LATERAL EARTH PRESSURE (EQUIVALENT FLUID DENSITY)	125 PCF
D. TOP SLAB LIVELOAD (NON TRAFFIC RATED)	300 PSF
E. FACTOR OF SAFETY FOR BUOYANCY DL ONLY	1.21
DEAD + SOIL	1.92
G. MAX ANTICIPATED BEARING PRESSURE DURING SERVICE CONDITIONS	3.21 KSF
H. FACTOR OF SAFETY AGAINST BEARING	XX.XX

STIVER ENGINEERING
1305 Peden Street
Houston, Texas 77006
P (713) 526-3478
stivereng.com
TX Registration No. F-190

PAPE–DAWSON
2107 CITYWEST BLVD, 3RD FLR I HOUSTON, TX 77042 I
7 1 3 4 2 8 2 4 0 0
TEXAS ENGINEERING FIRM #470 I TEXAS SURVEYING FIRM #10028800

SURVEYED BY:
PAPE–DAWSON ENGINEERS
FB NO. 24–018

FOR INTERIM
THIS DOCUMENT IS RELEASED FOR THE PURPOSE OF INTERIM REVIEW UNDER THE AUTHORITY OF JOHN M. STIVER
105179
10/16/25
THIS DOCUMENT IS NOT INTENDED FOR BIDDING, PERMITTING AND/OR CONSTRUCTION PURPOSES
REVIEW ONLY

CITY OF HOUSTON
HOUSTON PUBLIC WORKS

LIFT STATION REHABILITATION AND RECONSTRUCTION
BEN'S BRANCH, WOODLAND RIDGE, ELMWOOD HILLS, FOREST SHORES, TRAIL RIVER, RIVERLAWN
STRUCTURAL

STRUCTURAL NOTES 1

WBS NUMBER	FOR CITY OF HOUSTON USE ONLY
R–000267–0180–3	
DRAWING SCALE	
CITY OF HOUSTON PM	
BRENDA JOHNSON P.E.	
SHEET NO. 22 OF	

GS–01

FILE PATH: F:\SE\PROJECTS\2023 Projects\23154.2–Pape–Dawson–Amir Shokouhi–COH LS Rehab For 6 Lift Stations Pkg 2–Phase II Design\CADD FILES\23154.2 CADD\NOTES\23154.2_NOTES & DETAILS.dwg

FOUNDATION NOTES:

1. GEOTECHINICAL INVESTIGATION REPORT:

   LIFT STATION REHABILITATION AND RECONSTRUCTION DESIGN FEMA WBS No. R-000267-0180-3 COH PROJECT No. 42377-00 CITY OF HOUSTON, TEXAS ATL PROJECT # G24-189.

2. ALLOWABLE SOIL BEARING PRESSURE, EXCAVATION AND BACKFILL FOR FOUNDATIONS AND STRUCTURES SHALL BE AS RECOMMENDED IN THE GEOTECHNICAL REPORT.

3. REMOVE ANY EXISTING CONCRETE SLAB-ON-GRADE AND ALL LOOSE SOIL.

4. IF WET OR SOFT SOILS ARE ENCOUNTERED AT A DEPTH OF LESS THAN 6 INCHES, THEY MAY BE STABILIZED WITH 16 LBS/SQ. YD. OF LIME OR BY REMOVAL AND REPLACEMENT WITH AN ACCEPTABLE MATERIAL COMPACTED IN PLACE.

5. PROOF ROLLING:

   A. THE EXPOSED SUBGRADE SHALL BE PROOF-ROLLED USING A VIBRATORY COMPACTOR OR A LOADED DUMP TRUCK. THE TESTING LABORATORY'S OR OWNER'S REPRESENTATIVE SHALL OBSERVE THE PROOF-ROLLING OPERATION TO DELINEATE AREAS THAT REQUIRE REMEDIATION. REMEDIATION MAY REQUIRE EXCAVATION AND REPLACEMENT, DISKING AND AIR-DRYING OR CHEMICAL TREATMENT.

   B. PROOF ROLLING SHOULD BE ACCOMPLISHED IN ORDER TO LOCATE AND DENSITY ANY WEAK COMPRESSIBLE ZONES UNDER THE BUILDING AND PAVEMENT AREAS AND PRIOR TO PLACEMENT OF THE SELECT FILL BASE. A MINIMUM OF 10 PASSES OF A 25 TON PNEUMATIC ROLLER SHOULD BE USED FOR PLANNING PURPOSES. THE OPERATING LOAD AND TIRE PRESSURE SHOULD CONFORM TO THE MANUFACTURES SPECIFICATION TO PRODUCE A MINIMUM GROUND CONTACT PRESSURE OF 90 POUND PER SQUARE INCH. PROOF ROLLING SHOULD BE PERFORMED UNDER THE OBSERVATION OF THE INTECH GEOTECHNICAL ENGINEER OR HIS REPRESENTATIVE. THE SOILS THAT YIELD OR SETTLE UNDER PROOF ROLLING OPERATIONS SHOULD BE REMOVED, DRIED AND COMPACTED TO REPLACED WITH COMPACTED SELECT FILL TO GRADE. DENSITY TEST SHOULD BE CONDUCTED AS SPECIFIED UNDER CONTROL TESTING AND FILED OBSERVATION AFTER SATISFACTORY PROOF ROLLING OPERATIONS.

6. STRUCTURAL FILL SHALL BE A SELECT MATERIAL DEFINED AS HOMOGENEOUS LEAN CLAY HAVING A PLASTICITY INDEX (PI) BETWEEN 7 AND 20 AND A LIQUID LIMIT LESS THAN 40. IT SHALL BE PLACED AT A MAXIMUM OF 8-INCHES THICK IN LOOSE LIFTS. EACH LIFT SHALL BE COMPACTED TO AT LEAST 95% OF THE MAXIMUM DRY DENSITY AS DETERMINED BY THE STANDARD PROCTOR TEST (ASTM D698). THE MOISTURE CONTENT OF THE STRUCTURAL FILL SHALL BE WITHIN THREE (3) PERCENTAGE POINTS OF THE OPTIMUM MOISTURE CONTENT. BACKFILL AGAINST GRADE BEAMS SHALL COMPLY WITH THE REQUIREMENTS FOR STRUCTURAL FILL.

7. SOILS CLASSIFIED AS CH, MH, ML, SM, GM, OH, OL AND PT UNDER THE USCS ARE NOT CONSIDERED SUITABLE FOR USE AS SELECT FILL MATERIALS AT THE SITE. THE NATIVE SOILS AT THIS SIRE ARE NOT CONSIDERED SUITABLE FOR USE AS SELECT FILL MATERIALS.

8. FILL PLACEMENT THICKNESS GREATER THAN 6-INCHES COMPACTED SHALL BE TESTED AND DOCUMENTED BY THE OWNER'S TESTING LABORATORY. A TESTING FREQUENCY OF ONE (1) IN-PLACE DENSITY AND MOISTURE TEST FOR EACH 2,000 SQ. FT. OR LESS PER LIFT OF FILL WITH A MINIMUM OF THREE TESTS PER LIFT IS REQUIRED.

9. PROVIDE A LEVELING COURSE OF SAND THAT DOES NOT EXCEED A THICKNESS OF 2". IF USED IN COMBINATION WITH A VAPOR RETARDER, IT SHALL BE PLACED BELOW THE VAPOR RETARDER. THE SAND SHALL BE MOISTENED AND COMPACTED WITH A VIBRATING PLATE MACHINE.

10. SLAB-ON-GRADE FOUNDATION SHALL NOT BE CONSTRUCTED ON EITHER WET OR DRY SOIL. IF INCLEMENT WEATHER RESULTS IN WET SOIL, THE FOUNDATION INSTALLATION SHALL BE DELAYED UNTIL THE SOIL HAS DRIED AND A FIRM SUBGRADE IS PRESENT. IF DRY CONDITIONS ARE PRESENT BEFORE CONSTRUCTION, THE SUBGRADE SOIL TO AN 8-INCH DEPTH SHOULD BE MOISTURE ADJUSTED TO AT LEAST ITS OPTIMUM MOISTURE CONTENT OR TWO (2) PERCENTAGE POINTS ABOVE THE OPTIMUM.

11. REINFORCING STEEL SHALL COMPLY WITH ASTM A615, GRADE 60. IT SHALL BE CLEAN AND FREE OF ANY BOND-INHIBITING COATING OR MUD. IT SHALL BE PROPERLY POSITIONED AND SUPPORTED TO ASSURE THE DESIGN SPACING AND COVER IS MAINTAINED. FOR SLABS ON GRADE, USE FULL SIZE CONCRETE BRICKS AS SUPPORT WITH SPACING NOT EXCEEDING 36 INCHES. DO NOT BREAK THE CONCRETE BRICKS.

12. CONCRETE SHALL HAVE A MINIMUM COMPRESSIVE STRENGTH OF 4,000 PSI AT 28 DAYS, AND A MAXIMUM SLUMP OF 5 INCHES, PLUS OR MINUS 1 INCH. THE WATER/CEMENT RATIO SHALL BE EQUAL TO OR LESS THAN 0.5 AND IT SHALL NOT CONTAIN MORE THAN 20% FLY ASH BY WEIGHT OF THE TOTAL CEMENTATION MATERIAL. MIXING WATER SHALL BE OF GOOD QUALITY. CEMENT SHALL BE TYPE I/II AND ALL FROM THE SAME MANUFACTURER. IT SHALL CONTAIN ENTRAINED AIR. IT SHALL CONFORM TO THE REQUIREMENTS OF ACI 301, ACI 318 AND ASTM C94. PLACEMENT SHALL BE AS NEAR AS POSSIBLE TO ITS FINAL LOCATION. USE VIBRATION IN ACCORDANCE WITH THE ACI PUBLICATION AS WELL AS THE PUBLICATION ENTITLED "CONCRETE CONSOLIDATION" BY THE WACKER CORPORATION.

13. REINFORCING STEEL SHALL BE PLACED IN GRADE BEAMS AFTER THE BOTTOM HAS BEEN INSPECTED AND VERIFIED THAT THE BEARING SOILS ARE FIRM AND AT THE CORRECT COMPACTION AND MOISTURE CONTENT. IF WET WEATHER SHOULD OCCUR AND ANY WATER ACCUMULATES, THE REINFORCING STEEL SHALL BE REMOVED AND THE BEARING AND CONDITION OF THE BOTTOM SOILS SHALL BE RESTORED.

14. CONCRETE TEST CYLINDERS SHALL BE MADE BY THE CONTRACTOR IN ACCORDANCE WITH ASTM C31. A MINIMUM OF 4 SIX-INCH DIAMETER CYLINDERS SHALL BE MADE AND TESTED FOR EACH 50 CUBIC YARDS OF CONCRETE POURED.

15. CONCRETE PLACEMENT & CURING:

   A. PLACE CONCRETE IN ACCORDANCE WITH ACI 318 AND ACI 304.

   B. CURE CONCRETE USING PIGMENTED CURING COMPOUND APPLIED IN ACCORDANCE WITH MANUFACTURER'S RECOMMENDATIONS.

16. PROVIDE 3/4" CHAMFER FOR ALL EXTERIOR CORNERS OF CONCRETE.

17. CONCRETE FINISH

   A. SLABS: UNIFORM SANDY TEXTURE, LIGHT BROOM FINISH.

18. SLOPING OF A FINAL, WELL MAINTAINED, IMPERVIOUS CLAY CAP OR PAVEMENT SURFACE (DOWNWARD AWAY FROM THE BUILDING) OVER THE SELECT FILL MATERIAL AND ANY PERIMETER DRAIN EXTENDING BEYOND THE BUILDING LINES, WITH A MINIMUM GRADIENT OF 6IN. IN 5FT.

19. CLAY CAP NOTE:

   PROVIDE A 2 FT MINIMUM IMPERMEABLE CLAY CAP OUTSIDE THE BUILDING FOOTPRINT OR AT THE PERIMETER OF EXPOSED FILL AREAS, SUCH AS FLATWORK OR PAVEMENT EDGES, TO LIMIT SURFACE WATER AND IRRIGATION INFILTRATION. USE CH-CLASSIFIED SOILS PER USCS, FREE OF ORGANIC OR DEGRADABLE MATERIALS. PLACE CLAY IN ≤8" LOOSE LIFTS, COMPACTED TO ≥90% MAX DENSITY PER TXDOT TEX-114-E. MAINTAIN MOISTURE CONTENT FROM OPTIMUM TO +3% ABOVE OPTIMUM.

20. VAPOR RETARDER NOTE:

   ACI 302.1R-15, GUIDE FOR CONCRETE FLOOR AND SLAB CONSTRUCTION RECOMMENDS THAT A VAPOR RETARDER WITH A PERMEANCE OF LESS THAN 0.3 US PERMS (ASTM E 9616). THE THICKNESS OF THE VAPOR RETARDER SHOULD NOT BE LESS THAN 10 MILS, PLACED UNDER THE CONCRETE FLOOR SLAB ON GROUND TO REDUCE THE TRANSMISSION OF WATER VAPOR FROM THE SUPPORTING SOIL THROUGH THE CONCRETE SLAB. THE VAPOR RETARDER SHOULD FUNCTION AS A SLIP-SHEET TO REDUCE SUBGRADE DRAG FRICTION. LOCAL PRACTICE IS TO PLACE THE CONCRETE FLOOR DIRECTLY ON THE VAPOR RETARDER. THE VAPOR RETARDER SHOULD BE INSTALLED ACCORDING TO ASTM E1643.17 WATER THAT COLLECTS WITHIN THE BUILDING PAD AREA AFTER THE VAPOR RETARDER IS PLACED SHOULD BE REMOVED BEFORE CONCRETE PLACEMENT.

STIVER ENGINEERING
1305 Peden Street
Houston, Texas 77006
P (713) 526-3478
stivereng.com
TX Registration No. F-190

PAPE-DAWSON
2107 CITYWEST BLVD, 3RD FLR I HOUSTON, TX 77042 I
713 462 8200 I 713 462 4000
TEXAS ENGINEERING FIRM #470 I TEXAS SURVEYING FIRM #1028800

FOR INTERIM
THIS DOCUMENT IS RELEASED FOR THE PURPOSE OF INTERIM REVIEW UNDER THE AUTHORITY OF JOHN M. STIVER 105179 10/16/25 THIS DOCUMENT IS NOT INTENDED FOR BIDDING, PERMITTING AND/OR CONSTRUCTION PURPOSES
REVIEW ONLY

SURVEYED BY:
PAPE-DAWSON ENGINEERS
FB NO. 24-018

CITY OF HOUSTON
HOUSTON PUBLIC WORKS

LIFT STATION REHABILITATION AND RECONSTRUCTION
BEN'S BRANCH, WOODLAND RIDGE, ELMWOOD HILLS, FOREST SHORES, TRAIL RIVER, RIVERLAWN
STRUCTURAL

STRUCTURAL NOTES 2

WBS NUMBER	FOR CITY OF HOUSTON USE ONLY
R-000267-0180-3	
DRAWING SCALE	
CITY OF HOUSTON PM	
BRENDA JOHNSON P.E.	
SHEET NO. 23 OF	

GS-02

FILE PATH: F:\SE\PROJECTS\2023 Projects\23154.2-Pape-Dawson-Amir Shokouhi-COH LS Rehab For 6 Lift Stations Pkg 2-Phase II Design\CADD FILES\23154.2 CADD\NOTES\23154.2_NOTES & DETAILS.dwg

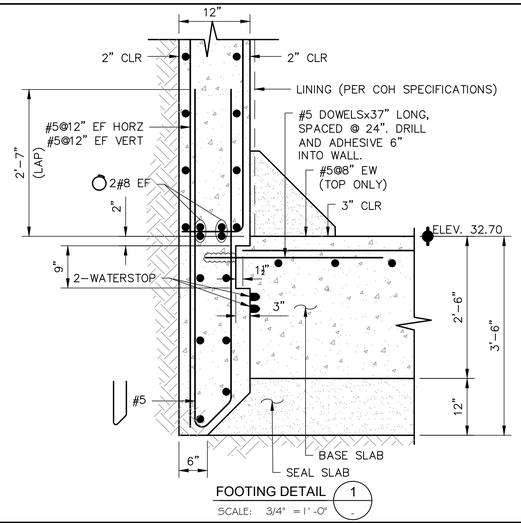

FOOTING DETAIL 1
SCALE: 3/4" = 1'-0"

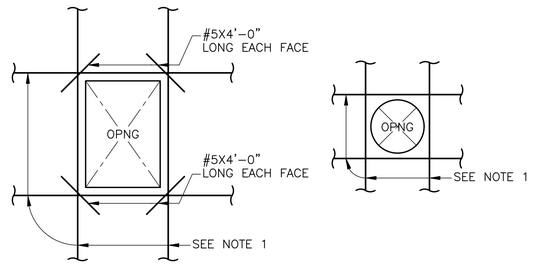

1. ADDITIONAL REINFORCING AS SHOWN ON DRAWINGS.
2. WHEN CIRCUMFERENTIAL BARS ARE INTERRUPTED, PLACE ADDITIONAL BARS EQUAL TO ONE-HALF OF THE NUMBER OF BARS INTERRUPTED AT EACH SIDE OF THE OPENING AT 3" C-C SPACING. THESE BARS SHOULD BE THE ORIGINAL SIZES AND LENGTH OF THOSE OF THE INTERRUPTED BARS OR THE BARS WHOSE TOTAL AREA IS EQUAL TO OR GREATER THAN THE AREA OF THE INTERRUPTED BARS.

TYP. OPENING REINFORCING IN WALLS AND SLAB 2
SCALE: 3/8" = 1'-0"

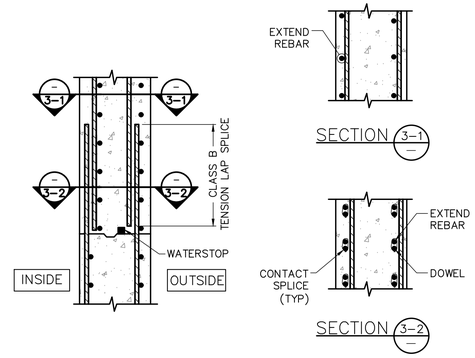

TYP. HORIZONTAL WALL CONSTRUCTION JOINT 3
SCALE: 3/8" = 1'-0"

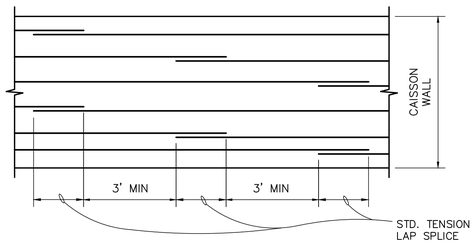

TYP. SPLICE LAYOUT FOR HOOP BARS 4
SCALE: N.T.S.

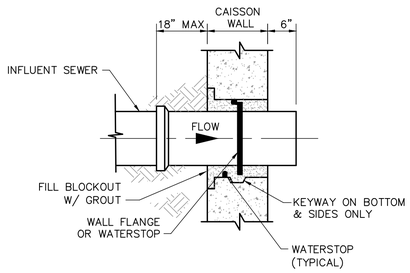

INFLUENT PIPE (CAST-IN-PLACE) 5

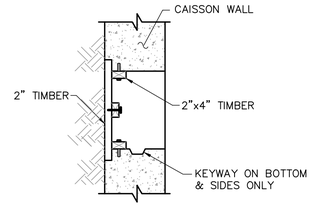

INFLUENT PIPE (TEMPORARY CLOUSURE) 6

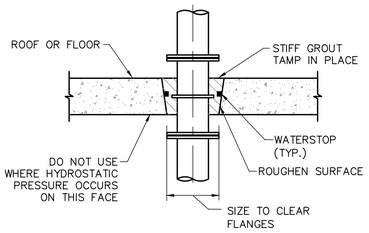

BLOCKOUTS FOR PIPE 7
(USE WHEN PIPE CAN NOT BE INSTALLED WITH STRUCTURAL CONCRETE PLACEMENT)

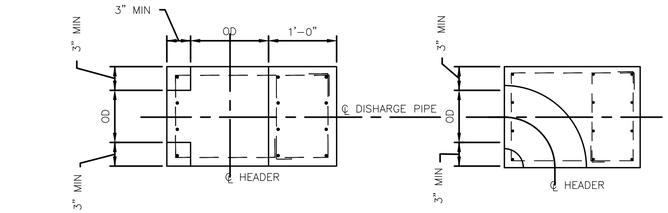

PLAN – THRUST BLOCK @ TEE
PLAN – THRUST BLOCK @ ELBOW

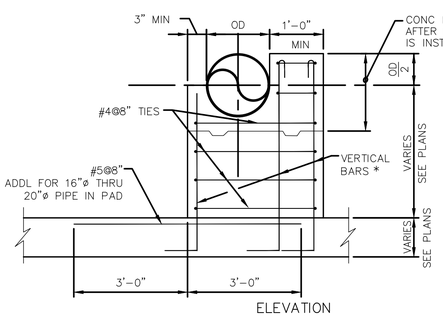

ELEVATION

*VERTICAL BARS

PIPE DIA	NO. OF VERT BARS
4" – 8"	3 – 2#5
10" – 12"	3 – 3#5
14" – 16"	3 – 4#5
18" – 20"	3 – 4#5

TYP. THRUST BLOCK DETAILS 8
NTS

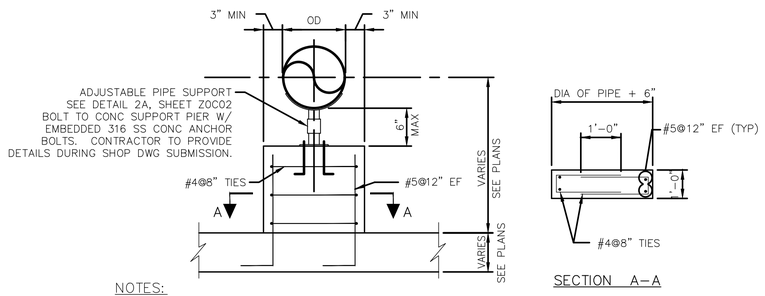

NOTES:

1. CONCRETE SUPPORT PIER IS NOT A THRUST BLOCK AND IS NOT INTENDED TO REPLACE THRUST BLOCK PROVIDED AT OTHER LOCATIONS.
2. PLACE SUPPORT PIER APPROX 9" TO 24" FROM CHECK VALVE, SEE CIVIL DRAWINGS. DO NOT PLACE SUPPORT PIER ON TOP OF EXPANSION JOINT.

SECTION A–A

TYP. CONC. PIPE SUPPORT PIER DETAIL 9
NTS

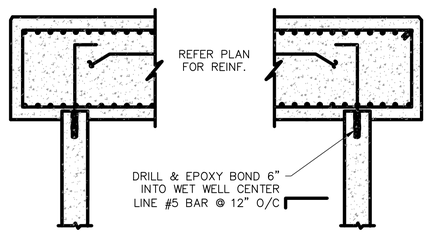

TOP SLAB TO WALL CONNECTION 10
NTS

STIVER ENGINEERING
1305 Peden Street
Houston, Texas 77006
P (713) 526-3478
stivereng.com
TX Registration No. F-190

PAPE-DAWSON
2107 CITYWEST BLVD, 3RD FLR I HOUSTON, TX 77042 I 713 284 2400
TEXAS ENGINEERING FIRM #470 I TEXAS SURVEYING FIRM #10028800

FOR INTERIM
THIS DOCUMENT IS RELEASED FOR THE PURPOSE OF INTERIM REVIEW UNDER THE AUTHORITY OF JOHN M. STIVER 105179 10/16/25 THIS DOCUMENT IS NOT INTENDED FOR BIDDING, PERMITTING AND/OR CONSTRUCTION PURPOSES
REVIEW ONLY

SURVEYED BY:
PAPE-DAWSON ENGINEERS
FB NO. 24-018

CITY OF HOUSTON
HOUSTON PUBLIC WORKS

LIFT STATION REHABILITATION AND RECONSTRUCTION
BEN'S BRANCH, WOODLAND RIDGE, ELMWOOD HILLS, FOREST SHORES, TRAIL RIVER, RIVERLAWN
STRUCTURAL

DETAIL 1 – 10

WBS NUMBER	FOR CITY OF HOUSTON USE ONLY
R-000267-0180-3	
DRAWING SCALE	
CITY OF HOUSTON PM	
BRENDA JOHNSON P.E.	
SHEET NO. 24 OF	

GS-03

FILE PATH: F:\SE\PROJECTS\2023 Projects\23154.2-Pape-Dawson-Amir Shokouhi-COH LS Rehab For 6 Lift Stations Pkg 2-Phase II Design\CADD FILES\23154.2 CADD\NOTES\23154.2_NOTES & DETAILS.dwg

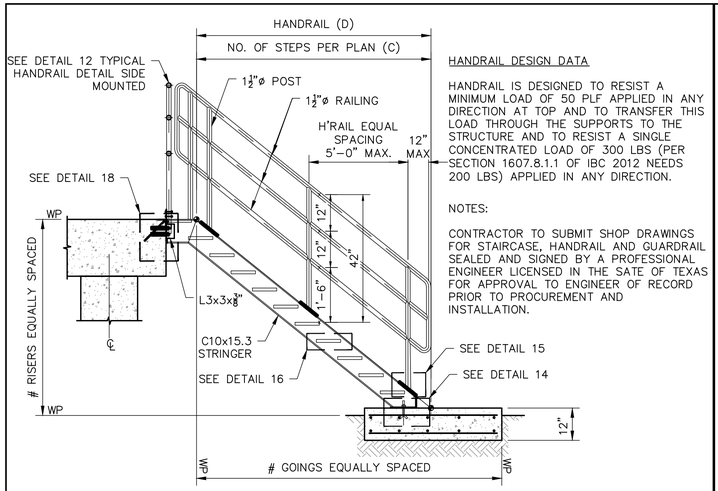

HANDRAIL DESIGN DATA

HANDRAIL IS DESIGNED TO RESIST A MINIMUM LOAD OF 50 PLF APPLIED IN ANY DIRECTION AT TOP AND TO TRANSFER THIS LOAD THROUGH THE SUPPORTS TO THE STRUCTURE AND TO RESIST A SINGLE CONCENTRATED LOAD OF 300 LBS (PER SECTION 1607.8.1.1 OF IBC 2012 NEEDS 200 LBS) APPLIED IN ANY DIRECTION.

NOTES:

CONTRACTOR TO SUBMIT SHOP DRAWINGS FOR STAIRCASE, HANDRAIL AND GUARDRAIL SEALED AND SIGNED BY A PROFESSIONAL ENGINEER LICENSED IN THE SATE OF TEXAS FOR APPROVAL TO ENGINEER OF RECORD PRIOR TO PROCUREMENT AND INSTALLATION.

TYPICAL STAIR DETAIL 11
SCALE: 3/8" = 1'-0"

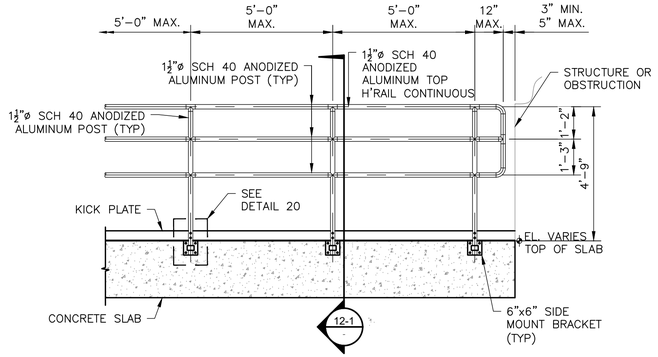

TYPICAL HANDRAIL DETAIL SIDE MOUNTED

DETAIL 12
SCALE: 3/8" = 1'-0"

NOTES:

CORED PENETRATIONS (CAISSON CONSTRUCTION)

A. IDENTIFY PIPE PENETRATION LOCATION WITH 1"ø PLASTIC PIPE SLEEVE.
B. PENETRATION OPENING ø SHALL BE EQUAL TO THE PIPE OUTER DIAMETER + 2 TIMES LINK SEAL THICKNESS
C. PROVIDE ADDITIONAL REINFORCEMENT AROUND PENETRATION PER TYPICAL DETAIL.

SLEEVED PENETRATION (CAISSON CONSTRUCTION)

A. IDENTIFY PIPE PENETRATION LOCATION.
B. PENETRATION OPENING ø SHALL BE EQUAL TO PIPE DIAMETER + 2 TIMES LINK SEAL THICKNESS
C. WATERSTOP MUST BE PROVIDSED CONTINUOUSLY AROUND SLEEVE.
D. PROVIDE ADDITIONAL REINFORCEMENT AROUND PENETRATION PER TYPICAL DETAIL.

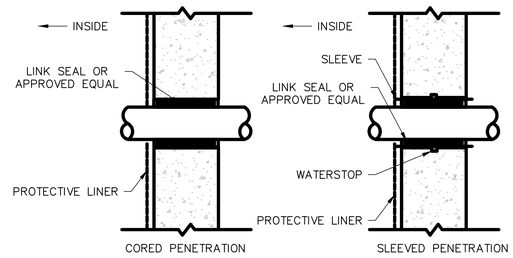

DETAIL 13
NTS

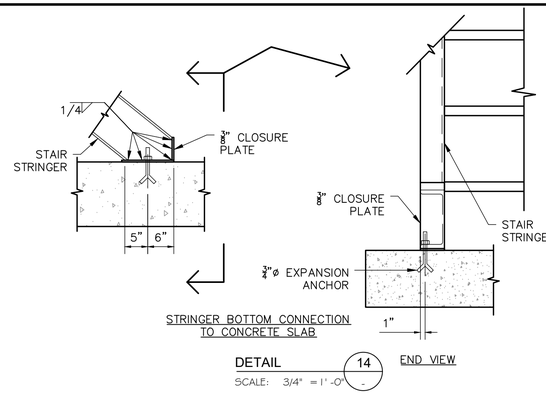

STRINGER BOTTOM CONNECTION TO CONCRETE SLAB

END VIEW

DETAIL 14
SCALE: 3/4" = 1'-0"

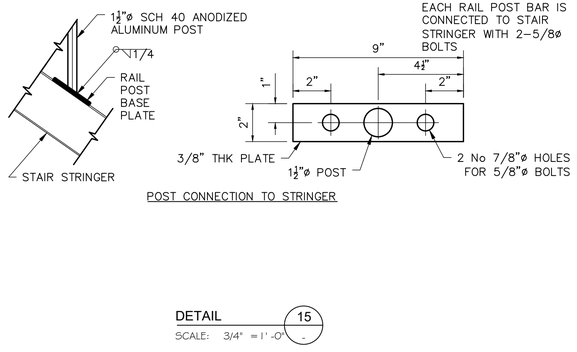

RAIL POST BASE PLATE
NOTES:
EACH RAIL POST BAR IS CONNECTED TO STAIR STRINGER WITH 2-5/8ø BOLTS

POST CONNECTION TO STRINGER

DETAIL 15
SCALE: 3/4" = 1'-0"

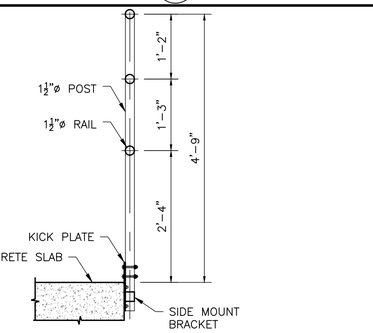

SECTION 12-1
SCALE: 3/4" = 1'-0"

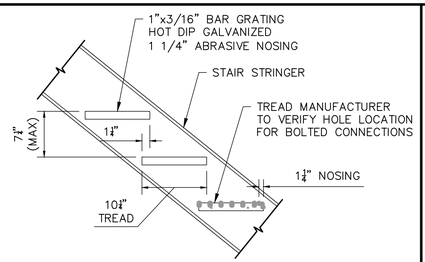

TREADS & RISERS

DETAIL 16
SCALE: 1" = 1'-0"

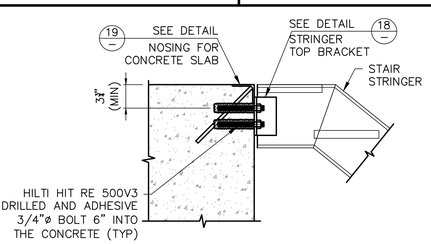

STRINGER TOP CONNECTION TO CONCRETE SLAB

DETAIL 17
SCALE: 1" = 1'-0"

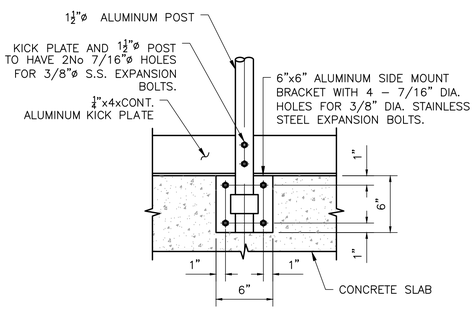

DETAIL 20
SCALE: 1-1/2" = 1'-0"

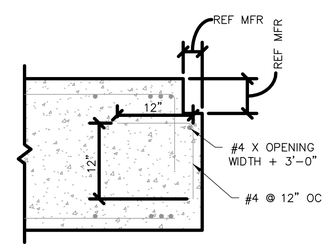

TYPICAL ACCESS COVER LEDGE DETAIL 21
SCALE: 1" = 1'-0"

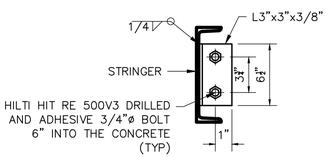

STRINGER TO TOP BRACKET

DETAIL 18
SCALE: 1-1/2" = 1'-0"

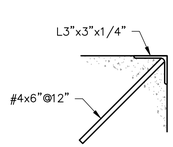

NOSING FOR CONCRETE SLAB

DETAIL 19
SCALE: 1-1/2" = 1'-0"

STIVER ENGINEERING
1305 Peden Street
Houston, Texas 77006
P (713) 526-3478
stivereng.com
TX Registration No. F-190

PAPE-DAWSON
2107 CITYWEST BLVD, 3RD FLR I HOUSTON, TX 77042 I 713.521.5400
TEXAS ENGINEERING FIRM #470 I TEXAS SURVEYING FIRM #10028800

FOR INTERIM
THIS DOCUMENT IS RELEASED FOR THE PURPOSE OF INTERIM REVIEW UNDER THE AUTHORITY OF JOHN M. STIVER 105179 10/16/25
THIS DOCUMENT IS NOT INTENDED FOR BIDDING, PERMITTING AND/OR CONSTRUCTION PURPOSES
REVIEW ONLY

SURVEYED BY:
PAPE-DAWSON ENGINEERS
FB NO. 24-018

CITY OF HOUSTON
HOUSTON PUBLIC WORKS

LIFT STATION REHABILITATION AND RECONSTRUCTION
BEN'S BRANCH, WOODLAND RIDGE, ELMWOOD HILLS, FOREST SHORES, TRAIL RIVER, RIVERLAWN
STRUCTURAL

DETAILS 11 – 21

WBS NUMBER	FOR CITY OF HOUSTON USE ONLY
R-000267-0180-3	
DRAWING SCALE	
CITY OF HOUSTON PM	
BRENDA JOHNSON P.E.	
SHEET NO. 25 OF	

GS-04

FILE PATH: F:\SE\PROJECTS\2023 Projects\23154.2-Pape-Dawson-Amir Shokouhi-COH LS Rehab For 6 Lift Stations Pkg 2-Phase II Design\CADD FILES\23154.2 CADD\NOTES\23154.2_NOTES & DETAILS.dwg

SYMBOLS	DESCRIPTION
52 CS	MEDIUM VOLTAGE DRAWOUT TYPE POWER CIRCUIT BREAKER CS-CONTROL SWITCH
(E.O.) FRAME TRIP	LOW VOLTAGE CIRCUIT BREAKER, 3 POLE UNLESS OTHERWISE NOTED. LSIG IF NOTED MCP IF NOTED ERMS IF NOTED
✳ OR	COMBINATION MOTOR CIRCUIT PROTECTOR AND MAGNETIC MOTOR STARTER, FULL VOLTAGE NON-REVERSING UNLESS OTHERWISE NOTED: ✳ FVR-FULL VOLTAGE REVERSING RVNR-REDUCED VOLTAGE NON-REVERSING 2S1W-TWO SPEED, ONE WINDING 2S2W-TWO SPEED, TWO WINDING
✳ OR	NON-FUSIBLE DISCONNECT SWITCH, 600 VOLT, 3 POLE ✳ AMPERE RATING NOTED IF OTHER THAN 30A
✳ ✱ OR F	FUSIBLE DISCONNECT SWITCH, 600 VOLT, 3 POLE, AMPERE RATING AND FUSE SIZE AS NOTED: ✳ AMPERE RATING NOTED IF OTHER THAN 30A ✱ FUSE RATING
MIS OR I	MOTOR ISOLATION SWITCH, HORSEPOWER RATED
	DRAWOUT TYPE EQUIPMENT OR DEVICE
	MEDIUM VOLTAGE CABLE TERMINATION
	MEDIUM VOLTAGE AIR INTERRUPTER SWITCH
	MEDIUM VOLTAGE FUSED AIR INTERRUPTER SWITCH
	MEDIUM VOLTAGE FUSED MOTOR CONTROLLER
30KVA 480V- 120/208Y K-*	TRANSFORMER, RATINGS AND CONNECTIONS AS NOTED. UNLESS OTHERWISE NOTED ON THE SINGLE LINE DIAGRAMS ALL DRY TYPE TRANSFORMERS SERVICING ADMINISTRATIVE AND LABORATORY SPACES SHALL HAVE A K FACTOR OF 13. ALL OTHER DRY TYPE TRANSFORMERS SHALL HAVE A K-4 RATING. ISOLATION TRANSFORMERS SHALL HAVE A K-20 RATING
✳ A:5	CURRENT TRANSFORMER: ✳ QUANTITY A= PRIMARY AMPERES
✳ PV-SV	POTENTIAL TRANSFORMER: ✳ QUANTITY PV= PRIMARY VOLTAGE SV= SECONDARY VOLTAGE
	GENERATOR, RATINGS AND CONNECTIONS AS NOTED
100A ATS-1 N S	TRANSFER SWITCH AUTOMATIC TRANSFER SWITCH (EG ATS-1) MANUAL TRANSFER SWITCH (EG MTS-1) "N" INDICATES NORMAL SOURCE "S" INDICATES STANDBY SOURCE 100A INDICATES CONTINUOUS CURRENT RATING
✳	VARIABLE SPEED DRIVE CONTROLLER ✳ D.C.= D.C. DRIVE CONTROLLER SCR= SILICON CONTROLLED RECTIFIER VFD= VARIABLE FREQUENCY DRIVE AFD= ADJUSTABLE FREQUENCY DRIVE
	VACUUM CONTACTOR
5KW OR E	UNIT HEATER - ELECTRIC HEATING COIL AND FAN
5KW OR U	UNIT HEATER - STEAM OR WATER HEATING COIL AND FAN
M	MOTOR, NUMERAL INDICATES HORSEPOWER
SPD	SURGE PROTECTION DEVICE
VFD	VARIABLE FREQUENCY DRIVE

SYMBOLS	DESCRIPTION
VM ✳	VOLTMETER (WITH SWITCH IF 3-PHASE)
AM ✳	AMMETER (WITH SWITCH IF 3-PHASE)
*	METER ✳ WM- WATTMETER WHM- WATTHOUR METER WHDM- WATTHOUR DEMAND METER WHDR- WATTHOUR DEMAND RECORDER PF- POWER FACTOR METER RT- RUNNING TIME METER TRANSDUCER AX- CURRENT TRANSDUCER WX- WATT TRANSDUCER
#	RELAY, NO. AS INDICATED 25- SYNCHRONISM CHECK RELAY 27- UNDER VOLTAGE RELAY 38- BEARING PROTECTIVE DEVICE 40- LOSS OF EXCITATION RELAY 42- RUNNING CONTACTOR/PILOT RELAY 46- REVERSE PHASE/PHASE BALANCE/CURRENT RELAY 47- PHASE SEQUENCE VOLTAGE RELAY 49- MACHINE OR TRANSFORMER THERMAL RELAY 50- INSTANTANEOUS OVERCURRENT RELAY 50G- INSTANTANEOUS GROUND 51- TIME OVER CURRENT RELAY 51G- TIME OVERCURRENT RELAY, GROUNDING RESISTOR TYPE 51N- TIME OVERCURRENT RELAY, RESIDUAL TYPE 51V- TIME OVERCURRENT RELAY WITH VOLTAGE RESTRAINT 60- NEGATIVE SEQUENCE VOLTAGE RELAY 62- TIME DELAY RELAY 63- OVER PRESSURE RELAY 67- AC DIRECTIONAL OVERCURRENT RELAY 83- AUTOMATIC SELECTIVE CONTROL OR TRANSFER RELAY 86- LOCKING-OUT RELAY 87- DIFFERENTIAL PROTECTIVE RELAY B- SUFFIX INDICATES "BUS" G- SUFFIX INDICATES "GENERATOR" GF- GROUND FAULT ST- SHUNT TRIP T- SUFFIX INDICATES "TRANSFORMER" X- SUFFIX INDICATES "AUXILIARY"
*	SPECIAL CAPACITOR ✳ SC- SURGE CAPACITOR PF- POWER FACTOR CORRECTION CAPACITOR INCLUDING INDUCTIVE LINK AS NEEDED
	PUSH BUTTON, MOMENTARY CONTACT, SPRING RETURN, NORMALLY CLOSED
	PUSH BUTTON, MOMENTARY CONTACT, SPRING RETURN, NORMALLY OPEN
E-STOP	EMERGENCY STOP PUSH BUTTON WITH RED MUSHROOM HEAD OPERATOR (MAINTAINED CONTACT)
✳ N	STOP PUSH BUTTON WITH RED HEAD OPERATOR (MAINTAINED CONTACT) WITH LOCKABLE OPTION ✳: E-STOP ✳: STOP
STOP START	START-STOP PUSH BUTTON CONTROL STATION (MOMENTARY CONTACT) "L" DENOTES LOCKOUT TYPE
STOP START	START-STOP PUSH BUTTON CONTROL STATION, MAINTAINED CONTACT WITH LOCKOUT DEVICE ON STOP
OFF ON	OFF/ON SELECTOR SWITCH
A B C ✳ (XOO) (OOX)	3 POSITION SELECTOR SWITCH, MAINTAINED CONTACT O-OPEN X-CLOSED

POSITION	TOP CONTACT	MIDDLE CONTACT	BOTTOM CONTACT
A	X	O	O
B	0	0	O
C	0	O	X

✳ NAMEPLATE (A/B/C)
HOA- HAND/OFF/AUTO
HOR- HAND/OFF/REMOTE
LOR- LOCAL/OFF/REMOTE
RSL- RAISE/STOP/LOWER
TOA- TEST/OFF/AUTO

NOTE: 2 POSITION MULTI-CONTACT SWITCH FOLLOWS SAME CONVENTION

M #	MOTOR STARTER COIL, NUMBER AS INDICATED
CR #	CONTROL RELAY COIL, NUMBER AS INDICATED
	RVSS: REDUCED VOLTAGE STATIC SOLID SOFT STARTER

SYMBOLS	DESCRIPTION
*	PILOT LIGHT, COLOR AS NOTED ✳ R- RED G- GREEN B- BLUE W- WHITE A- AMBER
* PTT	PILOT LIGHT, PUSH-TO-TEST TYPE, COLOR AS NOTED ABOVE.
TD	TIME DELAY RELAY RANGE AS NOTED SET POINT AS NOTED TDD-TIME DELAY AFTER DE-ENERGIZATION-OFF DELAY TDE-TIME DELAY AFTER ENERGIZATION-ON DELAY
	NOTC-NORMALLY OPEN, TIMED CLOSING WHEN ENERGIZED
	NCTO-NORMALLY CLOSED, TIMED OPENING WHEN ENERGIZED
	NOTO-NORMALLY OPEN, TIMED OPENING WHEN DE-ENERGIZED
	NCTC-NORMALLY CLOSED, TIMED CLOSING WHEN DE-ENERGIZED
⊗	FIELD INSTRUMENT, TAG NO. OR LOOP # AS INDICATED ✳INDICATES INSTRUMENT TYPE DEFINED ON LOOP SHEETS ## - INDICATES LOOP NO.
OR ⊗	LIQUID LEVEL (FLOAT) SWITCH NORMALLY OPEN, CLOSES ON RISING LEVEL NORMALLY CLOSED, OPENS ON RISING LEVEL NORMALLY OPEN, CLOSES ON DROPPING LEVEL NORMALLY CLOSED, OPENS ON DROPPING LEVEL
OR ⊗	PRESSURE OR VACUUM SWITCH NORMALLY OPEN, CLOSES ON RISING PRESSURE NORMALLY CLOSED, OPENS ON RISING PRESSURE NORMALLY OPEN, CLOSES ON DROPPING PRESSURE NORMALLY CLOSED, OPENS ON DROPPING PRESSURE
OR ⊗	TEMPERATURE SWITCH OR THERMOSTAT NORMALLY OPEN, CLOSES ON RISING TEMPERATURE NORMALLY CLOSED, OPENS ON RISING TEMPERATURE NORMALLY OPEN, CLOSES ON DROPPING TEMPERATURE NORMALLY CLOSED, OPENS ON DROPPING TEMPERATURE
OR ⊗	FLOW SWITCH (AIR, WATER, ETC.) NORMALLY OPEN, CLOSES ON INCREASED FLOW NORMALLY OPEN, CLOSES ON DROPPING FLOW NORMALLY CLOSED, OPENS ON INCREASED FLOW NORMALLY CLOSED, OPENS ON DROPPING FLOW
OR ⊗	POSITION (LIMIT) SWITCH NORMALLY OPEN NORMALLY OPEN - HELD CLOSED NORMALLY CLOSED NORMALLY CLOSED - HELD OPEN
OR ⊗	TORQUE SWITCH NORMALLY CLOSED, OPENS ON HIGH TORQUE
	CONDUCTORS OR CONDUITS CROSSING PATHS BUT NOT CONNECTED
	CONDUCTORS ELECTRICALLY CONNECTED
FAN	SUPPLY/EXHAUST FAN

SYMBOLS	DESCRIPTION
LA SC	LIGHTNING ARRESTER/SURGE CAPACITOR
OR	GROUND ROD GROUND ROD WELL
30A	FUSE, AMPERE RATING AS NOTED
OR HTR	HEATER
	INDUCTOR
TG	TACHOMETER GENERATOR
	CONTACT, NORMALLY OPEN (NO)
	CONTACT, NORMALLY CLOSED (NC)
	OVERLOAD RELAY HEATER
K	KEY INTERLOCK
TB	TERMINAL OR TEST BLOCK
RTD	RESISTANCE TEMPERATURE DETECTOR
VE	VIBRATION DETECTOR
DM	DAMPER MOTOR
ETM OR	ELAPSED TIME METER
MOV	MOTOR OPERATED VALVE
	PUSH BUTTON STATION, REFER TO ELECTRICAL SCHEMATIC FOR NUMBER OF DEVICES.
J	JUNCTION BOX
JP	POWER JUNCTION BOX
JI	4-20mA SIGNAL JUNCTION BOX
JC	CONTROL JUNCTION BOX
PB	PULL BOX
TC	TERMINATION CABINET
	REMOTE DEVICES
5	MOV WITHOUT INTEGRATED DISCONNECT
5	MOV WITH INTEGRATED DISCONNECT
	INDICATES LIMITS OF EQUIPMENT OR WIRING ENCLOSURE
MPR	(MPR) MOTOR PROTECTION RELAY

GENERAL NOTE

THIS IS A STANDARD LEGEND. SOME SYMBOLS MAY NOT APPEAR ON THE DRAWINGS.

NO.	DATE	REVISION	APP.

PAPE–DAWSON
2107 CITYWEST BLVD, 3RD FLR I HOUSTON, TX 77042 I 713.428.2400
TEXAS ENGINEERING FIRM #470 I TEXAS SURVEYING FIRM #10028800

GAI
Gupta & Associates, Inc.
CONSULTING ENGINEERING
Registration No. F-2593
302 Dennis St.
Houston, Texas 77006
Tel: 713-636-2936
Fax: 713-636-2987
email: hforouzan@guiconsulting.com

THIS DOCUMENT IS RELEASED FOR INTERIM REVIEW UNDER THE AUTHORIZATION OF HOSS FOROUZAN, P.E. (#77748) AND IS **NOT TO BE USED FOR CONSTRUCTION.**

SURVEYED BY:
PAPE–DAWSON ENGINEERS
FB NO. 24–018

CITY OF HOUSTON
HOUSTON PUBLIC WORKS

LIFT STATION REHABILITATION AND RECONSTRUCTION
BEN'S BRANCH, WOODLAND RIDGE, ELMWOOD HILLS, FOREST SHORES, TRAIL RIVER, RIVERLAWN

ELECTRICAL

ELECTRICAL LEGENDS & SYMBOLS – I

WBS NUMBER	FOR CITY OF HOUSTON USE ONLY
R–000267–0180–3	
DRAWING SCALE	
AS NOTED	
CITY OF HOUSTON PM	
BRENDA JOHNSON P.E.	
SHEET NO. XX OF XX	

GE–01

FILE PATH: O:\H8107_Lift Station Rehabilitation And Reconstruction (Pape Dawson)\6 Drawings\Electrical\Working\H8107_GE–01.dwg

SYMBOLS	DESCRIPTION
LA-3 (A, b)	REFER TO LIGHT FIXTURE SCHEDULE FOR TYPE FIXTURE: "A"- FIXTURE TYPE "b"- CONTROLLED BY SWITCH "b" "LA-3"- CIRCUIT 3 FROM PANEL LA
b, A, LA-3	REFER TO LIGHT FIXTURE SCHEDULE FOR TYPE FIXTURE, NOTATIONS SAME AS ABOVE
A, LA-3 OR LA-3 (A, NS)	INDICATES LIGHT FIXTURES WHICH ARE NONSWITCHED, NOTATIONS SAME AS ABOVE "NS" - NONSWITCHED
LA-3 (A, b)	WALL MOUNTED LIGHTING FIXTURE, NOTATIONS SAME AS ABOVE
LA-3 (A, b)	POLE MOUNTED LIGHTING FIXTURE, NOTATIONS SAME AS ABOVE
A, LA-3	EMERGENCY LIGHTING BATTERY UNIT WITH TWO LAMP HEADS, NOTATIONS SAME AS ABOVE
A	REMOTE EMERGENCY ADJUSTABLE WALL LIGHTING FIXTURE WITH TWO LAMP HEADS, NOTATIONS SAME AS ABOVE
A, LA-3	CEILING MOUNTED EXIT SIGN, NOTATIONS SAME AS ABOVE
A, LA-3	WALL OUTLET EXIT SIGN. ARROW INDICATES DIRECTION OF EGRESS, NOTATIONS SAME AS ABOVE
	CONDUIT, EXPOSED/SURFACE MOUNTED
	CONDUIT OR DUCTBANK, CONCEALED
	CONDUIT, EXPOSED/SURFACE MOUNTED, TURNING UP
	CONDUIT, EXPOSED/SURFACE MOUNTED, TURNING DOWN
	CONDUIT STUBBED OUT AND CAPPED
2(3#3/0+1#2G, 3"C)	DENOTES A QUANTITY OF 2 SETS OF THREE (3) NO.3/0 AWG CONDUCTORS AND 1 NO.AWG GROUND CONDUCTOR EACH INSTALLED IN 3" CONDUIT.
2(2/C#16TS)	DENOTES A QUANTITY OF TWO INSTRUMENT CABLES. EACH CONSISTS OF TWO NO.16 AWG CONDUCTORS TWISTED TOGETHER AND COVERED WITH A METALLIC SHIELD AND AN OVERALL PROTECTIVE JACKET. REFER TO THE SPECIFICATIONS FOR THE EXACT CABLE TO BE PROVIDED.
3(4"C)	DENOTES A QUANTITY OF THREE 4-INCH CONDUITS.
	FLEXIBLE METAL CONDUIT "WHIP" (2#12, #12G, 3/4"C UNLESS OTHERWISE NOTED) FOR RECESSED LIGHTING FIXTURES AND LIQUID TIGHT MOTOR CONNECTIONS
LP#-1,3	HOMERUN, CIRCUITS 1 AND 3 RUN TO PANEL LP-1
$b	SINGLE POLE SWITCH "b"- INDICATES SWITCH LEG SHALL CONTROL LIGHT FIXTURES WITH "b" DESIGNATION
$b^x	MULTI POLE SWITCH "x"- INDICATES NUMBER OF POLE "b"- NOTATIONS SAME AS ABOVE
$b^P	SINGLE POLE SWITCH AND PILOT LIGHT, "b"- NOTATIONS SAME AS ABOVE
$b^D	DIMMER LIGHTING CONTROL SWITCH, "b"- NOTATIONS SAME AS ABOVE
$b^TM	TIME SWITCH, "b"-NOTATIONS SAME AS ABOVE
$^M	MANUAL MOTOR STARTER /DISCONNECT
$^OS	SINGLE POLE SWITCH WITH OCCUPANCY SENSOR
$^DM	SINGLE POLE DIMMER SWITCH
$x_b^xx	SWITCH ENCLOSURE "x"- NOTATIONS SAME AS ABOVE "b"- NOTATIONS SAME AS ABOVE "xx"- INDICATES ENCLOSURE TYPE
LC-1	LIGHTING CONTACTOR WITH NUMBER OF POLES AS INDICATED

SYMBOLS	DESCRIPTION
L*-## OR L*-##	LIGHTING PANELBOARD (TYPICAL 120V/240V OR 120V/208V)
H*-## OR H*-##	DISTRIBUTION PANELBOARD (TYPICAL 277V/480V)
LA-3	DUPLEX RECEPTACLE, 20A, 120V, 2P, 3W GFI- GROUND FAULT INTERRUPTER TYPE WP- WEATHERPROOF "LA-3"- CIRCUIT 3 FROM PANEL LA
	WELDING RECEPTACLE
	20A, 240V, 2P, 3W, RECEPTACLE
	CLASS 1, DIVISION 1, RATED TWIST LOCK RECEPTACLE, VOLTAGE AND AMPERAGE RATING AS NOTED
	SINGLE FACE, SINGLE GANG PEDESTAL WITH 20A, 120V, 2P, 3W DUPLEX RECEPTACLE, FURNISHED AND INSTALLED UNDER DIVISION 16 UNLESS OTHERWISE NOTED. * DENOTES FURNISHED UNDER OTHER DIVISIONS OF THE SPECIFICATIONS BUT INSTALLED UNDER DIVISION 16
D	DOUBLE FACE, SINGLE GANG PEDESTAL WITH 20A, 120V, 2P, 3W DUPLEX RECEPTACLE AND 20A, 240V, 2P, 3W SINGLE RECEPTACLE, FURNISHED AND INSTALLED UNDER DIVISION 16 UNLESS OTHERWISE NOTED. * DENOTES FURNISHED UNDER OTHER DIVISIONS OF THE SPECIFICATIONS BUT INSTALLED UNDER DIVISION 16
	DOUBLE RECEPTACLE, 20A, 120V, 2P, 3W MOUNTED IN BOX CURB FURNISHED UNDER OTHER DIVISIONS OF THE SPECIFICATIONS BUT INSTALLED UNDER DIVISION 16
	SINGLE GANG 20A, 120V, 3P, 3W RECEPTACLE
	QUAD RECEPTACLE
OS	OCCUPANCY SENSOR CAPABLE OF VACANCY
PC	PHOTOCELL
	QUICK CONNECT TERMINALS

TAGGING		
EQUIPMENT	EQUIPMENT TAG	CONDUIT TAG
MOTOR CONTROL CENTER	MCC-1	MC1-XX
SWITCHBOARD	SWBD-1	SB1-XX
SWITCHGEAR	SWGR-1	SG1-XX
PROGRAMMABLE LOGIC CABINET	PLC-1	PL1-XX
VARIABLE FREQUENCY DRIVE	VFD-1	VF1-P
LOW VOLTAGE TRANSFORMER	TX-LX OR TX-HX	TXLX-P OR TXHX-P
SERVICE TRANSFORMER	TX-1	TX1-P
GENERATOR	GEN-1	GN1-X
LIGHTING/POWER PANELBOARD	LP/PP-XX	XX-XX
AUTOMATIC TRANSFER SWITCH	ATS-1	AT1-XX
TYPICAL TAG FOR CONDUIT FROM THIS EQUIPMENT TO DOWN STREAM LOAD FOR EXAMPLE.		

EXAMPLE LEGEND:

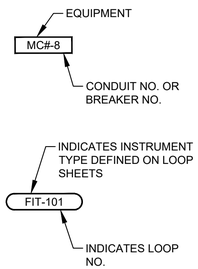

SYMBOLS	DESCRIPTION
COMMUNICATIONS SYSTEMS	
	TELEPHONE OUTLET
	DATA OUTLET
P	DATA INPUT/OUTPUT CABLE OUTLET. "P" DENOTES PROCESS COMPUTER SYSTEM
	VOICE/DATA OUTLET
S	PAGING SPEAKER HORN
S	PAGING SPEAKER BI-DIRECTIONAL
S	PAGING SPEAKER, CEILING MOUNTED TYPE
S	PAGING SPEAKER, WALL MOUNTED TYPE
SECURITY SYSTEMS	
SAP	SECURITY ALARM PANEL
DS	SECURITY ALARM DOOR SWITCH
KP	SECURITY ALARM KEY PAD
CR	SECURITY SYSTEM CARD ACCESS READER
WS	SECURITY ALARM WINDOW SWITCH
MD	SECURITY ALARM MOTION DETECTOR
	SECURITY CAMERA CCTV- CLOSED CIRCUIT TV CAMERA PTZ- PAN, TILT, ZOOM CAMERA LENS CONTROLS
GB	GLASS BREAK DETECTOR
ACP	ACCESS CONTROL PANEL
FIRE ALARM SYSTEMS	
FACP	FIRE ALARM CONTROL PANEL
SD	SMOKE DETECTOR : D- DENOTES DUCT SMOKE DETECTOR R- DENOTES FIXED TEMPERATURE RATE-OF-RISE TYPE.
F	FIRE ALARM MANUAL PULL STATION, MOUNT AT 4'-0"
	ALARM HORN, MOUNT AT 7'-6" : F- DENOTES FIRE ALARM
	ALARM STROBE, MOUNT AT 6'-8" : F- DENOTES FIRE ALARM
	ALARM HORN AND STROBE LIGHT COMBINATION, MOUNT AT 6'-8" : F- DENOTES FIRE ALARM

ABBREVIATIONS	
AC	ALTERNATING CURRENT
AFD	ADJUSTABLE FREQUENCY DRIVE
AFF	ABOVE FINISHED FLOOR
AG	ABOVE GRADE
ALUM	ALUMINUM
AMP/A	AMPERE
ATS	AUTOMATIC TRANSFER SWITCH
AUTO	AUTOMATIC
AUX	AUXILIARY
AWG	AMERICAN WIRE GAUGE
C	CONDUIT
CB	CIRCUIT BREAKER
CKT	CIRCUIT
CLF	CURRENT LIMITING FUSE
CP	CONTROL PANEL
CPT	CONTROL POWER TRANSFORMER
CR	CONTROL RELAY
CS	CONTROL SWITCH
CT	CURRENT TRANSFORMER
CU	COPPER
DC	DIRECT CURRENT
DI	DOOR INTERLOCK
DN	DOWN
DWG	DRAWING
EHH	ELECTRICAL HANDHOLE
EC	EMPTY CONDUIT
ELEC	ELECTRICAL
ELEV	ELEVATION
EM	EMERGENCY
EMH	ELECTRICAL MANHOLE
EO	ELECTRICALLY OPERATED
ERMS	ENERGY-REDUCING MAINTENANCE SWITCH
FBO	FURNISHED BY OTHERS
FO	FIBER OPTIC
FRP	FIBERGLASS REINFORCED POLYESTER
FU	FUSE
GCP	GENERATOR CONTROL PANEL
GEN	GENERATOR
G, GRD	GROUND
GFI	GROUND FAULT INTERRUPTER
GFCI	GROUND FAULT CIRCUIT INTERRUPTER
GO	GATE OPERATOR
GRS	GALVANIZED RIGID STEEL
HH	HANDHOLE
HT	HEIGHT
HTP	HEAT TRACE PANEL
HZ	HERTZ
IMH	INSTRUMENT MAN HOLE
INST	INSTRUMENT
LA	LIGHTNING ARRESTER
LC	LIGHTNING CONTACTOR
LCP	LOCAL CONTROL PANEL
LGTS	LIGHTS
LP	LIGHTING PANEL
	CONTINUED ABOVE RIGHT

	CONTINUED BELOW LEFT
LSIG	LONG TIME/SHORT TIME/ INSTANTANEOUS/GROUND FAULT FEATURE INCLUDED
MCC	MOTOR CONTROL CENTER
MCP	MOTOR CIRCUIT PROTECTOR
MFR	MANUFACTURER
MH	MANHOLE
MLO	MAIN LUGS ONLY
MTG	MOUNTING
MTD	MOUNTED
MTS	MANUAL TRANSFER SWITCH
NC	NORMALLY CLOSED
NEC	NATIONAL ELECTRICAL CODE
NO	NORMALLY OPEN OR NUMBER
NTS	NOT TO SCALE
OL	OVERLOAD
OLX	OVERLOAD CONTROL RELAY
PB	PUSH BUTTON OR PULL BOX
PCC	PUMP CONTROL CONSOLE
PPR	PHASE PROTECTIVE RELAY
PPU	PERPETUAL POWER UNIT
PFR	PHASE FAILURE RELAY
PH	PHASE
PNLBD	PANELBOARD
PR	PAIR
PT	POTENTIAL TRANSFORMER
PTT	PUSH TO TEST TYPE
PVC	POLYVINYL CHLORIDE
QTY	QUANTITY
RCP	RELAY CONTROL PANEL
RECP	RECEPTACLES
RVSS	REDUCED VOLTAGE SOFT STARTER
SC	SURGE CAPACITOR
SCH	SCHEMATIC
SCCR	SHORT CIRCUIT CURRENT RATING
SEC	SECONDS OR SECONDARY
SH	SHIELDED OR SHEET
SHT	SHEET
SM	MOTOR RATED SWITCH
SN	SOLID NEUTRAL
SS	STAINLESS STEEL
ST	STARTER
SV	SOLENOID VALVE
SW	SWITCH
SWBD	SWITCHBOARD
SWGR	SWITCHGEAR
TC	TERMINATION CABINET
TEL	TELEPHONE
TO	TIME DELAY ON OPENING
TS	TEMPERATURE SWITCH
TVSS	TRANSIENT VOLTAGE SURGE SUPPRESSOR
TSW	TWISTED SHIELDED WIRE
TYP	TYPICAL
UG	UNDERGROUND
V	VOLTS
VFD	VARIABLE FREQUENCY DRIVE
VO	VALVE OPERATOR
W	WIRE
WP	WEATHERPROOF
XP	EXPLOSION PROOF
XFMR	TRANSFORMER

GENERAL NOTE

THIS IS A STANDARD LEGEND. SOME SYMBOLS MAY NOT APPEAR ON THE DRAWINGS.

NO.	DATE	REVISION	APP.

PAPE–DAWSON
2107 CITYWEST BLVD, 3RD FLR I HOUSTON, TX 77042 I 713.428.2400
TEXAS ENGINEERING FIRM #470 I TEXAS SURVEYING FIRM #10028800

GAI
Gupta & Associates, Inc.
CONSULTING ENGINEERING
Registration No. F-2593
302 Dennis St.
Houston, Texas 77006
Tel: 713-636-2936
Fax: 713-636-2987
email: hforouzan@gaiconsulting.com

THIS DOCUMENT IS RELEASED FOR INTERIM REVIEW UNDER THE AUTHORIZATION OF HOSS FOROUZAN, P.E. (#77748) AND IS **NOT TO BE USED FOR CONSTRUCTION.**

SURVEYED BY:
PAPE–DAWSON ENGINEERS
FB NO. 24–018

CITY OF HOUSTON
HOUSTON PUBLIC WORKS

LIFT STATION REHABILITATION AND RECONSTRUCTION
BEN'S BRANCH, WOODLAND RIDGE, ELMWOOD HILLS, FOREST SHORES, TRAIL RIVER, RIVERLAWN

ELECTRICAL

ELECTRICAL LEGENDS & SYMBOLS – II

WBS NUMBER	FOR CITY OF HOUSTON USE ONLY
R–000267–0180–3	
DRAWING SCALE	
AS NOTED	
CITY OF HOUSTON PM	
BRENDA JOHNSON P.E.	
SHEET NO. XX OF XX	

GE–02

FILE PATH: O:\H8107_Lift Station Rehabilitation And Reconstruction (Pape Dawson)\6 Drawings\Electrical\Working\H8107_GE–02.dwg

LUMINAIRE SCHEDULE

FIXTURE TYPE	VOLTAGE	LAMP TYPE	TOTAL INPUT WATTS	TOTAL OUTPUT LUMENS	MOUNT	DESCRIPTION	MAKE/MODEL
A	120/277V UNIVERSAL DRIVER	LED	42	4000	SUSPENDED	LINEAR LED LUMINAIRE, UV-STABILIZED, INJECTION-MOLDED, IMPACT-RESISTANT, FROSTED POLYCARBONATE HOUSING, -29°C TO 40°C OPERATING TEMPERATURE, 4000K COLOR TEMPERATURE, 80CRI, UV-STABILIZED, INJECTION-MOLDED, IMPACT-RESISTANT CLEAR POLYCARBONATE LENS, UL 1598 WET LOCATION LISTED.	LITHONIA ARCHWAY VAP LED SERIES VAP-4000L-PCL-WD-MVOLT-40K-80CRI-VAPCMB DAY-BRITE CFI VAPORLUME LED V2 V2WPB70L840-4-UNV TBK OR WBK ACESSORY & FKR-126
B	120/277V UNIVERSAL DRIVER	LED	13	---	STEM MOUNT	RED POLYCARBONATE LENS SUITABLE FOR WET LOCATIONS - 120V, SERIES 105 XBR	---
C	120/277V UNIVERSAL DRIVER WITH EMERGENCY BATTERY PACK WITH PHOTO CELL	LED	12	1500	WALL	POWDER COATED DIE-CAST ALUMINUM HOUSING, NATURAL ALUMINUM FINISH, -30°C TO 40°C OPERATING TEMPERATURE, 4000K COLOR TEMPERATURE, 70CRI, GASKETED LENS, IESNA TYPE III DISTRIBUTION, NEMA 4X RATED, WET LOCATION RATED, WITH EMERGENCY BATTERY PACK.	LITHONIA LIGHTING WST LED SERIES WST LED P1 40K VF MVOLT E20WC GARDCO LED WALL SCONCE 101L SERIES 101L-16L-530-NW-G1-3-EBPC-UNV-MGY
D	120/277V UNIVERSAL DRIVER WITH EMERGENCY BATTERY PACK	LED	62	-	POLE MOUNT	HIGH EFFICIENCY LED UNIT WITH PRISMATIC BOROSILICATE GLASS; UL LISTED FOR WET LOCATION	HUBBLE SERIES EML EMLC-50W-30D4 WITH PHOTO CELL OR EQUAL
E	120/277V UNIVERSAL DRIVER WITH EMERGENCY BATTERY PACK	LED	1.2	536	WALL 8-FT ABOVE FLOOR	LED STANDBY EMERGENCY LUMINAIRE, WHITE ENGINEERING GRADE THERMOPLASTIC HOUSING, 16°C TO 32°C OPERATING TEMPERATURE, IMPACT RESISTANT, CORROSION-PROOF, DAMP LOCATION RATED, EMERGENCY BATTERY PACK INCLUDED.	LITHONIA ELM6 LED SERIES LV-S-W1R-120/277-EL-N-UM-DL
F	MVOLT (120/277 UNIVERSAL DRIVER)	LED	30	-	STANCHION MOUNT	BODY MOUNTING MODULES AND GUARD-COPPER-FREE AL WITH CORRO-FREE EPOXY POWDER COAT. SUITABLE FOR CLASS I, DIVISION I HAZARDOUS LOCATIONS.	CROUSE-HINDS EV LED J4C701
X	120/277V UNIVERSAL DRIVER WITH EMERGENCY BATTERY PACK	LED	18.2	N/A	UNIVERSAL	EMERGENCY EXIT SIGN, CAST-ALUMINUM, NEMA-4X, CLEAR UV-STABLE POLYCARBONATE COVER, SINGLE WHITE POLYCARBONATE, FACEPLATE WITH DIRECTIONAL CHEVRON KNOCKOUTS. WHITE HOUSING, UNIVERSAL MOUNT, SEALED MAINTENANCE-FREE NICKEL CADMIUM BATTERY WITH 90 MINUTE CAPACITY.	LITHONIA LIGHTING LV EL N LED SERIES LV-S-W-2-R-120/277-EL N-UM-4X
TPA	N/A	N/A	N/A	N/A	BASE MOUNTED POLE	ROUND STRAIGHT ALUMINUM POLE, 4" DIAMETER WITH 2-3/8" TENON, 8' POLE WITH LOW PROFILE BASE COVER, HANDHOLE WITH RECESSED COVER. RATED FOR 150 MPH. MATCH TENON TO LUMINAIRE TYPE.	LITHONIA LIGHTING FLORIDA RATED POLE RSALP 8 4C T20 VD DNA
TPB	N/A	N/A	N/A	N/A	BASE MOUNTED POLE	ROUND STRAIGHT ALUMINUM POLE, 5" DIAMETER WITH 2-3/8" TENON, 16' POLE WITH LOW PROFILE BASE COVER, HANDHOLE WITH RECESSED COVER. RATED FOR 150 MPH. MATCH TENON TO LUMINAIRE TYPE.	LITHONIA LIGHTING FLORIDA RATED POLE RSALP 16 5C T20 VD DNA

NO.	DATE	REVISION	APP.

PAPE-DAWSON
2107 CITYWEST BLVD, 3RD FLR I HOUSTON, TX 77042 I 713.428.2400
TEXAS ENGINEERING FIRM #470 I TEXAS SURVEYING FIRM #10028800

GAI
Gupta & Associates, Inc.
CONSULTING ENGINEERING
Registration No. F-2593
302 Dennis St.
Houston, Texas 77006
Tel: 713-636-2936
Fax: 713-636-2987
email: hforouzan@gaiconsulting.com

SURVEYED BY:
PAPE-DAWSON ENGINEERS
FB NO. 24-018

THIS DOCUMENT IS RELEASED FOR INTERIM REVIEW UNDER THE AUTHORIZATION OF HOSS FOROUZAN, P.E. (#77748) AND IS **NOT TO BE USED FOR CONSTRUCTION.**

CITY OF HOUSTON
HOUSTON PUBLIC WORKS

LIFT STATION REHABILITATION AND RECONSTRUCTION
BEN'S BRANCH, WOODLAND RIDGE, ELMWOOD HILLS, FOREST SHORES, TRAIL RIVER, RIVERLAWN

ELECTRICAL

ELECTRICAL LIGHTING FIXTURE SCHEDULE

WBS NUMBER	FOR CITY OF HOUSTON USE ONLY
R-000267-0180-3	
DRAWING SCALE	
AS NOTED	
CITY OF HOUSTON PM	
BRENDA JOHNSON P.E.	
SHEET NO. XX OF XX	

GE-03

FILE PATH: O:\H8107_Lift Station Rehabilitation And Reconstruction (Pape Dawson)\6 Drawings\Electrical\Working\H8107_GE-03.dwg

ELECTRICAL GENERAL NOTES

1. THE NOTES CONTAINED ON THIS SHEET ARE PROVIDED FOR THE CONVENIENCE OF THE CONTRACTOR WHEN WORKING IN THE FIELD, AND CONTAIN EXCERPTS FROM THE SPECIFICATION SECTIONS. HOWEVER THE CONTRACTOR IS HEREBY ADVISED THAT THE CONTRACT DOCUMENTS CONSIST OF BOTH THE DRAWINGS AND THE SPECIFICATIONS, AND THAT THE CONTRACTOR MUST COMPLY FULLY WITH BOTH THE BOUND DRAWINGS AND THE BOUND SPECIFICATIONS.

2. ALL EQUIPMENT WIRING, RACEWAYS, ETC. SHALL BE INSTALLED AND GROUNDED IN ACCORDANCE WITH THE LATEST EDITION OF THE NATIONAL ELECTRICAL CODE, LOCAL CODES, AND INDUSTRY STANDARDS (IE. UL, NEMA, IEEE, ANSI, ETC.) THE DRAWING NOTES AND DETAILS SHALL BE COMPLIED WITH IN ADDITION TO THE REQUIREMENTS IN THE SPECIFICATIONS. REFER TO EACH SPECIFICATION SECTION FOR SPECIFIC REQUIREMENTS.

3. ALL RACEWAY INSTALLATIONS SHALL BE INSTALLED IN A MANNER TO PREVENT CONFLICTS WITH EQUIPMENT AND STRUCTURAL CONDITIONS. ALL EXPOSED RACEWAY SHALL BE INSTALLED PARALLEL TO BEAMS, CEILINGS, FLOORS AND WALLS. SEE SPECIFICATION ON RACEWAYS FOR ADDITIONAL REQUIREMENTS.

4. CONDUITS SHALL BE TERMINATED IN A NEAT MANNER AND STRICTLY IN ACCORDANCE WITH THE SPECIFICATIONS AND DRAWING DETAILS.

5. CONDUITS TERMINATED INTO ENCLOSURES SHALL BE PERPENDICULAR TO THE WALLS OF THE ENCLOSURE. THE USE OF SHORT SEALTIGHT ELBOW FITTINGS FOR SUCH TERMINATIONS IS NOT PERMITTED.

6. ALL RACEWAY INSTALLATIONS, CROSSING EXPANSION JOINTS OR TRANSITIONS FROM BELOW GRADE TO EXPOSED ABOVE GRADE, SHALL HAVE EXPANSION OR EXPANSION/DEFLECTION TYPE FITTINGS AS SPECIFIED FOR THE APPLICATION. SEE THE DRAWINGS AND THE SPECIFICATION ON RACEWAYS FOR THE EXACT TYPE OF FITTING TO BE USED.

7. NO CONDUIT SMALLER THAN 3/4", NOR WIRE SMALLER THAN NO. 12 AWG, SHALL BE USED UNLESS SPECIFICALLY NOTED.

8. ALL UNDERGROUND SINGLE CONDUITS AND DUCTBANKS OF MULTIPLE CONDUITS SHALL BE RIGID PVC CONDUIT ENCASED IN REINFORCED RED CONCRETE. CONCRETE DYED RED BEFORE PLACEMENT. MINIMUM SIZE IS 2 INCH. FIELD VERIFY THE ROUTING OF ALL EXISTING UNDERGROUND CONDUIT AND DUCTBANKS. COORDINATE ROUTING OF NEW CONDUIT AND DUCTBANKS TO AVOID INTERFERENCE WITH EXISTING CONDUIT, DUCTBANKS, AND OTHER UNDERGROUND UTILITIES.

9. ALL CHANGES OF DIRECTION GREATER THAN 20 DEGREES IN UNDERGROUND SINGLE, OR DUCTBANKS OF MULTIPLE CONDUITS, SHALL BE ACCOMPLISHED USING PVC COATED RIGID ALUMINUM LONG RADIUS BENDS. BENDS OF PVC CONDUIT GREATER THAN 20 DEGREES, OR THE USE OF FLEXIBLE CONDUIT OF ANY TYPE, WILL NOT BE PERMITTED. SEE THE SPECIFICATIONS FOR MORE REQUIREMENTS.

10. LIQUID TIGHT FLEXIBLE ALUMINUM CONDUIT SHALL BE USED FOR THE PRIMARY AND SECONDARY OF TRANSFORMERS, GENERATOR TERMINATIONS AND OTHER EQUIPMENT WHERE VIBRATION IS PRESENT. USE IN OTHER LOCATIONS IS NOT PERMITTED, EXCEPT FOR CONNECTIONS TO INSTRUMENTATION TRANSMITTERS, WHERE MULTIPLE PENETRATIONS ARE REQUIRED. LIQUID TIGHT FLEXIBLE ALUMINUM CONDUIT SHALL HAVE A MAXIMUM LENGTH NOT GREATER THAN THAT OF A FACTORY MANUFACTURED LONG RADIUS ELBOW OF THE CONDUIT SIZE BEING USED. THE MAXIMUM BENDING RADIUS SHALL NOT BE LESS THAN THAT SHOWN IN THE NEC CHAPTER 9, TABLE 2, "OTHER BENDS". BX OR AC TYPE PREFABRICATED CABLES WILL NOT BE PERMITTED.

11. THE WIRING DIAGRAMS, BLOCK DIAGRAMS, QUANTITY/SIZES OF WIRES/CONDUITS REPRESENT A SUGGESTED ARRANGEMENT BASED UPON SELECTED STANDARD COMPONENTS OF ELECTRICAL EQUIPMENT. MODIFICATIONS ACCEPTABLE TO THE ENGINEER MAY BE MADE BY THE CONTRACTOR TO ACCOMMODATE EQUIPMENT ACTUALLY APPROVED. ALL MODIFICATIONS SHALL BE SUBMITTED TO THE ENGINEER FOR APPROVAL. THE BASIC SEQUENCE AND METHOD OF CONTROL MUST BE MAINTAINED AS INDICATED ON THE DRAWINGS AND/OR SPECIFIED.

12. ALL JUNCTION BOXES, PULL BOXES AND TERMINATION BOXES IN NEMA 12 AREAS SHALL BE ALUMINUM. FOR NEMA 4X AREAS SEE SPECIFICATIONS FOR BOX DETAILS AND SPECIFICATIONS.

13. SEAL ALL RACEWAYS ENTERING JUNCTION BOXES OR CONTROL PANELS CONTAINING ELECTRICAL OR INSTRUMENTATION EQUIPMENT WITH WATERTIGHT SEALANT. REFER TO THE SPECIFICATIONS FOR DETAILS.

14. ALL EQUIPMENT AND ELECTRICAL EQUIPMENT ENCLOSURE LOCATIONS, OR TERMINAL BOX LOCATIONS, ARE APPROXIMATE. THE EXACT LOCATIONS SHALL BE COORDINATED WITH AND APPROVED BY THE OWNER/ENGINEER, DURING CONSTRUCTION, AT NO ADDITIONAL COST TO THE OWNER.

15. ALL EQUIPMENT AND ELECTRICAL EQUIPMENT ENCLOSURES DIMENSIONS ARE APPROXIMATE. ALL EQUIPMENT AND ELECTRICAL EQUIPMENT ENCLOSURES OR TERMINAL BOX DIMENSIONS SHALL BE VERIFIED WITH THE EQUIPMENT SUPPLIER. ALLOW FOR LOCATION CHANGES AND INCLUDE IN THE CONTRACT PRICE. THE EXACT LOCATIONS OF ALL ELECTRICAL EQUIPMENT AND ROUTING OF ALL CABLES AND CONDUITS SHALL BE COORDINATED WITH AND APPROVED BY THE OWNER/ENGINEER DURING CONSTRUCTION.

16. CORING OF AN EXISTING STRUCTURE SHALL BE COORDINATED WITH AND APPROVED BY THE OWNER/ENGINEER. CORING THROUGH STRUCTURAL BEAMS IS STRICTLY PROHIBITED WITHOUT PRIOR WRITTEN APPROVAL FROM THE OWNER/ENGINEER.

17. THE LOCATION OF ALL ELECTRICAL EQUIPMENT AND ROUTING OF CABLES AND CONDUITS SHALL BE COORDINATED AND APPROVED BY THE OWNER.

18. THE DUCTBANK ROUTING AS SHOWN ON THE DRAWING IS APPROXIMATE. FIELD VERIFY THE EXACT DUCTBANK ROUTING, CABLE LENGTH AND CONDUIT LENGTH.

19. PROVIDE CONDUIT SEALS FOR CONDUIT PENETRATIONS AS PER NEC AND NFPA820.

20. COORDINATE ALL WORK WITH THE OWNER.

21. LOCATE ALL UNDERGROUND UTILITIES BEFORE DIGGING. COORDINATE THE EFFORT WITH THE OWNER.

22. ALL SLOTTED CHANNEL, SLOTTED CHANNEL SUPPORT MATERIAL, WASHERS, SCREWS, NUTS, CONDUIT CLAMPS, ALL THREAD SPRING NUTS AND MISC. MOUNTING HARDWARE SHALL BE 316 STAINLESS STEEL.

23. LIGHTING FIXTURES SHALL BE MOUNTED ACCORDING TO THE MOUNTING HEIGHT GIVEN ON THE DRAWINGS. THE MOUNTING HEIGHT SHALL BE MEASURED FROM THE BOTTOM OF THE LIGHTING FIXTURE TO THE FINISHED FLOOR.

24. CONDUIT AND WIRE FOR THE HVAC EQUIPMENT AND MISCELLANEOUS DEVICES SHALL BE:

    A. 3/4" (MIN) RIGID ALUMINUM.

    B. NO.14 XHHW CU. WIRE XHHW (MIN.).

    C. IN ACCORDANCE WITH ALL ELECTRICAL AND HVAC SPECIFICATIONS REQUIREMENTS.

25. CONDUITS AND WIRES SHOWN ON THE INTERFACE DIAGRAM SHALL BE INSTALLED BY THE CONTRACTOR. GROUPING OF CONDUIT AND WIRE MAY BE CHANGED, IF APPROVED BY THE ENGINEER AND OWNER.

26. ALL CONDULETS SHALL BE FORM 7 AND SHALL HAVE 316 SS CLAMP COVERS WITH 316 SS CLAMPS AND SCREWS. SCREW DOWN COVERS ARE UNACCEPTABLE. REFER TO THE SPECIFICATIONS FOR MORE INFORMATION.

27. ALL UNDERGROUND GROUNDING CONDUCTORS SHALL BE BARE TIN-PLATED COPPER, ALL GROUND RODS SHALL BE 3/4" BY 10' LONG. ALL EXPOSED COPPER GROUND CABLES SHALL BE GREEN INSULATED CONDUCTORS. PROVIDE XHHW INSULATION.

28. WHERE NOTES ON THE DRAWING INDICATE THAT THE CONTRACTOR SHALL FIELD-VERIFY, THE INTENT IS FOR THE CONTRACTOR TO INVESTIGATE TO THE EXTENT NECESSARY TO PROVIDE THE WORK AND MATERIALS PRIOR TO BIDDING AND INCLUDE ALL COSTS IN THE BID PRICE. THE CONTRACT PRICE SHALL NOT BE INCREASED WHEN THE CONTRACTOR HAS NOT INVESTIGATED PER THE NOTES DIRECTING THAT BE DONE.

29. REFER TO SPECIFICATION SECTION 16110 RACEWAYS BOXES ENCLOSURES AND FITTINGS FOR INSTALLATION REQUIREMENTS.

TYPICAL ENCLOSURE TYPES BY AREA

	BOXES & ENCLOSURES					
NON-HAZARDOUS AREAS	1	3R	4X	4X*	12	
OUTDOOR; GENERAL AREAS		X	X			
OUTDOOR; CHEMICAL AREAS				X		
INDOOR; CHEMICAL ROOM				X		
INDOOR; CONDITIONED SPACE					X	
INDOOR; NON-CONDITIONED SHOP SPACE					X	
INDOOR; NON-CONDITIONED PROCESS AREA			X			
INDOOR, ADMIN BUILDING	X					
CLASS I, DIVISION 1	REFER TO NEC, NFPA-820, AND CONTRACT CONSTRUCTION SPECIFICATIONS					
CLASS I, DIVISION 2	REFER TO NEC, NFPA-820, AND CONTRACT CONSTRUCTION SPECIFICATIONS					

GENERAL NOTES:

- EQUIPMENT SUCH AS MOTOR CONTROL CENTER, SWITCHGEAR, VFDS, AND OTHER STAND-ALONE MOTOR STARTERS ARE TO BE SPECIFIED UNIQUELY.
- NEMA 1 ENCLOSURES ARE TO BE NEMA 1 GASKETED.
- NEMA 4X* ENCLOSURES ARE TO BE NON-METALLIC (ie PVC) NEMA 4X
- OUTDOOR GENERAL AREAS COULD BE 3R OR 4X DEPENDING ON OWNER PREFERENCE AND WHETHER WTP OR WWTP - REFER TO DRAWINGS.

CONDUIT TYPE	LOCATION
RIGID GALVANIZED CONDUIT	NOT ACCEPTABLE FOR USE ON THIS PROJECT EXCEPT FOR THE UTILITY COMPANY'S CONDUCTORS. ALL UTILITY COMPANY'S DUCTS SHALL BE AS SPECIFIED BY UTILITY COMPANY.
PVC COATED ALUMINUM CONDUIT	ALL EMBEDDED CONDUIT BENDS, UNDERGROUND DUCTBANK OF MORE THAN 20 DEGREES, AND ALL CONDUIT STUB-UPS TO A MINIMUM OF 6" ABOVE FINISHED FLOOR OR GRADE AND IN CHLORINE AND CAUSTIC ROOMS.
LIQUID TIGHT FLEXIBLE ALUMINUM CONDUIT	RACEWAY CONNECTION TO VIBRATING EQUIPMENT ONLY, IN ALL AREAS.
RIGID NON-METALLIC, SCHEDULE 40 PVC CONDUIT	UNDERGROUND ENCASED IN RED DYE REINFORCED CONCRETE. (AS WHERE SPECIFIED)
RIGID NON-METALLIC, SCHEDULE 80 PVC CONDUIT	FOR USE IN CHLORINE AND CAUSTIC ROOMS, AND UNDERGROUND. ENCASED IN RED DYED REINFORCED CONCRETE. (AS WHERE SPECIFIED)
FLEXIBLE ALUMINUM CONDUIT	FIXTURE WHIP CONNECTION TO LIGHTING FIXTURES IN NEMA 12 AREAS (MAXIMUM 3-FT). BX OR AC TYPE PREFABRICATED CABLES ARE NOT PERMITTED.
ALUMINUM RIGID METAL CONDUIT	ALL ABOVE GRADE AREAS, EXCEPT FOR CONCRETE EMBEDDED AND THOSE AREAS ALREADY DESCRIBED IN THIS TABLE
ELECTRIC METALLIC TUBING (EMT) CONDUIT	FOR USE ONLY ON CONCEALED, ABOVE GROUND, INTERIOR ELECTRICAL WIRING IN AIR-CONDITIONED BUILDINGS.

*REFER TO DESIGN GUIDE LINE SPECIFICATIONS.

DEMOLITION NOTES

1. COORDINATE THE DEMOLITION OF ELECTRICAL CONDUIT, WIRE, EQUIPMENT AND DEVICES WITH THE GENERAL DEMOLITION AND SCHEDULE. THE DRAWINGS ARE INTENDED TO CONVEY THE GENERAL NATURE AND SCOPE OF THE DEMOLITION WORK. EVERY ITEM TO BE DEMOLISHED MAY NOT BE SHOWN. FIELD VERIFY, AND INCLUDE ALL DEMOLITION WORK IN THE CONTRACT PRICE.

2. PROVIDE TEMPORARY WIRE AND CONDUIT FOR THE EQUIPMENT WHICH MAY BE AFFECTED BY THE DEMOLITION BUT TO REMAIN IN SERVICE.

3. RELOCATE AND RECONNECT POWER AND CONTROL RACEWAYS AND CONDUCTORS TO EQUIPMENT AFFECTED BY DEMOLITION WORK.

4. ALL CONDUCTORS BEING DEMOLISHED SHALL BE DISCONNECTED AND REMOVED FROM THE LOAD TO THE SOURCE. SURFACE MOUNTED CONDUITS AND MOUNTING HARDWARE SHALL BE REMOVED. UNDERGROUND CONDUITS WHICH ARE NOT BEING REMOVED OR OTHERWISE NOT BEING MADE UNUSABLE SHALL BE CAPPED AND TAGGED AS SPARE, WITH INFORMATION CLEARLY INDICATING THE LOCATION OF THE OTHER END.

5. ALL SURFACES WHERE DEMOLISHED EQUIPMENT OR CONDUIT IS REMOVED SHALL BE CLEANED, PATCHED AND PAINTED TO MATCH THE SURROUNDING SURFACE.

6. CHECK THE FUNCTION OF EACH CONDUCTOR BEFORE REMOVING OR DISCONNECTING.

7. IF A CONDUCTOR WHICH HAS TO STAY IN SERVICE (NOT BEING DEMOLISHED) IS INSTALLED IN A COMMON CONDUIT WITH CONDUCTORS WHICH ARE BEING DEMOLISHED, THE CONTRACTOR SHALL REMOVE ALL CONDUCTORS FROM THE CONDUIT, PROVIDE NEW CONDUCTORS WHICH ARE REPLACEMENTS FOR THE CONDUCTORS THAT ARE TO REMAIN IN SERVICE AND RE-INSTALL THE NEW CONDUCTORS. AFTER THE CONDUCTORS ARE PULLED, MEGGER OR VFL TEST EACH CONDUCTOR. CONNECT BOTH ENDS OF THE NEW CONDUCTORS AND TEST THE SYSTEM FOR PROPER FUNCTION. DO NOT RE-PULL USED CONDUCTORS UNLESS SPECIFIED.

8. WHERE EQUIPMENT IS BEING RE-FED FROM A NEW SOURCE, EXISTING CONDUIT MAY BE REUSED ONLY IF THE CONDUIT AND FITTINGS ARE OF THE TYPE SPECIFIED FOR NEW WORK ON THIS CONTRACT. IF NOT, THE CONDUIT AND CONDUCTORS SHALL BE REPLACED WITH NEW MATERIAL MEETING THE SPECIFICATIONS, AT NO ADDITIONAL COST TO THE OWNER.

9. THE CONTRACTOR SHALL COORDINATE WITH THE OWNER/ENGINEER TO FLAG EXISTING UNDERGROUND CONDUITS BEFORE DIGGING.

10. THE OWNER HAS THE RIGHT OF FIRST REFUSAL TO THE EQUIPMENT BEING REMOVED. THE CONTRACTOR SHALL DELIVER THE EQUIPMENT WHICH THE OWNER WISHES TO KEEP AT A LOCATION DESIGNATED BY THE OWNER. SEE SPECIFICATIONS.

11. DO NOT MAKE ANY MODIFICATIONS TO THE EXISTING ELECTRICAL EQUIPMENT UNTIL THE FOLLOWING HAS BEEN DONE:

    A. THE OWNER/CONTRACTOR SHALL WITNESS AND RECORD THE CONDITION OF THE EXISTING EQUIPMENT, THE CONTRACTOR SHALL NOTE DOWN ANY DEFECTS OR DEFICIENCIES.

    B. THE OWNER SHALL OPERATE THE EQUIPMENT TO DEMONSTRATE THE CURRENT CONDITIONS. THE CONTRACTOR SHALL NOTE DOWN ANY DEFECTS OR DEFICIENCIES.

    C. A WRITTEN AND PHOTOGRAPHIC RECORD OF THE OPERATION AND EXISTING CONDITION SHALL BE KEPT IN A THREE RING BINDER AT THE OWNER/CONTRACTOR TRAILER, IN FORM OF PICTURES AND INFORMATION.

    D. A FORM SHALL BE GENERATED BY THE CONTRACTOR TO RECORD THE OBSERVATIONS. BOTH PARTIES SHALL SIGN ON THE FORM.

    E. REPLACE ALL MATERIAL OR EQUIPMENT DAMAGED DURING THE COURSE OF WORK.

    F. AFTER THE CHANGES ARE MADE, THE EQUIPMENT SHALL BE INSPECTED AND RE-TESTED TO DEMONSTRATE THAT IT FUNCTIONS CORRECTLY.

    G. NO PORTION OF EXISTING CONDUCTORS SHALL BE SPLICED TO NEW CONDUCTORS FOR RE-USE WITHOUT SPECIFIC APPROVAL FROM THE OWNER/ENGINEER ON A CASE-BY-CASE BASIS.

MCC, CONTROL PANELS, PANELBOARDS

THESE NOTES APPLY TO CONTROL PANELS, MCC ETC WHICH HAS TO BE REFURBISHED, MODIFIED, DISCONNECTED & RECONNECTED OR REWORKED. SEE SPECIFICATION SECTION 16060 ELECTRICAL DEMOLITION:

THE CONTRACTOR SHALL NOT MAKE ANY MODIFICATION UNTIL THE FOLLOWING HAS BEEN DONE:

A. THE OWNER/CONTRACTOR SHALL WITNESS THE CONDITION OF THE EXISTING EQUIPMENT, THE CONTRACTOR SHALL NOTE DOWN ANY DEFECTS OR DEFICIENCY.

B. THE OWNER SHALL OPERATE THE EQUIPMENT TO DEMONSTRATE THE CURRENT CONDITIONS. THE CONTRACTOR SHALL NOTE DOWN ANY DEFECTS OR DEFICIENCIES.

C. A RECORD OF THE OPERATION AND EXISTING CONDITION SHALL BE KEPT IN A THREE RING BINDER AT THE OWNER/CONTRACTOR TRAILER, IN FORM OF PICTURES AND INFORMATION.

D. A FORM SHALL BE GENERATED BY THE CONTRACTOR TO RECORD THE OBSERVATIONS. BOTH PARTIES SHALL SIGN ON THE FORM.

E. REPLACE ALL MATERIAL OR EQUIPMENT DAMAGED DURING THE COURSE OF WORK.

F. AFTER THE CHANGES ARE MADE, THE EQUIPMENT SHALL BE INSPECTED AND RE-TESTED TO DEMONSTRATE THAT IT FUNCTIONS CORRECTLY.

NO.	DATE	REVISION	APP.

PAPE-DAWSON
2107 CITYWEST BLVD, 3RD FLR I HOUSTON, TX 77042 I 713.428.2400
TEXAS ENGINEERING FIRM #470 I TEXAS SURVEYING FIRM #10028800

GAI
Gupta & Associates, Inc.
CONSULTING ENGINEERING
Registration No. F-2593
302 Dennis St.
Houston, Texas 77006
Tel: 713-636-2936
Fax: 713-636-2987
email: hforouzan@gaiconsulting.com

SURVEYED BY:
PAPE-DAWSON ENGINEERS
FB NO. 24-018

THIS DOCUMENT IS RELEASED FOR INTERIM REVIEW UNDER THE AUTHORIZATION OF HOSS FOROUZAN, P.E. (#77746) AND IS **NOT TO BE USED FOR CONSTRUCTION.**

CITY OF HOUSTON
HOUSTON PUBLIC WORKS

LIFT STATION REHABILITATION AND RECONSTRUCTION
BEN'S BRANCH, WOODLAND RIDGE, ELMWOOD HILLS, FOREST SHORES, TRAIL RIVER, RIVERLAWN

ELECTRICAL

ELECTRICAL GENERAL NOTES

WBS NUMBER	FOR CITY OF HOUSTON USE ONLY
R-000267-0180-3	
DRAWING SCALE	
AS NOTED	
CITY OF HOUSTON PM	
BRENDA JOHNSON P.E.	
SHEET NO. XX OF XX	

GE-04

FILE PATH: O:\H8107_Lift Station Rehabilitation And Reconstruction (Pape Dawson)\6 Drawings\Electrical\Working\H8107_GE-04.dwg

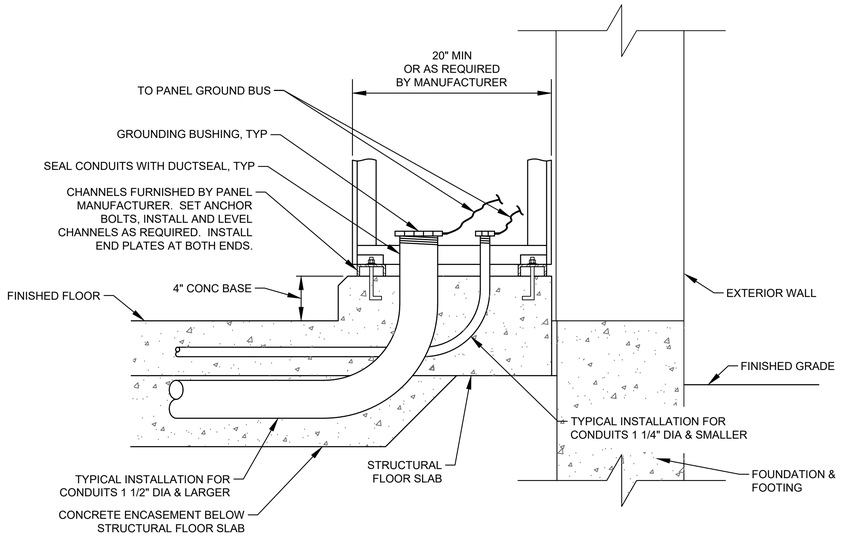

TYPICAL MCC & CONTROL PANEL INSTALLATION & CONDUIT ENTRY

DETAIL 14
NTS -

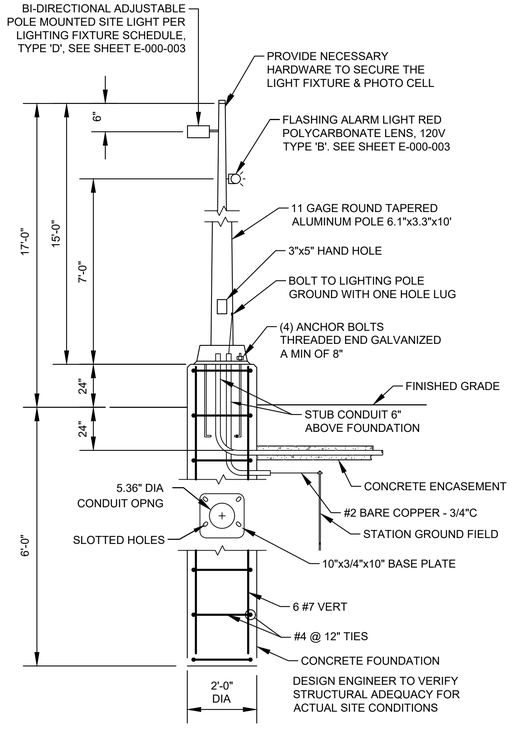

TYPICAL YARD LIGHT

DETAIL 13
NTS -

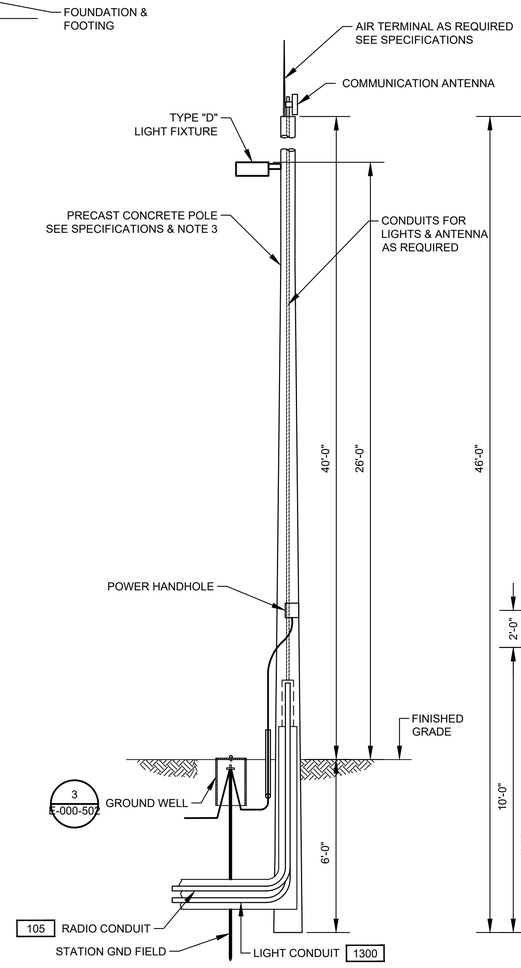

COMMUNICATION POLE MOUNTING DETAIL

DETAIL 15
NTS -

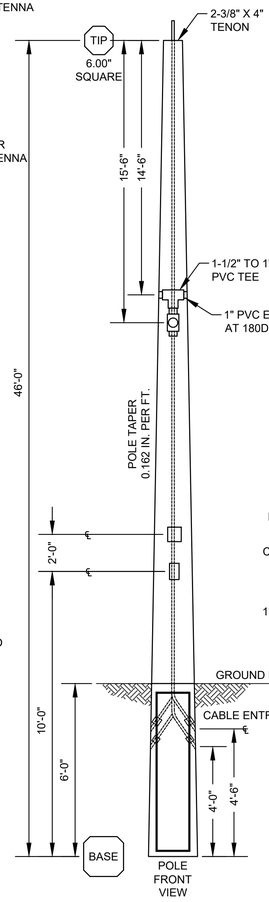

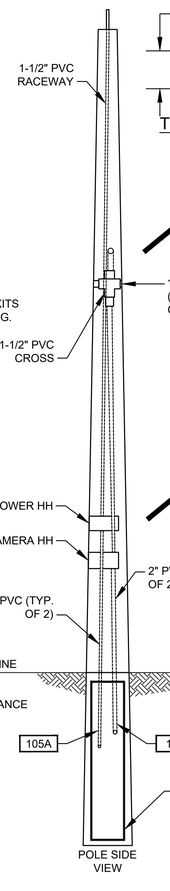

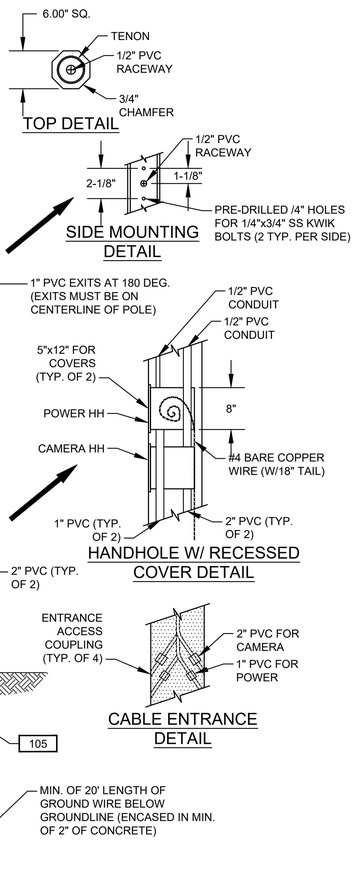

NOTES:

1. ON GROUND WIRE TERMINATION'S, ALL PAINTED OR COATED METAL SURFACES SHALL BE REMOVED AND CLEANED TO BARE METAL. TO OBTAIN A SOUND GROUND CONNECTION. ONCE INSTALLED APPLY PROTECTIVE COATING ON BARE METAL AREAS PER MANUFACTURER REQUIREMENTS.
2. PRECAST CONCRETE POLE TO MOUNT THE RADIO RECEIVER.
3. 1" CONDUIT TO EXTEND TO THE TOP OF POLE FOR ETHERNET CABLE FOR RADIO.

NO.	DATE	REVISION	APP.

PAPE–DAWSON
2107 CITYWEST BLVD, 3RD FLR I HOUSTON, TX 77042 I 713.428.2400
TEXAS ENGINEERING FIRM #470 I TEXAS SURVEYING FIRM #10028800

GAI
Gupta & Associates, Inc.
CONSULTING ENGINEERING
Registration No. F-2593
302 Dennis St.
Houston, Texas 77006
Tel: 713-636-2936
Fax: 713-636-2987
email: hforouzan@guiconsulting.com

THIS DOCUMENT IS RELEASED FOR INTERIM REVIEW UNDER THE AUTHORIZATION OF HOSS FOROUZAN, P.E. (#77748) AND IS **NOT TO BE USED FOR CONSTRUCTION.**

SURVEYED BY:
PAPE–DAWSON ENGINEERS
FB NO. 24–018

CITY OF HOUSTON
HOUSTON PUBLIC WORKS

LIFT STATION REHABILITATION AND RECONSTRUCTION
BEN'S BRANCH, WOODLAND RIDGE, ELMWOOD HILLS, FOREST SHORES, TRAIL RIVER, RIVERLAWN

ELECTRICAL
GENERAL
ELECTRICAL YARD LIGHT/COMM. POLE DETAILS

WBS NUMBER	FOR CITY OF HOUSTON USE ONLY
R–000267–0180–3	
DRAWING SCALE	
AS NOTED	
CITY OF HOUSTON PM	
BRENDA JOHNSON P.E.	
SHEET NO. XX OF XX	

GE–05

FILE PATH: O:\H8107_Lift Station Rehabilitation And Reconstruction (Pape Dawson)\6 Drawings\Electrical\Working\H8107_GE–05.dwg

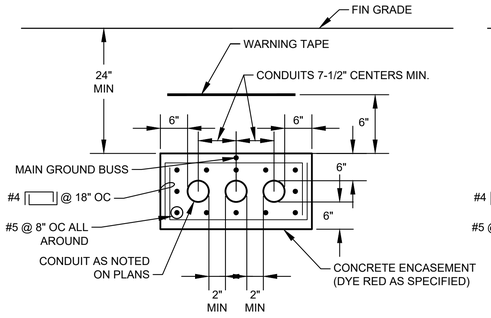

TYP MULTI-CONDUIT DUCTBANK SECTION

NOTE: TIE MAIN GROUNDING BUS TO REBAR AT A MAXIMUM INTERVAL OF EVERY 20 FEET.

DETAIL 1 / NTS

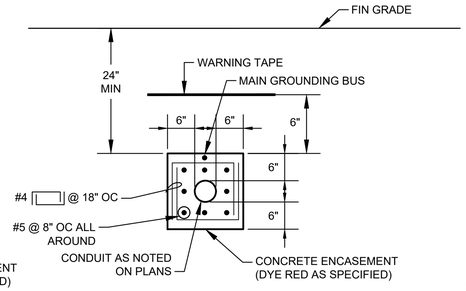

TYP SINGLE-CONDUIT DUCTBANK SECTION

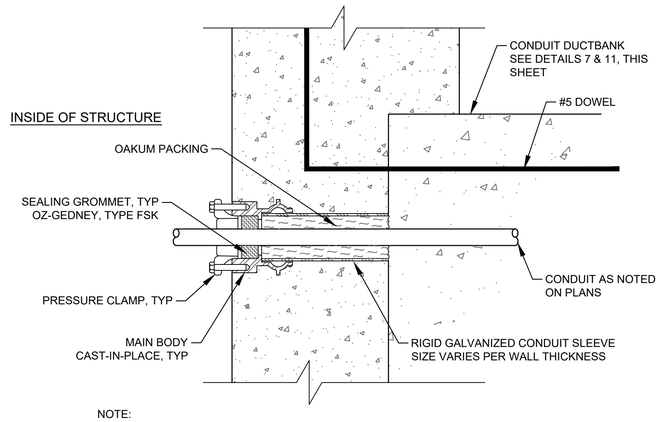

NOTE:

WALL SEAL SHOWN IS TYPICAL FOR EACH CONDUIT IN DUCTBANK.

SINGLE ENDED TYPE

FOR USE WHERE CONDUIT OUTSIDE THE STRUCTURE IS ENCASED IN CONCRETE

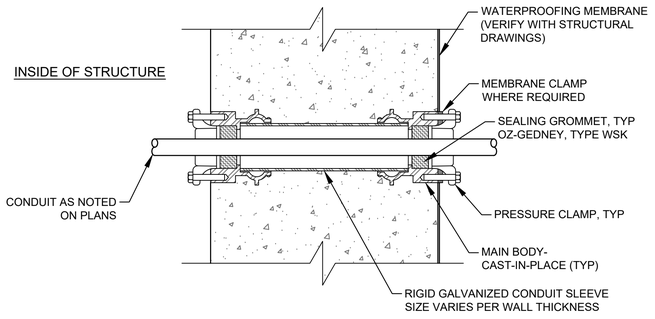

DOUBLE ENDED TYPE WITH MEMBRANE

FOR USE WHERE CONDUIT OUTSIDE THE STRUCTURE IS ENCASED IN CONCRETE

TYPICAL CONDUIT SEALS

DETAIL 4 / NTS

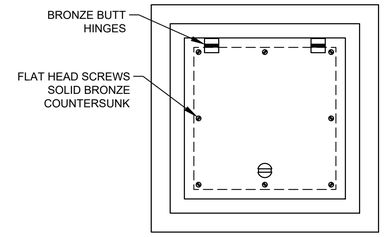

TOP PLAN

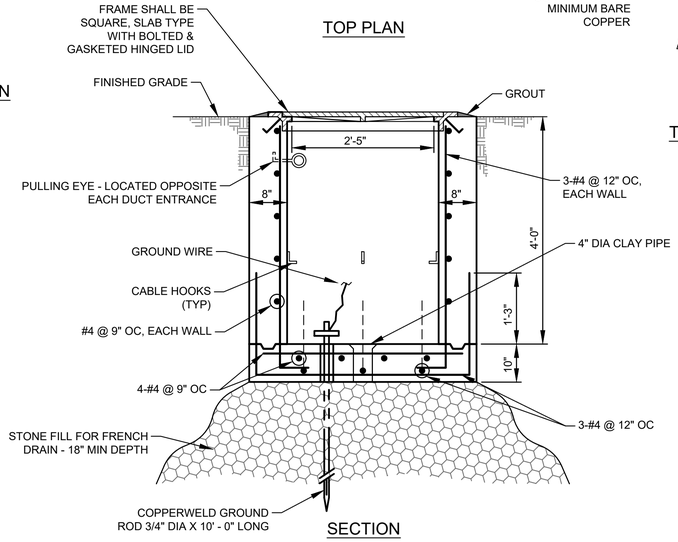

SECTION

TYPICAL ELECTRICAL HANDHOLE CONSTRUCTION

DETAIL 2 / NTS

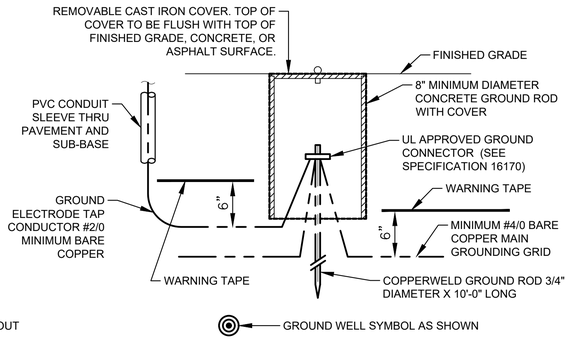

TYPICAL GROUND ROD AND WELL INSTALLATION

DETAIL 3 / NTS

GROUND CONNECTOR SCHEDULE	
WIRE SIZE	BURNDY
#2 AWG	GAR 6426
#2/0 AWG	GAR 6426
#4/0 AWG	GAR 6429
500 kcmil	GAR 6434

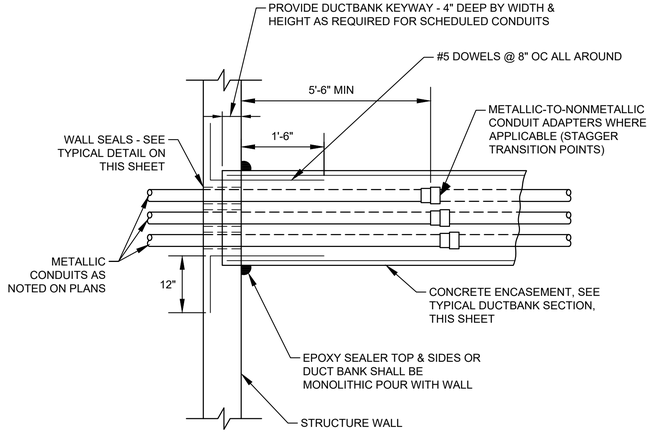

PLAN

TYPICAL DUCTBANK ENTRANCE AT STRUCTURE WALL

DETAIL 5 / NTS

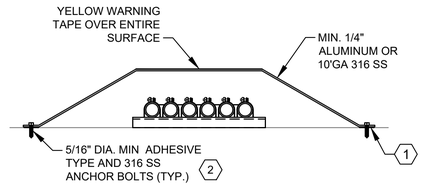

CONDUIT COVER

DETAIL 6 / NOT TO SCALE

NOTES BY SYMBOL "#":

1. PROVIDE 1/8" NEOPRENE GASKET WHERE ALUMINUM IS SELECTED. DO NOT ALLOW ALUMINUM TO COME INTO DIRECT CONTACT WITH CONCRETE.
2. PROVIDE THE CORRECT SIZE ANCHOR BOLTS BASED ON LOAD.

NO.	DATE	REVISION	APP.

PAPE–DAWSON
2107 CITYWEST BLVD, 3RD FLR I HOUSTON, TX 77042 I 713.428.2400
TEXAS ENGINEERING FIRM #470 I TEXAS SURVEYING FIRM #10028800

GAI
Gupta & Associates, Inc.
CONSULTING ENGINEERING
Registration No. F-2593
302 Dennis St.
Houston, Texas 77006
Tel: 713-636-2936
Fax: 713-636-2987
email: hforouzan@guiconsulting.com

SURVEYED BY:
PAPE–DAWSON ENGINEERS
FB NO. 24–018

THIS DOCUMENT IS RELEASED FOR INTERIM REVIEW UNDER THE AUTHORIZATION OF HOSS FOROUZAN, P.E. (#77748) AND IS **NOT TO BE USED FOR CONSTRUCTION.**

CITY OF HOUSTON
HOUSTON PUBLIC WORKS

LIFT STATION REHABILITATION AND RECONSTRUCTION
BEN'S BRANCH, WOODLAND RIDGE, ELMWOOD HILLS, FOREST SHORES, TRAIL RIVER, RIVERLAWN

ELECTRICAL

GENERAL TYPICAL ELECTRICAL DETAILS

WBS NUMBER	FOR CITY OF HOUSTON USE ONLY
R–000267–0180–3	
DRAWING SCALE	
AS NOTED	
CITY OF HOUSTON PM	
BRENDA JOHNSON P.E.	
SHEET NO. XX OF XX	

GE–06

FILE PATH: O:\H8107_Lift Station Rehabilitation And Reconstruction (Pape Dawson)\6 Drawings\Electrical\Working\H8107_GE–06.dwg

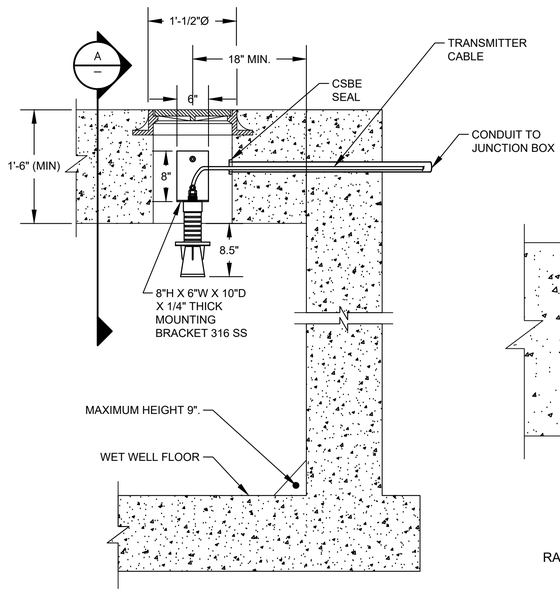

RADAR LEVEL TRANSMITTER MOUNTING
(TYP. LT-1, LT-2)

DETAIL 1
NTS
(SEE NOTE 1, 2, 4 & 5)

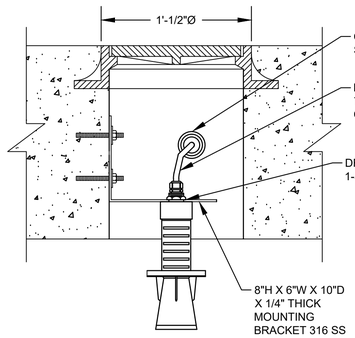

RADAR LEVEL TRANSMITTER MOUNTING
TYP. LT-1 & LT-2

SECTION 2
NTS
(SEE NOTE 1, 2, 4 & 5)

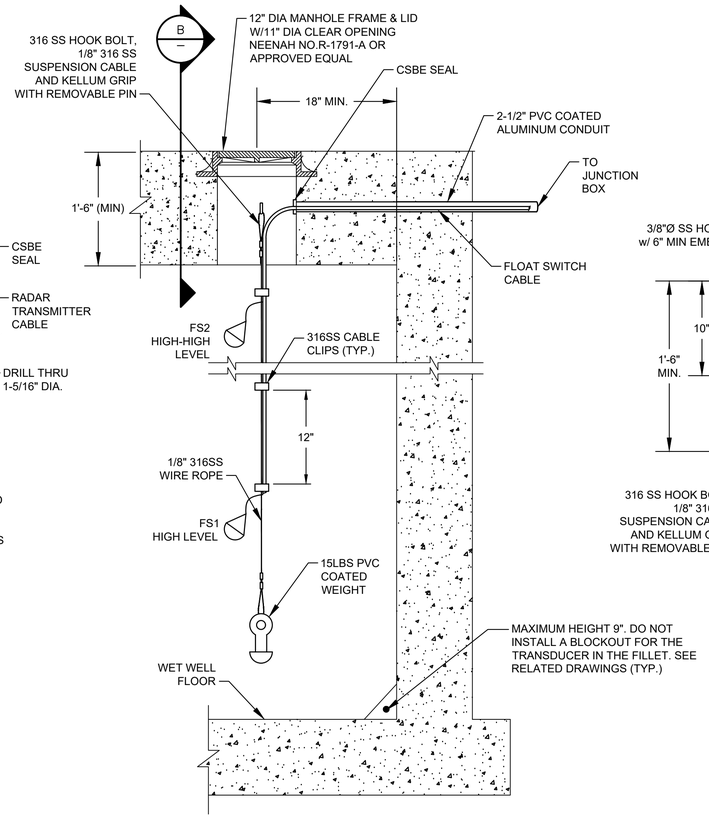

FLOAT SWITCH MOUNTING

DETAIL 3
NTS
(SEE NOTES 3, 4 & 5)

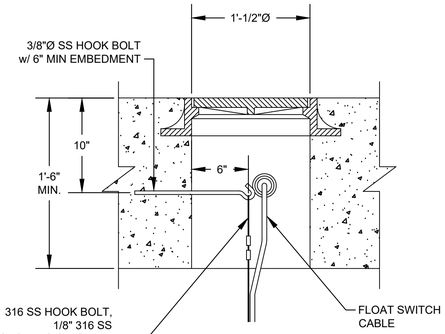

4
FLOAT SWITCH MOUNTING

SECTION 4
NTS
(SEE NOTES 3, 4 & 5)

NOTES:

1. NEW RADAR LEVEL TRANSMITTERS FOR LT-1, LT-2.
2. NEW MANHOLES FOR RADAR LEVEL TRANSMITTERS LT-1, LT-2.
3. NEW MANHOLE FOR FLOAT SWITCHES.
4. PAINT MANHOLE LIDS AND HATCHES HUNTER GREEN.
5. NEW MANHOLE INSTALLATION.
6. RETROFIT MANHOLE INSTALLATION.
7. INSIDE WET WELL IS CLASSIFIED AS CLASS I, DIVISION 1. OUTSIDE WET WELL WITHIN 5 FEET OF WET WELL OPENINGS ARE CLASSIFIED AS CLASS I, DIVISION 2.

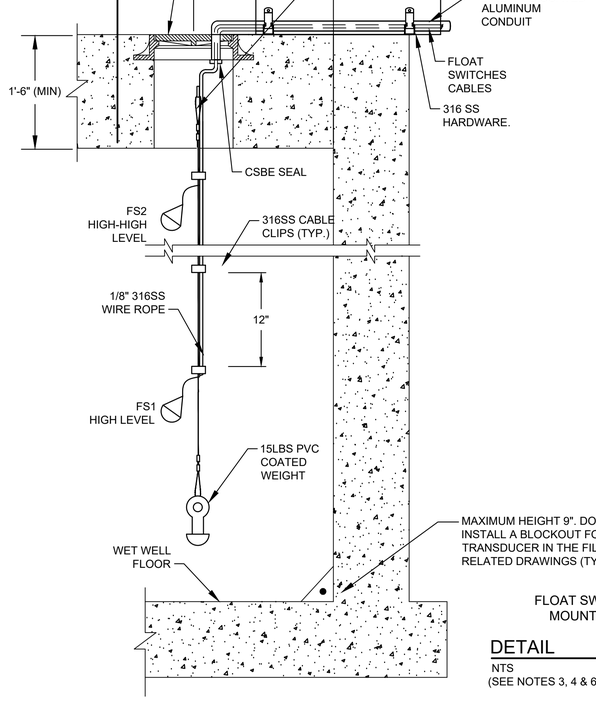

FLOAT SWITCH MOUNTING

DETAIL 5
NTS
(SEE NOTES 3, 4 & 6)

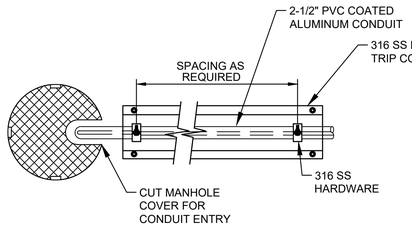

FLOAT SWITCH MOUNTING
TOP VIEW

DETAIL 6
NTS
(SEE NOTES 3, 4 & 6)

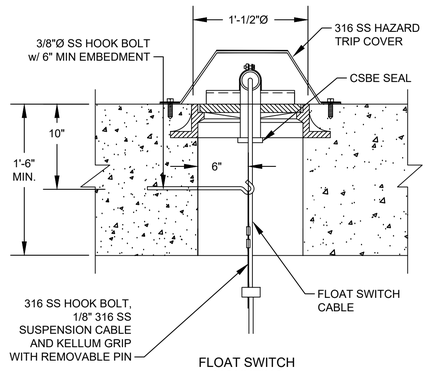

FLOAT SWITCH
MOUNTING

SECTION 7
NTS
(SEE NOTES 3, 4 & 6)

NO.	DATE	REVISION	APP.

PAPE–DAWSON
2107 CITYWEST BLVD, 3RD FLR I HOUSTON, TX 77042 I 713.428.2400
TEXAS ENGINEERING FIRM #470 I TEXAS SURVEYING FIRM #10028800

GAI
Gupta & Associates, Inc.
CONSULTING ENGINEERING
Registration No. F-2593
302 Dennis St.
Houston, Texas 77006
Tel: 713-636-2936
Fax: 713-636-2987
email: hforouzan@gaiconsulting.com

SURVEYED BY:
PAPE–DAWSON ENGINEERS
FB NO. 24–018

THIS DOCUMENT IS RELEASED FOR INTERIM REVIEW UNDER THE AUTHORIZATION OF HOSS FOROUZAN, P.E. (#77748) AND IS **NOT TO BE USED FOR CONSTRUCTION.**

CITY OF HOUSTON
HOUSTON PUBLIC WORKS

LIFT STATION REHABILITATION AND RECONSTRUCTION
BEN'S BRANCH, WOODLAND RIDGE, ELMWOOD HILLS, FOREST SHORES, TRAIL RIVER, RIVERLAWN

ELECTRICAL

RADAR LEVEL TRANSMITTER GAUGING SYSTEM INSTALLATION & DETAILS SHEET 1 OF 2

WBS NUMBER	FOR CITY OF HOUSTON USE ONLY
R–000267–0180–3	
DRAWING SCALE	
AS NOTED	
CITY OF HOUSTON PM	
BRENDA JOHNSON P.E.	
SHEET NO. XX OF XX	

GE–07

FILE PATH: O:\H8107_Lift Station Rehabilitation And Reconstruction (Pape Dawson)\6 Drawings\Electrical\Working\H8107_GE–07.dwg

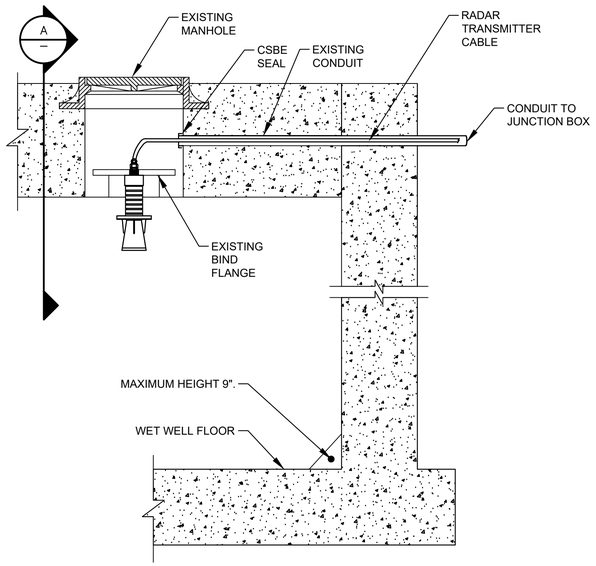

RADAR LEVEL TRANSMITTER MOUNTING
(TYP. LT-1, LT-2)

DETAIL 8
NTS

(SEE NOTES 1, 2, 4, 6 & 7)

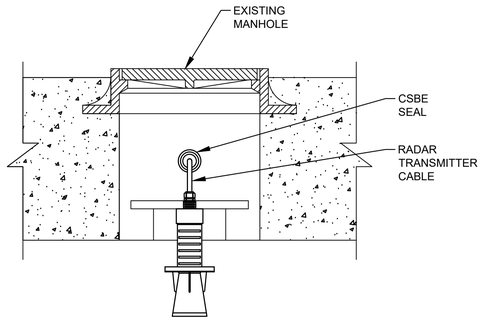

RADAR LEVEL TRANSMITTER MOUNTING
TYP. LT-1 & LT-2

SECTION 9
NTS

(SEE NOTES 1, 2, 4, 6 & 7)

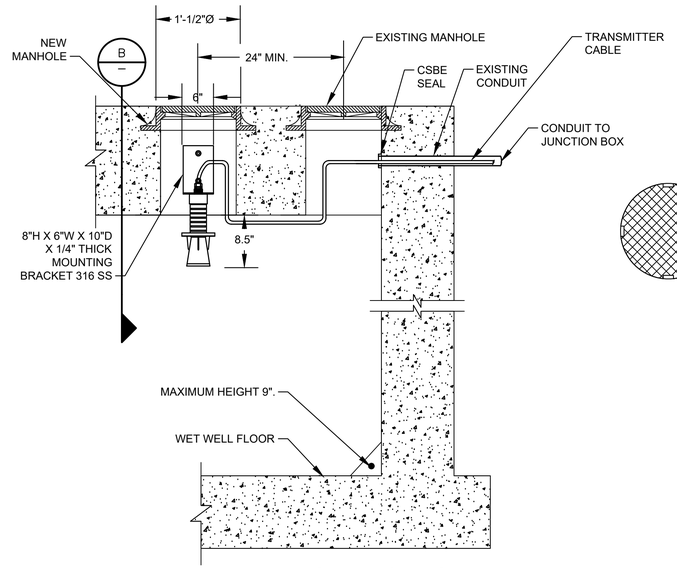

RADAR LEVEL TRANSMITTER MOUNTING
(TYP. LT-1, LT-2)

DETAIL 10
NTS

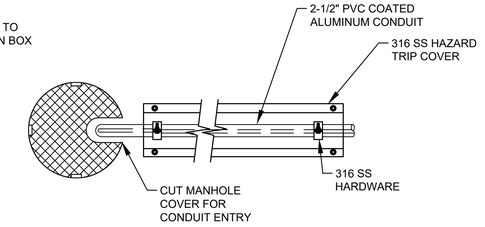

FLOAT SWITCH MOUNTING
TOP VIEW

DETAIL 14
NTS

(SEE NOTES 1, 4, 5 & 6)

NOTES:

1. NEW RADAR LEVEL TRANSMITTERS FOR LT-1, LT-2.
2. EXISTING AIRCELL MANHOLES FOR RADAR LEVEL TRANSMITTERS LT-1, LT-2.
3. EXISTING SUBMERSIBLE TRANSDUCER MANHOLES FOR RADAR LEVEL TRANSMITTERS LT-1, LT-2.
4. PAINT MANHOLE LIDS AND HATCHES HUNTER GREEN.
5. NEW MANHOLE INSTALLATION.
6. RETROFIT MANHOLE INSTALLATION.
7. DEMOLISH ALL EQUIPMENT ASSOCIATED WITH AIRCELL INSIDE THE WETWELL.
8. DEMOLISH ALL EQUIPMENT ASSOCIATED WITH SUBMERSIBLE LEVEL TRANSDUCER INSIDE THE WETWELL.
9. INSIDE WET WELL IS CLASSIFIED AS CLASS I, DIVISION 1. OUTSIDE WET WELL WITHIN 5 FEET OF WET WELL OPENINGS ARE CLASSIFIED AS CLASS I, DIVISION 2.
10. POLE HEIGHT SHALL BE LIMITED TO A MAXIMUM OF 108" OR AS RECOMMENDED BY THE MANUFACTURER.
11. CONTRACTOR SHALL SUBMIT FOR ENGINEERS REVIEW ANCHORAGE OF ALL LIGHT POLES TO CONCRETE SLABS SIGNED AND SEALED BY A REGISTERED ENGINEER IN THE STATE OF TEXAS. THE CALCULATIONS SHALL CONFORM TO THE CONTRACT DRAWINGS , SPECIFICATIONS AND ACI 318 APPENDIX D.

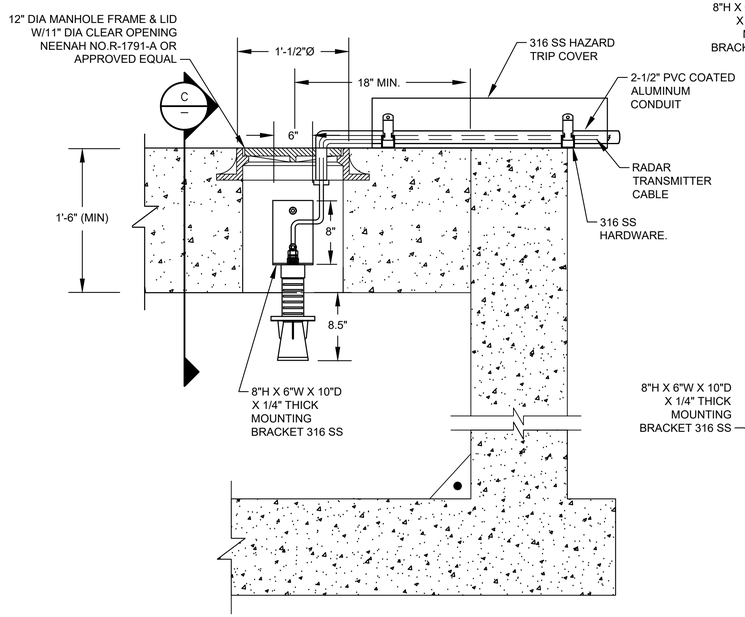

RADAR LEVEL TRANSMITTER MOUNTING
(TYP. LT-1, LT-2)

DETAIL 11
NTS

(SEE NOTES 1, 4, 5 & 6)

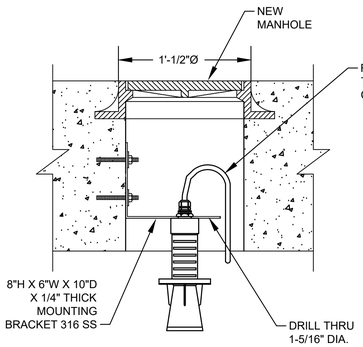

RADAR LEVEL TRANSMITTER MOUNTING
TYP. LT-1 & LT-2

SECTION 12
NTS

(SEE NOTES 1, 3, 4, 5, 6 & 8)

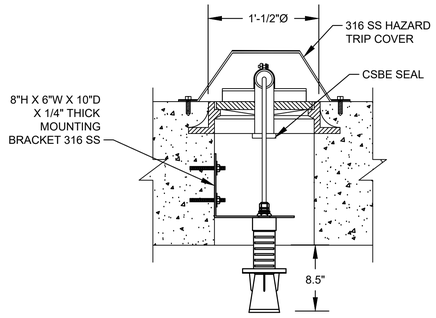

RADAR LEVEL TRANSMITTER MOUNTING
TYP. LT-1 & LT-2

SECTION 13
NTS

(SEE NOTES 1, 4, 5 & 6)

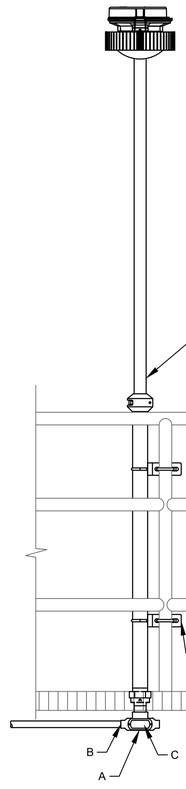

RAIL MOUNT LIGHT POLE

DETAIL 15
NTS

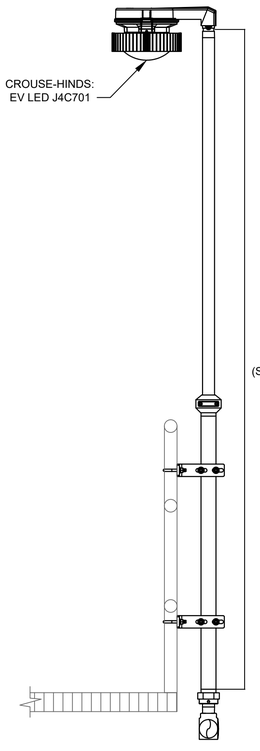

(SEE NOTE 10 & 11)

CROUSE HINDS FITTINGS OR EQUAL		
ITEM NO.	SIZE	MANUFACTURER CATALOG NO.
A	1-1/2" T	T57
B	1-1/2" TO 3/4"	RE52
C	1-1/2" COVER	570G

NO.	DATE	REVISION	APP.

PAPE–DAWSON
2107 CITYWEST BLVD, 3RD FLR I HOUSTON, TX 77042 I 713.428.2400
TEXAS ENGINEERING FIRM #470 I TEXAS SURVEYING FIRM #10028800

GAI
Gupta & Associates, Inc.
CONSULTING ENGINEERING
Registration No. F-2593
302 Dennis St.
Houston, Texas 77006
Tel: 713-636-2936
Fax: 713-636-2987
email: hforouzan@gaiconsulting.com

THIS DOCUMENT IS RELEASED FOR INTERIM REVIEW UNDER THE AUTHORIZATION OF HOSS FOROUZAN, P.E. (#77748) AND IS **NOT TO BE USED FOR CONSTRUCTION.**

SURVEYED BY:
PAPE–DAWSON ENGINEERS
FB NO. 24–018

CITY OF HOUSTON
HOUSTON PUBLIC WORKS

LIFT STATION REHABILITATION AND RECONSTRUCTION
BEN'S BRANCH, WOODLAND RIDGE, ELMWOOD HILLS, FOREST SHORES, TRAIL RIVER, RIVERLAWN

ELECTRICAL

RADAR LEVEL TRANSMITTER GAUGING SYSTEM INSTALLATION & DETAILS SHEET 2 OF 2

WBS NUMBER	FOR CITY OF HOUSTON USE ONLY
R–000267–0180–3	
DRAWING SCALE	
AS NOTED	
CITY OF HOUSTON PM	
BRENDA JOHNSON P.E.	
SHEET NO. XX OF XX	

GE–08

FILE PATH: O:\H8107_Lift Station Rehabilitation And Reconstruction (Pape Dawson)\6 Drawings\Electrical\Working\H8107_GE–08.dwg

PRIMARY FLOW ELEMENTS

M	MAGNETIC FLOW METER
	ULTRASONIC DOPPLER FLOW METER
T	ULTRASONIC TIME TRANSIT FLOW METER
	VORTEX FLOW METER
	VENTURI TUBE
	TURBINE OR PROPELLER TYPE METER
	ROTAMETER
	PITOT TUBE
	WEIR FLOW METER
	PARSHALL FLUME OR TRAPEZOIDAL FLUME
	ORIFICE PLATE
	THERMAL MASS FLOWMETER

PRIMARY LEVEL ELEMENTS

	ULTRASONIC LEVEL TRANSDUCER
	RADAR LEVEL TRANSDUCER
	PRIMARY ELEMENT PRESSURE PROBE LEVEL TRANSMITTER
	BUBBLER LEVEL TUBE ELEMENT
	CONDUCTIVE LEVEL PROBE
	FLOAT SWITCH

VALVES

	VALVE - OTHER IN-LINE TYPE NOT OTHERWISE IDENTIFIED
	THREE-WAY VALVE
	BALL VALVE
	GLOBE VALVE
	PINCH VALVE
	GATE VALVE
	NEEDLE VALVE
	DIAPHRAGM VALVE
	BUTTERFLY VALVE
	CHECK VALVE WITH FLOW DIRECTION
	PLUG VALVE
	PRESSURE-REDUCING REGULATOR INTERNAL PRESSURE TAP
	BACK PRESSURE REGULATOR INTERNAL PRESSURE TAP
	PRESSURE-REDUCING REGULATOR EXTERNAL PRESSURE TAP
	BACK PRESSURE REGULATOR EXTERNAL PRESSURE TAP

VALVES

S	SOLENOID ACTUATED VALVE
	"X" / AIR CYLINDER (P) / OIL CYLINDER (O) / HYDRAULIC CYLINDER (H) / ELECTRIC MOTOR (E) / SOLENOID VALVE (S)
OR NO SYMBOL	MANUAL VALVE

MISC PROCESS SYMBOLS

	ANNULAR TYPE SEAL
	CHEMICAL INJECTION POINT
	STRAINER
	DRAIN
	NORMAL OPERATING LEVEL
UV	UV CHAMBER
	FLOW STRAIGHTENER
	LOAD CELL
	SPRAY NOZZLE
	BLIND FLANGE
	FLANGE
	DIAPHRAGM SEAL
	PRESSURE RELIEF (OUT)
	VACUUM RELIEF (IN)

GATES

	SLUICE/SLIDE GATE
	FLOW CONTROL GATE

MOTORS

M	VARIABLE SPEED MOTOR
M	CONSTANT SPEED MOTOR

PUMPS, BLOWERS AND MISC EQUIPMENT

	CENTRIFUGAL BLOWER
	CENTRIFUGAL PUMP
	DIAPHRAGM PUMP AND MOTOR
	PROGRESSIVE CAVITY PUMP
	SUBMERSIBLE PUMP
	POSITIVE DISPLACEMENT BLOWER

PUMPS, BLOWERS AND MISC EQUIPMENT

	MIXER/FLOCCULATOR/AERATOR
	VERTICAL PUMP-1 USED WHEN DISCHARGE LINE IS IN WETWELL
	VERTICAL PUMP-2 USED WHEN DISCHARGE LINE IS EXPOSED.
	VERTICAL PUMP SHAFT USED WHEN INTAKE OF PUMP IS ENCASED.
	SUBMERSIBLE MIXER
	COMPRESSOR
	HEAT EXCHANGER
	FEED PUMP
	GRINDER/MACERATOR
	METERING PUMP
	PLUNGER PUMP
	PERISTALTIC METERING PUMP
	CENTRIFUGE
	PULSATION DAMPENER
	TURBO BLOWER

PUMPS, BLOWERS AND MISC EQUIPMENT

	ROTARY SCREEN

CONTROL ENCLOSURE, INSTRUMENTS AND SCADA

XXX / P AAA YY / BBB CCC D / ZZZ	DIGITAL/ANALOG INSTRUMENT AAA — ISA TAG (REFER TO TABLE) BBB — LOOP NUMBER CCC — LOOP NUMBER SUB D — DIVISION NUMBER P — POWER REQUIREMENT XXX — DESCRIPTION (USED ON PANEL INSTRUMENTS) YY — CHEMICAL ZZZ — LOCATION DIGITAL/ANALOG INSTRUMENT -LOCATED IN THE FIELD -NOT INSIDE OF PANEL -VISIBLE AT FIELD LOCATION -NORMALLY OPERATOR ACCESSIBLE
XXX / P AAA YY / BBB CCC D / ZZZ	DIGITAL/ANALOG INSTRUMENT -LOCATED ON PANEL -VISIBLE TO OPERATOR -NORMALLY OPERATOR ACCESSIBLE
XXX / P AAA YY / BBB CCC D / ZZZ	DIGITAL/ANALOG INSTRUMENT -LOCATED INSIDE PANEL -NOT VISIBLE TO OPERATOR -NORMALLY NOT ACCESSIBLE
XXX / AAA / BBB CCC	DISPLAY (INDICATION/CONTROLLER) AAA — ISA TAG (REFER TO TABLE) BBB — LOOP NUMBER CCC — LOOP NUMBER SUB XXX — DESCRIPTION DISPLAY (INDICATION/CONTROLLER) -LOCATED IN THE FIELD -NOT INSIDE OF PANEL -VISIBLE AT FIELD LOCATION -NORMALLY OPERATOR ACCESSIBLE
XXX / AAA / BBB CCC	DISPLAY (INDICATION/CONTROLLER) -LOCATED ON PANEL -VISIBLE TO OPERATOR -NORMALLY OPERATOR ACCESSIBLE
XXX / AAA / BBB CCC	DISPLAY (INDICATION/CONTROLLER) -LOCATED INSIDE PANEL -NOT VISIBLE TO OPERATOR -NORMALLY NOT ACCESSIBLE
-	INTERLOCKING RELAY

CONTROL ENCLOSURE AND SCADA

	DIGITAL INPUT
	DIGITAL OUTPUT
	ANALOG INPUT
	ANALOG OUTPUT
	SURGE SUPPRESSOR
	OPTO ISOLATOR
/	SIGNAL CONVERTER/ ISOLATOR */* - (INPUT/OUTPUT) * DEFINED AS FOLLOWS: E - VOLTAGE I - CURRENT P - PNEUMATIC PD - PULSE DURATION H - HYDRAULIC O - ELECTROMAGNETIC, SONIC R - RESISTANCE (ELECTRIC)

CONTROL ENCLOSURE, INSTRUMENTS AND SCADA

F(X)

PLC/RTU LOGIC

FUNCTION SYMBOLS AND ABBREVIATIONS

K	PROPORTIONAL GAIN OR ATTENUATE (INPUT:OUTPUT)
- K	REVERSE PROPORTIONAL GAIN OR ATTENUATE (INPUT:OUTPUT)
Σ	SUMMING
Σ/n	AVERAGING
Δ	SUBTRACTING
√	EXTRACT SQUARE ROOT
÷	DIVIDE
X	MULTIPLY
S	INTEGRATE
+	BIAS POSITIVE
-	BIAS NEGATIVE
F(x)	NONLINEAR OR UNSPECIFIED FUNCTION
>	HIGH SELECT
<	LOW SELECT
⊦	HIGH LIMIT
⊥	LOW LIMIT

INSTRUMENT (COMMON HOUSING)	INSTRUMENT (SEPERATOR HOUSING)	INSTRUMENT (PART OF MAJOR EQUIPMENT)

GENERAL NOTES:

1. THIS IS A GENERAL LEGEND SHEET, SOME SYMBOLS AND ABBREVIATIONS MAY NOT APPLY TO THIS SPECIFIC PROJECT.
2. THIS LEGEND APPLIES TO INSTRUMENTATION DIAGRAMS ONLY AND MAY DIFFER FROM LEGENDS FOR OTHER SHEETS.
3. IN GENERAL THIS LEGEND SHEET AND THE INSTRUMENTATION DIAGRAMS ARE BASED ON INTERNATIONAL SOCIETY OF AUTOMATION, STANDARDS FOR PRACTICES FOR INSTRUMENTATION, STANDARD S5.1 SOME MODIFICATIONS, ADDITIONS AND ALTERATIONS HAVE BEEN MADE AS REQUIRED TO ACCOMMODATE THE PROJECT REQUIREMENTS.
4. SOME PROCESS ITEMS, SUCH AS EQUIPMENT ISOLATION VALVES, BYPASS LINES, ETC., WHICH ARE NOT CRITICAL FOR AN UNDERSTANDING OF THE INSTRUMENTATION AND CONTROL FUNCTIONS ARE NOT SHOWN ON THE INSTRUMENTATION SHEETS.
5. SEE ELECTRICAL SHEETS AND SPECIFICATIONS FOR ADDITIONAL CONTROL AND INTERLOCK REQUIREMENTS FOR EQUIPMENT NOT SHOWN OR NOT PROVIDED BY THE INSTRUMENTATION SUPPLIER.
6. IN THE EVENT OF DISCREPANCY BETWEEN THE PROCESS & INSTRUMENTATION DIAGRAMS AND THE LOOP DIAGRAMS, THE INFORMATION FROM THE LOOP DIAGRAMS SHALL BE USED.

HAND SWITCH ABBREVIATIONS:

HOA	HAND/OFF/AUTO
HOR	HAND/OFF/REMOTE
LOC	LOCAL/OFF/COMPUTER
LOR	LOCAL/OFF/REMOTE
LOS	LOCKOUT STOP
OSC	OPEN/STOP/CLOSE
RSL	RAISE/STOP/LOWER
L/C	LOCAL/COMPUTER
L/R	LOCAL/REMOTE
O/C	OPEN/CLOSE
S/S	START/STOP
A/M	AUTO/MANUAL
H/C	HAND/COMPUTER
PB	PUSHBUTTON

GENERAL NOTE

THIS IS A STANDARD LEGEND. SOME SYMBOLS MAY NOT APPEAR ON THE DRAWINGS.

NO.	DATE	REVISION	APP.

PAPE-DAWSON
2107 CITYWEST BLVD, 3RD FLR I HOUSTON, TX 77042 I 713.428.2400
TEXAS ENGINEERING FIRM #470 I TEXAS SURVEYING FIRM #10028800

GAI
Gupta & Associates, Inc.
CONSULTING ENGINEERING
Registration No. F-2593
302 Dennis St.
Houston, Texas 77006
Tel: 713-636-2936
Fax: 713-636-2987
email: bforouzan@gaiconsulting.com

THIS DOCUMENT IS RELEASED FOR INTERIM REVIEW UNDER THE AUTHORIZATION OF HOSS FOROUZAN, P.E. (#77748) AND IS **NOT TO BE USED FOR CONSTRUCTION.**

SURVEYED BY:
PAPE-DAWSON ENGINEERS
FB NO. 24-018

CITY OF HOUSTON
HOUSTON PUBLIC WORKS

LIFT STATION REHABILITATION AND RECONSTRUCTION
BEN'S BRANCH, WOODLAND RIDGE, ELMWOOD HILLS, FOREST SHORES, TRAIL RIVER, RIVERLAWN

ELECTRICAL

INSTRUMENTATION LEGENDS & SYMBOLS SHEET 1 OF 2

WBS NUMBER	FOR CITY OF HOUSTON USE ONLY
R-000267-0180-3	
DRAWING SCALE	
AS NOTED	
CITY OF HOUSTON PM	
BRENDA JOHNSON P.E.	
SHEET NO. XX OF XX	

GI-01

FILE PATH: O:\H8107_Lift Station Rehabilitation And Reconstruction (Pape Dawson)\6 Drawings\Electrical\Working\H8107_GI-01.dwg

LINE SYMBOLS

	MAJOR PROCESS LINE
	MINOR PROCESS LINE
	FUTURE PROCESS LINE
	EXISTING PROCESS LINE
	HARDWIRED SIGNAL
	SOFT LINK
— L — L —	HYDRAULIC LINK
— // — // —	PNEUMATIC LINK
— x — x —	CAPILLARY TUBE OR FILLED SYSTEM SIGNAL
	ELECTROMAGNET OR SONIC SIGNAL (GUIDED)
DESCRIPTION X SHEET# Y	(USED WHEN REFERRING TO A SHEET IN THE DESIGN SET) DESCRIPTION - WHERE FLOW IS GOING SHEET# - WHAT SHEET PROCESS CONTINUES ON X - USED WHEN TWO OR MORE ARROWS ARE REFERING TO THE SAME SHEET. Y - USED WHEN TWO OR MORE ARROWS ARE REFERRING TO THE SAME SHEET.
DESCRIPTION	(USED WHEN REFERRING TO A SHEET NOT IN THE DESIGN SET) DESCRIPTION - WHERE FLOW IS GOING
CAT5e — CAT5e	CAT-5e ETHERNET CABLE
CAT6 — CAT6	CAT-6 ETHERNET CABLE
- -	MODBUS PLUS CABLE
— —	RS-485 CABLE
RS-232 — RS-232	RS-232 CABLE
POE — POE	POWER OVER ETHERNET CABLE
T1 — T1	T1 FIBER CONNECTION
FO — FO	NON-SPECIFIC FIBER OPTIC CABLE
100 — 100	FIBER 100BASE-FX
1000 — 1000	FIBER 1000BASE-FX
	SIGNAL CROSSING
	PROCESS LINE CROSSING
	PROCESS LINE/ HARDWIRE SIGNAL CROSSING

EQUIPMENT/LOOP TAGGING

X	EQUIPMENT TAG USED TO IDENTIFY NON-INSTRUMENT EQUIPMENT
X	LOOP TAG USED TO TIE THE PROCESS FLOW DIAGRAM TO A LOOP DIAGRAM

STANDARD VALVE AND PIPING USAGE

PDIT 1	BLOCK/BLEED VALVE ARRANGEMENT
PI 1	INSTRUMENTS WITH VALVE ONLY
PI 1	INSTRUMENTS WITH DIAPHRAGM SEAL
PI 1	INSTRUMENTS WITH ANNULAR SEAL

PANEL DETAIL SYMBOLS

RUN	INDICATING LIGHT -R RED (ACTIVE EQUIPMENT) -G GREEN (EQUIPMENT OFF) -W WHITE (POWER) -B BLUE (CONDITION IE BACKWASH IN PROGRESS) -A AMBER (ALARM CONDITION)
H/O/A	SWITCH -L/R (LOCAL - REMOTE) -L/O/A (LOCAL - OFF - AUTO) -L/O/R (LOCAL - OFF - REMOTE) -H/O/A (HAND - OFF - AUTO) -H/O/R (HAND - OFF - REMOTE)
START	PUSHBUTTON
START	PUSHBUTTON
	HORN
	BEACON
OIT	OPERATOR INTERFACE TERMINAL

SECURITY SYSTEM SYMBOLS

CCTV	CLOSED CIRCUIT TELEVISION CAMERA
PTZ	PAN, TILT, ZOOM CAMERA

GENERAL ABBREVIATIONS

AI	ANALOG INPUT
AL	ALARM PILOT LIGHT
AO	ANALOG OUTPUT
AS	AIR SUPPLY
ASP	APPLICATION SERVICE PROVIDER
BFV	BUTTERFLY VALVE
CCTV	CLOSED CIRCUIT TELEVISION
CH4	METHANE
CL2	CHLORINE
COND	CONDUCTIVITY
COMP	COMPUTER
CP	CONTROL PANEL
CPU	CENTRAL PROCESSING UNIT
CRC	CONTROL ROOM CONSOLE
CTU	CENTRAL TELEMETRY UNIT
DCU	DISTRIBUTED CONTROL UNIT
DI	DIGITAL OR DISCRETE INPUT
DO	DISSOLVED OXYGEN OR DIGITAL OUTPUT
DPU	DISTRIBUTED PROCESSING UNIT
EPP	ETHERNET PATCH PANEL
ES	EMERGENCY STOP
ESW	ETHERNET SWITCH
ETM	ELAPSED TIME METER
FC	FAIL CLOSED
FCP	FIELD CONTROL PANEL
FCS	FILTER CONTROL STATION
FCV	FLOW CONTROL VALVE
FLP	FAIL LAST POSITION
FO	FAIL OPEN
FOPP	FIBER OPTIC PATCH PANEL
FPR	FEEDER PROTECTION RELAY
H2S	HYDROGEN SULFIDE
HMI	HUMAN MACHINE INTERFACE
JB	JUNCTION BOX
IO	INPUT/OUTPUT
IR	INFARED
LAS	LIQUID AMMONIA SULFATE
LCP	LOCAL CONTROL PANEL
LCS	LOCAL CONTROL STATION
LT	LEVEL TRANSMITTER
LPU	LOCAL PROCESSING UNIT
LTS	LOCAL TERMINAL SYSTEM
MC	MOTOR CONTROLLER
NAOCL	SODIUM HYPOCHLORIDE
NC	NORMALLY CLOSED
NH3	AMMONIA
NIM	NETWORK INTERFACE MODULE
NO	NORMALLY OPEN
MCC	MOTOR CONTROL CENTER
MM	MULTI MODE FIBER OPTIC CABLE
MPR	MOTOR PROTECTION RELAY
OIT	OPERATIONS INTERFACE TERMINAL
OL	OVERLOAD
OWS	OPERATOR WORKSTATION
PB	PUSH BUTTON
PCSI	PROCESS CONTROL SYSTEM INTEGRATOR
pH	HYDROGEN ION
PLC	PROGRAMMABLE LOGIC CONTROLLER
PMCS	PROCESS MONITORING CONTROL SYSTEM
POLY	POLYMER
PQM	POWER QUALITY METER
PS	POWER SUPPLY
PSU	POWER SUPPLY UNIT
PV	PINCH VALVE
RBC	REMOTE BASE CONTROLLER
RIO	REMOTE INPUT OUTPUT
RTU	REMOTE TERMINAL UNIT
SCADA	SUPERVISORY CONTROL AND DATA AQUISITION
SM	SINGLE MODE FIBER OPTIC CABLE
SO2	SULFUR DIOXIDE
SOL	SOLENOID
SPD	SURGE PROTECTION DEVICE
UPS	UNINTERRUPTIBLE POWER SUPPLY
TC	TERMINATION CABINET
TURB	TURBIDITY
VIB	VIBRATION
VFD	VARIABLE FREQUENCY DRIVE
VLV	VALVE

MEANINGS OF IDENTIFICATION LETTERS

THIS TABLE APPLIES ONLY TO THE FUNCTIONAL IDENTIFICATION OF INSTRUMENTS.

	FIRST LETTER		SUCCEEDING LETTERS		
	MEASURED OR INITIATING VARIABLE	MODIFIER	READOUT OR PASSIVE FUNCTION	OUTPUT FUNCTION	MODIFIER
A	ANALYSIS/ANALYTICAL		ALARM		
B	BURNER, COMBUSTION			CLOSE, STOP, DECREASE (1)	
C	CONDUCTIVITY			CONTROL	
D	DENSITY (MASS) OR SPECIFIC GRAVITY	DIFFERENTIAL		OPEN START, INCREASE (1)	
E	VOLTAGE (EMF)		SENSOR (PRIMARY ELEMENT)		
F	FLOW RATE	RATIO (FRACTION)			FAIL (1)
G	GAUGING (DIMENSIONAL)		GLASS VIEWING DEVICE		
H	HAND				HIGH OR OPEN
I	CURRENT (ELECTRICAL)		INDICATE		
J	POWER	SCAN			
K	TIME OR TIME SCHEDULE	TIME RATE OR CHANGE		CONTROL STATION	
L	LEVEL		LIGHT (PILOT)		LOW OR CLOSED
M	MOISTURE, HUMIDITY, MOTOR, MOTION	MOMENTARY		MOTOR (1)	MIDDLE OR INTERMEDIATE
N	USERS CHOICE		USER'S CHOICE		ON OR OPERATE (1)
O	USER'S CHOICE		ORIFICE (RESTRICTION)		OVERLOAD (1)
P	PRESSURE OR VACUUM		POINT (TEST CONNECTION)	PUMP (1)	
Q	QUANTITY (2)	INTEGRATE OR TOTALIZE			
R	RADIATION		RECORD		
S	SPEED OR FREQUENCY	SAFETY		SWITCH	
T	TEMPERATURE			TRANSMIT	
U	MULTIVARIABLE (2)		MULTIFUNCTION (2)	MULTIFUNCTION (2)	MULTIFUNCTION (2)
V	VIBRATION, MECHANICAL ANALYSIS			VALVE, DAMPER OR LOUVER	
W	WEIGHT OR FORCE		WELL		UNCLASSIFIED (2)
X	UNCLASSIFIED (2)	X AXIS	UNCLASSIFIED (2)	UNCLASSIFIED (2)	UNCLASSIFIED (2)
Y	EVENT, STATE, PRESENCE	Y AXIS		RELAY, COMPUTE, CONVERT	
Z	POSITION, DIMENSION	Z AXIS		DRIVE, ACTUATE OR UNCLASSIFIED FINAL CONTROL ELEMENT	

COMMON HMI/INSTRUMENT ISA TAGGING

ABBREVIATION	MEANING
AIT	ANALYTICAL INDICATING TRANSMITTER
AE	ANALYTICAL ELEMENT
AI	CHEMICAL RESIDUAL/INDICATION
CT	CYCLE TIMER
FIT	FLOW INDICATING TRANSMITTER
FE	FLOW ELEMENT
FI	FLOW INDICATION
FS	FLOAT SWITCH
HS	HAND SWITCH
JAL	POWER ALARM LOW
II	CURRENT INDICATION
LIT	LEVEL INDICATING TRANSMITTER
LE	LEVEL ELEMENT
LI	LEVEL INDICATION
LSH	LEVEL SWITCH HIGH
LSL	LEVEL SWITCH LOW
LAL	LEVEL ALARM LOW
LAH	LEVEL ALARM HIGH
PIT	PRESSURE INDICATING TRANSMITTER
PE	PRESSURE ELEMENT
PI	PRESSURE INDICATION
PPU	PERPETUAL POWER UNIT
PSH	PRESSURE SWITCH HIGH
PSL	PRESSURE SWITCH LOW
SI	SPEED INDICATION
SIC	SPEED INDICATING CONTROLLER
TIT	TEMPERATURE INDICATING TRANSMITTER
TE	TEMPERATURE ELEMENT
TI	TEMPERATURE INDICATION
TSH	TEMPERATURE SWITCH HIGH
WIT	WEIGHT INDICATING TRANSMITTER
WE	WEIGHT ELEMENT
WI	WEIGHT INDICATION
XA	FAULT ANNUNCIATION
YL	MISC. EVENT LIGHT (IN REMOTE)

COMMON HMI/INSTRUMENT ISA TAGGING

ABBREVIATION	MEANING
ZCH	OPEN GATE/VALVE
ZCL	CLOSE GATE/VALVE
ZSH	POSITION SWITCH HIGH
ZSL	POSITION SWITCH LOW
ZLH	VALVE/GATE OPEN
ZLL	VALVE/GATE CLOSED
ZIT	POSITION INDICATING TRANSMITTER

GENERAL NOTE

THIS IS A STANDARD LEGEND. SOME SYMBOLS MAY NOT APPEAR ON THE DRAWINGS.

NO.	DATE	REVISION	APP.

PAPE–DAWSON
2107 CITYWEST BLVD, 3RD FLR I HOUSTON, TX 77042 I 713.428.2400
TEXAS ENGINEERING FIRM #470 I TEXAS SURVEYING FIRM #10028800

GAI
Gupta & Associates, Inc.
CONSULTING ENGINEERING
Registration No. F-2593
302 Dennis St.
Houston, Texas 77006
Tel: 713-636-2936
Fax: 713-636-2987
email: hforouzan@gaiconsulting.com

SURVEYED BY:
PAPE–DAWSON ENGINEERS
FB NO. 24–018

THIS DOCUMENT IS RELEASED FOR INTERIM REVIEW UNDER THE AUTHORIZATION OF HOSS FOROUZAN, P.E. (#77748) AND IS **NOT TO BE USED FOR CONSTRUCTION.**

CITY OF HOUSTON
HOUSTON PUBLIC WORKS

LIFT STATION REHABILITATION AND RECONSTRUCTION
BEN'S BRANCH, WOODLAND RIDGE, ELMWOOD HILLS, FOREST SHORES, TRAIL RIVER, RIVERLAWN

ELECTRICAL

INSTRUMENTATION LEGENDS & SYMBOLS SHEET 2 OF 2

WBS NUMBER	FOR CITY OF HOUSTON USE ONLY
R–000267–0180–3	
DRAWING SCALE	
AS NOTED	
CITY OF HOUSTON PM	
BRENDA JOHNSON P.E.	
SHEET NO. XX OF XX	

GI–02

FILE PATH: O:\H8107_Lift Station Rehabilitation And Reconstruction (Pape Dawson)\6 Drawings\Electrical\Working\H8107_GI–02.dwg

DocuSign Envelope ID: CB71C116-B716-4899-A5EE-0D2F2CC55AF6

GENERAL NOTES

1. THE CONTRACTOR SHALL PROVIDE AND INSTALL TRAFFIC CONTROL DEVICES IN CONFORMANCE WITH PART VI OF THE TEXAS MANUAL ON UNIFORM TRAFFIC CONTROL DEVICES (TMUTCD) LATEST EDITION WITH REVISIONS DURING THE ENTIRE CONSTRUCTION PERIOD.
2. ALL SIGNS AND TRAFFIC CONTROL DEVICES SHALL CONFORM THE LATEST VERSION OF THE TMUTCD.
3. NO LANES SHALL BE CLOSED DURING THE HOURS OF 7:00 AM TO 9:00 AM AND 4:00 PM TO 6:00 PM MONDAY THRU FRIDAY WITHOUT APPROVAL OF THE CITY TRAFFIC ENGINEER.
4. NO WORK SHALL BE PERFORMED IN RESIDENTIAL AREAS FROM 7:00 PM TO 7:00 AM.
5. CONTRACTOR SHALL MAINTAIN APPROVED NUMBER OF THROUGH LANES OF TRAFFIC IN EACH DIRECTION DURING CONSTRUCTION WORKING HOURS. TRAFFIC CONTROL PLANS SHALL INCLUDE ONE-WAY AND/OR DETOUR PLANS. CONTRACTOR SHALL MAINTAIN ADA COMPLIANT PEDESTRIAN ACCESS TO BUS STOPS AND ADEQUATE BUS ACCESS TO ALL THE BUS STOPS.
6. CONTRACTOR SHALL MAINTAIN TRAFFIC LANES AND DETOURS ACCORDING TO TRAFFIC CONTROL PLANS DURING WORKING HOURS.
7. CONTRACTOR SHALL COVER OPEN PAVEMENT EXCAVATIONS FOR MINOR UTILITY WORK WITH ANCHORED STEEL PLATES DURING NON-WORKING HOURS, AND OPEN LANES FOR NORMAL TRAFFIC FLOW WHEN FEASIBLE.
8. IF THE CONTRACTOR CHOOSES TO USE A DIFFERENT METHOD OF "TRAFFIC CONTROL PLANS" DURING THE CONSTRUCTION THAN WHAT IS OUTLINED IN THE CONTRACT DRAWINGS, THE CONTRACTOR SHALL BE RESPONSIBLE TO PREPARE AND SUBMIT AN ALTERNATE SET OF TRAFFIC CONTROL PLANS TO THE CITY OF HOUSTON PROJECT MANAGER FOR APPROVAL TEN WORKING DAYS PRIOR TO IMPLEMENTATION. THESE PLANS SHALL BE DRAWN TO SCALE ON REPRODUCIBLE MYLARS AND SHALL BE SEALED BY A LICENSED ENGINEER IN THE STATE OF TEXAS. OFFICE OF CITY ENGINEER, MOBILITY PERMITS SECTION REPRESENTATIVE APPROVAL IS REQUIRED TO ACCEPT THE PROPOSED CHANGES.
9. CONTRACTOR SHALL SECURE LANE/SIDEWALK/BICYCLE FACILITY CLOSURE PERMITS FROM OFFICE OF CITY ENGINEER (MOBILITY PERMIT SECTION AT https://geohub.houstontx.gov) BEFORE IMPLEMENTING THE TRAFFIC CONTROL PLAN. THE APPLICATION MUST BE SUBMITTED AT LEAST TEN DAYS PRIOR TO THE IMPLEMENTATION OF THE TRAFFIC CONTROL PLAN AND/OR BEGINNING CONSTRUCTION WORK. THE CONTRACTOR SHALL PROVIDE TRAFFIC CONTROL PLANS, CONSTRUCTION SEQUENCING, AND CONSTRUCTION SCHEDULE WITH THE APPLICATION.
10. CONTRACTOR SHALL HAVE APPROVED TRAFFIC CONTROL PLAN AND PERMIT AT THE JOB SITE FOR INSPECTION AT ALL TIMES.
11. DURING PAVEMENT SURFACE RESTORATION PROJECTS; THE CONTRACTOR SHALL NOT OPEN CLOSED LANES UNTIL THE PAVEMENT SURFACE HAS CURED ENOUGH TO ALLOW VEHICULAR TRAFFIC ACCORDING TO CITY OF HOUSTON STANDARD SPECIFICATIONS.
12. THE CONTRACTOR IS RESPONSIBLE FOR SCHEDULING AND COORDINATING ALL CONSTRUCTION ACTIVITIES WITH STAKE HOLDERS IN THE VICINITY INCLUDING EMERGENCY RESPONSE AGENCIES SUCH AS HOUSTON POLICE DEPARTMENT, HOUSTON FIRE DEPARTMENT, AND METROPOLITAN TRANSIT AUTHORITY.
13. CONTRACTOR SHALL BE RESPONSIBLE FOR ISSUING ALL WORK DIRECTIVES TO ALL SUB-CONTRACTORS, UTILITY COMPANIES, AND ALL OTHER ENTITIES PERFORMING CONSTRUCTION WORK ASSOCIATED WITH THE PROJECT.
14. NOTHING IN THESE NOTES OR PLANS SHALL RELIEVE THE CONTRACTOR OF THE RESPONSIBILITY FOR JOB SITE CONDITIONS DURING THE COURSE OF CONSTRUCTION OF THE PROJECT; INCLUDING SAFETY OF ALL MODES OF TRANSPORTATION, PERSONS, AND PROPERTY, AND THAT THIS REQUIREMENT SHALL APPLY CONTINUOUSLY AND NOT BE LIMITED TO WORKING HOURS.
15. THE OFFICE OF CITY ENGINEER (MOBILITY PERMITS GROUP) PER THE DIRECTION OF THE CITY TRAFFIC ENGINEER HAVE THE RIGHT TO DEMAND THE INSTALLATION OF ADDITIONAL TRAFFIC CONTROL DEVICES OR MODIFICATIONS OF THESE PLANS AND NOTES, AS DEEMED NECESSARY TO PROMOTE THE SAFE AND ORDERLY FLOW OF TRAFFIC, INCLUDING PEDESTRIANS AND BICYCLES, THROUGH THE CONSTRUCTION WORK ZONE. THE CONTRACTOR SHALL COMPLY WITH THESE ADDITIONAL REQUESTS OR MODIFICATIONS WITH DUE DILIGENCE.
16. ALL EXISTING TRAFFIC CONTROL SIGNS AND PAVEMENT MARKINGS SHALL BE MAINTAINED IN VISIBLE LOCATIONS DURING CONSTRUCTION UNLESS PRIOR WRITTEN APPROVAL IS OBTAINED FROM CITY OF HOUSTON PROJECT MANAGER. THE CONTRACTOR SHALL RESTORE OR REPLACE (AT THE DISCRETION OF THE CITY TRAFFIC ENGINEER) ANY PAVEMENT MARKING OR SIGNING DAMAGE DURING CONSTRUCTION OPERATIONS, INCLUDING RAISED PAVEMENT MARKERS (RPMS).
17. WHEN ENTERING OR LEAVING ROADWAYS CARRYING PUBLIC TRAFFIC, THE CONTRACTOR'S EQUIPMENT, WHETHER EMPTY OR LOADED SHALL IN ALL CASES YIELD TO PUBLIC TRAFFIC WITH THE ASSISTANCE OF CONTRACTOR PROVIDED CERTIFIED FLAGGER/PEACE OFFICER.
18. ACCESS TO DRIVEWAYS ADJACENT TO THE CONSTRUCTION WORK ZONE SHALL BE MAINTAINED AT ALL TIMES AS MUCH AS POSSIBLE. ADDITIONAL CONES AND/OR DELINEATORS MAY BE REQUIRED TO DELINEATE THE DRIVEWAY ACCESS ROUTE THROUGH THE CONSTRUCTION WORK ZONE. A MINIMUM OF ONE TRAVEL LANE SHALL BE MAINTAINED ACROSS THE DRIVEWAYS, UNLESS PRIOR WRITTEN APPROVAL IS OBTAINED FROM CITY OF HOUSTON PROJECT MANAGER.
19. SPILLAGE RESULTING FROM HAULING OPERATIONS ALONG OR ACROSS ANY PUBLIC TRAVELED WAY SHALL BE REMOVED IMMEDIATELY BY THE CONTRACTOR.
20. THE CONTRACTOR SHALL SUBMIT AN APPLICATION FOR TEMPORARY PARKING RESTRICTIONS IF THERE ARE PARKING METERS LOCATED AT THE PROPOSED LANE CLOSURES FROM PARKING MANAGEMENT DIVISION (832-393-8690) AT LEAST TEN BUSINESS DAYS BEFORE IMPLEMENTATION OF LANE CLOSURES. IN ADDITION, TEMPORARY NO PARKING SIGNS SHALL BE POSTED 24 HOURS PRIOR TO COMMENCEMENT OF WORK.
21. ADDITIONAL OFF DUTY OFFICERS/FLAGGERS MAY BE REQUESTED TO DIRECT TRAFFIC WHEN LANES ARE BLOCKED AT THE DISCRETION OF THE CITY PROJECT MANAGER EVEN IF THEY ARE NOT SPECIFICALLY IDENTIFIED ON THE PROJECT PLANS.
22. THE CONTRACTOR SHALL REPLACE WITHIN 72 HOURS, ALL TRAFFIC SIGNAL LOOP DETECTORS DAMAGED DURING CONSTRUCTION.
23. IN GENERAL, A SOLAR POWERED FLASHING ARROW BOARD SHALL BE REQUIRED ON ALL MAJOR THOROUGHFARE LANES CLOSURES. EXCEPTIONS TO FLASHING ARROW BOARDS AND/OR IMPLEMENTATION ON RESIDENTIAL LANE CLOSURES SHALL BE APPROVED BY CITY TRAFFIC ENGINEER.
24. APPROVED TRAFFIC CONTROL PLAN SHALL BE IN PLACE BEFORE STARTING ANY EXCAVATION.
25. WATER FILLED BARRIERS CAN BE USED AS INSTRUCTED BY THE ENGINEER AND APPROVED BY THE CITY FOR PROJECTS WHERE SPACE IS LIMITED AND HEAVY EQUIPMENT TO PLACE CONCRETE BARRIERS IS NOT FEASIBLE. WATER FILLED BARRIERS SHALL NOT BE USED ON ROADWAYS WITH A POSTED SPEED LIMIT MORE THAN 45 MPH.
26. WATER FILLED BARRIERS MUST BE INSTALLED AND MAINTAINED PER THE MANUFACTURER'S REQUIREMENTS AND ROUTINELY INSPECTED FOR DEFECTS.
27. IF WATER FILLED BARRIER IS PROVIDED, USE ENVIRONMENTALLY SAFE ANTI-FREEZING AGENT IN THE WATER WHEN IT IS APPLICABLE PER MANUFACTURER SPECIFICATIONS AND RECOVER AGENT WHEN THE BARRIER IS DRAINED.
28. DISPOSE OF WATER AND AGENT PROPERLY. DO NOT DRAIN WATER FILLED BARRIER INTO OR ACROSS AN EXISTING TRAVEL LANE.
29. PROVIDE BARRIER UNITS THAT ARE CAPABLE OF BEING LIFTED AND MOVED WHEN FILLED IF DRAINING IS NOT POSSIBLE.
30. PROVIDE WATER FILLED BARRIER THAT ACTS AS ITS OWN FREE STANDING, NON-REDIRECTIVE END TREATMENT.
31. WHEN WATER FILLED BARRIERS ARE USED TO CHANNELIZE PEDESTRIANS, THEY MUST HAVE A CONTINUOUS DETECTABLE BOTTOM FOR USERS OF LONG CANES AND THE TOP OF THE UNIT SHALL NOT BE LESS THAN 32 INCHES IN HEIGHT.
32. ANY CLOSURE OF A PEDESTRIAN OR BICYCLE FACILITY SHALL REQUIRE THE SHORTEST DETOUR THAT MAINTAINS THE SAFETY OF PEDESTRIAN AND/OR BICYCLISTS.

SPACING FOR CHANNELIZING DEVICES

A. PLASTIC DRUMS ON MERGING TAPER @ 30' C – C WITH CHEVRON SIGN @ 60' C – C AND WARNING LIGHTS FOR OVERNIGHT CLOSURE.

B. PLASTIC DRUMS ON DOWNSTREAM TAPER @ 30' C – C (RETURN TAPER AND BARRICADE ARE OPTIONAL AND DIVIDED ROADWAY SECTION)

C. PLASTIC DRUMS ON RADII @ 35' C –C.

D. PLASTIC DRUMS ON TANGENT @ 35' C – C WITH VERTICAL PANEL AT 70' C – C AND APPROVED WARNING LIGHT @ 70' C – C (FOR OVERNIGHT CLOSURE).

E. PLASTIC DRUMS IN FRONT OF CONSTRUCTION ZONE @ 20' C – C WITH VERTICAL PANEL AT 40' C – C AND APPROVED WARNING LIGHT @ 40' C – C (FOR OVERNIGHT CLOSURE).

F. CONCRETE TRAFFIC BARRIER (CTB) OR LOW PROFILE CONCRETE TRAFFIC BARRIER (LPCTB) WITH APPROVED REFLECTORS @ 10' C – C IF PAVEMENT DROP IS GREATER THAN 1 FOOT.

G. PLASTIC DRUMS W/GUARD RAIL MOUNTED.

H. SELF– RIGHTING VERTICAL PANEL SPACING.
– 4 LANES TO 2 LANES UNDIVIDED ROADWAY SECTION @ 20' C – C.
– 4 LANES DIVIDED ROADWAY TO ONE SIDE TWO WAY ROADWAY @ 20' C – C.
– LEFT LANE AND RIGHT LANE STORAGE BAYS @ 15' C – C.

I. SPACING SHOWN ON TRAFFIC CONTROL SHALL SUPERSEDE THE ABOVE SPACING.

J. SPACING MAY BE ADJUSTED TO PROVIDE DRIVEWAYS, INTERSECTIONS AND /OR MEDIAN OPENINGS.

TABLE C3 – TYPICAL SIGN SPACING, TAPER LENGTHS, AND SUGGESTED SPACING OF CHANNELIZATION DEVICES

POSTED SPEED (MPH)	SIGN SPACING "X" (FEET)	MIN. DESIRABLE TAPER LENGTH "L"			SUGGESTED MAXIMUM SPACING OF DEVICE	
		10' OFFSET	11' OFFSET	12' OFFSET	ON A TAPER	ON A TANGENT
30	120'	150'	165'	180'	30'	60'–75'
35	160'	205'	225'	245'	35'	70'–90'
40	240'	265'	295'	320'	40'	80'–100'
45	320'	450'	495'	540'	45'	90'–110'
50	400'	500'	550'	600'	50'	100'–125'
55	500'	550'	605'	660'	55'	110'–140'

TABLE C4 – STOPPING SIGHT DISTANCE AS A FUNCTION OF SPEED

POSTED SPEED (MPH)	DISTANCE "D" (FEET)
30	200
35	250
40	305
45	360
50	425
55	495

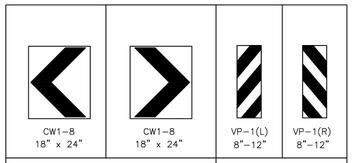

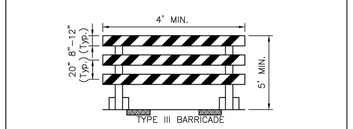

NOTE: STRIPES SHOULD SLOPE DOWNWARDS IN THE DIRECTION TOWARDS WHICH TRAFFIC IS DIRECTED.

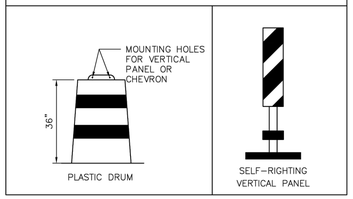

CHANNELIZATION AND BARRICADES

SIGNS SHOULD BE MOUNTED ON INDEPENDENT SUPPORT AT A 7 FOOT MOUNTING HEIGHT IN CENTER OF ROADWAY. THE SIGNS SHOULD BE A MINIMUM OF 10 FEET BEHIND TYPE III BARRICADES. ADVANCE SIGNING SHALL BE AS SPECIFIED ELSEWHERE IN THE PLANS.

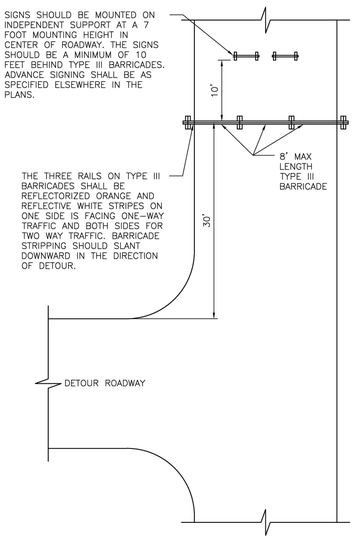

PLAN VIEW
TYPE III BARRICADE (POST AND SKID)
TYPICAL APPLICATION

LEGEND:

- SIGN
- FLAGGER
- APPROVED CHANNELIZATION DEVICE
- BARRICADE
- FLASHING ARROW PANEL
- AREA UNDER CONSTRUCTION
- EXISTING TRAVEL WAY
- TRAFFIC CONTROL PLAN DETOUR TRAVEL WAY

APPROVED BY:	APPROVED BY:
DocuSigned by: Sukut Kunwar 3EF5B0C941F9478...	DocuSigned by: HANG NGUYEN 86A29EFDA7594CD...
CITY ENGINEER	CITY TRAFFIC ENGINEER
APPROVED BY: DocuSigned by: Carol Haddock 6A9C4158178D463...	
DIRECTOR OF HOUSTON PUBLIC WORKS	
EFF DATE: NOV–27–2023	DWG NO: 01555–01

CITY OF HOUSTON
HOUSTON PUBLIC WORKS STANDARD

TCP NOTES CHANNELIZING DEVICES AND BARRICADES

	FOR CITY OF HOUSTON USE ONLY
DRAWING SCALE	
NOT TO SCALE	

NO.	DATE	REVISION	APP.

PAPE–DAWSON
2107 CITYWEST BLVD, 3RD FLR I HOUSTON, TX 77042 I 713.428.2400
TEXAS ENGINEERING FIRM #470 I TEXAS SURVEYING FIRM #10028800

PAPE–DAWSON
2107 CITYWEST BOULEVARD
3RD FLR
HOUSTON, TEXAS 77402
713–428–2400
TX FIRM #470

SURVEYED BY:
PAPE–DAWSON
FB NO. 24–018

THIS DOCUMENT IS RELEASED FOR INTERIM REVIEW UNDER THE AUTHORIZATION OF AMIRHOSSEIN SHOKOUHI, P.E. (#130835) AND IS **NOT TO BE USED FOR CONSTRUCTION.**

CITY OF HOUSTON
HOUSTON PUBLIC WORKS

LIFT STATION REHABILITATION AND RECONSTRUCTION
BEN'S BRANCH, WOODLAND RIDGE, ELMWOOD HILLS, FOREST SHORES, TRAIL RIVER, RIVERLAWN

MECHANICAL

TCP NOTES CHANNELIZING DEVICES AND BARRICADES

WBS NUMBER	FOR CITY OF HOUSTON USE ONLY
R–000267–0180–3	
DRAWING SCALE	
AS NOTED	
CITY OF HOUSTON PM	
BRENDA JOHNSON P.E.	
SHEET NO. 039 OF 338	

TCP–01

DISCLAIMER:
THE USE OF THIS STANDARD IS GOVERNED BY THE TEXAS ENGINEERING PRACTICE ACT. THE DESIGN REQUIREMENTS ON THIS STANDARD DO NOT PURPORT TO ADDRESS ALL OF THE SAFETY CONCERNS ASSOCIATED WITH THEIR USE. THE ENGINEER OF RECORD (EOR) IS TO REVIEW THESE DESIGN REQUIREMENTS AND BY AUTHORIZING THEIR USE, ACCEPTS RESPONSIBILITY FOR THEIR APPLICABILITY, ADEQUACY AND SAFETY. NO WARRANTY OF ANY KIND IS MADE BY THE CITY OF HOUSTON FOR ANY PURPOSES WHATSOEVER. THE CITY OF HOUSTON ASSUMES NO RESPONSIBILITY FOR INCORRECT RESULTS OR DAMAGES RESULTING FROM ITS USE.

FILE PATH: K:\Projects\423\77 COH LS Package\00\03 CADD\Plans\Sheets\02 Traffic Control And Survey\TCP–01 – TCP NOTES CHANNELIZING DEVICES AND BARRICADES.dwg

DocuSign Envelope ID: CB71C116-B716-4899-A5EE-0D2F2CC55AF6

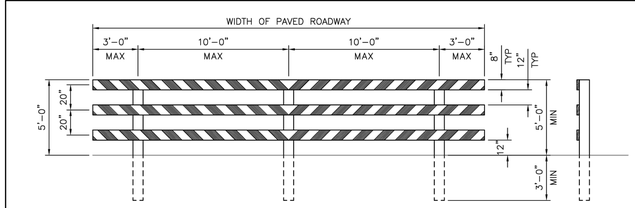

TYPE III BARRICADE FOR END OF ROAD

FOR TYPE III BARRICADE FOR END OF ROAD, THE THREE (3) RAILS SHALL BE REFLECTIVE RED AND RELFLECTIVE WHITE STRIPES ON SIDE FACING TRAFFIC

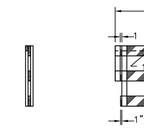

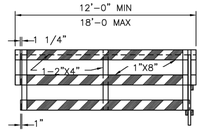

PANEL

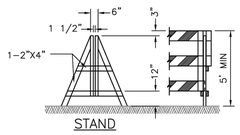

STAND

ASSEMBLY

DEMOUNTABLE TYPE III BARRICADE

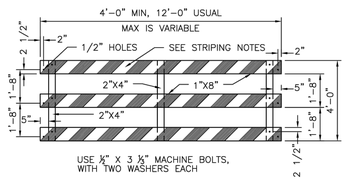

PANEL FOR TYPE III BARRICADE

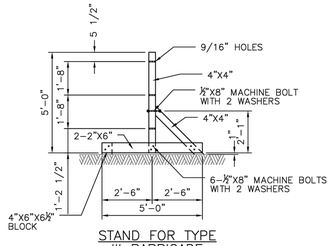

STAND FOR TYPE III BARRICADE

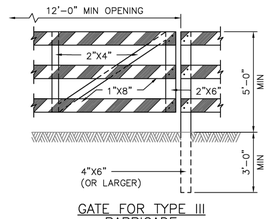

GATE FOR TYPE III BARRICADE

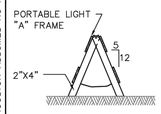

"A" FRAME

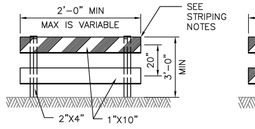

TYPE I

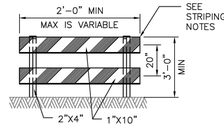

TYPE II

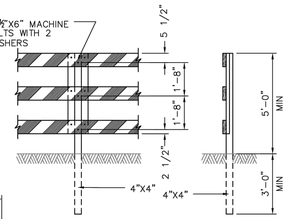

POST FOR TYPE III BARRICADE

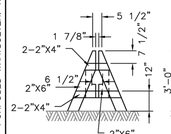

DEMOUNTABLE

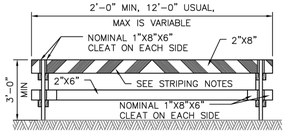

TYPE I

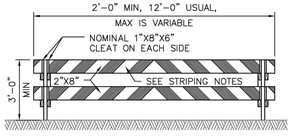

TYPE II

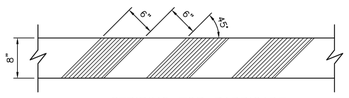

STRIPING FOR BARRICADE

BARRICADE NOTES:

1. THE MOST RECENT EDITION OF THE TEXAS MANUAL ON UNIFORM TRAFFIC CONTROL DEVICES, AND IT'S REVISIONS, SHALL GOVERN THE CONSTRUCTION AND USE OF ALL ITEMS HEREIN DESCRIBED.
2. CHANNELIZATION DEVICES OTHER THAN BARRICADES SHOULD NORMALLY BE USED FOR CHANNELIZATION PURPOSES.
3. BARRICADES SHOULD NORMALLY BE PLACED PERPENDICULAR TO THE TRAFFIC FLOW. OTHER CHANNELIZING DEVICES, SUCH AS DRUMS, VERTICAL PANELS OR PORTABLE BARRIERS, SHOULD BE USED WHERE NEEDED TO SEPARATE TRAFFIC FROM THE WORK AREA. IN ALL CASES, THE BARRICADES SHOULD BE SO LOCATED AS TO MOST ADVANTAGEOUSLY WARN AND DIRECT TRAFFIC.
4. BARRICADES MAY BE DESIGNED AND CONSTRUCTED FROM WOOD OR ANY OTHER SUITABLE MATERIAL APPROVED BY THE TMUTCD. THE CONSTRUCTION DETAILS SHOWN HEREON ARE TYPICAL AND ARE SUGGESTED DETAILS FOR WOOD SUPPORT SYSTEMS FOR BARRICADES. THE DETAILS OF RAIL WIDTH AND STRIPING, NUMBER AND SPACING OF RAILS, MINIMUM LENGTH AND HEIGHT (ABOVE PAVEMENT) OF RAILS MUST BE ADHERED TO WHEN ALTERNATE DESIGNS ARE USED.
5. BARRICADES ARE TO BE CONSTRUCTED OF CLEAN SOUND MATERIAL. ALL SURFACES ABOVE GROUND, WHICH ARE NOT STRIPED, SHALL BE WHITE EXCEPT THE UNPAINTED GALVANIZED METAL OR ALUMINUM COMPONENTS MAY BE USED. COMPONENTS MADE OF LUMBER SHALL BE PAINTED WITH A MINIMUM OF TWO COATS OF AN APPROVED BRAND OF WHITE PAINT TO SECURE THOROUGH COVERAGE AND A UNIFORM WHITE COLOR.
6. THE REFLECTORIZED WHITE AND REFLECTORIZED ORANGE (REFLECTORIZED RED) STRIPES FOR BARRICADES, DRUMS AND VERTICAL PANELS SHALL BE CONSTRUCTED OF HIGH INTESITY SHEETING AND SHALL BE MAINTAINED TO MEET THE APPEARANCE, COLOR AND REFLECTIVITY REQUIREMENTS SET BY DOTT.
7. THE CONTRACTOR SHALL MAINTAIN EACH BARRICADE IN A CLEAN AND GOOD CONDITION.
8. BARRICADES SHALL BE REMOVED UPON COMPLETION OF THE WORK AND/OR THE ELIMINATION OF THE HAZARD ON ANY SECTION.

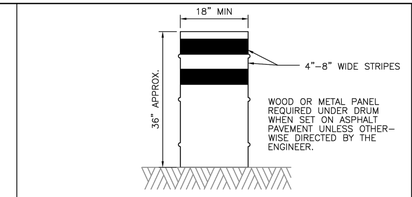

DRUMS

1. DRUMS, SET ON END, AND USED FOR TRAFFIC WARNING OR CHANNELIZATION SHALL BE APPROX 36" IN HEIGHT AND A MIN OF 18" IN DIAMETER. THE CONTRACTOR, AT HIS OPTION, MAY USE DRUMS MADE FROM STEEL BARRELS OR BLACK POLYETHYLENE PLASTIC DRUM LINERS WEIGHING APPROX EIGHT POUNDS EACH. THE MARKINGS ON DRUMS SHALL BE HORIZONTAL, CIRCUMFERENTIAL, REFLECTORIZED ORANGE AND REFLECTORIZED WHITE STRIPES, 4 TO 8 INCHES WIDE. THE FIRST REFLECTORIZED STRIPE SHOULD START WITHIN TWO (2) INCHES OF THE TOP OF THE DRUM. THERE SHALL BE AT LEAST TWO ORANGE AND TWO WHITE STRIPES ON EACH DRUM. IF THERE ARE NON–REFLECTORIZED SPACES BETWEEN THE HORIZONTAL ORANGE AND WHITE STRIPES, THEY SHALL BE NO MORE THAN 2 INCHES WIDE. METAL DRUMS SHALL BE PAINTED BLACK OR ORANGE BEFORE REFLECTORIZED STRIPES ARE ADDED. ALL DRUMS ON PROJECT WILL BE THE SAME COLOR. WHEN DRUMS ARE PLACED IN THE ROADWAY, APPROPIATE WARNING SIGNS SHOULD BE USED. DURING HOURS OF DARKNESS, A FLASHING WARNING LIGHT SHOULD BE PLACED ON DRUMS USED SINGLY AS A WARNING DEVICE. STEADY BURN ELECTRIC LIGHTS OR DELINEATORS SHOULD BE PLACED ON DRUMS USED IN SERIES FOR TRAFFIC CHANNELIZATION. DRUMS SHALL BE WEIGHTED WITH SAND TO THE EXTENT INDICATED IN THE PLANS.
2. CWI–8 CHEVRON SIGNS, CWI–6A ARROW SIGNS OR VP–I VERTICAL PANELS MOUNTED ABOVE DRUMS MAY BE USED AS SUPPLEMENTS TO DRUM DELINEATION.

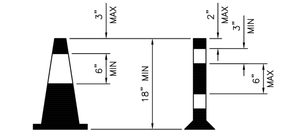

CONES

1. TRAFFIC CONES AND TUBULAR MARKERS SHALL BE A MIN OF 18" INCHES IN HEIGHT WITH A BROADENED BASE AND MAY BE MADE OF VARIOUS MATERIALS TO WITHSTAND IMPACT WITHOUT DAMAGE TO THEMSELVES OR TO VEHICLES. LARGER SIZES SHOULD BE USED ON FREEWAYS AND OTHER ROADWAYS WHERE SPEED ARE RELATIVELY HIGH OR WHERE EVER MORE CONSPICUOUS GUIDANCE IS NEEDED. ORANGE SHALL BE THE PREDOMINANT COLOR ON CONES AND TUBULAR MARKERS. THEY SHOULD BE KEPT CLEAN AND BRIGHT FOR MAX TARGET VALUE. FOR NIGHT TIME USE THEY SHALL BE REFLECTORIZED OR EQUIPPED WITH LIGHTING DEVICES FOR MAX VISIBILITY. REFLECTORIZED MATERIAL SHALL HAVE A SMOOTH, SEALED OUTER SURFACE WHICH WILL DISPLAY THE SAME APPROX COLOR DAY AND NIGHT.
2. REFLECTORIZATION OF TUBULAR MARKERS SHALL BE A MIN OF TWO THREE–INCH BANDS PLACED A MAX OF 2" FROM THE TOP WITH A MAX OF 6" BETWEEN THE BANDS. REFLECTORIZATION OF CONES SHALL BE PROVIDED BY A MIN 6" BAND PLACED A MAX OF 3" FROM THE TOP.
3. CONES OR TUBULAR MARKERS ARE GENERALLY ONLY SUITABLE FOR TEMPORARY USAGE (UP TO 8 HOURS) WITH OTHER CHANNELIZATION DEVICES SUCH AS VERTICAL PANELS OR BARRICADES PREFERRED FOR LONGER TERM USAGE. CARE SHOULD BE TAKEN TO INSURE THAT THEY REMAIN IN THEIR PROPER LOCATION AND IN AN UPRIGHT POSITION.

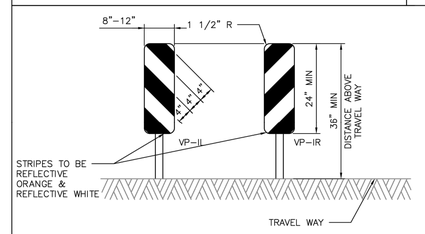

VERTICAL PANELS (VP)

VERTICAL PANELS ARE NORMALLY USED AS CHANNELIZING DEVICES TO INDICATE TANGENT OR NEARLY TANGENT ROADWAY ALIGNMENT WHERE GOOD TARGET VALUE OF A DEVICE IS NEEDED IN DAYTIME AS WELL AS THE NIGHTTIME. IN ADDITION, VERTICAL PANELS SHOULD BE USED AT THE EDGE OF SHOULDER DROP–OFFS AND OTHER SUCH AREAS AS LANE TRANSITIONS WHERE POSITIVE DAY AND NIGHT DELINEATION MAY BE REQUIRED. VERTICAL PANELS SHOULD BE MOUNTED BACK TO BACK IF USED AT THE EDGE OF CUTS ADJACENT TO TWO–WAY TWO LANE ROADWAYS. STRIPES SHOULD ALWAYS SLOPE DOWNWARD TOWARD THE TRAVELED WAY.

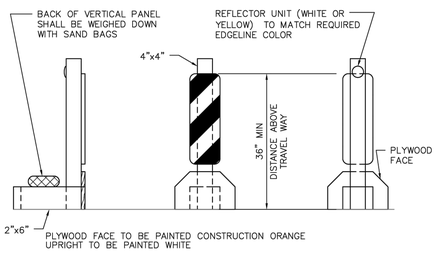

TYPICAL PORTABLE VERTICAL PANEL OR DELINEATOR

OTHER SIMILAR SUPPORTS MAY BE USED WHEN APPROVED BY TMUTCD AND DIRECTED BY THE CITY OF HOUSTON.

APPROVED BY:	APPROVED BY:
DocuSigned by: Sulail Kanwar	DocuSigned by: LAM NGUYEN
CITY ENGINEER	CITY TRAFFIC ENGINEER

APPROVED BY:
DocuSigned by: Carl Haddock
DIRECTOR OF HOUSTON PUBLIC WORKS

EFF DATE: NOV–27–2023	DWG NO: 01555–14

CITY OF HOUSTON
HOUSTON PUBLIC WORKS STANDARD

BARRICADE AND CHANNELIZING DEVICES

	FOR CITY OF HOUSTON USE ONLY
DRAWING SCALE	
NOT TO SCALE	

PAPE–DAWSON
2107 CITYWEST BLVD, 3RD FLR I HOUSTON, TX 77042 I 713.428.2400
TEXAS ENGINEERING FIRM #470 I TEXAS SURVEYING FIRM #10028800

PAPE–DAWSON
2107 CITYWEST BOULEVARD
3RD FLR
HOUSTON, TEXAS 77402
713–428–2400
TX FIRM #470

SURVEYED BY:
PAPE–DAWSON
FB NO. 24–018

THIS DOCUMENT IS RELEASED FOR INTERIM REVIEW UNDER THE AUTHORIZATION OF AMIRHOSSEIN SHOKOUHI, P.E. (#139835) AND IS **NOT TO BE USED FOR CONSTRUCTION.**

CITY OF HOUSTON
HOUSTON PUBLIC WORKS

LIFT STATION REHABILITATION AND RECONSTRUCTION
BEN'S BRANCH, WOODLAND RIDGE, ELMWOOD HILLS, FOREST SHORES, TRAIL RIVER, RIVERLAWN

BARRICADE AND CHANNELIZING DEVICES

WBS NUMBER	FOR CITY OF HOUSTON USE ONLY
R–000267–0180–3	
DRAWING SCALE	
AS NOTED	
CITY OF HOUSTON PM	
BRENDA JOHNSON P.E.	
SHEET NO. 040 OF 338	

TCP–02

NO.	DATE	REVISION	APP.

DISCLAIMER:
THE USE OF THIS STANDARD IS GOVERNED BY THE TEXAS ENGINEERING PRACTICE ACT. THE DESIGN REQUIREMENTS ON THIS STANDARD DO NOT PURPORT TO ADDRESS ALL OF THE SAFETY CONCERNS ASSOCIATED WITH THEIR USE. THE ENGINEER OF RECORD (EOR) IS TO REVIEW THESE DESIGN REQUIREMENTS AND BY AUTHORIZING THEIR USE, ACCEPTS RESPONSIBILITY FOR THEIR APPLICABILITY, ADEQUACY AND SAFETY. NO WARRANTY OF ANY KIND IS MADE BY THE CITY OF HOUSTON FOR ANY PURPOSES WHATSOEVER. THE CITY OF HOUSTON ASSUMES NO RESPONSIBILITY FOR INCORRECT RESULTS OR DAMAGES RESULTING FROM ITS USE.

FILE PATH: K:\Projects\423\77 COH LS Package\00\03 CADD\Plans\Sheets\02 Traffic Control And Survey\TCP–02 – BARRICADE AND CHANNELIZING DEVICE DETAILS.dwg

DocuSign Envelope ID: CB71C116-B716-4899-A5EE-0D2F2CC55AF6

A	D	I	J
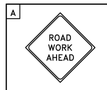	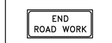		
CW20-1	G20-2	AHEAD CW20-5(2) CW16-3	AHEAD CW20-5(1) CW16-3

PHASE 1

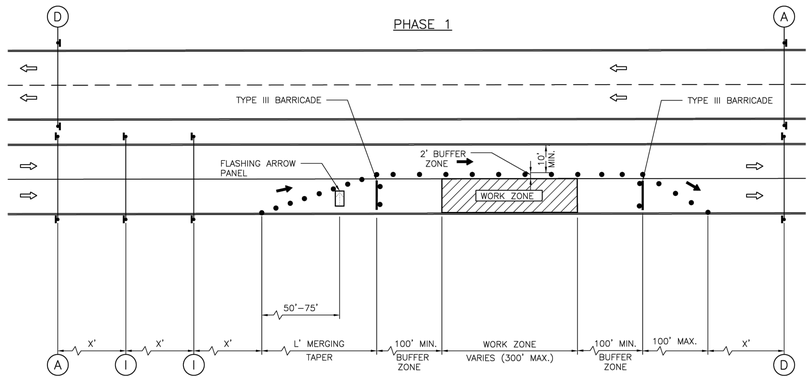

PHASE 2

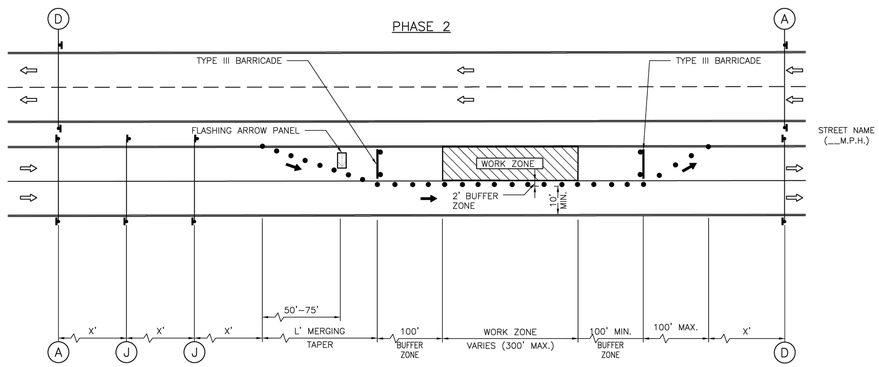

LEGEND:

- SIGN
- FLAGGER
- APPROVED CHANNELIZATION DEVICE
- BARRICADE
- FLASHING ARROW PANEL
- AREA UNDER CONSTRUCTION
- EXISTING TRAVEL WAY
- TRAFFIC CONTROL PLAN DETOUR TRAVEL WAY

NOTES:

1. RETURN TAPERS AND DOWNSTREAM BARRICADES ARE OPTIONAL ON A DIVIDED ROADWAY SECTION.
2. DOUBLE SIGNS SHALL BE USED ONLY ON ROADWAYS WITH MEDIANS.
3. FOR DIMENSIONS REFER TO SHEET 01555-01.
4. INSTALL FLASHERS ON DRUMS WHERE REQUIRED AND APPROVED BY CITY TRAFFIC ENGINEER.

APPROVED BY:	APPROVED BY:
DocuSigned by: Sulaiman Kanwar 80F8B0D6491847A...	DocuSigned by: HANG NGUYEN 85A3907DA7884CD...
CITY ENGINEER	CITY TRAFFIC ENGINEER
APPROVED BY: DocuSigned by: Carol Haddock A80C4160F2B0402...	
DIRECTOR OF HOUSTON PUBLIC WORKS	
EFF DATE: NOV-27-2023	DWG NO: 01555-04

CITY OF HOUSTON
HOUSTON PUBLIC WORKS STANDARD

TCP ONE LANE CLOSURE
PHASE 1 & 2

	FOR CITY OF HOUSTON USE ONLY
DRAWING SCALE	
NOT TO SCALE	

NO.	DATE	REVISION	APP.

PAPE-DAWSON
2107 CITYWEST BLVD, 3RD FLR I HOUSTON, TX 77042 I 713.428.2400
TEXAS ENGINEERING FIRM #470 I TEXAS SURVEYING FIRM #10028800

PAPE-DAWSON
2107 CITYWEST BOULEVARD
3RD FLR
HOUSTON, TEXAS 77402
713-428-2400
TX FIRM #470

SURVEYED BY:
PAPE-DAWSON
FB NO. 24-018

THIS DOCUMENT IS RELEASED FOR INTERIM REVIEW UNDER THE AUTHORIZATION OF AMIRHOSSEIN SHOKOUHI, P.E. (#139835) AND IS **NOT TO BE USED FOR CONSTRUCTION.**

CITY OF HOUSTON
HOUSTON PUBLIC WORKS

LIFT STATION REHABILITATION AND RECONSTRUCTION
BEN'S BRANCH, WOODLAND RIDGE, ELMWOOD HILLS, FOREST SHORES, TRAIL RIVER, RIVERLAWN

MISCELLANEOUS

TRAFFIC CONTROL PLAN ONE LANE CLOSURE

WBS NUMBER	FOR CITY OF HOUSTON USE ONLY
R-000267-0180-3	
DRAWING SCALE	
AS NOTED	
CITY OF HOUSTON PM	
BRENDA JOHNSON P.E.	
SHEET NO. 041 OF 338	

TCP-03

DISCLAIMER:
THE USE OF THIS STANDARD IS GOVERNED BY THE TEXAS ENGINEERING PRACTICE ACT. THE DESIGN REQUIREMENTS ON THIS STANDARD DO NOT PURPORT TO ADDRESS ALL OF THE SAFETY CONCERNS ASSOCIATED WITH THEIR USE. THE ENGINEER OF RECORD (EOR) IS TO REVIEW THESE DESIGN REQUIREMENTS AND BY AUTHORIZING THEIR USE, ACCEPTS RESPONSIBILITY FOR THEIR APPLICABILITY, ADEQUACY AND SAFETY. NO WARRANTY OF ANY KIND IS MADE BY THE CITY OF HOUSTON FOR ANY PURPOSES WHATSOEVER. THE CITY OF HOUSTON ASSUMES NO RESPONSIBILITY FOR INCORRECT RESULTS OR DAMAGES RESULTING FROM ITS USE.

FILE PATH: K:\Projects\423\77 COH LS Package\00\03 CADD\Plans\Sheets\02 Traffic Control And Survey\TCP-02 - ONE LANE CLOSURE.dwg

DocuSign Envelope ID: CB71C116-B716-4899-A5EE-0D2F2CC55AF6

A	B	C	D	E	F	G	H	I	J
ROAD WORK AHEAD	ROAD CLOSED AHEAD	DETOUR AHEAD	END ROAD WORK	STREET NAME DETOUR →	STREET NAME DETOUR ←	END DETOUR	STREET NAME DETOUR ↑	RIGHT LANE CLOSED AHEAD	LEFT LANE CLOSED AHEAD
CW20-1	CW20-3	CW20-2	G20-2	M4-9R	M4-9L	M4-8a	M4-9T	CW20-5(2) CW16-3	CW20-5(1) CW16-3

K	L	M	N	O	P	Q	R	
ONE WAY ←	ONE WAY →	DO NOT ENTER	ROAD CLOSED	CHANNELIZATION			BEGIN ONE WAY	
R6-2(L)	R6-2(R)	R5-1	R11-2	M4-10(L)	R3-1	R3-2	R6-6	

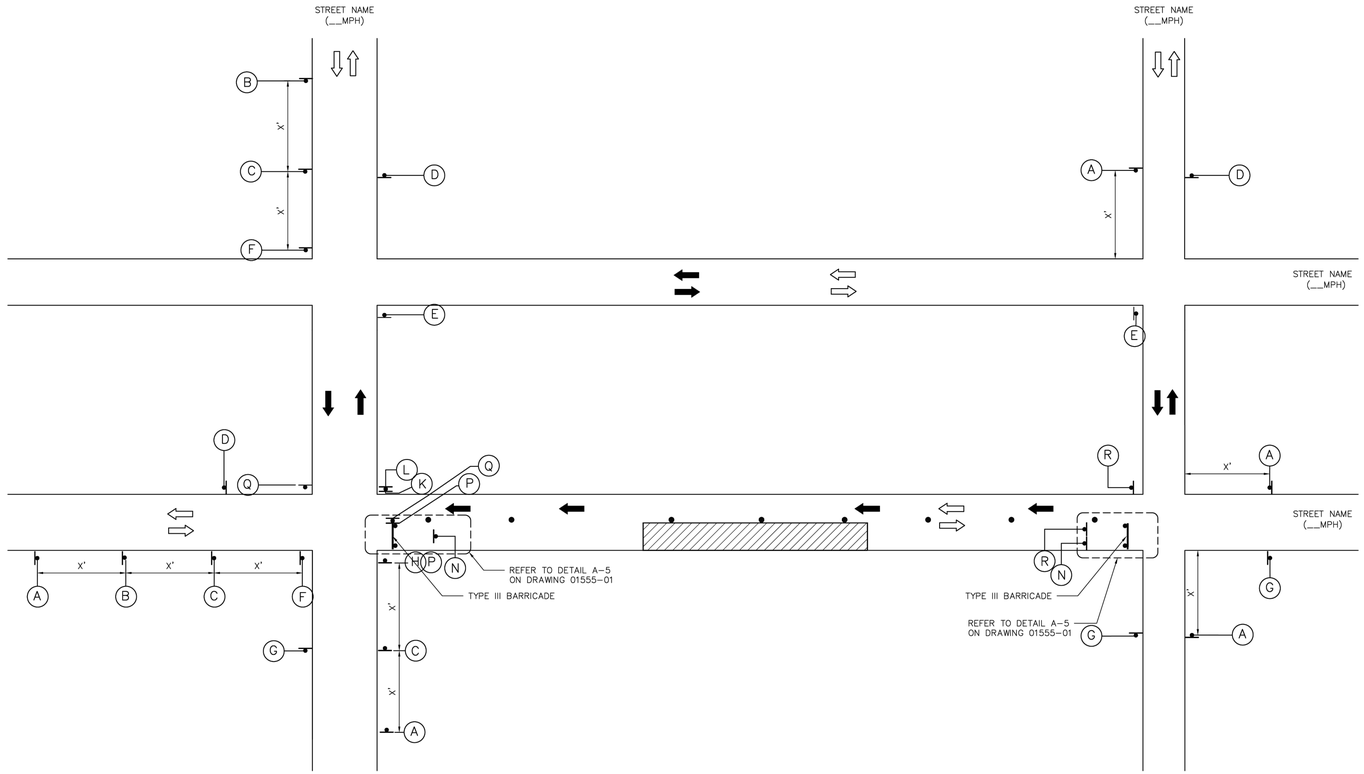

LEGEND:

- SIGN
- FLAGGER
- APPROVED CHANNELIZATION DEVICE
- BARRICADE
- FLASHING ARROW PANEL
- AREA UNDER CONSTRUCTION
- EXISTING TRAVEL WAY
- TRAFFIC CONTROL PLAN DETOUR TRAVEL WAY

NOTES:

1. A 10' MINIMUM LANE WIDTH FOR EMERGENCY SHALL BE MADE AVAILABLE AND MAINTAINED BY THE CONTRACTOR AT ALL TIMES.
2. FOR DIMENSIONS REFER TO SHEET 01555-01.
3. INSTALL FLASHERS ON DRUMS WHERE REQUIRED AND APPROVED BY CITY TRAFFIC ENGINEER.

NO.	DATE	REVISION	APP.

APPROVED BY:	APPROVED BY:
DocuSigned by: Sukail Bakshi	DocuSigned by: KHANG NGUYEN
CITY ENGINEER	CITY TRAFFIC ENGINEER
APPROVED BY: DocuSigned by: Carol Haddock	
DIRECTOR OF HOUSTON PUBLIC WORKS	
EFF DATE: NOV-27-2023	DWG NO: 01555-05

CITY OF HOUSTON
HOUSTON PUBLIC WORKS STANDARD

TCP TYPICAL DETOUR ROUTING WITH ONE LANE CLOSURE (ONE BLOCK)

FOR CITY OF HOUSTON USE ONLY

DRAWING SCALE
NOT TO SCALE

PAPE-DAWSON
2107 CITYWEST BLVD, 3RD FLR I HOUSTON, TX 77042 I 713.428.2400
TEXAS ENGINEERING FIRM #470 I TEXAS SURVEYING FIRM #10028800

PAPE-DAWSON
2107 CITYWEST BOULEVARD
3RD FLR
HOUSTON, TEXAS 77402
713-428-2400
TX FIRM #470

SURVEYED BY:
PAPE-DAWSON
FB NO. 24-018

THIS DOCUMENT IS RELEASED FOR INTERIM REVIEW UNDER THE AUTHORIZATION OF AMIRHOSSEIN SHOKOUHI, P.E. (#139835) AND IS **NOT TO BE USED FOR CONSTRUCTION.**

CITY OF HOUSTON
HOUSTON PUBLIC WORKS

LIFT STATION REHABILITATION AND RECONSTRUCTION
BEN'S BRANCH, WOODLAND RIDGE, ELMWOOD HILLS, FOREST SHORES, TRAIL RIVER, RIVERLAWN

MECHANICAL

TYPICAL DETOUR ROUTING ONE LANE CLOSURE (ONE BLOCK)

WBS NUMBER	FOR CITY OF HOUSTON USE ONLY
R-000267-0180-3	
DRAWING SCALE	
AS NOTED	
CITY OF HOUSTON PM	
BRENDA JOHNSON P.E.	
SHEET NO. 042 OF 338	

TCP-04

DISCLAIMER:
THE USE OF THIS STANDARD IS GOVERNED BY THE TEXAS ENGINEERING PRACTICE ACT. THE DESIGN REQUIREMENTS ON THIS STANDARD DO NOT PURPORT TO ADDRESS ALL OF THE SAFETY CONCERNS ASSOCIATED WITH THEIR USE. THE ENGINEER OF RECORD (EOR) IS TO REVIEW THESE DESIGN REQUIREMENTS AND BY AUTHORIZING THEIR USE, ACCEPTS RESPONSIBILITY FOR THEIR APPLICABILITY, ADEQUACY AND SAFETY; NO WARRANTY OF ANY KIND IS MADE BY THE CITY OF HOUSTON FOR ANY PURPOSES WHATSOEVER. THE CITY OF HOUSTON ASSUMES NO RESPONSIBILITY FOR INCORRECT RESULTS OR DAMAGES RESULTING FROM ITS USE.

FILE PATH: K:\Projects\423\77 COH LS Package\00\03 CADD\Plans\Sheets\02 Traffic Control And Survey\TCP-03 - TYPICAL DETOUR ROUTING WITH ONE LANE CLOSURE (ONE BLOCK).dwg

NOTES:

1. Illustrated utilities are based on found visible evidence. The location and depth of existing utilities should be field verified before construction. The surveyor does not have knowledge as to the availability of service to, or the status of the utilities on this site.
2. Elevations shown hereon are based on Harris County Floodplain Reference Mark No. 070325 located at the intersection of Redwood Bridge Trail and Hidden Lakes, being a brass disc stamped RM 070325, published elevation of 63.77 feet, NAVD 88, 2001 Adjustment.
3. This survey was performed in conjunction with the "Abstractors Certificate" issued by Texas American Title Company, File No. 2791025–00119, issued on January 9, 2025. See drawing for items which can be plotted. See said Abstractors Certificate for terms, conditions, and stipulations as set forth in restrictive covenants, and any other non–plottable encumbrances which are listed thereon, and affect this site.
4. Field work last updated 06/17/25.
5. The bearings for this survey are based on the Texas Coordinate System of 1983, South Central Zone from the North American Datum of 1983 (NA2011) epoch 2010.00.
6. 5/8" iron rod with cap marked "Pape–Dawson" set at subject property corners unless noted otherwise.

I hereby certify that this survey was made on the ground under my supervision and that it meets the minimum standards of practice as approved by the Texas Board of Professional Land Surveying.

_____
Jonathan Franz
Registration No: 6705
This 28th day of August 2025 A.D.

SYMBOL LEGEND	
LP	LAMP POST
GI	GRATE INLET
	ADVERTISING/ROAD/UTILITY SIGN WITH DESCRIPTION
	WATER METER
WV	WATER VALVE
UP	UTILITY POLE
SSMH	SANITARY SEWER MANHOLE
STM MH	STORM DRAIN MANHOLE
	GATE
	GAS METER
CPED	COMMUNICATION, TELEPHONE, CABLE PEDESTAL
EBOX	ELECTRIC BOX

LINE LEGEND	
// //	WOOD FENCE
P P P	OVERHEAD ELECTRIC
SAN	SANITARY SEWER LINE
STM	STORM SEWER LINE
	GAS LINE

DEED/PLAT REFERENCE

HCCF NO.	HARRIS COUNTY CLERK'S FILE NUMBER
HCDR	HARRIS COUNTY DEED RECORDS
HCMR	HARRIS COUNTY MAP RECORDS
FC NO.	FILM CODE NUMBER

BOUNDARY LINE
EXISTING EASEMENT LINE
ADJOINER LINE
APPROXIMATE FLOODPLAIN LINE
SET 5/8" I.R.(PD)
FOUND

LEGEND

CONC.	CONCRETE
EX.	EXISTING
FD.	FOUND
I.R.	IRON ROD
I.P.	IRON PIPE
(PD)	PAPE–DAWSON CAP
P.O.B.	POINT OF BEGINNING
PG.	PAGE
VOL.	VOLUME
FOC	FIBER OPTIC CABLE
T100.00	TOP OF CURB
G99.50	TOP OF GUTTER

CURVE TABLE					
CURVE	RADIUS	DELTA	CHORD BEARING	CHORD	LENGTH
C1	595.00'	4°59'24"	N46°13'58"W	51.80'	51.82'
C2	50.00'	36°52'10"	S57°57'03"E	31.62'	32.17'

TEMPORARY BENCHMARK DESCRIPTION

TBM-520 Cut "X" in Concrete Pad - Elevation 54.90'
TBM-521 Cut "X" in Curb Inlet - Elevation 53.43'

NO.	DATE	REVISION	APP.

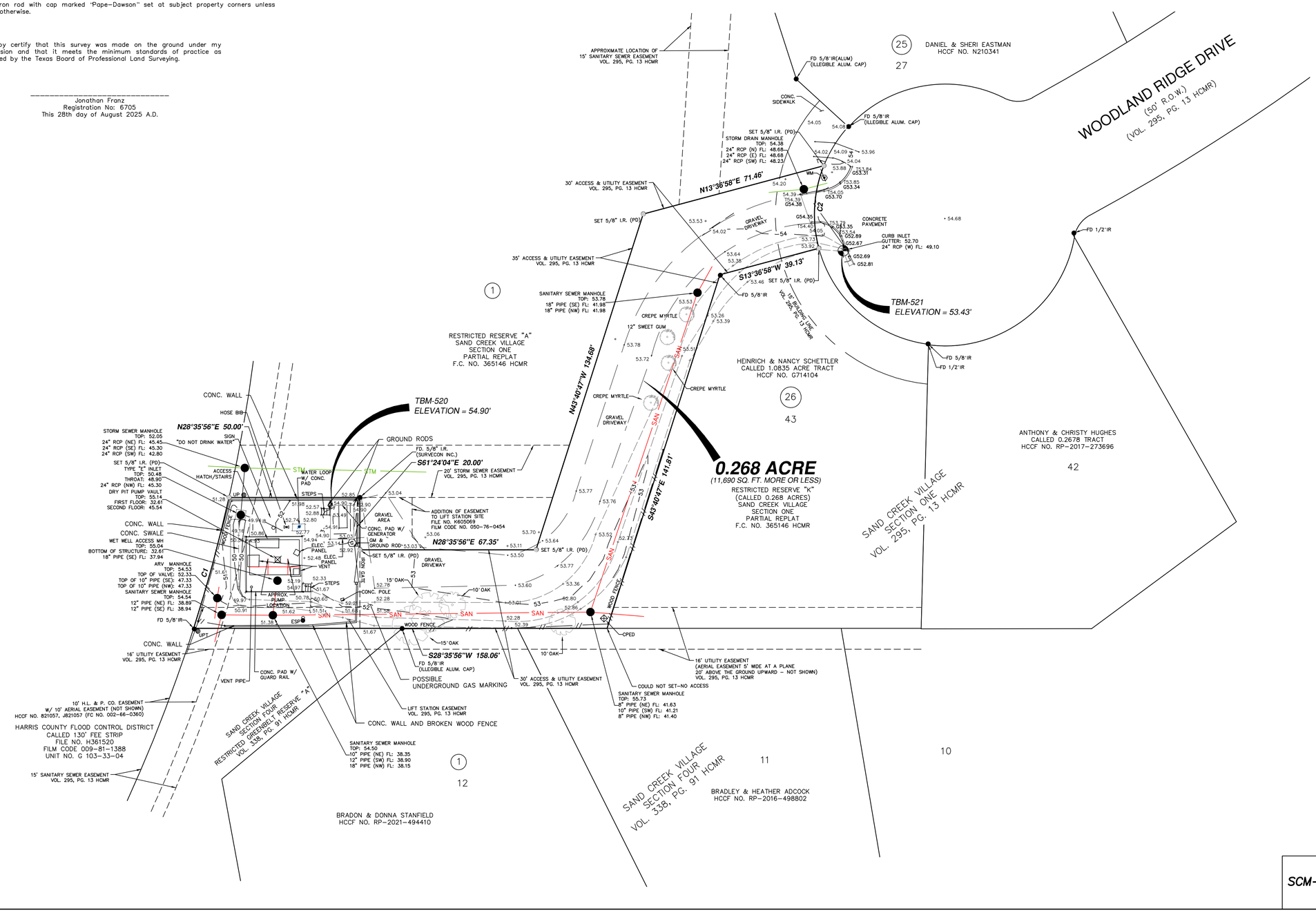

NOTICE:

FOR YOUR SAFETY, YOU ARE REQUIRED BY TEXAS LAW TO CALL 811 AT LEAST 48 HOURS BEFORE YOU DIG SO THAT UNDERGROUND LINES CAN BE MARKED. THIS SIGNATURE DOES NOT FULFILL YOUR OBLIGATION TO CALL 811

VERIFICATION OF PRIVATE UTILITY LINES

Date

CenterPoint Energy natural gas utilities shown. (Gas service lines are not shown). This signature not be used for conflict verification.

Signature valid for six months.

Date

CenterPoint Energy/UNDERGROUND Electrical Facilities Verification ONLY. (This signature verifies existing underground facilities – not to be used for conflict verification)

Signature valid for six months.

Date

Approved for AT&T underground conduit facilities only.
Signature valid for one year.

PAPE–DAWSON
2107 CITYWEST BLVD, 3RD FLR I HOUSTON, TX 77042 I 713.428.2400
TEXAS ENGINEERING FIRM #470 I TEXAS SURVEYING FIRM #10028800

PAPE–DAWSON
2107 CITYWEST BOULEVARD
3RD FLR
HOUSTON, TEXAS 77402
713–428–2400
TX FIRM #470

SURVEYED BY:
PAPE–DAWSON
FB NO. 24–018

THIS DOCUMENT IS RELEASED FOR INTERIM REVIEW UNDER THE AUTHORIZATION OF AMIRHOSSEIN SHOKOUHI, P.E. (#139835) AND IS **NOT TO BE USED FOR CONSTRUCTION.**

CITY OF HOUSTON
HOUSTON PUBLIC WORKS

LIFT STATION REHABILITATION AND RECONSTRUCTION
BEN'S BRANCH, WOODLAND RIDGE, ELMWOOD HILLS, FOREST SHORES, TRAIL RIVER, RIVERLAWN

CIVIL

WOODLAND RIDGE LIFT STATION SURVEY CONTROL MAP

WBS NUMBER	FOR CITY OF HOUSTON USE ONLY
R–000267–0180–3	
DRAWING SCALE	
AS NOTED	
CITY OF HOUSTON PM	
BRENDA JOHNSON P.E.	
SHEET NO. 043 OF 338	

SCM–01

FILE PATH: K:\Projects\423\77 COH LS Package\00\03 CADD\Plans\Sheets\02 Traffic Control And Survey\SCM–01 – WOODLAND RIDGE LIFT STATION SURVEY CONTROL MAP.dwg

NOTES:

1. Illustrated utilities are based on found visible evidence. The location and depth of existing utilities should be field verified before construction. The surveyor does not have knowledge as to the availability of service to, or the status of the utilities on this site.
2. Elevations shown hereon are based on Harris County Floodplain Reference Mark No. 070325 located at the intersection of Redwood Bridge Trail and Hidden Lakes, being a brass disc stamped RM 070325, published elevation of 63.77 feet, NAVD 88, 2001 Adjustment.
3. This survey was performed in conjunction with the "Abstractors Certificate" issued by Texas American Title Company, File No. 2791025–00177, issued on January 9. 2025. See drawing for items which can be plotted. See said Abstractors Certificate for terms, conditions, and stipulations as set forth in restrictive covenants, and any other non–plottable encumbrances which are listed thereon, and affect this site.
4. Field work last updated 06/17/25.
5. The bearings for this survey are based on the Texas Coordinate System of 1983, South Central Zone from the North American Datum of 1983 (NA2011) epoch 2010.00.
6. 5/8" iron rod with cap marked "Pape–Dawson" set at subject property corners unless noted otherwise.

I hereby certify that this survey was made on the ground under my supervision and that it meets the minimum standards of practice as approved by the Texas Board of Professional Land Surveying.

_____
Jonathan Franz
Registration No: 6705
This 28th day of August 2025 A.D.

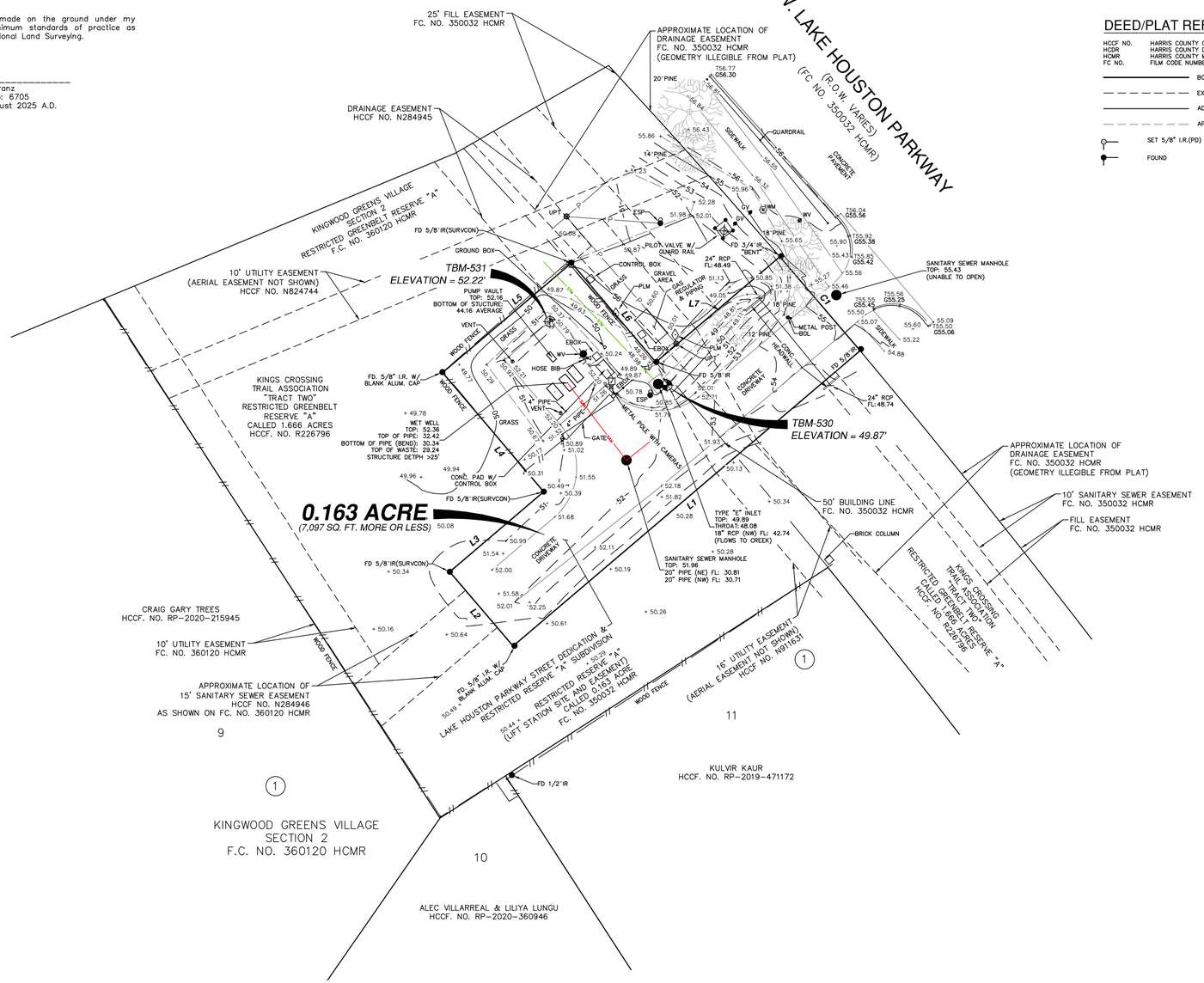

SYMBOL LEGEND	
LP	LAMP POST
GI	GRATE INLET
	ADVERTISING/ROAD/UTILITY SIGN WITH DESCRIPTION
	WATER METER
WV	WATER VALVE
UP	UTILITY POLE
SSMH	SANITARY SEWER MANHOLE
STM MH	STORM DRAIN MANHOLE
	GATE
	GAS METER
CPED	COMMUNICATION, TELEPHONE, CABLE PEDESTAL
EBOX	ELECTRIC BOX
	WATER METER
	GAS VALVE

LINE LEGEND	
// //	WOOD FENCE
P P P	OVERHEAD ELECTRIC
SAN	SANITARY SEWER LINE
STM	STORM SEWER LINE
	GAS LINE

DEED/PLAT REFERENCE

HCCF NO.	HARRIS COUNTY CLERK'S FILE NUMBER
HCDR	HARRIS COUNTY DEED RECORDS
HCMR	HARRIS COUNTY MAP RECORDS
FC NO.	FILM CODE NUMBER

BOUNDARY LINE
EXISTING EASEMENT LINE
ADJOINER LINE
APPROXIMATE FLOODPLAIN LINE
SET 5/8" I.R.(PD)
FOUND

LEGEND

CONC.	CONCRETE
EX.	EXISTING
FD.	FOUND
I.R.	IRON ROD
I.P.	IRON PIPE
(PD)	PAPE–DAWSON CAP
P.O.B.	POINT OF BEGINNING
PG.	PAGE
VOL.	VOLUME
FOC	FIBER OPTIC CABLE
T100.00	TOP OF CURB
G99.50	TOP OF GUTTER

TEMPORARY BENCHMARK DESCRIPTION

TBM-530 Cut "X" in Type "E" inlet - Elevation 49.87'
TBM-531 Cut "X" in Concrete Pad - Elevation 52.22'

NO.	DATE	REVISION	APP.

SCALE: 1"= 20'
0' 20' 40' 60'

NOTICE:

FOR YOUR SAFETY, YOU ARE REQUIRED BY TEXAS LAW TO CALL 811 AT LEAST 48 HOURS BEFORE YOU DIG SO THAT UNDERGROUND LINES CAN BE MARKED. THIS SIGNATURE DOES NOT FULFILL YOUR OBLIGATION TO CALL 811

VERIFICATION OF PRIVATE UTILITY LINES

Date

CenterPoint Energy natural gas utilities shown. (Gas service lines are not shown). This signature not be used for conflict verification.

Signature valid for six months.

Date

CenterPoint Energy/UNDERGROUND Electrical Facilities Verification ONLY. (This signature verifies existing underground facilities – not to be used for conflict verification)

Signature valid for six months.

Date

Approved for AT&T underground conduit facilities only.
Signature valid for one year.

PAPE–DAWSON
2107 CITYWEST BLVD, 3RD FLR I HOUSTON, TX 77042 I 713.428.2400
TEXAS ENGINEERING FIRM #470 I TEXAS SURVEYING FIRM #10028800

PAPE–DAWSON
2107 CITYWEST BOULEVARD
3RD FLR
HOUSTON, TEXAS 77402
713–428–2400
TX FIRM #470

SURVEYED BY:
PAPE–DAWSON
FB NO. 24–018

THIS DOCUMENT IS RELEASED FOR INTERIM REVIEW UNDER THE AUTHORIZATION OF AMIRHOSSEIN SHOKOUHI, P.E. (#139855) AND IS **NOT TO BE USED FOR CONSTRUCTION.**

CITY OF HOUSTON
HOUSTON PUBLIC WORKS

LIFT STATION REHABILITATION AND RECONSTRUCTION
BEN'S BRANCH, WOODLAND RIDGE, ELMWOOD HILLS, FOREST SHORES, TRAIL RIVER, RIVERLAWN

CIVIL

BENS BRANCH LIFT STATION SURVEY CONTROL MAP

WBS NUMBER	FOR CITY OF HOUSTON USE ONLY
R–000267–0180–3	
DRAWING SCALE	
AS NOTED	
CITY OF HOUSTON PM	
BRENDA JOHNSON P.E.	
SHEET NO. 044 OF 338	

SCM–02

FILE PATH: K:\Projects\423\77 COH LS Package\00\03 CADD\Plans\Sheets\02 Traffic Control And Survey\SCM–02 – BENS BRANCH LIFT STATION SURVEY CONTROL MAP.dwg

NOTES:

1. Illustrated utilities are based on found visible evidence. The location and depth of existing utilities should be field verified before construction. The surveyor does not have knowledge as to the availability of service to, or the status of the utilities on this site.
2. Elevations shown hereon are based on Harris County Floodplain Reference Mark No. 070325 located at the intersection of Redwood Bridge Trail and Hidden Lakes, being a brass disc stamped RM 070325, published elevation of 63.77 feet, NAVD 88, 2001 Adjustment.
3. This survey was performed in conjunction with the "Abstractors Certificate" issued by Texas American Title Company, File No. 2791025–00247, issued on January 13, 2025. See drawing for items which can be plotted. See said Abstractors Certificate for terms, conditions, and stipulations as set forth in restrictive covenants, and any other non–plottable encumbrances which are listed thereon, and affect this site.
4. Field work last updated 06/18/25.
5. The bearings for this survey are based on the Texas Coordinate System of 1983, South Central Zone from the North American Datum of 1983 (NA2011) epoch 2010.00.
6. 5/8" iron rod with cap marked "Pape–Dawson" set at subject property corners unless noted otherwise.

I hereby certify that this survey was made on the ground under my supervision and that it meets the minimum standards of practice as approved by the Texas Board of Professional Land Surveying.

_____
Jonathan Franz
Registration No: 6705
This 28th day of August 2025 A.D.

SYMBOL LEGEND		
☼ LP		LAMP POST
▦ GI		GRATE INLET
—o—		ADVERTISING/ROAD/UTILITY SIGN WITH DESCRIPTION
⊗		WATER METER
WV		WATER VALVE
UP		UTILITY POLE
SSMH		SANITARY SEWER MANHOLE
STM MH		STORM DRAIN MANHOLE
⟷		GATE
G		GAS METER
⊠ CPED		COMMUNICATION, TELEPHONE, CABLE PEDESTAL
□ EBOX		ELECTRIC BOX

LINE LEGEND	
//——//——	WOOD FENCE
P——P——P	OVERHEAD ELECTRIC
SAN	SANITARY SEWER LINE
STM	STORM SEWER LINE
— — —	GAS LINE

DEED/PLAT REFERENCE

HCCF NO.	HARRIS COUNTY CLERK'S FILE NUMBER
HCDR	HARRIS COUNTY DEED RECORDS
HCMR	HARRIS COUNTY MAP RECORDS
FC NO.	FILM CODE NUMBER

BOUNDARY LINE
EXISTING EASEMENT LINE
ADJOINER LINE
APPROXIMATE FLOODPLAIN LINE
SET 5/8" I.R.(PD)
FOUND

LEGEND

CONC.	CONCRETE
EX.	EXISTING
FD.	FOUND
I.R.	IRON ROD
I.P.	IRON PIPE
(PD)	PAPE–DAWSON CAP
P.O.B.	POINT OF BEGINNING
PG.	PAGE
VOL.	VOLUME
FOC	FIBER OPTIC CABLE
T100.00	TOP OF CURB
G99.50	TOP OF GUTTER

TEMPORARY BENCHMARK DESCRIPTION

TBM-540 Cut "X" in Concrete Sidewalk - Elevation 54.89'

TBM-541 Cut "X" in Concrete Pad - Elevation 53.24'

LINE TABLE		
LINE	BEARING	LENGTH
L1	N89°20'25"E	30.00'
L2	S00°39'35"E	30.00'
L3	S89°20'25"W	30.00'
L4	N00°39'35"W	30.00'

NO.	DATE	REVISION	APP.

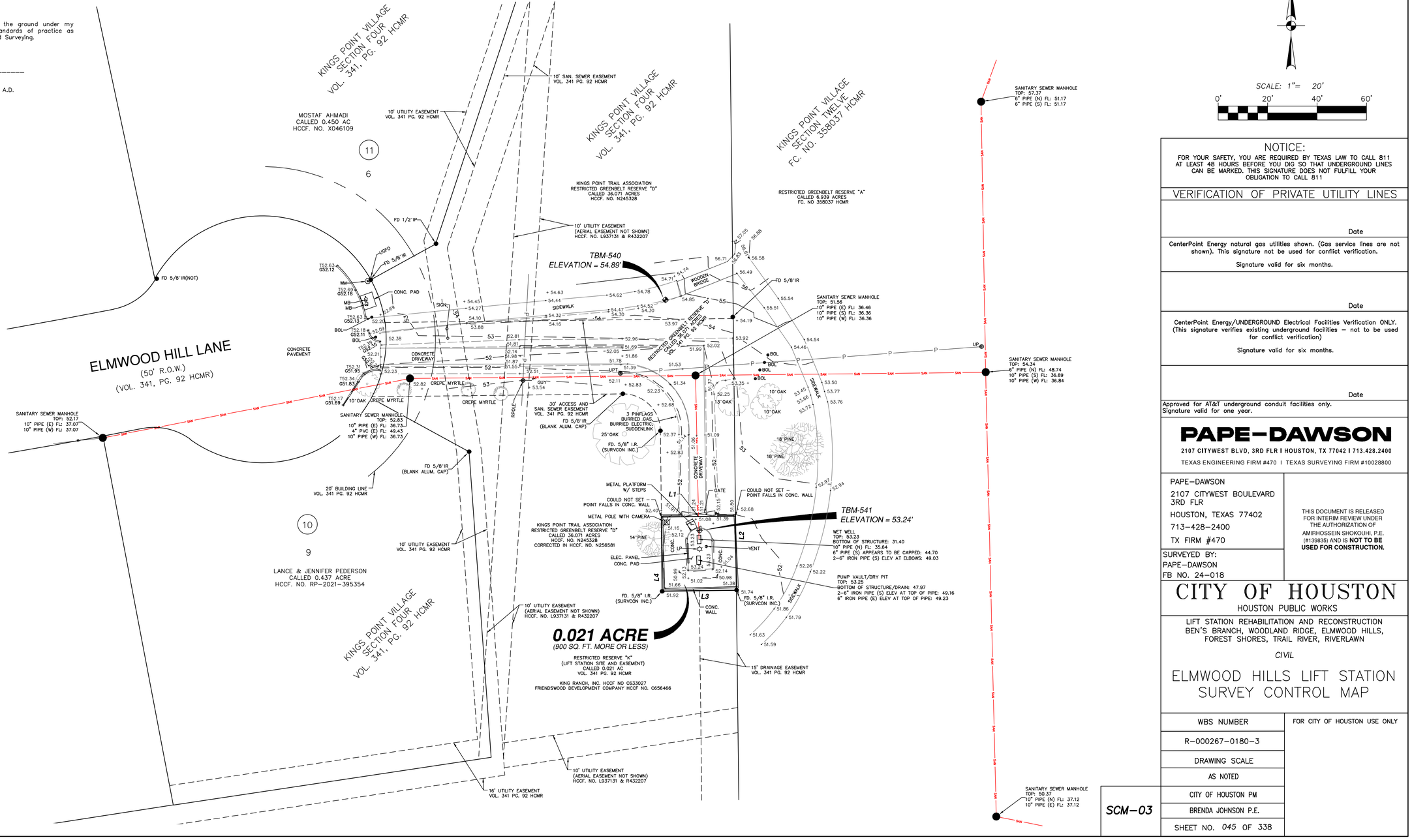

NOTICE:

FOR YOUR SAFETY, YOU ARE REQUIRED BY TEXAS LAW TO CALL 811 AT LEAST 48 HOURS BEFORE YOU DIG SO THAT UNDERGROUND LINES CAN BE MARKED. THIS SIGNATURE DOES NOT FULFILL YOUR OBLIGATION TO CALL 811

VERIFICATION OF PRIVATE UTILITY LINES

Date

CenterPoint Energy natural gas utilities shown. (Gas service lines are not shown). This signature not be used for conflict verification.

Signature valid for six months.

Date

CenterPoint Energy/UNDERGROUND Electrical Facilities Verification ONLY. (This signature verifies existing underground facilities – not to be used for conflict verification)

Signature valid for six months.

Date

Approved for AT&T underground conduit facilities only.
Signature valid for one year.

PAPE–DAWSON
2107 CITYWEST BLVD, 3RD FLR I HOUSTON, TX 77042 I 713.428.2400
TEXAS ENGINEERING FIRM #470 I TEXAS SURVEYING FIRM #10028800

PAPE–DAWSON
2107 CITYWEST BOULEVARD
3RD FLR
HOUSTON, TEXAS 77402
713–428–2400
TX FIRM #470

SURVEYED BY:
PAPE–DAWSON
FB NO. 24–018

THIS DOCUMENT IS RELEASED FOR INTERIM REVIEW UNDER THE AUTHORIZATION OF AMIRHOSSEIN SHOKOUHI, P.E. (#139835) AND IS **NOT TO BE USED FOR CONSTRUCTION.**

CITY OF HOUSTON
HOUSTON PUBLIC WORKS

LIFT STATION REHABILITATION AND RECONSTRUCTION
BEN'S BRANCH, WOODLAND RIDGE, ELMWOOD HILLS, FOREST SHORES, TRAIL RIVER, RIVERLAWN

CIVIL

ELMWOOD HILLS LIFT STATION SURVEY CONTROL MAP

WBS NUMBER	FOR CITY OF HOUSTON USE ONLY
R–000267–0180–3	
DRAWING SCALE	
AS NOTED	
CITY OF HOUSTON PM	
BRENDA JOHNSON P.E.	
SHEET NO. 045 OF 338	

SCM–03

FILE PATH: K:\Projects\423\77 COH LS Package\00\03 CADD\Plans\Sheets\02 Traffic Control And Survey\SCM–03 – ELMWOOD HILLS LIFT STATION SURVEY CONTROL MAP.dwg

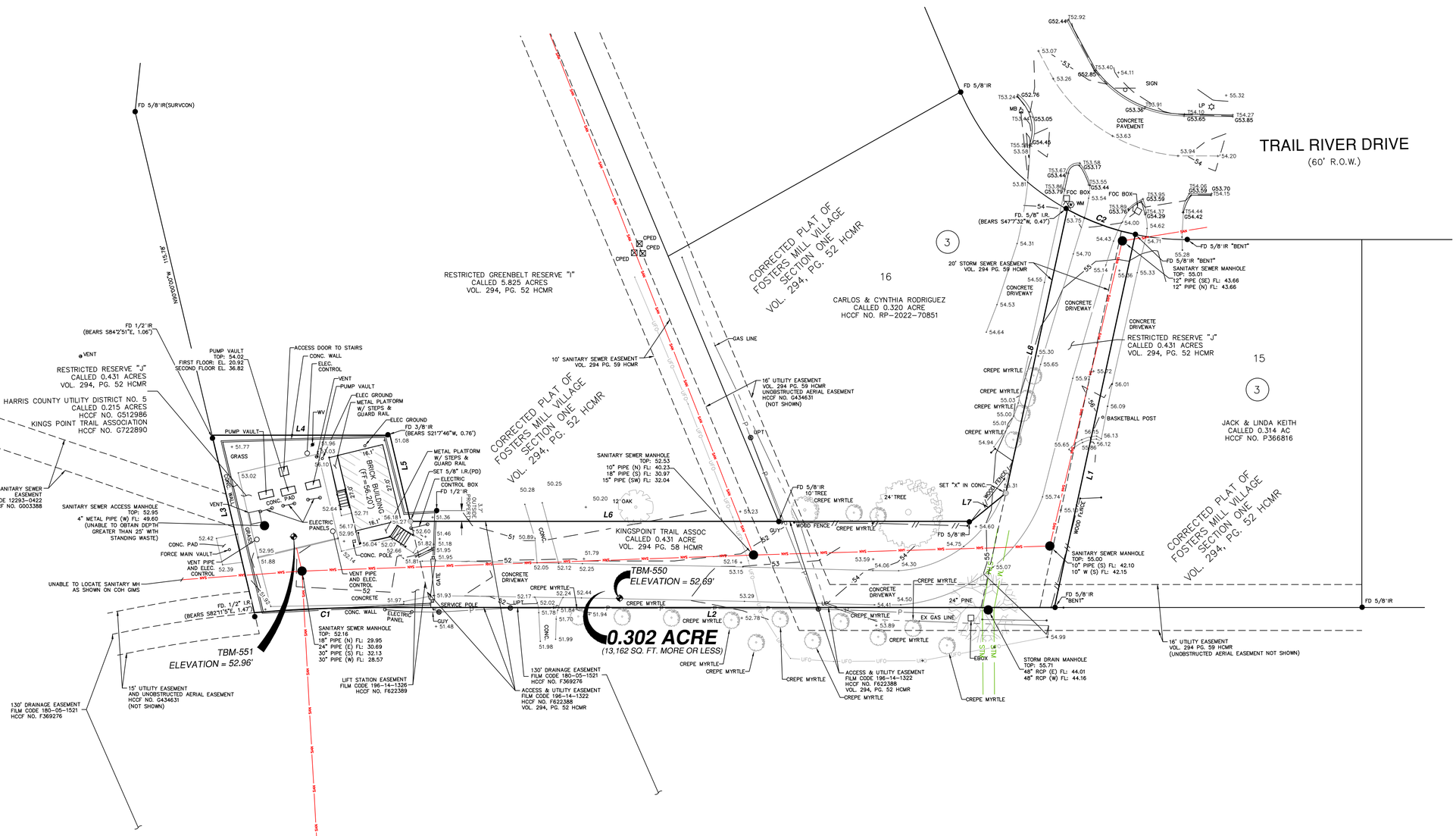

TEMPORARY BENCHMARK DESCRIPTION

TBM-550 Cut "X" in Concrete Driveway - Elevation 52.69'

TBM-551 Cut "X" in Concrete Pad - Elevation 52.96'

LEGEND

CONC	CONCRETE
EX.	EXISTING
FD.	FOUND
I.R.	IRON ROD
I.P.	IRON PIPE
(PD)	PAPE-DAWSON CAP
P.O.B.	POINT OF BEGINNING
PG.	PAGE
VOL.	VOLUME
FOC	FIBER OPTIC CABLE
T10C.00	TOP OF CURB
G99.50	TOP OF CUTTER

NO.	DATE	REVISION	APP.

SCALE: 1"= 20'

0' 20' 40' 60'

NOTICE:

FOR YOUR SAFETY, YOU ARE REQUIRED BY TEXAS LAW TO CALL 811 AT LEAST 48 HOURS BEFORE YOU DIG SO THAT UNDERGROUND LINES CAN BE MARKED. THIS SIGNATURE DOES NOT FULFILL YOUR OBLIGATION TO CALL 811

VERIFICATION OF PRIVATE UTILITY LINES

Date

CenterPoint Energy natural gas utilities shown. (Gas service lines are not shown). This signature not be used for conflict verification.

Signature valid for six months.

Date

CenterPoint Energy/UNDERGROUND Electrical Facilities Verification ONLY. (This signature verifies existing underground facilities – not to be used for conflict verification)

Signature valid for six months.

Date

Approved for AT&T underground conduit facilities only.
Signature valid for one year.

NOTES:

1. Illustrated utilities are based on found visible evidence. The location and depth of existing utilities should be field verified before construction. The surveyor does not have knowledge as to the availability of service to, or the status of the utilities on this site.
2. Elevations shown hereon are based on Harris County Floodplain Reference Mark No. 070325 located at the intersection of Redwood Bridge Trail and Hidden Lakes, being a brass disc stamped RM 070325, published elevation of 63.77 feet, NAVD 88, 2001 Adjustment.
3. This survey was performed in conjunction with the "Abstractors Certificate" issued by Texas American Title Company, File No. 2791025-00302, issued on January 14, 2025. See drawing for items which can be plotted. See said Abstractors Certificate for terms, conditions, and stipulations as set forth in restrictive covenants, and any other non-plottable encumbrances which are listed thereon, and affect this site.
4. Field work last updated 06/17/25.
5. The bearings for this survey are based on the Texas Coordinate System of 1983, South Central Zone from the North American Datum of 1983 (NA2011) epoch 2010.00.
6. 5/8" iron rod with cap marked "Pape-Dawson" set at subject property corners unless noted otherwise.

I hereby certify that this survey was made on the ground under my supervision and that it meets the minimum standards of practice as approved by the Texas Board of Professional Land Surveying.

Jonathan Franz
Registration No: 6705
This 28th day of August 2025 A.D.

DEED/PLAT REFERENCE

HCCF NO.	HARRIS COUNTY CLERK'S FILE NUMBER
HCDR	HARRIS COUNTY DEED RECORDS
HCMR	HARRIS COUNTY MAP RECORDS
FC NO.	FILM CODE NUMBER

BOUNDARY LINE
EXISTING EASEMENT LINE
ADJOINER LINE
APPROXIMATE FLOODPLAIN LINE
SET 5/8" I.R.(PD)
FOUND

SYMBOL	LEGEND
LP	LAMP POST
GI	GRATE INLET
	ADVERTISING/ROAD/UTILITY SIGN WITH DESCRIPTION
	WATER METER
WV	WATER VALVE
UP	UTILITY POLE
SSMH	SANITARY SEWER MANHOLE
STM MH	STORM DRAIN MANHOLE
	GATE
	GAS METER
CPED	COMMUNICATION, TELEPHONE, CABLE PEDESTAL
EBOX	ELECTRIC BOX

LINE TABLE		
LINE	BEARING	LENGTH
L1	S64°22'23"E	132.92'
L2	S13°24'05"W	238.60'
L3	N90°00'00"W	63.51'
L4	N13°24'05"E	61.97'
L5	N90°00'00"E	30.83'
L6	N13°24'05"E	195.35'
L7	N25°29'09"W	15.57'
L8	N64°22'23"W	101.13'

CURVE TABLE					
CURVE	RADIUS	DELTA	CHORD BEARING	CHORD	LENGTH
C1	455.00'	5°04'02"	S10°52'05"W	40.23'	40.24'
C2	85.00'	17°03'22"	N33°37'28"E	25.21'	25.30'

LINE LEGEND	
//——//	WOOD FENCE
P——P——P	OVERHEAD ELECTRIC
SAN	SANITARY SEWER LINE
STM	STORM SEWER LINE
	GAS LINE

PAPE-DAWSON
2107 CITYWEST BLVD, 3RD FLR I HOUSTON, TX 77042 I 713.428.2400
TEXAS ENGINEERING FIRM #470 I TEXAS SURVEYING FIRM #10028800

PAPE-DAWSON
2107 CITYWEST BOULEVARD
3RD FLR
HOUSTON, TEXAS 77402
713-428-2400
TX FIRM #470

SURVEYED BY:
PAPE-DAWSON
FB NO. 24-018

THIS DOCUMENT IS RELEASED FOR INTERIM REVIEW UNDER THE AUTHORIZATION OF AMIRHOSSEIN SHOKOUHI, P.E. (#139835) AND IS **NOT TO BE USED FOR CONSTRUCTION.**

CITY OF HOUSTON

HOUSTON PUBLIC WORKS

LIFT STATION REHABILITATION AND RECONSTRUCTION
BEN'S BRANCH, WOODLAND RIDGE, ELMWOOD HILLS, FOREST SHORES, TRAIL RIVER, RIVERLAWN

CIVIL

TRAIL RIVER LIFT STATION SURVEY CONTROL MAP

WBS NUMBER	FOR CITY OF HOUSTON USE ONLY
R-000267-0180-3	
DRAWING SCALE	
AS NOTED	
CITY OF HOUSTON PM	
BRENDA JOHNSON P.E.	
SHEET NO. 046 OF 338	

SCM-04

FILE PATH: K:\Projects\423\77 COH LS Package\00\03 CADD\Plans\Sheets\02 Traffic Control And Survey\SCM-04 - TRAIL RIVER LIFT STATION SURVEY CONTROL MAP.dwg

FILE PATH: K:\Projects\423\77 COH LS Package\00\03 CADD\Plans\Sheets\02 Traffic Control And Survey\SCM-05 - FOREST SHORES LIFT STATION SURVEY CONTROL MAP.dwg

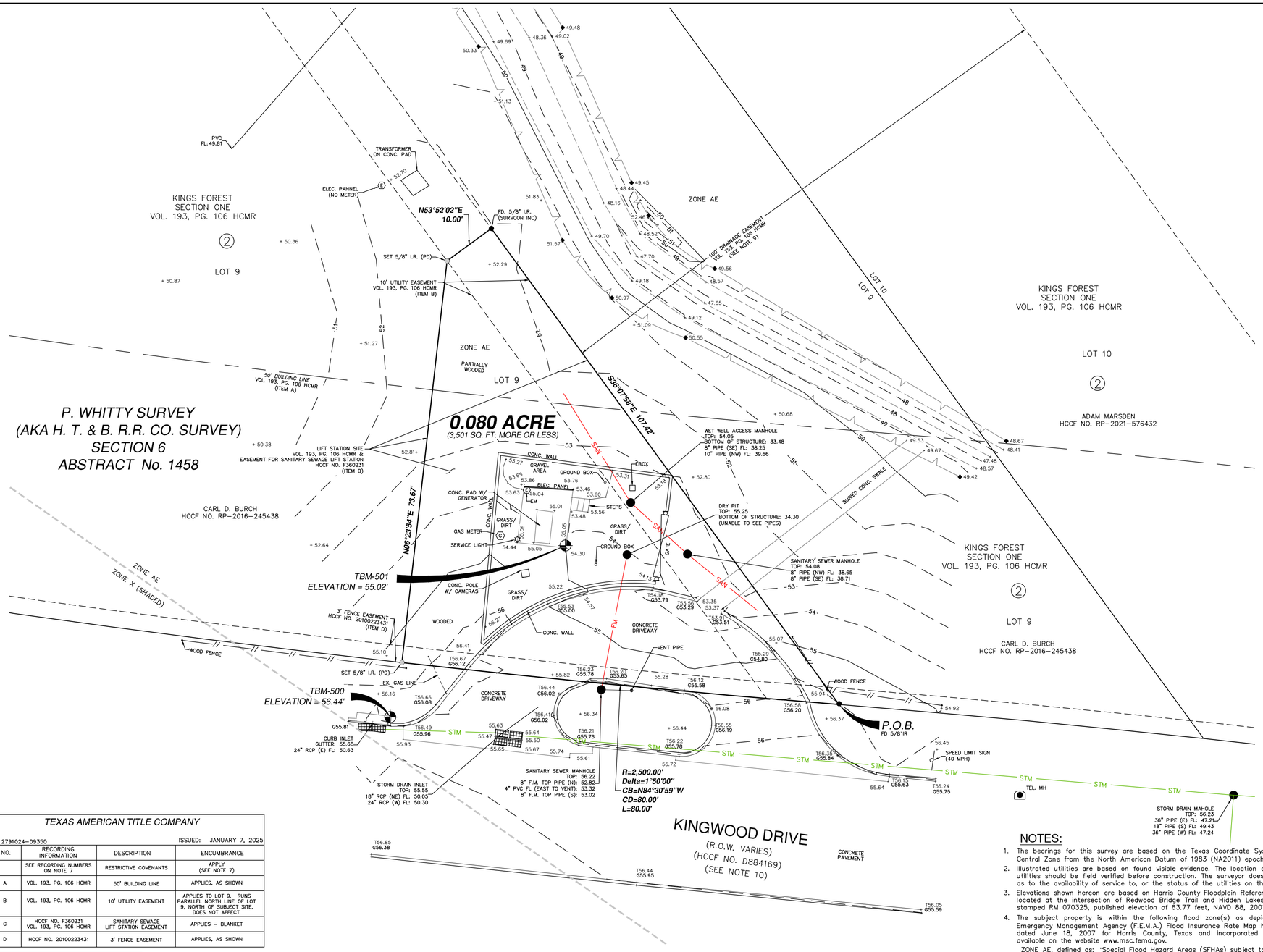

TEMPORARY BENCHMARK DESCRIPTION

TBM 500 CUT "X" IN CURB INLET - ELEVATION 56.44'

TBM 501 CUT "X" IN CONC. PAD - ELEVATION 55.02'

LEGEND

~~CONC.~~	~~CONCRETE~~
EX.	EXISTING
FD.	FOUND
I.R.	IRON ROD
I.P.	IRON PIPE
(PD)	PAPE-DAWSON CAP
P.O.B.	POINT OF BEGINNING
PG.	PAGE
VOL.	VOLUME
FOC	FIBER OPTIC CABLE
T100.00	TOP OF CURB
G99.50	TOP OF GUTTER

SCALE: 1"= 10'

0' 10' 20' 30'

NO.	DATE	REVISION	APP.

NOTICE:

FOR YOUR SAFETY, YOU ARE REQUIRED BY TEXAS LAW TO CALL 811 AT LEAST 48 HOURS BEFORE YOU DIG SO THAT UNDERGROUND LINES CAN BE MARKED. THIS SIGNATURE DOES NOT FULFILL YOUR OBLIGATION TO CALL 811

VERIFICATION OF PRIVATE UTILITY LINES

Date

CenterPoint Energy natural gas utilities shown. (Gas service lines are not shown). This signature not be used for conflict verification.

Signature valid for six months.

Date

CenterPoint Energy/UNDERGROUND Electrical Facilities Verification ONLY. (This signature verifies existing underground facilities – not to be used for conflict verification)

Signature valid for six months.

Date

Approved for AT&T underground conduit facilities only.
Signature valid for one year.

PAPE-DAWSON

2107 CITYWEST BLVD, 3RD FLR I HOUSTON, TX 77042 I 713.428.2400

TEXAS ENGINEERING FIRM #470 I TEXAS SURVEYING FIRM #10028800

PAPE-DAWSON
2107 CITYWEST BOULEVARD
3RD FLR
HOUSTON, TEXAS 77402
713-428-2400
TX FIRM #470

SURVEYED BY:
PAPE-DAWSON
FB NO. 24-018

THIS DOCUMENT IS RELEASED FOR INTERIM REVIEW UNDER THE AUTHORIZATION OF AMIRHOSSEIN SHOKOUHI, P.E. (#139835) AND IS **NOT TO BE USED FOR CONSTRUCTION.**

CITY OF HOUSTON

HOUSTON PUBLIC WORKS

LIFT STATION REHABILITATION AND RECONSTRUCTION
BEN'S BRANCH, WOODLAND RIDGE, ELMWOOD HILLS, FOREST SHORES, TRAIL RIVER, RIVERLAWN

CIVIL

FOREST SHORES LIFT STATION SURVEY CONTROL MAP

WBS NUMBER	FOR CITY OF HOUSTON USE ONLY
R-000267-0180-3	
DRAWING SCALE	
AS NOTED	
CITY OF HOUSTON PM	
BRENDA JOHNSON P.E.	
SHEET NO. 047 OF 338	

SCM-05

TEXAS AMERICAN TITLE COMPANY

FILE No. 2791024-09350 ISSUED: JANUARY 7, 2025

ITEM NO.	RECORDING INFORMATION	DESCRIPTION	ENCUMBRANCE
	SEE RECORDING NUMBERS ON NOTE 7	RESTRICTIVE COVENANTS	APPLY (SEE NOTE 7)
ITEM A	VOL. 193, PG. 106 HCMR	50' BUILDING LINE	APPLIES, AS SHOWN
ITEM B	VOL. 193, PG. 106 HCMR	10' UTILITY EASEMENT	APPLIES TO LOT 9. RUNS PARALLEL NORTH LINE OF LOT 9, NORTH OF SUBJECT SITE. DOES NOT AFFECT.
ITEM C	HCCF NO. F360231 VOL. 193, PG. 106 HCMR	SANITARY SEWAGE LIFT STATION EASEMENT	APPLIES – BLANKET
ITEM D	HCCF NO. 20100223431	3' FENCE EASEMENT	APPLIES, AS SHOWN

SYMBOL	LEGEND
LP	LAMP POST
GI	*GRATE INLET*
	ADVERTISING/ROAD/UTILITY SIGN WITH DESCRIPTION
	WATER METER
WV	WATER VALVE
UP	UTILITY POLE
SSMH	*SANITARY SEWER MANHOLE*
STM MH	*STORM DRAIN MANHOLE*
	GATE
G	*GAS METER*
CPED	*COMMUNICATION, TELEPHONE, CABLE PEDESTAL*
EBOX	*ELECTRIC BOX*

LINE	LEGEND
// //	*WOOD FENCE*
P P P	OVERHEAD ELECTRIC
SAN	SANITARY SEWER LINE
STM	STORM SEWER LINE
	GAS LINE

DEED/PLAT REFERENCE

HCCF NO.	HARRIS COUNTY CLERK'S FILE NUMBER
HCDR	HARRIS COUNTY DEED RECORDS
HCMR	HARRIS COUNTY MAP RECORDS
FC NO.	FILM CODE NUMBER

BOUNDARY LINE
EXISTING EASEMENT LINE
ADJOINER LINE
APPROXIMATE FLOODPLAIN LINE
SET 5/8" I.R.(PD)
FOUND

I hereby certify that this survey was made on the ground under my supervision and that it meets the minimum standards of practice as approved by the Texas Board of Professional Land Surveying.

Jonathan Franz
Registration No. 6705
This 28th day of August 2025 A.D.

NOTES:

1. The bearings for this survey are based on the Texas Coordinate System of 1983, South Central Zone from the North American Datum of 1983 (NA2011) epoch 2010.00.
2. Illustrated utilities are based on found visible evidence. The location and depth of existing utilities should be field verified before construction. The surveyor does not have knowledge as to the availability of service to, or the status of the utilities on this site.
3. Elevations shown hereon are based on Harris County Floodplain Reference Mark No. 070325 located at the intersection of Redwood Bridge Trail and Hidden Lakes, being a brass disc stamped RM 070325, published elevation of 63.77 feet, NAVD 88, 2001 Adjustment.
4. The subject property is within the following flood zone(s) as depicted on the Federal Emergency Management Agency (F.E.M.A.) Flood Insurance Rate Map Number 48201C0315L, dated June 18, 2007 for Harris County, Texas and incorporated areas. This data is available on the website www.msc.fema.gov.
   ZONE AE, defined as: "Special Flood Hazard Areas (SFHAs) subject to inundation by the 1% annual chance flood; Base flood elevations determined."
5. 5/8" iron rod with cap marked "Pape-Dawson" set at subject property corners unless noted otherwise.
6. This survey was performed in conjunction with the "City Planning Letter" issued by Texas American Title Company, File No. 2791024-09350, issued on January 7. 2025. (see chart shown hereon for specific items)
7. Subject to terms, conditions, and stipulations as set forth in restrictive covenants as recorded in Volume 193, Page 106 of the Harris County Map Records and HCCF No.s D693361, D699362, D711279, E767720, F586426, U148669, V827220, 20100145379, 20100145385, 20100347443, 20110405715, 20110547759, 20120085492, 20130530211, 20130530299, RP-2019-369197, RP-2020-362921, RP-2020-381156, RP-2021-493796, RP-2021-618748, RP-2021-655360, RP-2022-43157, RP-2022-266503 RP-2022-577264 and RP-2023-122846.
8. The surveyor did not research the mineral title of the subject property, nor any existing oil & gas leases which may affect the use of said property.
9. Per Note 6 of Kings Forest Section One plat, as recorded in Vol. 193, Pg. 106, "THIS EASEMENT SHALL BE KEPT CLEAR OF FENCES, BUILDINGS, PLANING, AND OTHER OBSTRUCTIONS TO THE OPERATIONS AND MAINTENANCE OF THE DRAINAGE FACILITY, AND ABUTTING PROPERTY SHALL NOT BE PERMITTED TO DRAIN INTO THIS EASEMENT EXCEPT BY MEANS OF AN APPROVED DRAINAGE STRUCTURE."
10. Per Note 5 of Kings Forest Section One plat, as recorded in Vol. 193, Pg. 106, "ALL LOTS SIDING OR BACKING ON WOODLAND HILLS DR. AND/OR KINGWOOD DR. SHALL NOT HAVE DIRECT DRIVEWAY ACCESS TO SAID STREETS."

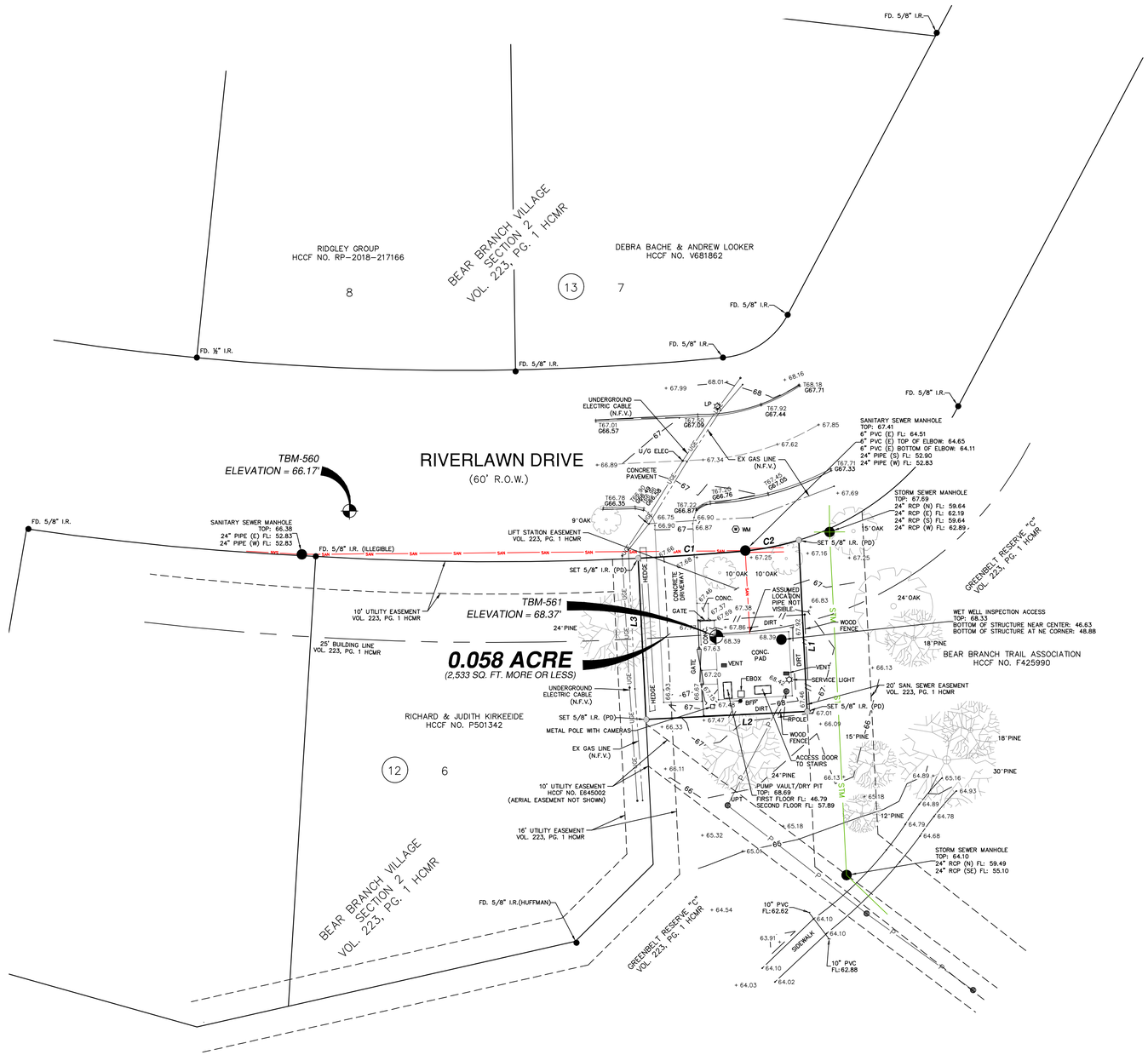

LINE TABLE		
LINE	BEARING	LENGTH
L1	S02°48'51"E	53.12'
L2	S87°11'09"W	50.00'
L3	N02°48'51"W	50.00'

CURVE TABLE					
CURVE	RADIUS	DELTA	CHORD BEARING	CHORD	LENGTH
C1	910.00'	2°00'01"	N86°11'01"E	31.77'	31.77'
C2	83.00'	12°44'21"	N79°10'23"E	18.42'	18.45'

DEED/PLAT REFERENCE

HCCF NO. HARRIS COUNTY CLERK'S FILE NUMBER
HCDR HARRIS COUNTY DEED RECORDS
HCMR HARRIS COUNTY MAP RECORDS
FC NO. FILM CODE NUMBER

BOUNDARY LINE
EXISTING EASEMENT LINE
ADJOINER LINE
APPROXIMATE FLOODPLAIN LINE
SET 5/8" I.R.(PD)
FOUND

SYMBOL LEGEND		
LP		LAMP POST
GI		GRATE INLET
		ADVERTISING/ROAD/UTILITY SIGN WITH DESCRIPTION
		WATER METER
WV		WATER VALVE
UP		UTILITY POLE
SSMH		SANITARY SEWER MANHOLE
STM MH		STORM DRAIN MANHOLE
		GATE
G		GAS METER
CPED		COMMUNICATION, TELEPHONE, CABLE PEDESTAL
EBOX		ELECTRIC BOX

LINE LEGEND	
	WOOD FENCE
P	OVERHEAD ELECTRIC
SAN	SANITARY SEWER LINE
STM	STORM SEWER LINE
	GAS LINE

NOTES:

1. Illustrated utilities are based on found visible evidence. The location and depth of existing utilities should be field verified before construction. The surveyor does not have knowledge as to the availability of service to, or the status of the utilities on this site.
2. Elevations shown hereon are based on Harris County Floodplain Reference Mark No. 070325 located at the intersection of Redwood Bridge Trail and Hidden Lakes, being a brass disc stamped RM 070325, published elevation of 63.77 feet, NAVD 88, 2001 Adjustment.
3. This survey was performed in conjunction with the "Abstractors Certificate" issued by Texas American Title Company, File No. 2791025-00354, issued on January 16, 2025. See drawing for items which can be plotted. See said Abstractors Certificate for terms, conditions, and stipulations as set forth in restrictive covenants, and any other non-plottable encumbrances which are listed thereon, and affect this site.
4. Field work last updated 06/18/25.
5. The bearings for this survey are based on the Texas Coordinate System of 1983, South Central Zone from the North American Datum of 1983 (NA2011) epoch 2010.00.
6. 5/8" iron rod with cap marked "Pape-Dawson" set at subject property corners unless noted otherwise.

I hereby certify that this survey was made on the ground under my supervision and that it meets the minimum standards of practice as approved by the Texas Board of Professional Land Surveying.

_____
Jonathan Franz
Registration No: 6705
This 28th day of August 2025 A.D.

TEMPORARY BENCHMARK DESCRIPTION

TBM-560 Cut "X" in Concrete Inlet Top - Elevation 66.17'

TBM-561 Cut "X" in Concrete Pad - Elevation 68.37'

LEGEND

CONC.	CONCRETE
EX.	EXISTING
FD.	FOUND
I.R.	IRON ROD
I.P.	IRON PIPE
(PD)	PAPE-DAWSON CAP
P.O.B.	POINT OF BEGINNING
PG.	PAGE
VOL.	VOLUME
FOC	FIBER OPTIC CABLE
T100.00	TOP OF CURB
G99.50	TOP OF GUTTER

NO.	DATE	REVISION	APP.

SCALE: 1"= 20'

0' 20' 40' 60'

NOTICE:
FOR YOUR SAFETY, YOU ARE REQUIRED BY TEXAS LAW TO CALL 811 AT LEAST 48 HOURS BEFORE YOU DIG SO THAT UNDERGROUND LINES CAN BE MARKED. THIS SIGNATURE DOES NOT FULFILL YOUR OBLIGATION TO CALL 811

VERIFICATION OF PRIVATE UTILITY LINES

Date

CenterPoint Energy natural gas utilities shown. (Gas service lines are not shown). This signature not be used for conflict verification.

Signature valid for six months.

Date

CenterPoint Energy/UNDERGROUND Electrical Facilities Verification ONLY. (This signature verifies existing underground facilities – not to be used for conflict verification)

Signature valid for six months.

Date

Approved for AT&T underground conduit facilities only.
Signature valid for one year.

PAPE-DAWSON
2107 CITYWEST BLVD, 3RD FLR I HOUSTON, TX 77042 I 713.428.2400
TEXAS ENGINEERING FIRM #470 I TEXAS SURVEYING FIRM #10028800

PAPE-DAWSON
2107 CITYWEST BOULEVARD
3RD FLR
HOUSTON, TEXAS 77402
713-428-2400
TX FIRM #470

SURVEYED BY:
PAPE-DAWSON
FB NO. 24-018

THIS DOCUMENT IS RELEASED FOR INTERIM REVIEW UNDER THE AUTHORIZATION OF AMIRHOSSEIN SHOKOUHI, P.E. (#139835) AND IS **NOT TO BE USED FOR CONSTRUCTION.**

CITY OF HOUSTON
HOUSTON PUBLIC WORKS

LIFT STATION REHABILITATION AND RECONSTRUCTION
BEN'S BRANCH, WOODLAND RIDGE, ELMWOOD HILLS, FOREST SHORES, TRAIL RIVER, RIVERLAWN

CIVIL

RIVERLAWN LIFT STATION SURVEY CONTROL MAP

WBS NUMBER	FOR CITY OF HOUSTON USE ONLY
R-000267-0180-3	
DRAWING SCALE	
AS NOTED	
CITY OF HOUSTON PM	
BRENDA JOHNSON P.E.	
SHEET NO. 048 OF 338	

SCM-06

FILE PATH: K:\Projects\423\77 COH LS Package\00\03 CADD\Plans\Sheets\02 Traffic Control And Survey\SCM-06 - RIVERLAWN LIFT STATION SURVEY CONTROL MAP.dwg

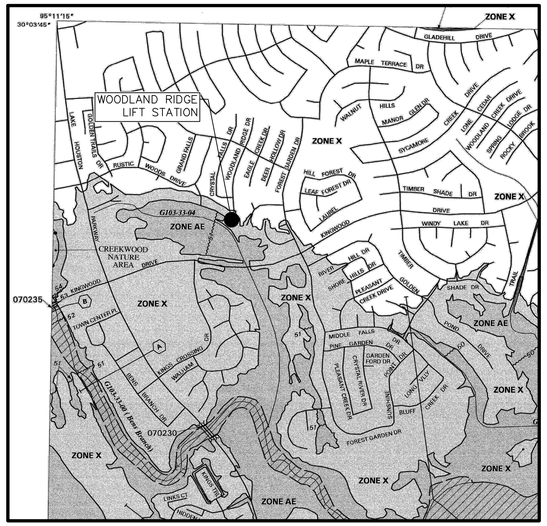

WOODLAND RIDGE
NTS

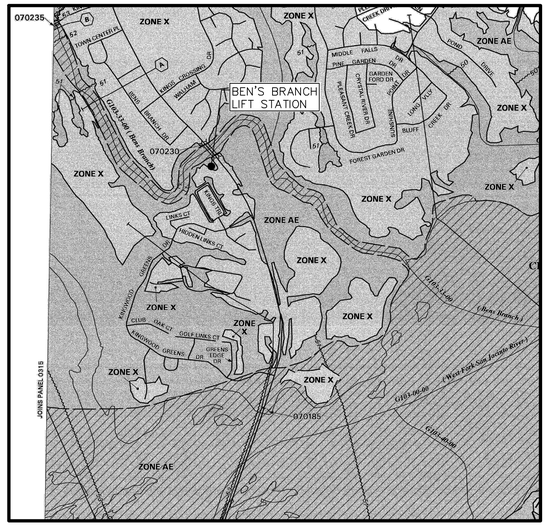

BEN'S BRANCH
NTS

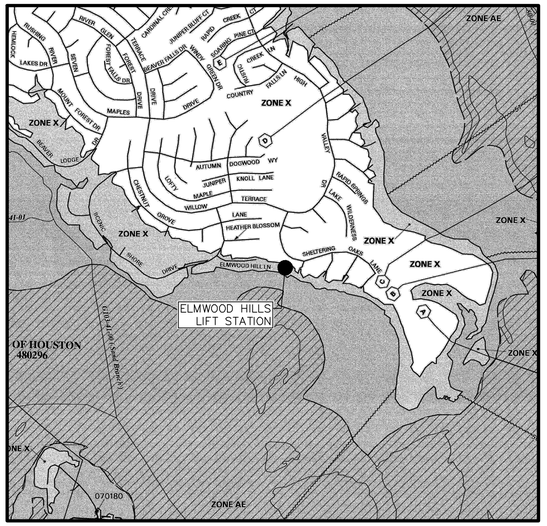

ELMWOOD HILLS
NTS

NOTE:

1. REFER TO INDIVIDUAL LIFT STATIONS CONSTRUCTION DRAWINGS FOR FEMA AND SITE ELEVATIONS.

LEGEND

SPECIAL FLOOD HAZARD AREAS SUBJECT TO INUNDATION BY THE 1% ANNUAL CHANCE FLOOD EVENT

The 1% annual chance flood (100-year flood), also known as the base flood, is the flood that has a 1% chance of being equaled or exceeded in any given year. The Special Flood Hazard Area is the area subject to flooding by the 1% annual chance flood. Areas of Special Flood Hazard include Zones A, AE, AH, AO, AR, A99, V, and VE. The Base Flood Elevation is the water surface elevation of the 1% annual chance flood.

- **ZONE A** — No base flood elevations determined.
- **ZONE AE** — Base flood elevations determined.
- **ZONE AH** — Flood depths of 1 to 3 feet (usually areas of ponding); base flood elevations determined.
- **ZONE AO** — Flood depths of 1 to 3 feet (usually sheet flow on sloping terrain); average depths determined. For areas of alluvial fan flooding, velocities also determined.
- **ZONE AR** — Area of special flood hazard formerly protected from the 1% annual chance flood event by a flood control system that was subsequently decertified. Zone AR indicates that the former flood control system is being restored to provide protection from the 1% annual chance or greater flood event.
- **ZONE A99** — Area to be protected from 1% annual chance flood event by a Federal flood protection system under construction; no base flood elevations determined.
- **ZONE V** — Coastal flood zone with velocity hazard (wave action); no base flood elevations determined.
- **ZONE VE** — Coastal flood zone with velocity hazard (wave action); base flood elevations determined.

FLOODWAY AREAS IN ZONE AE

The floodway is the channel of a stream plus any adjacent floodplain areas that must be kept free of encroachment so that the 1% annual chance flood can be carried without substantial increases in flood heights.

OTHER FLOOD AREAS

- **ZONE X** — Areas of 0.2% annual chance flood; areas of 1% annual chance flood with average depths of less than 1 foot or with drainage areas less than 1 square mile; and areas protected by levees from 1% annual chance flood.

OTHER AREAS

- **ZONE X** — Areas determined to be outside the 0.2% annual chance floodplain.
- **ZONE D** — Areas in which flood hazards are undetermined, but possible.

COASTAL BARRIER RESOURCES SYSTEM (CBRS) AREAS

OTHERWISE PROTECTED AREAS (OPAs)

CBRS areas and OPAs are normally located within or adjacent to Special Flood Hazard Areas.

- Floodplain boundary
- Floodway boundary
- Zone D boundary
- CBRS and OPA boundary
- Boundary dividing Special Flood Hazard Areas of different Base Flood Elevations, flood depths or velocities.
- 513 — Base Flood Elevation line and value; elevation in feet*
- (EL 987) — Base Flood Elevation value where uniform within zone; elevation in feet*

*Referenced to the North American Vertical Datum of 1988

- A — A — Cross Section Line
- 23 — 23 — Transect Line
- 97°07'30", 32°22'30" — Geographic coordinates referenced to the North American Datum of 1983 (NAD 83)
- 4276000M — 1000-meter Universal Transverse Mercator grid values, zone 15
- 600000 FT — 5000-foot grid ticks
- DX5510 — Bench mark (see explanation in Notes to Users section of this FIRM panel).
- M1.5 — River Mile

NO.	DATE	REVISION	APP.

SUMMARY TABLE

LIFT STATION NAME	ADDRESS	FEMA FIRM NO.	FLOOD PLAIN ZONE
WOODLAND RIDGE	2603 WOODLAND RIDGE DR.	48201C0320L	SHADED ZONE X
BEN'S BVRANCH	2423 W. LAKE HOUSTON PKWY	4802960320L	ZONE AE
ELMWOOD HILLS	5938 ELMWOOD HILL LN	48201C0320L	SHADED ZONE X
TRAIL RIVER	2100 TRAIL RIVER DRIVE	48201C0320L	SHADED ZONE X
FOREST SHORES	2714 ROYAL CIRCLE	48201C0315L	ZONE AE
RIVERLAWN	3326 RIVERLAWN DR	48201C0315L	ZONE X

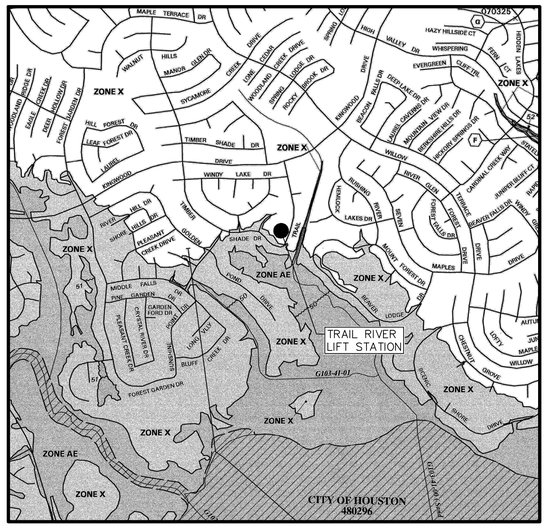

TRAIL RIVER
NTS

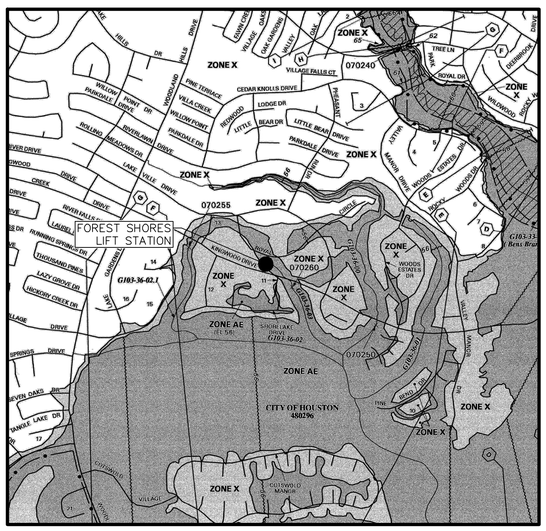

FOREST SHORES
NTS

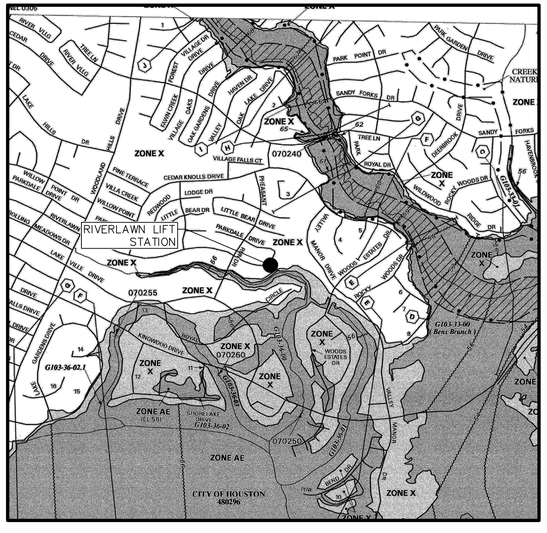

RIVERLAWN
NTS

PAPE-DAWSON
2107 CITYWEST BLVD, 3RD FLR I HOUSTON, TX 77042 I 713.428.2400
TEXAS ENGINEERING FIRM #470 I TEXAS SURVEYING FIRM #10028800

PAPE-DAWSON
2107 CITYWEST BOULEVARD
3RD FLR
HOUSTON, TEXAS 77402
713-428-2400
TX FIRM #470

SURVEYED BY:
PAPE-DAWSON
FB NO. 24-018

THIS DOCUMENT IS RELEASED FOR INTERIM REVIEW UNDER THE AUTHORIZATION OF AMIRHOSSEIN SHOKOUHI, P.E. (#139835) AND IS **NOT TO BE USED FOR CONSTRUCTION.**

CITY OF HOUSTON
HOUSTON PUBLIC WORKS

LIFT STATION REHABILITATION AND RECONSTRUCTION
BEN'S BRANCH, WOODLAND RIDGE, ELMWOOD HILLS, FOREST SHORES, TRAIL RIVER, RIVERLAWN

~~MECHANICAL~~

FLOOD PLAIN MAPS

WBS NUMBER	FOR CITY OF HOUSTON USE ONLY
R-000267-0180-3	
DRAWING SCALE	
AS NOTED	
CITY OF HOUSTON PM	
BRENDA JOHNSON P.E.	
SHEET NO. 049 OF 338	

FL-01

FILE PATH: K:\Projects\423\77 COH LS Package\00\03 CADD\Plans\Sheets\02 Traffic Control And Survey\FL-01 - FLOOD PLAIN MAPS.dwg

RESTRICTED RESERVE "A"
SAND CREEK VILLAGE
SECTION ONE
PARTIAL REPLAT
F.C. NO. 365146 HCMR

ADDITIONAL LS ESMT

EXST DIESEL GENERATOR W/ CONC. PAD

LS BOUNDARY

TBM-521

20' STM SWR ESMT

EXST CONC. STAIRS

EXST 24" RCP STM SWR

15' SSE

10' H.L. & P CO. ESMT

EXST GAS METER

EXST 15' GRAVEL ROAD

EXST 14' DOUBLE SWING GATE

EXST 3" NATURAL GAS LINE

EXST ELEC. BOX

EXST GENERATOR CONTROL PANEL

16' UE

EXST NON POTABLE BACKFLOW PREVENTOR W/ HOT BOX

LS ESMT

EXST HOSE BIBB

EXST 10" VCP SAN SWR @ 0.28% SLOPE

EXST UTILITY POLE

LS BOUNDARY

EXST DRY PIT VENT (TYP 2)

EXST CONC. FENCE (APPROX. 204 LF)

EXST CONC. POLE W/ CAMERAS

EXST DRY PIT ACCESS HATCH

EXST GRASS AREA (APPROX 1,711 SQ FT)

EXST TYPE "C" MH
RIM EL = 52.05'
24" RCP (NE) FL = 45.45'
24" RCP (SE) FL = 45.23'
24" RCP (SW) FL = 42.80'

EXST CONC. STAIRS

BRADON & DONNA STANFIELD
HCCF NO. RP-2021-494410

EXST ELEC. SERVICE POLE

EXST WET WELL (APPROX. 19'X4')

EXST 24" RCP STM SWR

EXST 18" RCP FL = 37.94'

EXST 18" RCP SAN SWR @ 0.09% SLOPE

EXST TYPE "E" STM INLET
GRATE EL = 50.48'
THROAT EL = 48.90'
24" RCP (NW) FL = 45.30'

EXST CONC DRAINAGE SWALE (APPROX 357 SQ FT)

LS BOUNDARY

EXST 4' SAN SWR MH
RIM EL = 54.50'
10" (NE) FL = 38.35'
12" (SW) FL = 38.90'
18" (NW) FL = 38.15'

EXST 12" VENT

EXST DRY PIT (APPROX. 19'X13.5')

EXST 12" VCP SAN SWR @ 0.22% SLOPE

EXST 10" CI FM

HARRIS COUNTY FLOOD CONTROL DISTRICT
CALLED 5.78999 TRACT
F.C. NO. 154-08-2279
H.C.M.R.

EXST AIR RELEASE MH
RIM EL = 52.33'
10" (NW) FL = 47.33'
10" (SE) FL = 47.33'

EXST 4' SAN SWR MH
RIM EL = 54.54'
12" (NE) FL = 38.89'
12" (SE) FL = 38.94'

LS BOUNDARY

EXST 12" SAN SWR @ 0.22% SLOPE

EXST 10" PVC FM

SAND CREEK VILLAGE
SECTION FOUR
RESTRICTED GREENBELT RESERVE "A"
VOL. 338, PG. 91 HCMR

EXST UTILITY POLE

NOTE:

1. THIS SITE PLAN WAS DEVELOPED FROM ORIGINAL CONSTRUCTION DRAWINGS, RECENT TOPOGRAPHICAL SURVEY, AND FIELD OBSERVATIONS. SOME BURIED ITEMS MAY EXIST ELSEWHERE, THEREFORE THE CONTRACTOR MUST FIELD VERIFY ALL UTLITIES AND STRUCTURES PRIOR TO CONSTRUCTION. SUBSURFACE ELECTRICAL ITEMS ARE SHOWN ON THE ELECTRICAL SITE PLAN (SEE SHEET __)
2. SEE PROPERTY BOUNDARY COORDINATES SHEET WR-C-03.
3. CONTRACTOR TO RE-ESTABLISH TBMS PRIOR TO DEMOLITION FOR ELEVATION CONTROL.

TEMPORARY BENCHMARK DESCRIPTION
TBM-520 CUT "X" IN CURB INLET - ELEVATION 53.43'
TBM-521 CUT "X" IN CONCRETE PAD - ELEVATION 54.90'

LEGEND

- DRAINAGE DIRECTION
- FLOW DIRECTION
- EXISTING GRAVEL
- EXISTING GRASS AREA

SCALE: 1"= 5'
0' 5' 10' 15'

NO.	DATE	REVISION	APP.

SUMMARY TABLE	
LIFT STATION NAME	WOODLAND RIDGE
LIFT STATION NUMBER	502
ADDRESS	2603 WOODLAND RIDGE
KEY MAP	337B

FLOODPLAIN TABLE	
FREQUENCY	WATER SURFACE ELEVATION, FT
500-YR	55.0'
100-YR	50.5'
HARVEY	59.5'

NOTICE:
FOR YOUR SAFETY, YOU ARE REQUIRED BY TEXAS LAW TO CALL 811 AT LEAST 48 HOURS BEFORE YOU DIG SO THAT UNDERGROUND LINES CAN BE MARKED. THIS SIGNATURE DOES NOT FULFILL YOUR OBLIGATION TO CALL 811

VERIFICATION OF PRIVATE UTILITY LINES

Date

CenterPoint Energy natural gas utilities shown. (Gas service lines are not shown). This signature not be used for conflict verification.

Signature valid for six months.

Date

CenterPoint Energy/UNDERGROUND Electrical Facilities Verification ONLY. (This signature verifies existing underground facilities - not to be used for conflict verification)

Signature valid for six months.

Date

Approved for AT&T underground conduit facilities only.
Signature valid for one year.

PAPE-DAWSON
2107 CITYWEST BLVD, 3RD FLR I HOUSTON, TX 77042 I 713.428.2400
TEXAS ENGINEERING FIRM #470 I TEXAS SURVEYING FIRM #10028800

PAPE-DAWSON
2107 CITYWEST BOULEVARD
3RD FLR
HOUSTON, TEXAS 77402
713-428-2400
TX FIRM #470

THIS DOCUMENT IS RELEASED FOR INTERIM REVIEW UNDER THE AUTHORIZATION OF AMIRHOSSEIN SHOKOUHI, P.E. (#139835) AND IS **NOT TO BE USED FOR CONSTRUCTION.**

SURVEYED BY:
PAPE-DAWSON
FB NO. 24-018

CITY OF HOUSTON
HOUSTON PUBLIC WORKS

LIFT STATION REHABILITATION AND RECONSTRUCTION
BEN'S BRANCH, WOODLAND RIDGE, ELMWOOD HILLS, FOREST SHORES, TRAIL RIVER, RIVERLAWN

CIVIL

WOODLAND RIDGE LIFT STATION EXISTING SITE PLAN & YARD PIPING

WBS NUMBER	FOR CITY OF HOUSTON USE ONLY
R-000267-0180-3	
DRAWING SCALE	
AS NOTED	
CITY OF HOUSTON PM	
BRENDA JOHNSON P.E.	
SHEET NO. *050* OF 338	

WR-C-01

FILE PATH: K:\Projects\423\77 COH LS Package\00\03 CADD\Plans\Sheets\03 Woodland Ridge\WR Existing Site & Yard Piping.dwg

TEMPORARY BENCHMARK DESCRIPTION

TBM–520 CUT "X" IN CURB INLET – ELEVATION 53.43'
TBM–521 CUT "X" IN CONCRETE PAD – ELEVATION 54.90'

LEGEND

TO BE REMOVED

NO.	DATE	REVISION	APP.

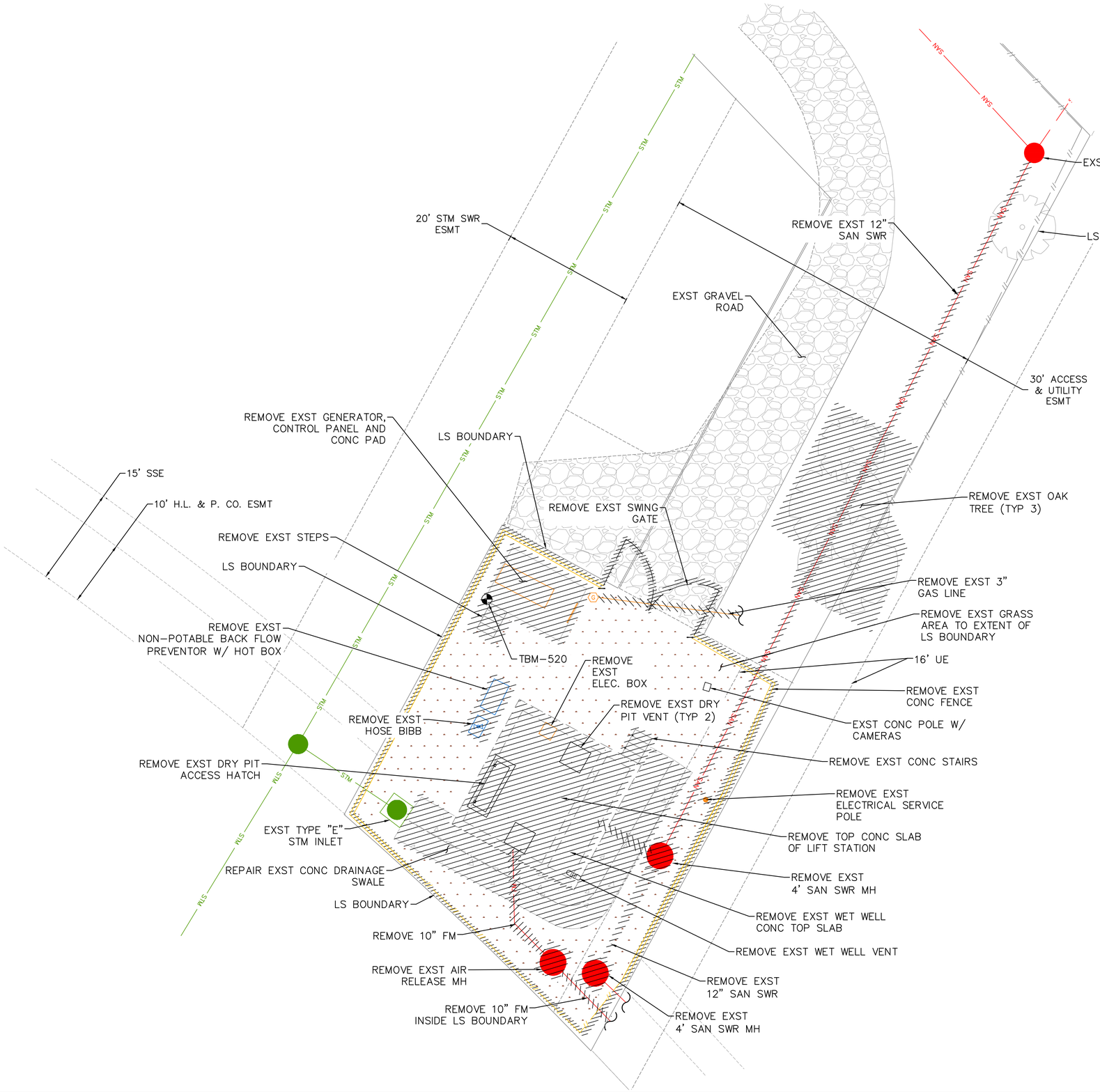

NOTE:

1. THE SOUND PRODUCED BY THE ERECTION, EXCAVATION, CONSTRUCTION, OR DEMOLITION OF ANY BUILDING OR STRUCTURE, INCLUDING THE USE OF ANY NECESSARY TOOLS OR EQUIPMENT, CONDUCTED BETWEEN THE HOURS OF 7 A.M. AND 8 P.M. SHALL NOT PRODUCE A SOUND EXCEEDING 85 DB(A) WHEN MEASURED FROM THE PROPERTY LINE OF THE RESIDENTIAL PROPERTY WHERE THE SOUND IS BEING RECEIVED.
2. PER SECTION 01145S, THE CITY OF HOUSTON TO HAVE REFUSAL RIGHTS TO RETAIN ALL ITEMS SHOWN TO BE DEMOLISHED AND/OR REMOVED.

SCALE: 1"= 8'

0' 8' 16' 24'

NOTICE:

FOR YOUR SAFETY, YOU ARE REQUIRED BY TEXAS LAW TO CALL 811 AT LEAST 48 HOURS BEFORE YOU DIG SO THAT UNDERGROUND LINES CAN BE MARKED. THIS SIGNATURE DOES NOT FULFILL YOUR OBLIGATION TO CALL 811

VERIFICATION OF PRIVATE UTILITY LINES

Date

CenterPoint Energy natural gas utilities shown. (Gas service lines are not shown). This signature not be used for conflict verification.

Signature valid for six months.

Date

CenterPoint Energy/UNDERGROUND Electrical Facilities Verification ONLY. (This signature verifies existing underground facilities – not to be used for conflict verification)

Signature valid for six months.

Date

Approved for AT&T underground conduit facilities only.
Signature valid for one year.

PAPE–DAWSON

2107 CITYWEST BLVD, 3RD FLR I HOUSTON, TX 77042 I 713.428.2400

TEXAS ENGINEERING FIRM #470 I TEXAS SURVEYING FIRM #10028800

PAPE–DAWSON
2107 CITYWEST BOULEVARD
3RD FLR
HOUSTON, TEXAS 77402
713–428–2400
TX FIRM #470

SURVEYED BY:
PAPE–DAWSON
FB NO. 24–018

THIS DOCUMENT IS RELEASED FOR INTERIM REVIEW UNDER THE AUTHORIZATION OF AMIRHOSSEIN SHOKOUHI, P.E. (#139835) AND IS **NOT TO BE USED FOR CONSTRUCTION.**

CITY OF HOUSTON

HOUSTON PUBLIC WORKS

LIFT STATION REHABILITATION AND RECONSTRUCTION
BEN'S BRANCH, WOODLAND RIDGE, ELMWOOD HILLS, FOREST SHORES, TRAIL RIVER, RIVERLAWN

MECHANICAL ELECTRICAL

WOODLAND RIDGE LIFT STATION DEMOLITION PLAN

WBS NUMBER	FOR CITY OF HOUSTON USE ONLY
R–000267–0180–3	
DRAWING SCALE	
AS NOTED	
CITY OF HOUSTON PM	
BRENDA JOHNSON P.E.	
SHEET NO. 051 OF 338	

WR–C–02

FILE PATH: K:\Projects\423\77 COH LS Package\00\03 CADD\Plans\Sheets\03 Woodland Ridge\WLR DEMO SITE.dwg

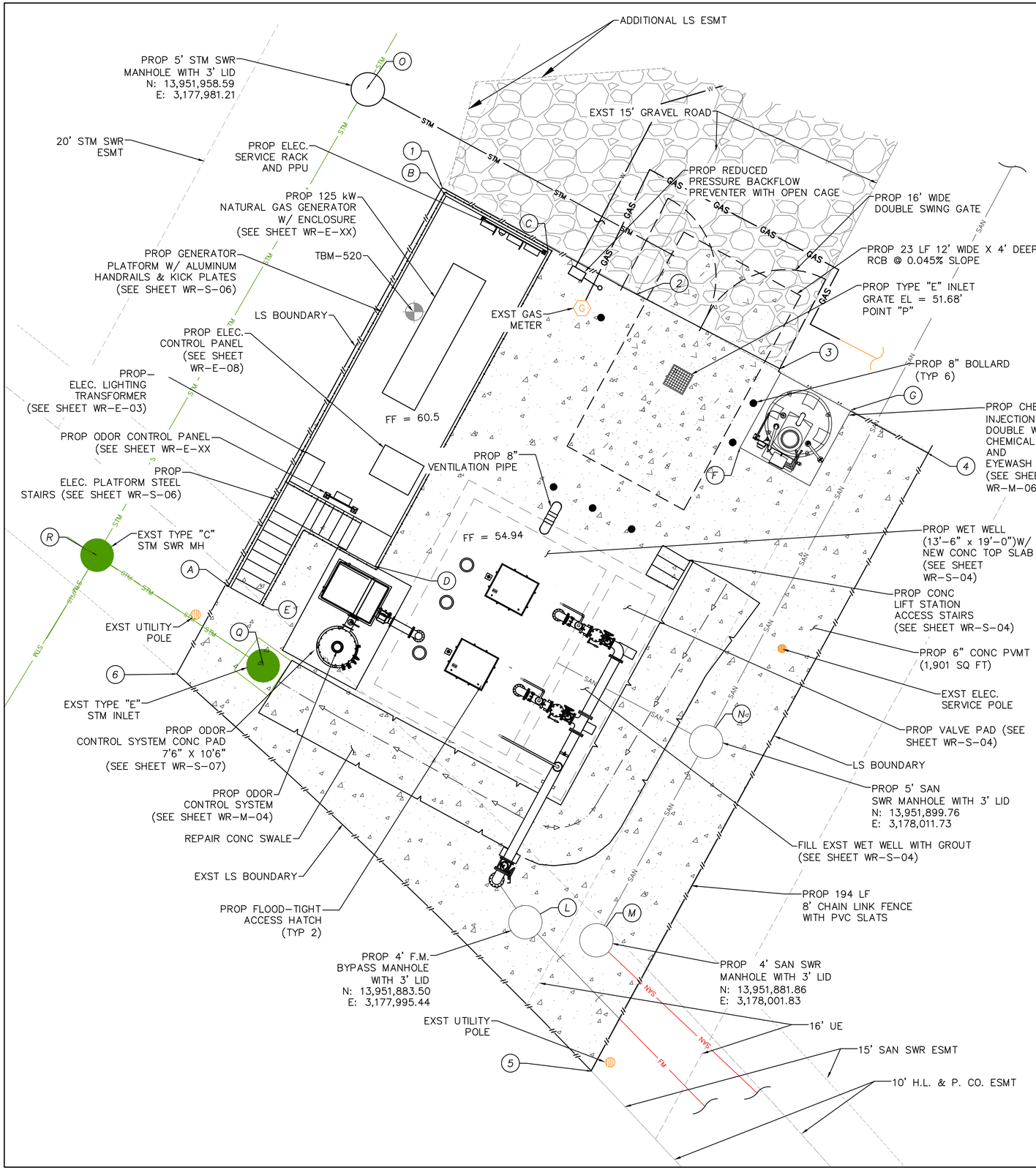

PROPERTY COORDINATION				
POINT #	PROPOSED ELEVATIONS	EXIST ELEVATION	NORTHING	EASTING
1	52.99	52.99	13951949.79	3177987.92
2	52.92	52.92	13951940.21	3178005.48
3	52.63	52.63	13951933.23	3178018.29
4	51.63	51.63	13951926.35	3178032.09
5	51.70	51.70	13951870.05	3178001.40
6	51.28	51.28	13951905.89	3177963.99

STRUCTURE COORDINATION				
POINT #	PROPOSED ELEVATIONS	EXIST ELEVATION	NORTHING	EASTING
A	51.64	51.64	13951918.04	3177971.26
B	53.04	53.04	13951948.55	3177988.15
C	54.45	54.45	13951943.94	3177997.48
D	52.18	52.18	13951916.48	3177982.39
E	51.38	51.38	13951916.59	3177973.89
F	52.32	52.32	13951926.70	3178017.79
G	51.99	51.99	13951929.97	3178024.54
H	51.42	51.42	13951908.33	3177991.18
I	51.76	51.76	13951912.14	3177993.24
J	51.76	51.76	13951915.74	3177979.40
K	50.94	50.94	13951905.69	3177980.54
L	52.33	52.33	13951883.50	3177995.43
M	54.54	54.54	13951881.86	3178001.83
N	54.50	54.50	13951899.76	3178011.73
O	52.52	52.52	13951958.64	3177981.12
P	51.68	51.68	13951932.45	3178009.22
Q	50.48	50.48	13951906.64	3177971.78
R	52.05	52.05	13951916.57	3177956.77

NOTE:

1. THE ELEVATED ELECTRICAL/GENERATOR PLATFORM TO BE INSTALLED AT ELEVATION OF 60.5' (9.5 FT HIGHER THAN FINISH GROUND ELEVATION OF 51.0')
2. CONTRACTOR SHALL BE RESPONSIBLE FOR REPAIRING AND REPAVING ANY PORTION OF CONC ACCESS ROAD AND PAVING.
3. PROP WET WELL TOP SLAB TO BE REPLACED TO ACCOMODATE NEW OPENINGS AND FLOOD-TIGHT ACCESS HATCHES. (SEE SHEET WR-S-07)
4. THE EXST WET WELL TO BE FILLED WITH GROUT AND ABANDONED. NEW VALVE PAD TO BE INSTALLED.
5. ACCORDING TO SURVEY, THE EXST FENCE IS CONSTRUCTED SLIGHTY OUTSIDE OF THE LIFT STATION BOUNDARY. THE NEW FENCE LOCATION TO BE ADJUSTED ACCORDINGLY AND INSTALLED AT THE LIFT STATION BOUNDARY.
6. CONTRACTOR TO TAP A 3/4" WATER LINE TO THE EXST 8" PVC POTABLE WATER LINE LOCATED AT THE ROW. THE 3/4" LINE TO BE EXTENDED WITHIN SAN SWR AND ACCESS EASEMENT AND CONNECTED TO THE PROP BACKFLOW PREVENTOR (SEE SHEET G-03 FOR DETAIL).
7. THE PROP WET WELL INTERIOR WALLS AND CEILING TO BE RE-COATED WITH COH WWO APPROVED MATERIAL.
8. THE EXST CONC SWALE PAVEMENT TO BE REPAIRED AT THE SAME ELEVATION AND GRADE. NO UNDERGROUND DETENTION IS REQUIRED FOR THIS IMPROVEMENT.
9. ALL PROP MANHOLES RIM ELEVATIONS AT GRADE AND LIDS TO BE FLOOD-TIGHT.
10. PROP GENERATOR WILL BE USED FOR EMERGENCY AND TESTING ONLY. NOISE AND SOUND REGULATION IN CODE COMPLIANCE CHAPTER 30 NOT APPLICABLE.
11. PROP UNDERGROUND DETENTION BOX TO BE MAINTAINED BY CITY OF HOUSTON WASTEWATER OPERATIONS.
12. SUBSURFACE DRAINAGE SYSTEMS ARE REQUIRED TO BE DRAINED IN 48 HOURS.

TEMPORARY BENCHMARK DESCRIPTION

TBM-520 CUT "X" IN CONCRETE PAD – ELEVATION 54.90'
TBM-521 CUT "X" IN CURB INLET – ELEVATION 53.43'

LEGEND

EXISTING GRAVEL AREA

EXISTING GRASS AREA

PROPOSED PAVEMENT

NO.	DATE	REVISION	APP.

SCALE: 1"= 5'
0' 5' 10' 15'

NOTICE:
FOR YOUR SAFETY, YOU ARE REQUIRED BY TEXAS LAW TO CALL 811 AT LEAST 48 HOURS BEFORE YOU DIG SO THAT UNDERGROUND LINES CAN BE MARKED. THIS SIGNATURE DOES NOT FULFILL YOUR OBLIGATION TO CALL 811

VERIFICATION OF PRIVATE UTILITY LINES

Date

CenterPoint Energy natural gas utilities shown. (Gas service lines are not shown). This signature not be used for conflict verification.

Signature valid for six months.

Date

CenterPoint Energy/UNDERGROUND Electrical Facilities Verification ONLY. (This signature verifies existing underground facilities – not to be used for conflict verification)

Signature valid for six months.

Date

Approved for AT&T underground conduit facilities only.
Signature valid for one year.

PAPE-DAWSON
2107 CITYWEST BLVD, 3RD FLR I HOUSTON, TX 77042 I 713.428.2400
TEXAS ENGINEERING FIRM #470 I TEXAS SURVEYING FIRM #10028800

PAPE-DAWSON
2107 CITYWEST BOULEVARD
3RD FLR
HOUSTON, TEXAS 77402
713-428-2400
TX FIRM #470

SURVEYED BY:
PAPE-DAWSON
FB NO. 24-018

THIS DOCUMENT IS RELEASED FOR INTERIM REVIEW UNDER THE AUTHORIZATION OF AMIRHOSSEIN SHOKOUHI, P.E. (#139835) AND IS **NOT TO BE USED FOR CONSTRUCTION.**

CITY OF HOUSTON
HOUSTON PUBLIC WORKS

LIFT STATION REHABILITATION AND RECONSTRUCTION
BEN'S BRANCH, WOODLAND RIDGE, ELMWOOD HILLS, FOREST SHORES, TRAIL RIVER, RIVERLAWN

CIVIL

WOODLAND RIDGE LIFT STATION PROPOSED SITE PLAN

WBS NUMBER	FOR CITY OF HOUSTON USE ONLY
R-000267-0180-3	
DRAWING SCALE	
AS NOTED	
CITY OF HOUSTON PM	
BRENDA JOHNSON P.E.	
SHEET NO. 052 OF 338	

WR-C-03

FILE PATH: K:\Projects\423\77 COH LS Package\00\03 CADD\Plans\Sheets\03 Woodland Ridge\LAYOUT-C-4237700.dwg

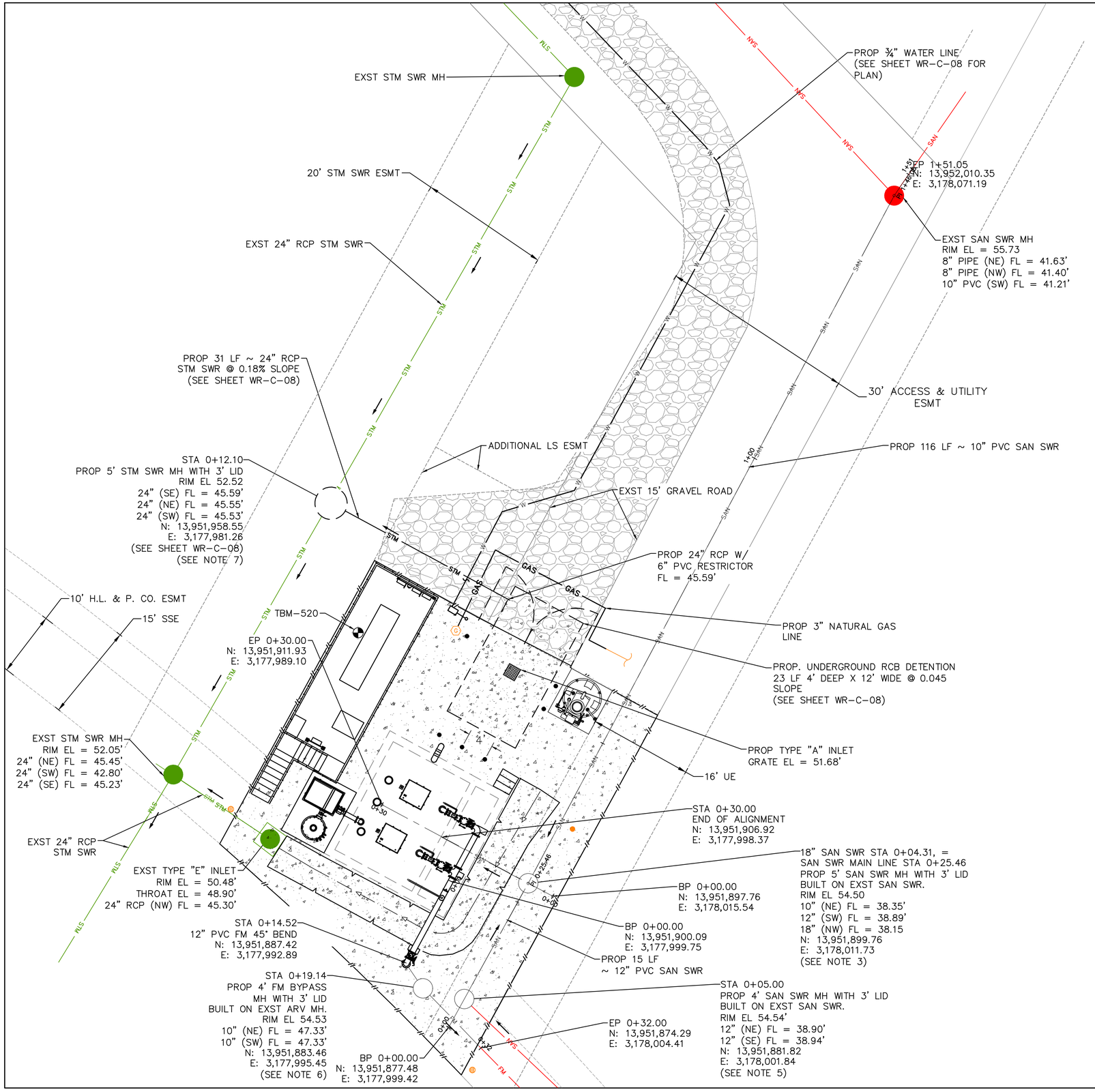

PROP WATER LINE PIPE SCHEDULE		
SIZE	MATERIAL	FITTING
3/4 INCH	SCH 40 G.S.	STRAIGHT PIPE
3/4 INCH	SCH 40 G.S.	BACKFLOW PREVENTER
3/4 INCH	SCH 40 G.S.	45° BEND
3/4 INCH	SCH 40 G.S.	45° BEND
3/4 INCH	SCH 40 G.S.	STRAIGHT PIPE
3/4 INCH	SCH 40 G.S.	HOSE BIBB

PROP 12" DIP FM PIPE SCHEDULE		
SIZE	MATERIAL	FITTING
10 INCH	PVC	45° BEND
10 INCH	PVC	STRAIGHT PIPE
10 INCH	PVC	45° BEND
10 INCH	PVC	STRAIGHT PIPE

NOTE:

1. CONTRACTOR TO RE-ROUTE THE EXST 3" NATURAL GAS LINE AS SHOWN HERE.
2. CONTRACTOR TO FIELD VERIFY THE LOCATION AND ELEVATION OF THE EXST 3" NATURAL GAS LINE AND CONNECT TO THE PROP NATURAL GAS LINE.
3. CONTRACTOR TO FIELD VERIFY THE EXST 12" SANITARY SEWER FLOWLINE ELEVATION AT STA 0+05.00 AND CONNECT TO THE PROP SANTIARY SEWER MANHOLE.
4. CONTRACTOR TO FIELD VERIFY THE EXST 10" FORCE MAIN FLOWLINE ELEVATION AT STA 0+31.35 AND CONNECT TO THE PROP FORCE MAIN BYPASS MANHOLE.
5. THIS SITE PLAN WAS DEVELOPED FROM ORIGINAL CONSTRUCTION DRAWINGS, RECENT TOPOGRAPHICAL SURVEY, AND FIELD OBSERVATIONS. SOME BURIED ITEMS MAY EXST ELSEWHERE, THEREFORE THE CONTRACTOR MUST FIELD VERIFY ALL UTLITIES AND STRUCTURES PRIOR TO CONSTRUCTION. SUBSURFACE ELECTRICAL ITEMS ARE SHOWN ON THE ELECTRICAL SITE PLAN.
6. CONTRACTOR TO TAP A 3/4" WATER LINE TO THE EXST 8" PVC WATER LINE LOCATED AT THE ROW. THE 3/4" LINE TO BE EXTENDED WITHIN SANITARY SEWER AND ACCESS EASEMENT AND CONNECTED TO THE PROP BACKFLOW PREVENTOR.
7. SUBSURFACE DRAINAGE SYSTEMS ARE REQUIRED TO BE DRAINED IN 48 HOURS.

TEMPORARY BENCHMARK DESCRIPTION

TBM-520 CUT "X" IN CURB INLET - ELEVATION 53.43'
TBM-521 CUT "X" IN CONCRETE PAD - ELEVATION 54.90'

LEGEND

EXISTING PAVEMENT

EXISTING GRASS AREA

PROPOSED PAVEMENT

SCALE: 1"= 5'

0' 5' 10' 15'

NO.	DATE	REVISION	APP.

NOTICE:
FOR YOUR SAFETY, YOU ARE REQUIRED BY TEXAS LAW TO CALL 811 AT LEAST 48 HOURS BEFORE YOU DIG SO THAT UNDERGROUND LINES CAN BE MARKED. THIS SIGNATURE DOES NOT FULFILL YOUR OBLIGATION TO CALL 811

VERIFICATION OF PRIVATE UTILITY LINES

Date

CenterPoint Energy natural gas utilities shown. (Gas service lines are not shown). This signature not be used for conflict verification.
Signature valid for six months.

Date

CenterPoint Energy/UNDERGROUND Electrical Facilities Verification ONLY. (This signature verifies existing underground facilities - not to be used for conflict verification)
Signature valid for six months.

Date

Approved for AT&T underground conduit facilities only.
Signature valid for one year.

PAPE-DAWSON
2107 CITYWEST BLVD, 3RD FLR I HOUSTON, TX 77042 I 713.428.2400
TEXAS ENGINEERING FIRM #470 I TEXAS SURVEYING FIRM #10028800

PAPE-DAWSON
2107 CITYWEST BOULEVARD
3RD FLR
HOUSTON, TEXAS 77402
713-428-2400
TX FIRM #470

SURVEYED BY:
PAPE-DAWSON
FB NO. 24-018

THIS DOCUMENT IS RELEASED FOR INTERIM REVIEW UNDER THE AUTHORIZATION OF AMIRHOSSEIN SHOKOUHI, P.E. (#139835) AND IS **NOT TO BE USED FOR CONSTRUCTION.**

CITY OF HOUSTON
HOUSTON PUBLIC WORKS

LIFT STATION REHABILITATION AND RECONSTRUCTION
BEN'S BRANCH, WOODLAND RIDGE, ELMWOOD HILLS, FOREST SHORES, TRAIL RIVER, RIVERLAWN

CIVIL

WOODLAND RIDGE LIFT STATION PROPOSED YARD PIPING PLAN

WBS NUMBER	FOR CITY OF HOUSTON USE ONLY
R-000267-0180-3	
DRAWING SCALE	
AS NOTED	
CITY OF HOUSTON PM	
BRENDA JOHNSON P.E.	
SHEET NO. 053 OF 338	

WR-C-04

FILE PATH: K:\Projects\423\77 COH LS Package\00\03 CADD\Plans\Sheets\03 Woodland Ridge\WLR PROP YARD PIPING PLAN.dwg

SCALE: 1"= 10'

0' 10' 20' 30'

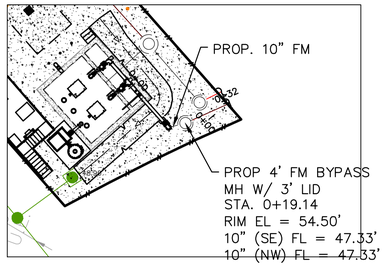

PLAN

SCALE: 1"= 20'

0' 20' 40' 60'

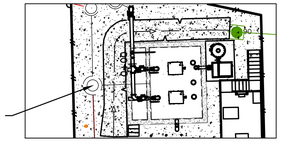

PLAN

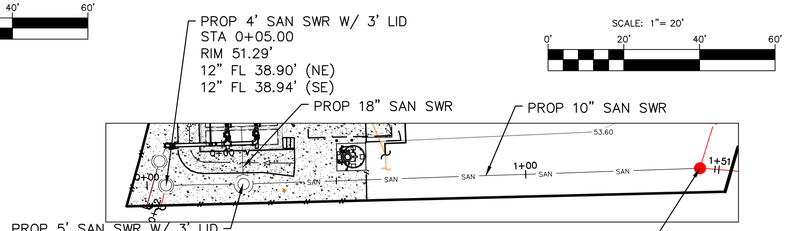

PLAN

SCALE: 1"= 20'

0' 20' 40' 60'

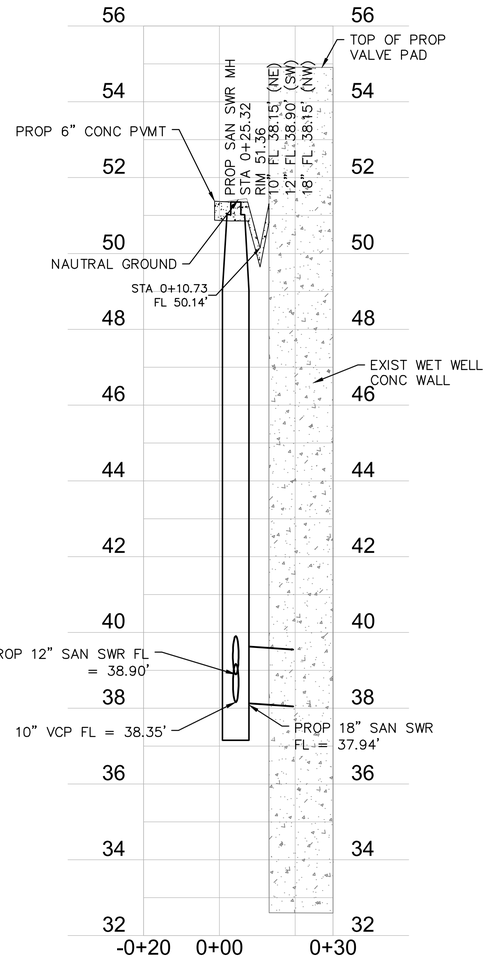

WOODLAND RIDGE
PROPOSED INFLUENT PROFILE
1"=2'

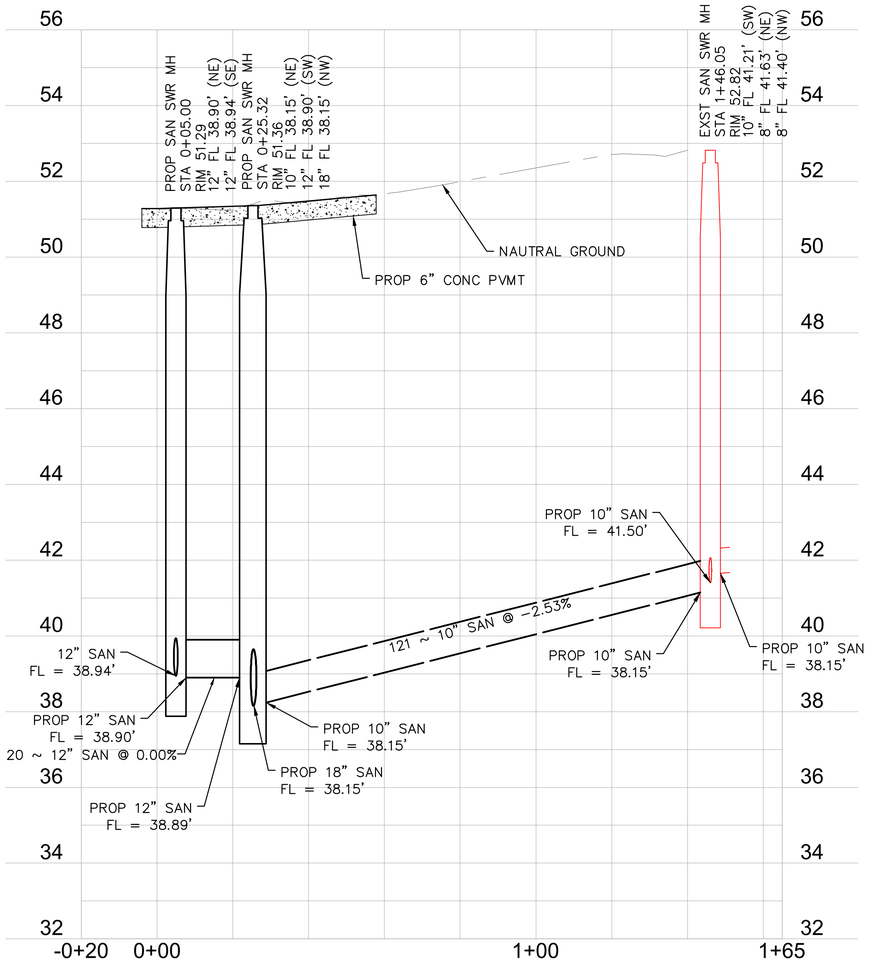

WOODLAND RIDGE PROPOSED SANITARY PROFILE
1"=2'

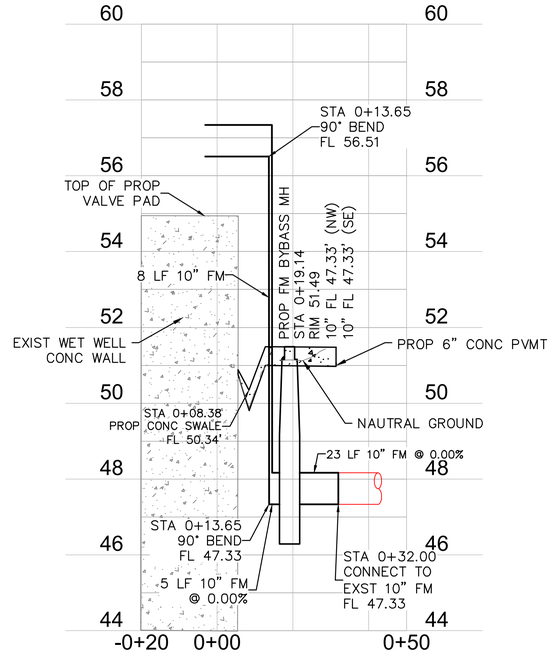

WOODLAND RIDGE
PROPOSED FORCE MAIN PROFILE
1"=2'

TEMPORARY BENCHMARK DESCRIPTION

TBM–520 CUT "X" IN CURB INLET – ELEVATION 53.43'
TBM–521 CUT "X" IN CONCRETE PAD – ELEVATION 54.90'

LEGEND

PROPOSED PAVEMENT

NO.	DATE	REVISION	APP.

NOTICE:
FOR YOUR SAFETY, YOU ARE REQUIRED BY TEXAS LAW TO CALL 811 AT LEAST 48 HOURS BEFORE YOU DIG SO THAT UNDERGROUND LINES CAN BE MARKED. THIS SIGNATURE DOES NOT FULFILL YOUR OBLIGATION TO CALL 811

VERIFICATION OF PRIVATE UTILITY LINES

Date

CenterPoint Energy natural gas utilities shown. (Gas service lines are not shown). This signature not be used for conflict verification.

Signature valid for six months.

Date

CenterPoint Energy/UNDERGROUND Electrical Facilities Verification ONLY. (This signature verifies existing underground facilities – not to be used for conflict verification)

Signature valid for six months.

Date

Approved for AT&T underground conduit facilities only.
Signature valid for one year.

PAPE–DAWSON
2107 CITYWEST BLVD, 3RD FLR I HOUSTON, TX 77042 I 713.428.2400
TEXAS ENGINEERING FIRM #470 I TEXAS SURVEYING FIRM #10028800

PAPE–DAWSON
2107 CITYWEST BOULEVARD
3RD FLR
HOUSTON, TEXAS 77402
713–428–2400
TX FIRM #470

SURVEYED BY:
PAPE–DAWSON
FB NO. 24–018

THIS DOCUMENT IS RELEASED FOR INTERIM REVIEW UNDER THE AUTHORIZATION OF AMIRHOSSEIN SHOKOUHI, P.E. (#139835) AND IS **NOT TO BE USED FOR CONSTRUCTION.**

CITY OF HOUSTON
HOUSTON PUBLIC WORKS

LIFT STATION REHABILITATION AND RECONSTRUCTION
BEN'S BRANCH, WOODLAND RIDGE, ELMWOOD HILLS, FOREST SHORES, TRAIL RIVER, RIVERLAWN

CIVIL

WOODLAND RIDGE LIFT STATION PROPOSED YARD PIPING PROFILE

WBS NUMBER	FOR CITY OF HOUSTON USE ONLY
R–000267–0180–3	
DRAWING SCALE	
AS NOTED	
CITY OF HOUSTON PM	
BRENDA JOHNSON P.E.	
SHEET NO. 054 OF 338	

WR–C–05

FILE PATH: K:\Projects\423\77 COH LS Package\00\03 CADD\Plans\Sheets\03 Woodland Ridge\WLR PROP YARD PIPING PROFILE.dwg

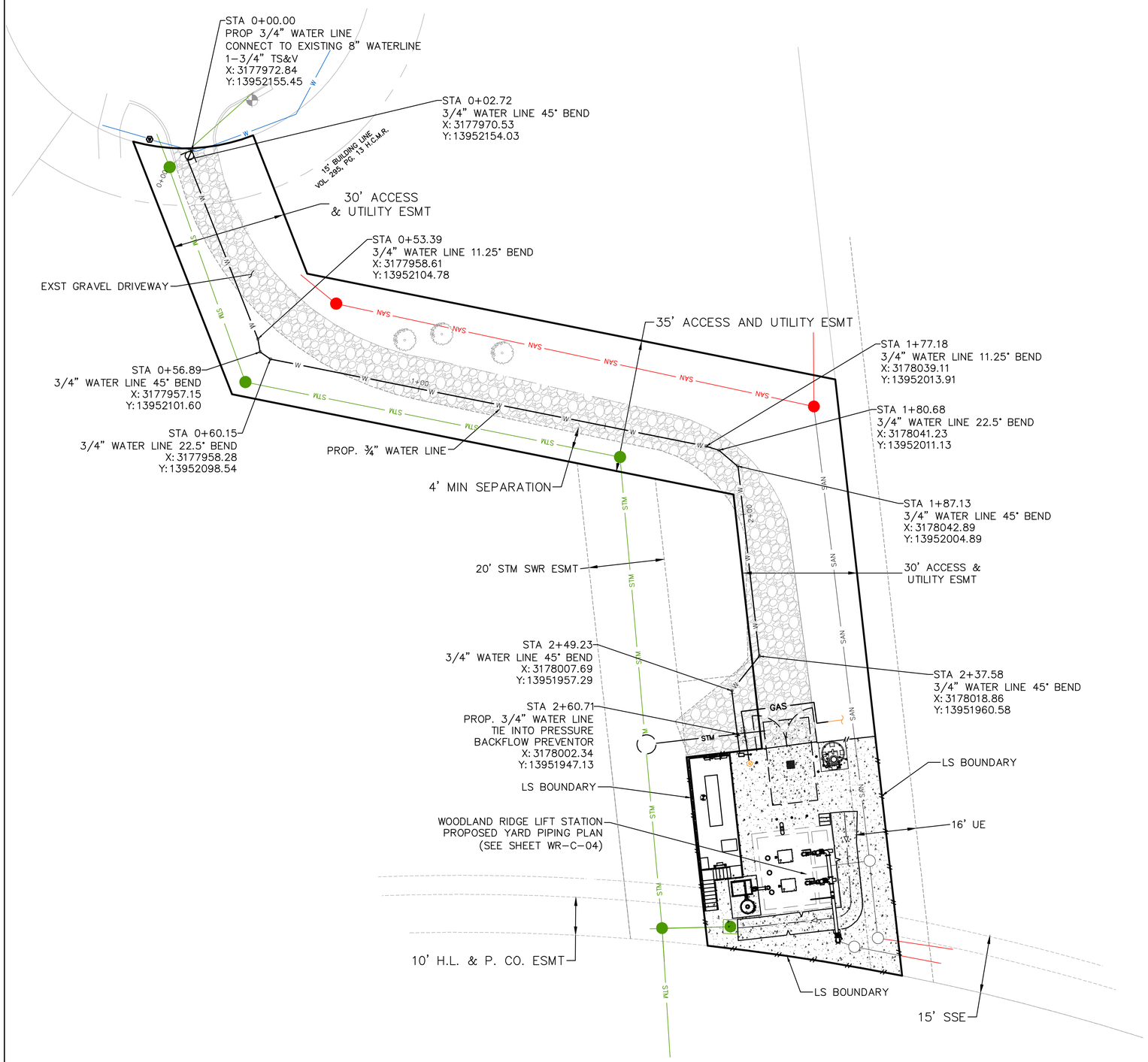

TEMPORARY BENCHMARK DESCRIPTION

TBM-520 CUT "X" IN CONCRETE PAD – ELEVATION 54.90'
TBM-521 CUT "X" IN CURB INLET – ELEVATION 53.43'

LEGEND

EXISTING GRAVEL AREA

EXISTING GRASS AREA

PROPOSED PAVEMENT

NO.	DATE	REVISION	APP.

SCALE: 1"= 15'

0' 15' 30' 45'

NOTE:

1. THE PROPOSED WATER LINE TO BE INSTALLED 3 FT BELOW NATURAL GROUND ELEVATION.
2. CONTRACTOR TO PROVIDE MIN. 4 FT HORIZONTAL DISTANCE AND 2 FT VERTICAL DISTANCE FROM THE EXISTING SANITARY AND STORM SEWER AT ALL LOCATIONS.

NOTICE:
FOR YOUR SAFETY, YOU ARE REQUIRED BY TEXAS LAW TO CALL 811 AT LEAST 48 HOURS BEFORE YOU DIG SO THAT UNDERGROUND LINES CAN BE MARKED. THIS SIGNATURE DOES NOT FULFILL YOUR OBLIGATION TO CALL 811

VERIFICATION OF PRIVATE UTILITY LINES

Date

CenterPoint Energy natural gas utilities shown. (Gas service lines are not shown). This signature not be used for conflict verification.

Signature valid for six months.

Date

CenterPoint Energy/UNDERGROUND Electrical Facilities Verification ONLY. (This signature verifies existing underground facilities – not to be used for conflict verification)

Signature valid for six months.

Date

Approved for AT&T underground conduit facilities only.
Signature valid for one year.

PAPE-DAWSON
2107 CITYWEST BLVD, 3RD FLR I HOUSTON, TX 77042 I 713.428.2400
TEXAS ENGINEERING FIRM #470 I TEXAS SURVEYING FIRM #10028800

PAPE-DAWSON
2107 CITYWEST BOULEVARD
3RD FLR
HOUSTON, TEXAS 77402
713-428-2400
TX FIRM #470

SURVEYED BY:
PAPE-DAWSON
FB NO. 24-018

THIS DOCUMENT IS RELEASED FOR INTERIM REVIEW UNDER THE AUTHORIZATION OF AMIRHOSSEIN SHOKOUHI, P.E. (#139835) AND IS **NOT TO BE USED FOR CONSTRUCTION.**

CITY OF HOUSTON
HOUSTON PUBLIC WORKS

LIFT STATION REHABILITATION AND RECONSTRUCTION
BEN'S BRANCH, WOODLAND RIDGE, ELMWOOD HILLS, FOREST SHORES, TRAIL RIVER, RIVERLAWN

CIVIL

WOODLAND RIDGE LIFT STATION PROPOSED POTABLE WATER LINE PLAN

WBS NUMBER	FOR CITY OF HOUSTON USE ONLY
R-000267-0180-3	
DRAWING SCALE	
AS NOTED	
CITY OF HOUSTON PM	
BRENDA JOHNSON P.E.	
SHEET NO. 055 OF 338	

WR-C-06

FILE PATH: K:\Projects\423\77 COH LS Package\00\03 CADD\Plans\Sheets\03 Woodland Ridge\WLR PROP WATER LINE PLAN.dwg

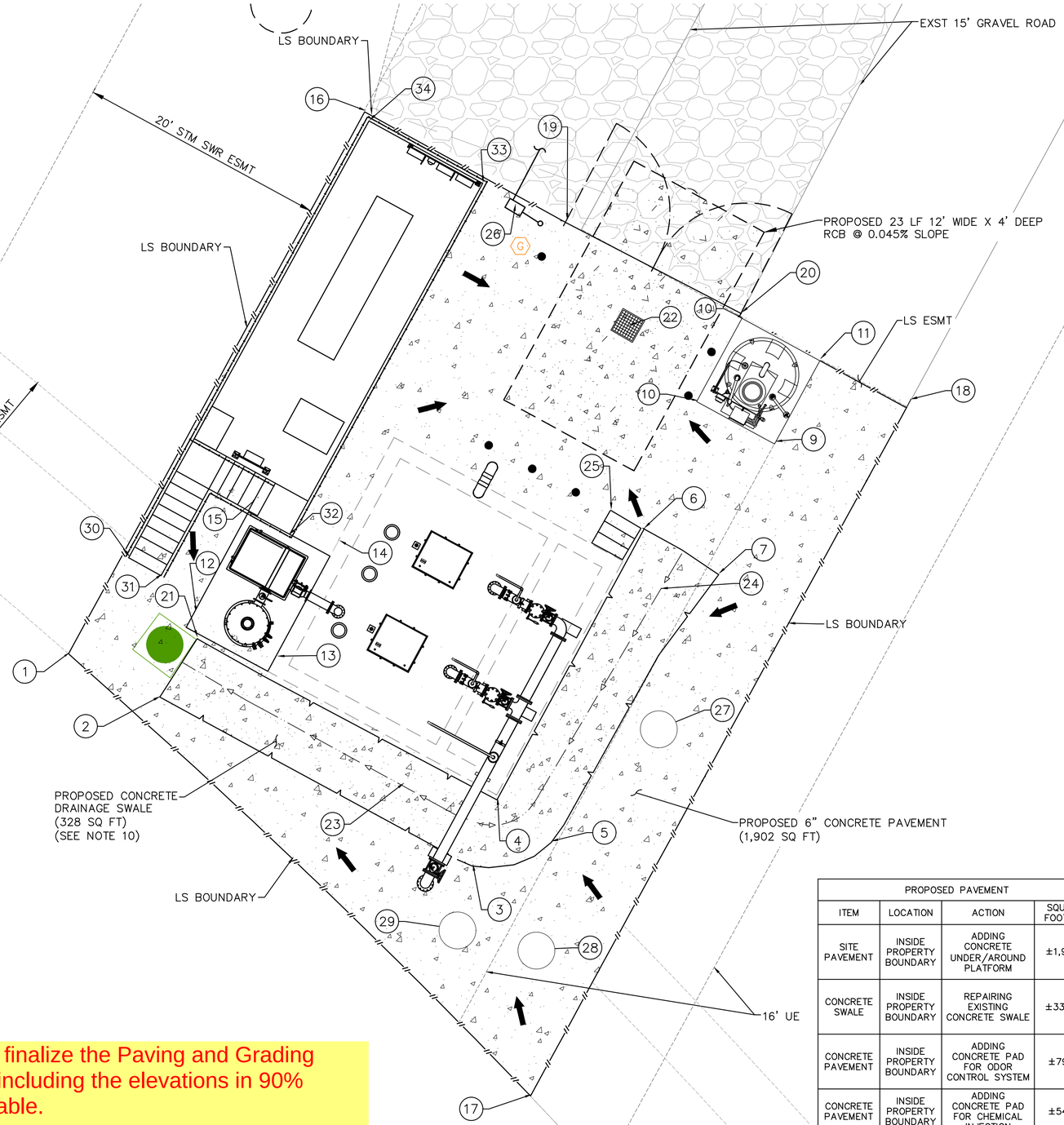

PD will finalize the Paving and Grading sheet, including the elevations in 90% deliverable.

PROPOSED PAVEMENT			
ITEM	LOCATION	ACTION	SQUARE FOOTAGE
SITE PAVEMENT	INSIDE PROPERTY BOUNDARY	ADDING CONCRETE UNDER/AROUND PLATFORM	±1,989.1
CONCRETE SWALE	INSIDE PROPERTY BOUNDARY	REPAIRING EXISTING CONCRETE SWALE	±330.58
CONCRETE PAVEMENT	INSIDE PROPERTY BOUNDARY	ADDING CONCRETE PAD FOR ODOR CONTROL SYSTEM	±79.50
CONCRETE PAVEMENT	INSIDE PROPERTY BOUNDARY	ADDING CONCRETE PAD FOR CHEMICAL INJECTION	±54.62

NOTES:

1. THE CONTRACTOR SHALL BE FULLY RESPONSIBLE FOR ANY DAMAGES TO EXISTING WATER, WASTEWATER, STORM WATER LINES AND TRAFFIC CONTROL DEVICES. ALL DAMAGES SHALL BE IN ACCORDANCE WITH THE "STANDARD CONSTRUCTION SPECIFICATIONS" REFERENCED ABOVE, AT NO COST TO THE CITY OF HOUSTON.
2. ADEQUATE DRAINAGE SHALL BE MAINTAINED AT ALL TIMES DURING CONSTRUCTION AND ANY DRAINAGE DITCH OR STRUCTURE DISTURBED DURING CONSTRUCTION SHALL BE RESTORED TO THE SATISFACTION OF THE OWNING AUTHORITY.
3. CONTRACTOR SHALL TAKE NECESSARY PRECAUTIONS TO PROTECT ROOT SYSTEMS OF SHRUBS, PLANTS, AND TREES ALONG THE AREA OF EXCAVATION.
4. THE CONTRACTOR SHALL COMPLY WITH THE LATEST EDITION OF OSHA REGULATIONS AND THE STATE OF TEXAS LAWS CONCERNING EXCAVATION.
5. REFER TO TOPOGRAPHIC SURVEY DRAWING FOR PROPERTY LINES BEARING AND DISTANCE.
6. CONTRACTOR TO COORDINATE OF LAYDOWN AREA WITH OWNER.
7. AREA UNDER ELECTRICAL PLATFORM TO BE PAVED AND GRADED TO DRAIN TOWARDS ON-SITE INLET.
8. STORMWATER RETENTION BOX TO BE MAINTAINED BY HOUSTON PUBLIC WORKS WASTERWATER OPERATIONS.
9. THE EXISTING 2" NATURAL GAS LINE IS LOCATED IN FRONT OF THE SWING GATE. CONTRACTOR TO RELOCATED THE NATURAL GAS LINE AROUND THE PROPOSED UNDERGROUND DETENTION BOX AND CONNECT TO THE NATURAL GAS METER.
10. THE EXISTING CONCRETE SWALE PAVEMENT TO BE REPLACED AT THE SAME ELEVATION AND GRADE. NO UNDERGROUND DETENTION IS REQUIRED FOR THIS IMPROVEMENT.
11. CONTRACTOR TO REHABILITATE ALL DISTURBED SITE & LANDSCAPING TO PRE-CONSTRUCTION OR BETTER CONDITIONS.

PAVEMENT COORDINATION			
POINT #	ELEVATION	NORTHING	EASTING
1	52.33	13951905.89	3177963.99
2	50.45	13951902.35	3177971.35
3	50.81	13951888.95	3177996.12
4	50.68	13951894.06	3177998.63
5	51.11	13951892.06	3178004.06
6	51.77	13951916.04	3178010.58
7	51.51	13951912.28	3178016.57
8	52.32	13951926.40	3178014.85
9	51.97	13951922.95	3178021.13
12	54.93	13951909.15	3177974.25
13	50.86	13951905.69	3177980.54
14	54.93	13951914.92	3177985.89
15	54.93	13951918.48	3177979.29
16	53.12	13951949.73	3177987.94
17	51.50	13951870.12	3178001.36
18	52.40	13951926.37	3178032.08
19	52.87	13951940.78	3178004.21
23	49.72	13951894.90	3177991.60
24	50.67	13951910.92	3178011.72
25	53.00	13951942.22	3177998.47
26	52.19	13951917.50	3178007.83
27	54.50	13951899.81	3178011.72
28	54.54	13951881.86	3178001.83
29	54.53	13951883.50	3177995.44
32	51.92	13951915.61	3177981.91
33	52.99	13951943.94	3177997.48
34	52.95	13951949.00	3177988.28

TEMPORARY BENCHMARK DESCRIPTION

TBM-520 CUT "X" IN CURB INLET - ELEVATION 53.43'
TBM-521 CUT "X" IN CONCRETE PAD - ELEVATION 54.90'

LEGEND

DRAINAGE DIRECTION

PROPOSED CONCRETE PAVEMENT

SCALE: 1"= 5'

0' 5' 10' 15'

NO.	DATE	REVISION	APP.

NOTICE:
FOR YOUR SAFETY, YOU ARE REQUIRED BY TEXAS LAW TO CALL 811 AT LEAST 48 HOURS BEFORE YOU DIG SO THAT UNDERGROUND LINES CAN BE MARKED. THIS SIGNATURE DOES NOT FULFILL YOUR OBLIGATION TO CALL 811

VERIFICATION OF PRIVATE UTILITY LINES

Date

CenterPoint Energy natural gas utilities shown. (Gas service lines are not shown). This signature not be used for conflict verification.

Signature valid for six months.

Date

CenterPoint Energy/UNDERGROUND Electrical Facilities Verification ONLY. (This signature verifies existing underground facilities - not to be used for conflict verification)

Signature valid for six months.

Date

Approved for AT&T underground conduit facilities only.
Signature valid for one year.

PAPE-DAWSON
2107 CITYWEST BLVD, 3RD FLR I HOUSTON, TX 77042 I 713.428.2400
TEXAS ENGINEERING FIRM #470 I TEXAS SURVEYING FIRM #10028800

PAPE-DAWSON
2107 CITYWEST BOULEVARD
3RD FLR
HOUSTON, TEXAS 77402
713-428-2400
TX FIRM #470

SURVEYED BY:
PAPE-DAWSON
FB NO. 24-018

THIS DOCUMENT IS RELEASED FOR INTERIM REVIEW UNDER THE AUTHORIZATION OF AMIRHOSSEIN SHOKOUHI, P.E. (#139835) AND IS **NOT TO BE USED FOR CONSTRUCTION.**

CITY OF HOUSTON
HOUSTON PUBLIC WORKS

LIFT STATION REHABILITATION AND RECONSTRUCTION
BEN'S BRANCH, WOODLAND RIDGE, ELMWOOD HILLS, FOREST SHORES, TRAIL RIVER, RIVERLAWN

CIVIL

WOODLAND RIDGE LIFT STATION PAVING AND GRADING PLAN

WBS NUMBER	FOR CITY OF HOUSTON USE ONLY
R-000267-0180-3	
DRAWING SCALE	
AS NOTED	
CITY OF HOUSTON PM	
BRENDA JOHNSON P.E.	
SHEET NO. 056 OF 338	

WR-C-07

FILE PATH: K:\Projects\423\77 COH LS Package\00\03 CADD\Plans\Sheets\03 Woodland Ridge\WLR PAVING AND GRADING.dwg

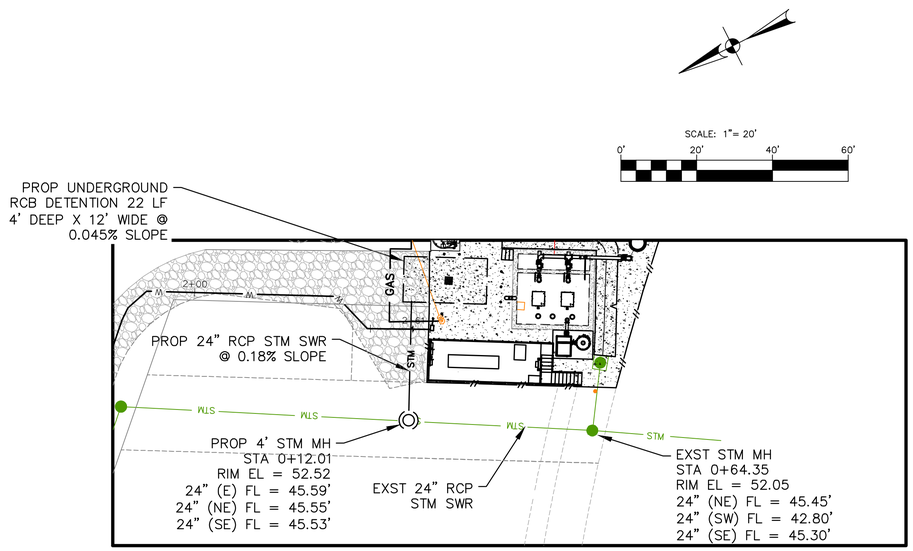

PLAN

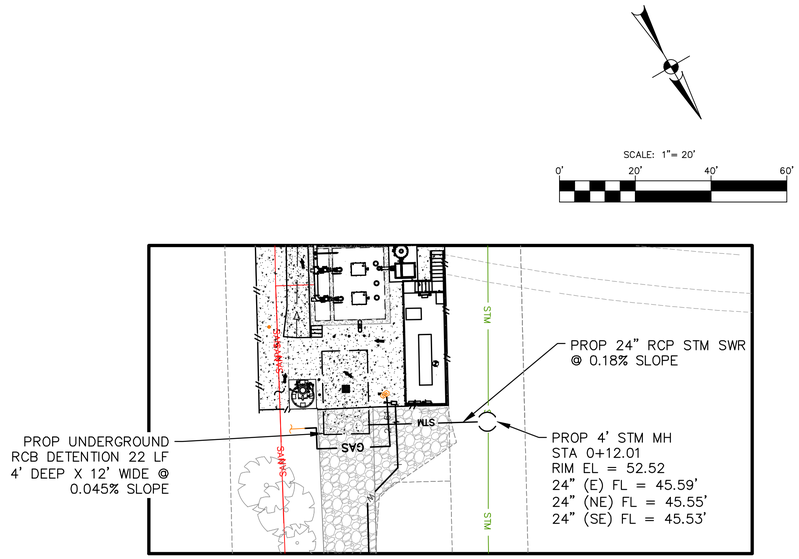

PLAN

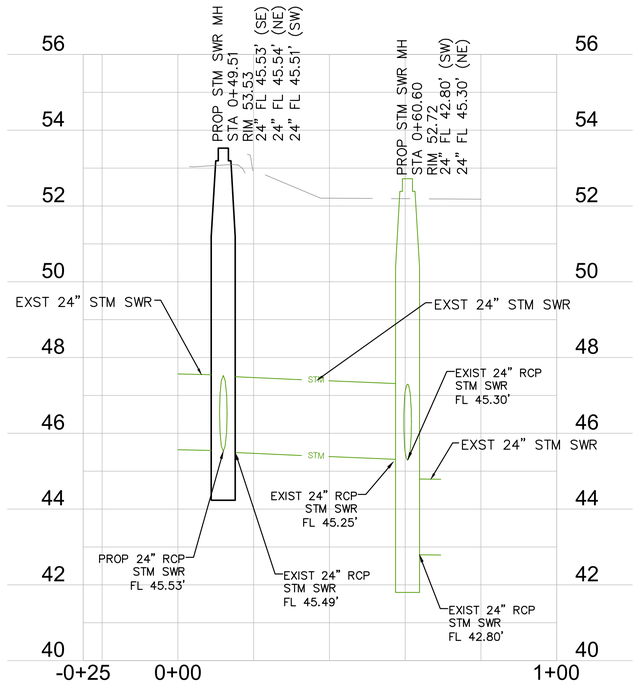

WOODLAND RIDGE PROPOSED STORM SEWER PROFILE

1"=2'

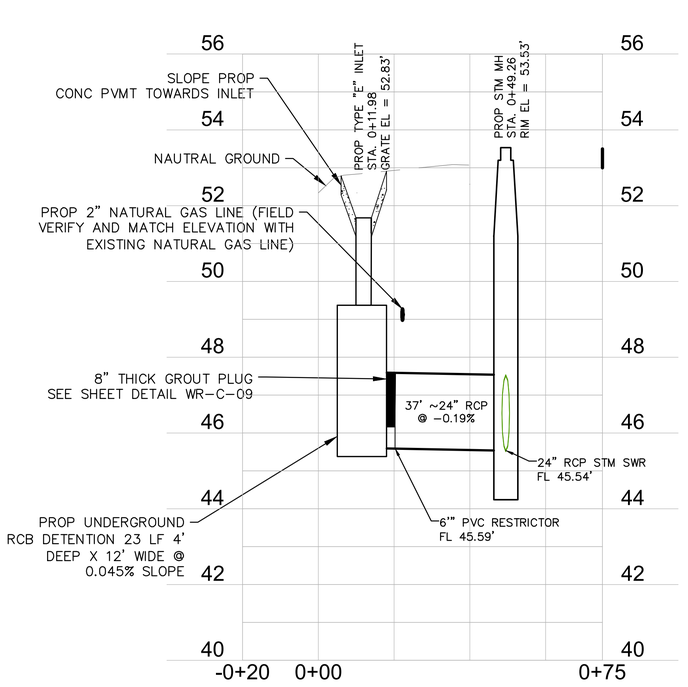

WOODLAND RIDGE PROPOSED STORM PROFILE

1"=2'

TEMPORARY BENCHMARK DESCRIPTION

TBM-520 CUT "X" IN CONCRETE PAD – ELEVATION 54.90'
TBM-521 CUT "X" IN CURB INLET – ELEVATION 53.43'

LEGEND

- EXISTING GRAVEL AREA
- EXISTING GRASS AREA
- PROPOSED PAVEMENT

NO.	DATE	REVISION	APP.

NOTES:

1. CONTRACTOR TO FIELD VERIFY THE EXISTING 24" RCP STORM SEWER FLOWLINE AND MATCH WITH PROPOSED 5' STORM SEWER MANHOLE FLOWLINE. THE STORM SEWER TO REMAIN OPERATIONAL/IN SERVICE DURING MANHOLE CONSTRUCTION.

NOTICE:
FOR YOUR SAFETY, YOU ARE REQUIRED BY TEXAS LAW TO CALL 811 AT LEAST 48 HOURS BEFORE YOU DIG SO THAT UNDERGROUND LINES CAN BE MARKED. THIS SIGNATURE DOES NOT FULFILL YOUR OBLIGATION TO CALL 811

VERIFICATION OF PRIVATE UTILITY LINES

Date

CenterPoint Energy natural gas utilities shown. (Gas service lines are not shown). This signature not be used for conflict verification.

Signature valid for six months.

Date

Date

CenterPoint Energy/UNDERGROUND Electrical Facilities Verification ONLY. (This signature verifies existing underground facilities – not to be used for conflict verification)

Signature valid for six months.

Date

Approved for AT&T underground conduit facilities only.
Signature valid for one year.

PAPE-DAWSON
2107 CITYWEST BLVD, 3RD FLR I HOUSTON, TX 77042 I 713.428.2400
TEXAS ENGINEERING FIRM #470 I TEXAS SURVEYING FIRM #10028800

PAPE-DAWSON
2107 CITYWEST BOULEVARD
3RD FLR
HOUSTON, TEXAS 77402
713-428-2400
TX FIRM #470

SURVEYED BY:
PAPE-DAWSON
FB NO. 24-018

THIS DOCUMENT IS RELEASED FOR INTERIM REVIEW UNDER THE AUTHORIZATION OF AMIRHOSSEIN SHOKOUHI, P.E. (#139835) AND IS **NOT TO BE USED FOR CONSTRUCTION.**

CITY OF HOUSTON
HOUSTON PUBLIC WORKS

LIFT STATION REHABILITATION AND RECONSTRUCTION
BEN'S BRANCH, WOODLAND RIDGE, ELMWOOD HILLS, FOREST SHORES, TRAIL RIVER, RIVERLAWN

CIVIL

WOODLAND RIDGE LIFT STATION STORM SEWER PLAN AND PROFILE

WBS NUMBER	FOR CITY OF HOUSTON USE ONLY
R-000267-0180-3	
DRAWING SCALE	
AS NOTED	
CITY OF HOUSTON PM	
BRENDA JOHNSON P.E.	
SHEET NO. 057 OF 338	

WR-C-08

FILE PATH: K:\Projects\423\77 COH LS Package\00\03 CADD\Plans\Sheets\03 Woodland Ridge\WLR STORM PLAN AND PROFILE.dwg

WOODLAND RIDGE LIFT STATION DETENTION & RESTRICTOR CALCULATIONS

DETENTION:

Disturbed Area	0.0337	ac
Detention Rate (R_d)	0.80	ac-ft/ac
Proposed (final) Impervious Area (A_p) =	0.0337	ac
Existing Impervious Area To Be Removed (A_e) =	0.0044	ac

Required Detention Volume = (Ap * Rd) - (Ae * 0.40 ac-ft/ac)

Total Required Detention Volume =		0.0252	ac-ft
Provided Detention Volume =	12' x 4' x 23' (W x D x L)	=	0.0253 ac-ft

RESTRICTORS:

Low Level Restrictor (25% Flow)

Total Drainage Area =	0.0337	ac
Outflow Rate Allowed for Low Flow QL1 =	0.0168	cfs
Head HL1 (water surface differential) for Low Flow =	0.75	ft
Calculated Low Level Restrictor Size DL =	0.74	in
Provided/Designed Low Level Restrictor Size DL1 =	6	in

High Level Restrictor (75% Flow)

Total Drainage Area =	0.0283	ac
Total Outflow Rate (100%) Q =	0.0566	cfs
Re-calculated Head HL2 (water surface differential) for Low Level Restrictor =	2.75	ft
Re-calculated Low Flow Q L2 for Low Level Restrictor =	2.090	cfs
Outflow Rate Allowed for High Flow Qh1 (75%) =	-2.0338	cfs
Head Hh2 (water surface differential) for High Level Restrictor =	0.75	ft
Calculated High Level Restrictor Size Dh =	#NUM!	in
Provided/Designed High Level Restrictor Size Dh1 (75%) =	N/A	in

No need for High Level Restrictor

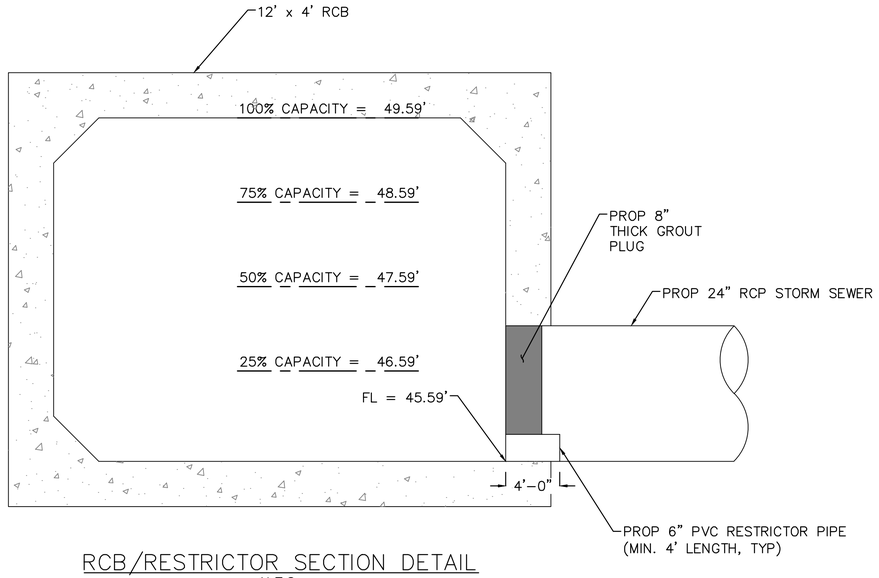

RCB/RESTRICTOR SECTION DETAIL
N.T.S.

NO.	DATE	REVISION	APP.

NOTICE:
FOR YOUR SAFETY, YOU ARE REQUIRED BY TEXAS LAW TO CALL 811 AT LEAST 48 HOURS BEFORE YOU DIG SO THAT UNDERGROUND LINES CAN BE MARKED. THIS SIGNATURE DOES NOT FULFILL YOUR OBLIGATION TO CALL 811

VERIFICATION OF PRIVATE UTILITY LINES

Date

CenterPoint Energy natural gas utilities shown. (Gas service lines are not shown). This signature not be used for conflict verification.

Signature valid for six months.

Date

CenterPoint Energy/UNDERGROUND Electrical Facilities Verification ONLY. (This signature verifies existing underground facilities – not to be used for conflict verification)

Signature valid for six months.

Date

Approved for AT&T underground conduit facilities only.
Signature valid for one year.

PAPE–DAWSON
2107 CITYWEST BLVD, 3RD FLR I HOUSTON, TX 77042 I 713.428.2400
TEXAS ENGINEERING FIRM #470 I TEXAS SURVEYING FIRM #10028800

PAPE–DAWSON
2107 CITYWEST BOULEVARD
3RD FLR
HOUSTON, TEXAS 77402
713–428–2400
TX FIRM #470

SURVEYED BY:
PAPE–DAWSON
FB NO. 24–018

THIS DOCUMENT IS RELEASED FOR INTERIM REVIEW UNDER THE AUTHORIZATION OF AMIRHOSSEIN SHOKOUHI, P.E. (#139835) AND IS **NOT TO BE USED FOR CONSTRUCTION.**

CITY OF HOUSTON
HOUSTON PUBLIC WORKS

LIFT STATION REHABILITATION AND RECONSTRUCTION
BEN'S BRANCH, WOODLAND RIDGE, ELMWOOD HILLS, FOREST SHORES, TRAIL RIVER, RIVERLAWN

CIVIL

WOODLAND RIDGE DRAINAGE CALCULATIONS

WBS NUMBER	FOR CITY OF HOUSTON USE ONLY
R–000267–0180–3	
DRAWING SCALE	
AS NOTED	
CITY OF HOUSTON PM	
BRENDA JOHNSON P.E.	
SHEET NO. 058 OF 338	

WR–C–09

FILE PATH: K:\Projects\423\77 COH LS Package\00\03 CADD\Plans\Sheets\03 Woodland Ridge\WLR DRAINAGE CALULATIONS.dwg

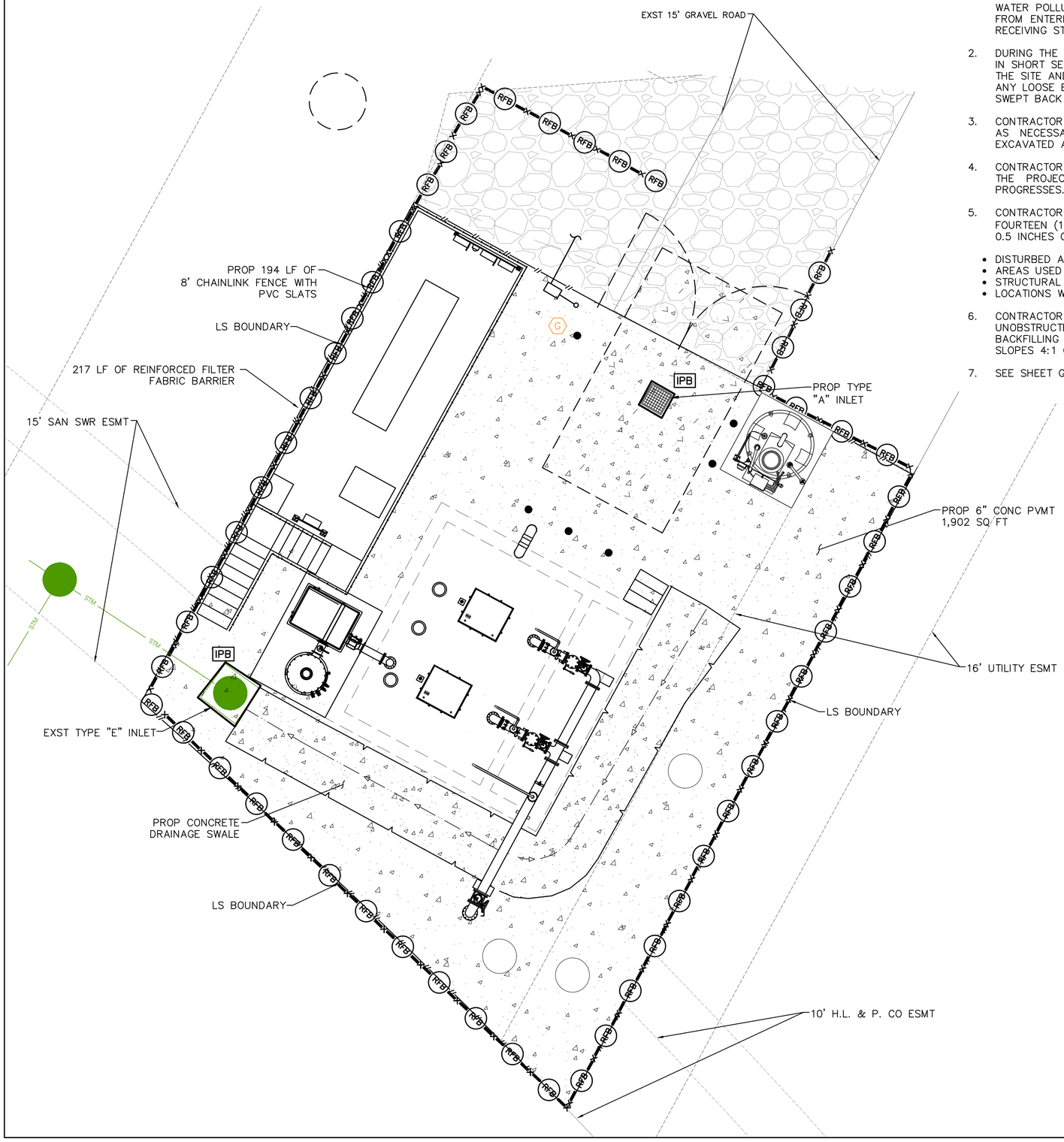

COH SWPPP NOTES:

1. CONTRACTOR SHALL IMPLEMENT INLET PROTECTION DEVICES AND REINFORCED FILTER FABRIC BARRIER ALONG ROAD AND SIDE DITCHES AT LOCATIONS SHOWN ON THE TYPICAL STORM WATER POLLUTION PREVENTION (SWPP) PLANS TO KEEP SILT AND OR EXCAVATED MATERIALS FROM ENTERING INTO THE STORM WATER INLETS AND DITCHES EVENTUALLY POLLUTING THE RECEIVING STORM.
2. DURING THE EXCAVATION PHASE OF THE PROJECT, CONTRACTOR SHALL SCHEDULE THE WORK IN SHORT SEGMENTS SO THAT EXCAVATION MATERIAL CAN BE QUICKLY HAULED AWAY FROM THE SITE AND TO PREVENT IT FROM STAYING UNCOLLECTED ON THE EXISTING PAVEMENT. ANY LOOSE EXCAVATED MATERIAL WHICH FALLS ON PAVEMENTS OR DRIVEWAYS SHALL BE SWEPT BACK INTO THE EXCAVATED AREA.
3. CONTRACTOR SHALL CLEAN UP THE EXISTING STREET INTERSECTIONS AND DRIVEWAYS DAILY, AS NECESSARY, TO REMOVE ANY EXCESS MUD, SILT OR ROCK TRACKED FORM THE EXCAVATED AREA.
4. CONTRACTOR SHALL FOLLOW GOOD HOUSEKEEPING PRACTICES DURING THE CONSTRUCTION OF THE PROJECT, ALWAYS CLEANING UP DIRT AND LOOSE MATERIAL AS CONSTRUCTION PROGRESSES.
5. CONTRACTOR TO INSPECT AND MAINTAIN THE AREAS LISTED BELOW AT LEAST ONCE EVERY FOURTEEN (14) CALENDAR DAYS AND WITHIN 24 HOURS OF THE END OF A STORM EVENT OF 0.5 INCHES OR GREATER.
   - DISTURBED AREAS OF THE CONSTRUCTION SITE THAT HAVE NOT BEEN FINALLY STABILIZED.
   - AREAS USED FOR STORAGE OF MATERIALS THAT ARE EXPOSED TO PRECIPITATION.
   - STRUCTURAL CONTROL MEASURES.
   - LOCATIONS WHERE VEHICLES ENTER OR EXIT THE SITE.
6. CONTRACTOR TO BE RESPONSIBLE TO MAINTAIN EXISTING DITCHES AND OR CULVERTS FOR UNOBSTRUCTED DRAINAGE AT ALL TIMES. WHERE SODDING IS DISTURBED BY EXCAVATION ON BACKFILLING OPERATIONS, SUCH AREAS SHALL BE REPLACED BY SEEDING OR SODDING. SLOPES 4:1 OR STEEPER SHALL BE REPLACED BY BLOCK SODDING.
7. SEE SHEET GC-02 FOR DETAILS.

TEMPORARY BENCHMARK DESCRIPTION

TBM-520 CUT "X" IN CURB INLET - ELEVATION 53.43'
TBM-521 CUT "X" IN CONCRETE PAD - ELEVATION 54.90'

LEGEND

- RFB — REINFORCED FILTER FABRIC BARRIER
- PROPOSED PAVEMENT
- EXISTING GRAVEL AREA
- IPB — INLET PROTECTION BARRIER

SCALE: 1"= 5'

0' 5' 10' 15'

NO.	DATE	REVISION	APP.

NOTICE:
FOR YOUR SAFETY, YOU ARE REQUIRED BY TEXAS LAW TO CALL 811 AT LEAST 48 HOURS BEFORE YOU DIG SO THAT UNDERGROUND LINES CAN BE MARKED. THIS SIGNATURE DOES NOT FULFILL YOUR OBLIGATION TO CALL 811

VERIFICATION OF PRIVATE UTILITY LINES

Date

CenterPoint Energy natural gas utilities shown. (Gas service lines are not shown). This signature not be used for conflict verification.

Signature valid for six months.

Date

CenterPoint Energy/UNDERGROUND Electrical Facilities Verification ONLY. (This signature verifies existing underground facilities – not to be used for conflict verification)

Signature valid for six months.

Date

Approved for AT&T underground conduit facilities only.
Signature valid for one year.

PAPE-DAWSON
2107 CITYWEST BLVD, 3RD FLR I HOUSTON, TX 77042 I 713.428.2400
TEXAS ENGINEERING FIRM #470 I TEXAS SURVEYING FIRM #10028800

PAPE-DAWSON
2107 CITYWEST BOULEVARD
3RD FLR
HOUSTON, TEXAS 77402
713-428-2400
TX FIRM #470

SURVEYED BY:
PAPE-DAWSON
FB NO. 24-018

THIS DOCUMENT IS RELEASED FOR INTERIM REVIEW UNDER THE AUTHORIZATION OF AMIRHOSSEIN SHOKOUHI, P.E. (#130835) AND IS **NOT TO BE USED FOR CONSTRUCTION.**

CITY OF HOUSTON
HOUSTON PUBLIC WORKS

LIFT STATION REHABILITATION AND RECONSTRUCTION
BEN'S BRANCH, WOODLAND RIDGE, ELMWOOD HILLS, FOREST SHORES, TRAIL RIVER, RIVERLAWN

CIVIL

WOODLAND RIDGE LIFT STATION SWPPP

WBS NUMBER	FOR CITY OF HOUSTON USE ONLY
R-000267-0180-3	
DRAWING SCALE	
AS NOTED	
CITY OF HOUSTON PM	
BRENDA JOHNSON P.E.	
SHEET NO. 059 OF 338	

WR-C-10

FILE PATH: K:\Projects\423\77 COH LS Package\00\03 CADD\Plans\Sheets\03 Woodland Ridge\SWPPP.dwg

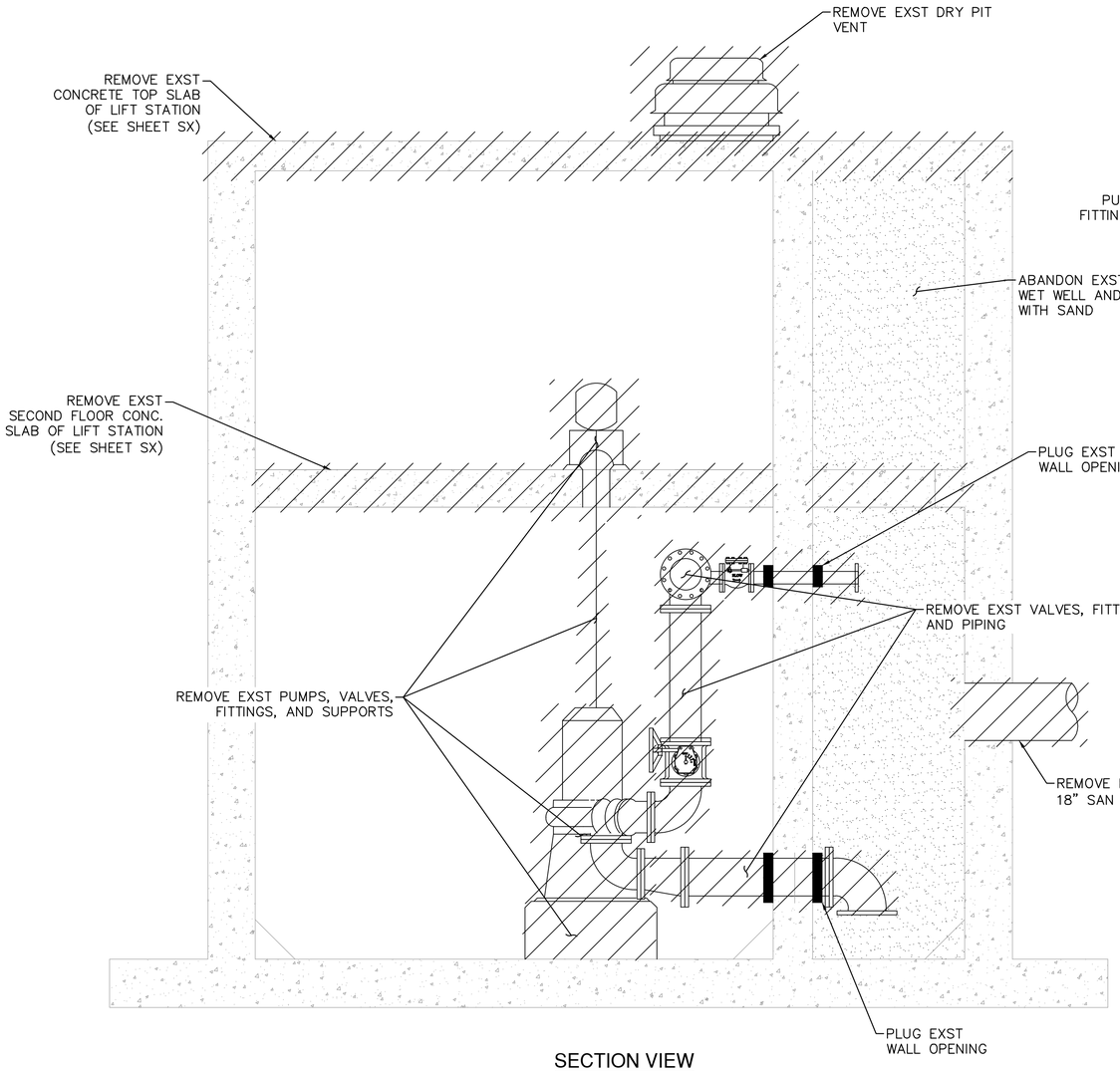

SECTION VIEW

SCALE 1/2"=1'-0"

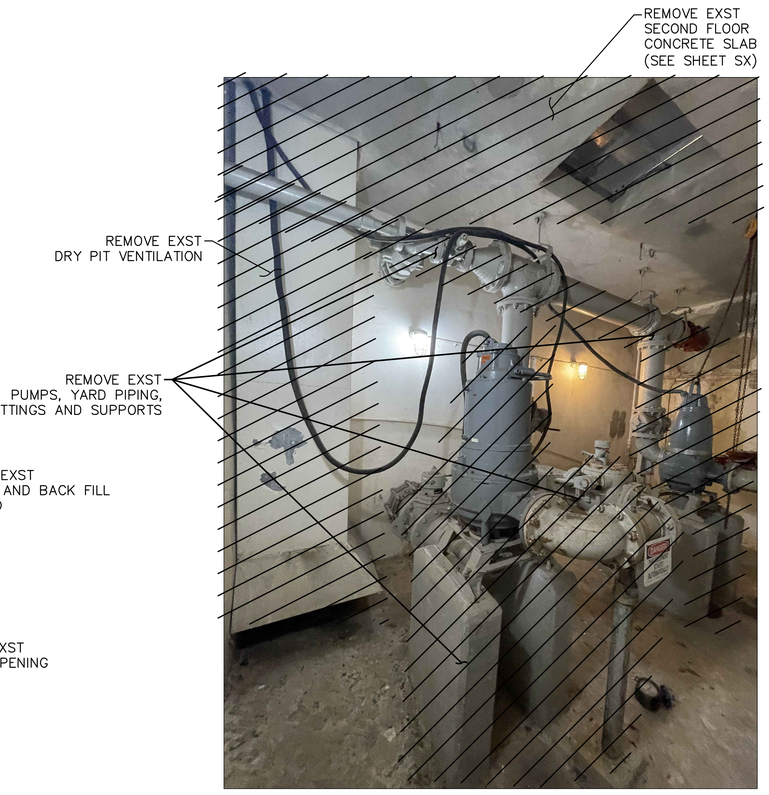

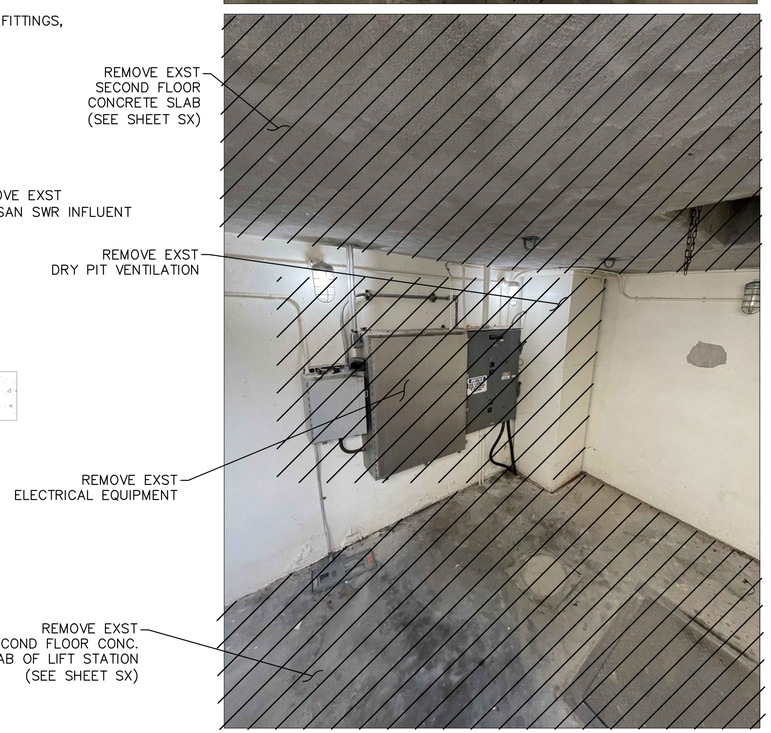

TEMPORARY BENCHMARK DESCRIPTION

TBM-520 CUT "X" IN CURB INLET - ELEVATION 53.43'
TBM-521 CUT "X" IN CONCRETE PAD - ELEVATION 54.90'

LEGEND

TO BE REMOVED

NO.	DATE	REVISION	APP.

NOTICE:

FOR YOUR SAFETY, YOU ARE REQUIRED BY TEXAS LAW TO CALL 811 AT LEAST 48 HOURS BEFORE YOU DIG SO THAT UNDERGROUND LINES CAN BE MARKED. THIS SIGNATURE DOES NOT FULFILL YOUR OBLIGATION TO CALL 811

VERIFICATION OF PRIVATE UTILITY LINES

Date

CenterPoint Energy natural gas utilities shown. (Gas service lines are not shown). This signature not be used for conflict verification.

Signature valid for six months.

Date

CenterPoint Energy/UNDERGROUND Electrical Facilities Verification ONLY. (This signature verifies existing underground facilities - not to be used for conflict verification)

Signature valid for six months.

Date

Approved for AT&T underground conduit facilities only.
Signature valid for one year.

PAPE-DAWSON

2107 CITYWEST BLVD, 3RD FLR I HOUSTON, TX 77042 I 713.428.2400

TEXAS ENGINEERING FIRM #470 I TEXAS SURVEYING FIRM #10028800

PAPE-DAWSON
2107 CITYWEST BOULEVARD
3RD FLR
HOUSTON, TEXAS 77402
713-428-2400
TX FIRM #470

SURVEYED BY:
PAPE-DAWSON
FB NO. 24-018

THIS DOCUMENT IS RELEASED FOR INTERIM REVIEW UNDER THE AUTHORIZATION OF AMIRHOSSEIN SHOKOUHI, P.E. (#139835) AND IS **NOT TO BE USED FOR CONSTRUCTION.**

CITY OF HOUSTON

HOUSTON PUBLIC WORKS

LIFT STATION REHABILITATION AND RECONSTRUCTION
BEN'S BRANCH, WOODLAND RIDGE, ELMWOOD HILLS, FOREST SHORES, TRAIL RIVER, RIVERLAWN

CIVIL

WOODLAND RIDGE LIFT STATION DEMOLITION - SECTION

WBS NUMBER	FOR CITY OF HOUSTON USE ONLY
R-000267-0180-3	
DRAWING SCALE	
AS NOTED	
CITY OF HOUSTON PM	
BRENDA JOHNSON P.E.	
SHEET NO. 064 OF 338	

WR-M-01

FILE PATH: K:\Projects\423\77 COH LS Package\00\03 CADD\Plans\Sheets\03 Woodland Ridge\WR DEMO SECTIONS.dwg

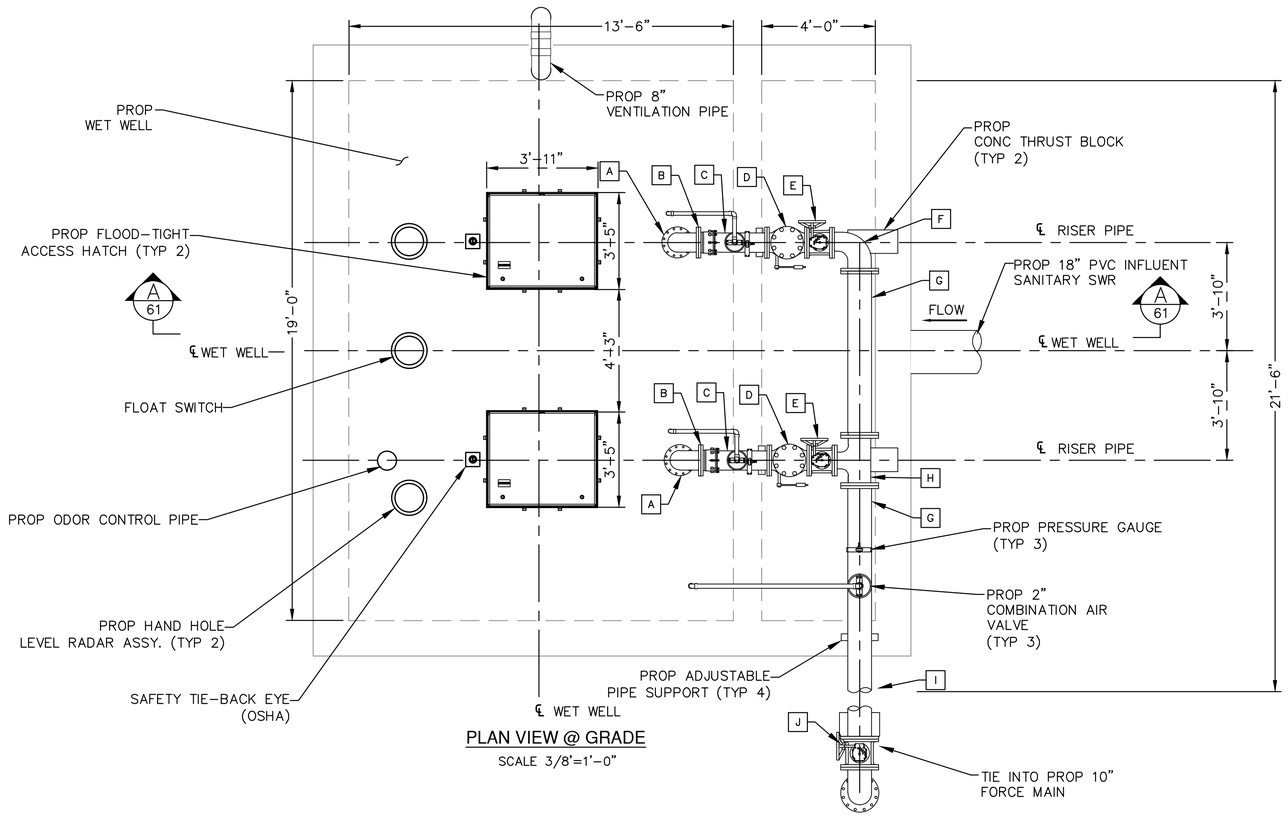

PLAN VIEW @ GRADE

SCALE 3/8"=1'-0"

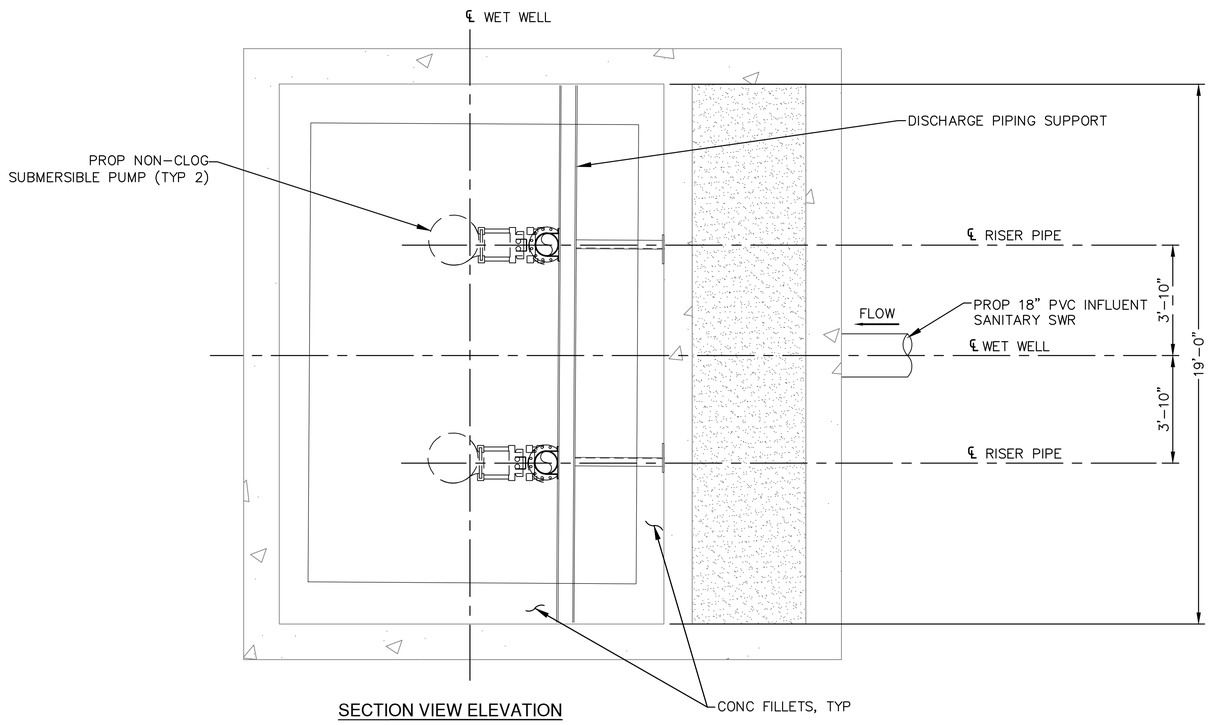

SECTION VIEW ELEVATION

SCALE 3/8"=1'-0"

PIPE AND FITTING SCHEDULE

MARK	DESCRIPTION	CONNECTION
A	8"x90° BEND	FLG/FLG
B	8" RESTRAINED FLANGED COUPLING ADAPTOR	FCA501 OR APPROVED EQUAL
C	8" SPOOL	FLG/FLG
D	8" CHECK VALVE	FLG
E	8" PLUG VALVE	FLG
F	8"x10"x90° REDUCING BEND	FLG/FLG
G	10" SPOOL	FLG/FLG
H	10"x8" REDUCING TEE	FLG
I	10" PLUG VALVE	FLG
J	10"x90° BEND	FLG

LIFT STATION NOTES:

1. ALL SUPPORT BRACKETS, HARDWARE, ANCHORS, BOLTS, ETC. INSIDE WET WELL SHALL BE TYPE 316 STAINLESS STEEL.
2. ALL INTERIOR SURFACES OF CONC WET WELL SHALL BE COATED WITH AN 80 MIL (MIN.) COAT OF RAVEN 405 ULTRA HIGH BUILD EPOXY COATING, SPRAY WALL EPOXY COATING, OR APPROVED EQUAL.
3. ALL PUMP DISCHARGE PIPING IN WET WELL AND VALVE PAD TO BE FLANGED (INSIDE WET WELL/PAD) OR TR FLEX RESTRAINED MECHANICAL JOINT (WHEN BURIED) DUCTILE IRON PIPING. ALL DUCTILE IRON PIPING SHALL BE EPOXY LINED WITH TNEMEC SERIES 431 PERMA-SHIELD PL CERAMIC EPOXY OR APPROVED EQUAL.
4. ALL EXPOSED DUCTILE IRON PIPING, FITTINGS, AND VALVES SHALL BE SANDBLASTED AND COATED WITH TWO (2) COATS OF TNEMEC SERIES 27WB TYPOXY APPLIED AT 6.0 TO 8.0 DRY MILS AND TOPCOATED WITH TNEMEC SERIES 740 UVX APPLIED AT 3.0 TO 5.0 DRY MILS. FINAL COLOR TO BE APPROVED BY THE DISTRICT. SHOP PRIMING WITH TNEMEC SERIES N140 IS ACCEPTABLE. BITUMASTIC COATING SHALL NOT BE APPLIED TO EXPOSED DI PIPING.
5. ALL BURIED DUCTILE IRON PIPING, FITTINGS, AND VALVES SHALL BE WRAPPED WITH A POLYETHYLENE ENCASEMENT IN ACCORDANCE WITH THE LATEST REVISION OF AWWA C105.
6. ALL MECHANICAL JOINT FITTINGS TO BE RESTRAINED USING SERIES 1100 OR 2000PV MEGALUG JOINT RESTRAINTS.
7. PUMP SPACING DIMENSIONS SHOWN ARE APPROXIMATE. ACTUAL DIMENSIONS SHALL BE DETERMINED BY SPECIFIC PUMP MANUFACTURER.
8. PRIMARY LEVEL CONTROL WILL BE PROVIDED BY A SUBMERSIBLE LEVEL TRANSDUCER WITH OPERATION POINTS AS DETERMINED BY ENGINEER. MULTITRODE PROBES ARE FOR BACKUP OPERATION ONLY. REFER TO ELECTRICAL SPECIFICATIONS FOR EQUIPMENT INFORMATION.
9. FLOOD-TIGHT ACCESS HATCH AS SHOWN OR AS REQUIRED BY PUMP MANUFACTURER. DIMENSION MAY VARY PER HATCH MANUFACTURER.

NO.	DATE	REVISION	APP.

NOTICE:
FOR YOUR SAFETY, YOU ARE REQUIRED BY TEXAS LAW TO CALL 811 AT LEAST 48 HOURS BEFORE YOU DIG SO THAT UNDERGROUND LINES CAN BE MARKED. THIS SIGNATURE DOES NOT FULFILL YOUR OBLIGATION TO CALL 811

VERIFICATION OF PRIVATE UTILITY LINES

Date

CenterPoint Energy natural gas utilities shown. (Gas service lines are not shown). This signature not be used for conflict verification.

Signature valid for six months.

Date

CenterPoint Energy/UNDERGROUND Electrical Facilities Verification ONLY. (This signature verifies existing underground facilities – not to be used for conflict verification)

Signature valid for six months.

Date

Approved for AT&T underground conduit facilities only.
Signature valid for one year.

PAPE-DAWSON
2107 CITYWEST BLVD, 3RD FLR I HOUSTON, TX 77042 I 713.428.2400
TEXAS ENGINEERING FIRM #470 I TEXAS SURVEYING FIRM #10028800

PAPE-DAWSON
2107 CITYWEST BOULEVARD
3RD FLR
HOUSTON, TEXAS 77402
713-428-2400
TX FIRM #470

SURVEYED BY:
PAPE-DAWSON
FB NO. 24-018

THIS DOCUMENT IS RELEASED FOR INTERIM REVIEW UNDER THE AUTHORIZATION OF AMIRHOSSEIN SHOKOUHI, P.E. (#139835) AND IS **NOT TO BE USED FOR CONSTRUCTION.**

CITY OF HOUSTON
HOUSTON PUBLIC WORKS

LIFT STATION REHABILITATION AND RECONSTRUCTION
BEN'S BRANCH, WOODLAND RIDGE, ELMWOOD HILLS, FOREST SHORES, TRAIL RIVER, RIVERLAWN

MECHANICAL

WOODLAND RIDGE LIFT STATION PROPOSED PLAN

WBS NUMBER	FOR CITY OF HOUSTON USE ONLY
R-000267-0180-3	
DRAWING SCALE	
AS NOTED	
CITY OF HOUSTON PM	
BRENDA JOHNSON P.E.	
SHEET NO. 065 OF 338	

WR-M-02

FILE PATH: K:\Projects\423\77 COH LS Package\00\03 CADD\Plans\Sheets\03 Woodland Ridge\WLR PROP PLAN VIEW-M-4237700.dwg

NOTES:

1. SLEEVED OPENING, SEAL W/ LINK-SEAL OR APPROVED EQUAL. AT TOP OF SLAB FILL VOID AROUND SEAL W/ GROUT & RECESS APPROX ¼" BELOW TOP OF SLAB. (SEE SHEET GM-03)
2. SLEEVED WET WELL PENETRATION (SEE SHEET GM-03)
3. PROP ALL PUMPS OFF LEVEL 1 FT HIGHER THE PUMP MIN SUBMERGE LEVEL
4. UPSTREAM MANHOLE OVERFLOW ELEVATION PROVIDED BY CITY OF HOUSTON WASTEWATER PLANNING DEPARTMENT
5. HIGH HIGH WATER LEVEL ALARM ELEVATION TO PROVIDE MINIMUM 2 HOUR RESPONSE TIME PRIOR TO UPSTREAM MANHOLE OVERFLOW ELEVATION.
6. SEE SHEET WR-C-03 FOR LIFT STATION NOTES

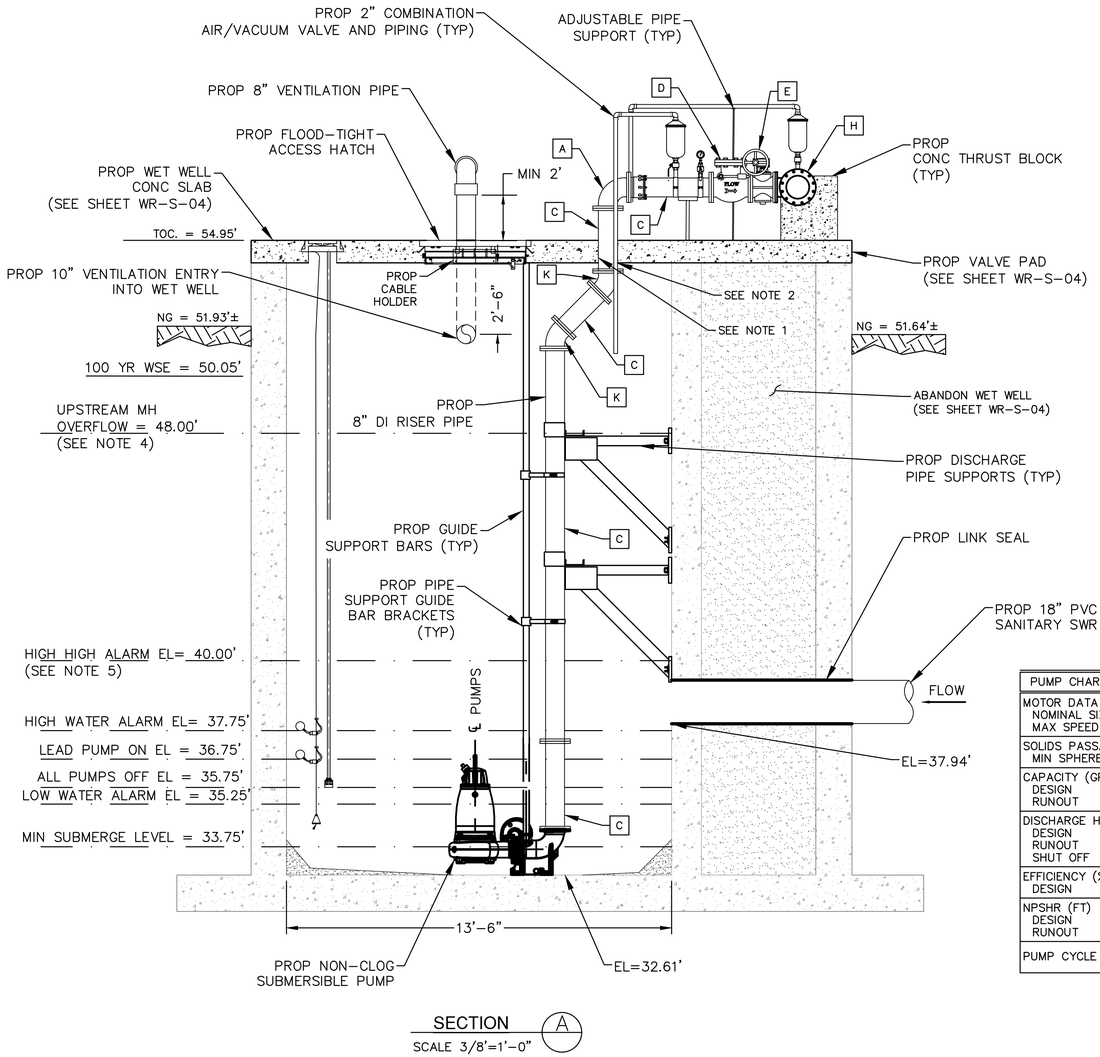

SECTION A
SCALE 3/8"=1'-0"

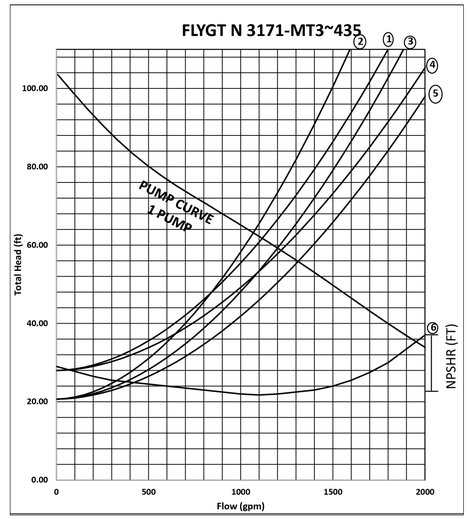

PUMP OPERATION CURVES

PUMP CURVE NOTES:

1. LOW NORMAL OPERATING LEVEL C=120 – DESIGN.
2. HIGH NORMAL OPERATING LEVEL C=100 – INFORMATION ONLY
3. HIGH NORMAL OPERATING LEVEL C=120 – DESIGN
4. HIGH NORMAL OPERATING LEVEL C=140 – INFORMATION ONLY
5. EMERGENCY FLOODED OPERATING LEVEL C=140 – MAXIMUM DISCHARGE
6. NET POSITIVE SUCTION HEAD AVAILABLE (NPSHA) BASED ON NORMAL OPERATING WATER LEVELS
7. PUMP CURVES ARE MODIFIED FOR STATION LOSSES.

PUMP DATA TABLE

PUMP CHARACTERISTICS	PUMP NO. 1	PUMP NO. 2	PUMP NO. 3
MOTOR DATA NOMINAL SIZE (HP) MAX SPEED (RPM)	 25 1770	 25 1770	 25 1770
SOLIDS PASSAGE MIN SPHERE (IN)	 <3	 <3	 <3
CAPACITY (GPM) DESIGN RUNOUT	 1120 2338	 1120 2338	 1120 2338
DISCHARGE HEAD (FT) DESIGN RUNOUT SHUT OFF	 60 24.3 103.5	 60 24.3 103.5	 60 24.3 103.5
EFFICIENCY (%) DESIGN	 79	 79	 79
NPSHR (FT) DESIGN RUNOUT	 21.97 12.5	 21.97 12.5	 21.97 12.5
PUMP CYCLE TIME	6	6	6

STATION OPERATION TABLES

RISING LEVEL CYCLE

WATER LEVEL DEPTH	WATER LEVEL ELEVATION	ACTION	PUMP(S) IN OPERATION
3.14	35.75	PUMPS OFF LEVEL – NO ACTION	ALL PUMPS ARE OFF
4.14	36.75	LEAD PUMP TURNS ON	LEAD PUMP ON
5.14	37.75	HIGH WATER ALARM ON	HIGH WATER ALARM SOUND
7.39	40.00	HIGH HIGH LEVEL ALARM (FLOAT ON LEVEL)	ALL PUMPS ON (FLOATS)

FALLING LEVEL CYCLE

WATER LEVEL DEPTH	WATER LEVEL ELEVATION	ACTION	PUMP(S) IN OPERATION
6.89	39.50	FLOAT OFF LEVEL	ALL PUMPS OFF (FLOATS)
4.64	37.25	HIGH WATER LEVEL ALARM OFF	LEAD PUMP ON
3.14	35.75	LEAD PUMP TURNS OFF	ALL PUMPS STOPPED – STANDBY PUMP SWITCHES TO LEAD PUMP
3.00	35.25	LOW LEVEL ALARM	–

PIPE AND FITTING SCHEDULE

MARK	DESCRIPTION	CONNECTION
A	8"x90° BEND	FLG/FLG
B	8" RESTRAINED FLANGED COUPLING ADAPTOR	FCA501 OR APPROVED EQUAL
C	8" SPOOL	FLG/FLG
D	8" CHECK VALVE	FLG
E	8" PLUG VALVE	FLG
F	8"x10"x90° REDUCING BEND	FLG/FLG
G	10" SPOOL	FLG/FLG
H	8"x10" REDUCING TEE	FLG
I	10" PLUG VALVE	FLG
J	10"x45° BEND	FLG
K	8"x45° BEND	FLG
L	10"x45° BEND	FLG/FLG
M	10"x8" REDUCER	FLG/FLG

NO.	DATE	REVISION	APP.

NOTICE:
FOR YOUR SAFETY, YOU ARE REQUIRED BY TEXAS LAW TO CALL 811 AT LEAST 48 HOURS BEFORE YOU DIG SO THAT UNDERGROUND LINES CAN BE MARKED. THIS SIGNATURE DOES NOT FULFILL YOUR OBLIGATION TO CALL 811

VERIFICATION OF PRIVATE UTILITY LINES

Date

CenterPoint Energy natural gas utilities shown. (Gas service lines are not shown). This signature not be used for conflict verification.

Signature valid for six months.

Date

CenterPoint Energy/UNDERGROUND Electrical Facilities Verification ONLY. (This signature verifies existing underground facilities – not to be used for conflict verification)

Signature valid for six months.

Date

Approved for AT&T underground conduit facilities only.
Signature valid for one year.

PAPE-DAWSON
2107 CITYWEST BLVD, 3RD FLR I HOUSTON, TX 77042 I 713.428.2400
TEXAS ENGINEERING FIRM #470 I TEXAS SURVEYING FIRM #10028800

PAPE-DAWSON
2107 CITYWEST BOULEVARD 3RD FLR
HOUSTON, TEXAS 77402
713-428-2400
TX FIRM #470

SURVEYED BY:
PAPE-DAWSON
FB NO. 24-018

THIS DOCUMENT IS RELEASED FOR INTERIM REVIEW UNDER THE AUTHORIZATION OF AMIRHOSSEIN SHOKOUHI, P.E. (#139835) AND IS **NOT TO BE USED FOR CONSTRUCTION.**

CITY OF HOUSTON
HOUSTON PUBLIC WORKS

LIFT STATION REHABILITATION AND RECONSTRUCTION
BEN'S BRANCH, WOODLAND RIDGE, ELMWOOD HILLS, FOREST SHORES, TRAIL RIVER, RIVERLAWN

MECHANICAL

WOODLAND RIDGE LIFT STATION
PROPOSED SECTION

WBS NUMBER	FOR CITY OF HOUSTON USE ONLY
R-000267-0180-3	
DRAWING SCALE	
AS NOTED	
CITY OF HOUSTON PM	
BRENDA JOHNSON P.E.	
SHEET NO. 066 OF 338	

WR-M-03

FILE PATH: K:\Projects\423\77 COH LS Package\00\03 CADD\Plans\Sheets\03 Woodland Ridge\WLR PROP PLAN VIEW-M-4237700.dwg

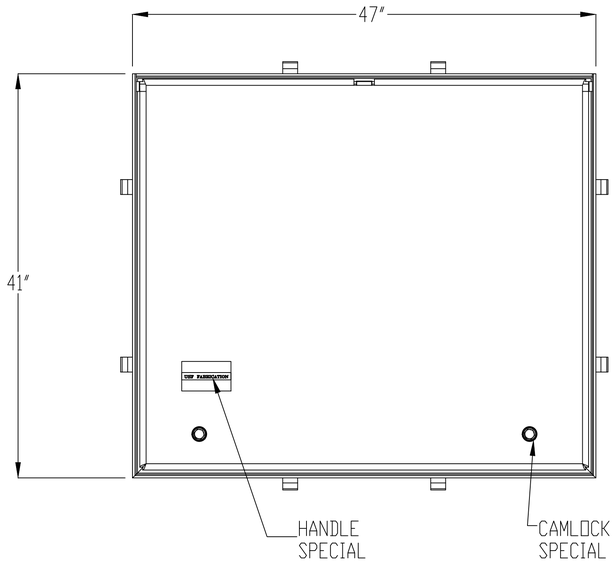

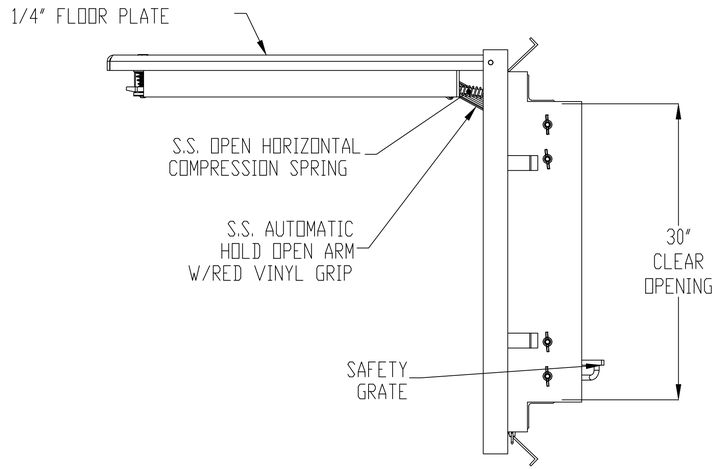

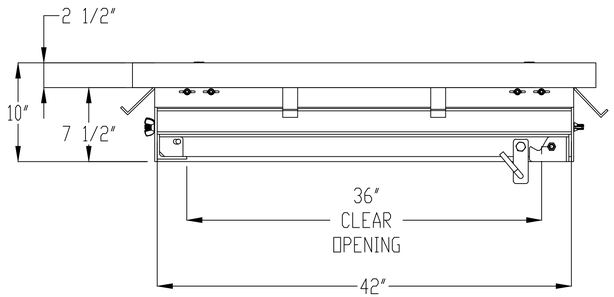

NOTES:
1- MATERIAL: ALUMINUM
MILL FINISH
2- LOADING LOADING: 1560 LBS. PER SQ. FT.
3- 316 STAINLESS STEEL BOLTS & NUTS
4- AREA OF FRAME IN CONTACT WITH CONCRETE
TO BE PAINTED WITH BITUMINOUS COATING
5- THIS DOOR IS DESIGNED TO BE FLOOD TIGHT.
6- GASKET AND FRAME MUST BE FREE OF ANY DIRT,
ROCKS OR OTHER DEBRIS AND CAMLOCKS MUST BE
PROPERLY ENGAGED TO ENSURE MAXIMUM FLOOD RESISTANCE.

NO.	DATE	REVISION	APP.

NOTICE:
FOR YOUR SAFETY, YOU ARE REQUIRED BY TEXAS LAW TO CALL 811 AT LEAST 48 HOURS BEFORE YOU DIG SO THAT UNDERGROUND LINES CAN BE MARKED. THIS SIGNATURE DOES NOT FULFILL YOUR OBLIGATION TO CALL 811

VERIFICATION OF PRIVATE UTILITY LINES

Date

CenterPoint Energy natural gas utilities shown. (Gas service lines are not shown). This signature not be used for conflict verification.

Signature valid for six months.

Date

CenterPoint Energy/UNDERGROUND Electrical Facilities Verification ONLY. (This signature verifies existing underground facilities – not to be used for conflict verification)

Signature valid for six months.

Date

Approved for AT&T underground conduit facilities only. Signature valid for one year.

PAPE–DAWSON
2107 CITYWEST BLVD, 3RD FLR I HOUSTON, TX 77042 I 713.428.2400
TEXAS ENGINEERING FIRM #470 I TEXAS SURVEYING FIRM #10028800

PAPE–DAWSON
2107 CITYWEST BOULEVARD
3RD FLR
HOUSTON, TEXAS 77402
713–428–2400
TX FIRM #470

SURVEYED BY:
PAPE–DAWSON
FB NO. 24–018

THIS DOCUMENT IS RELEASED FOR INTERIM REVIEW UNDER THE AUTHORIZATION OF AMIRHOSSEIN SHOKOUHI, P.E. (#139835) AND IS **NOT TO BE USED FOR CONSTRUCTION.**

CITY OF HOUSTON
HOUSTON PUBLIC WORKS

LIFT STATION REHABILITATION AND RECONSTRUCTION
BEN'S BRANCH, WOODLAND RIDGE, ELMWOOD HILLS, FOREST SHORES, TRAIL RIVER, RIVERLAWN

CIVIL

WOODLAND RIDGE LIFT STATION FLOOD–TIGHT ACCESS HATCH DETAIL

WBS NUMBER	FOR CITY OF HOUSTON USE ONLY
R–000267–0180–3	
DRAWING SCALE	
AS NOTED	
CITY OF HOUSTON PM	
BRENDA JOHNSON P.E.	
SHEET NO. OF 338	

INTERPRET DIMENSIONS AND TOLERANCES PER ASME Y14.5M

BREAK ALL SHARP CORNERS & EDGES TO 0.01

TOLERANCES UNLESS OTHERWISE SPECIFIED:
INCHES = +/- 1/16
1/16 = +/- 1/32
1/32 = +/- 1/64

COPYRIGHT © 2025 ALL RIGHTS RESERVED

U.S.F. FABRICATION INC.
HIALEAH, FLORIDA

HATCH Z-APS 30X42
ASSEMBLY (ZERO LEAK)

DRAWN BY:	SCALE: 1:12	SHEET 2 OF 2	DATE: 9/25/25	
APP'D BY: JG	DWG. NO: 1000290582		SHEET SIZE: B	REV: 0

THIS DOCUMENT IS THE PROPERTY OF U.S.F. FABRICATION, INC AND CONTAINS PROPRIETARY INFORMATION. IT SHALL NOT BE MODIFIED, COPIED, FURNISHED NOR DISTRIBUTED (IN WHOLE OR IN PART) WITHOUT PROPER AUTHORIZATION OF U.S.F. FABRICATION, INC.

FILE PATH: K:\Projects\423\77 COH LS Package\00\03 CADD\Plans\Sheets\03 Woodland Ridge\WLR ACCESS HATCH DETAIL.dwg

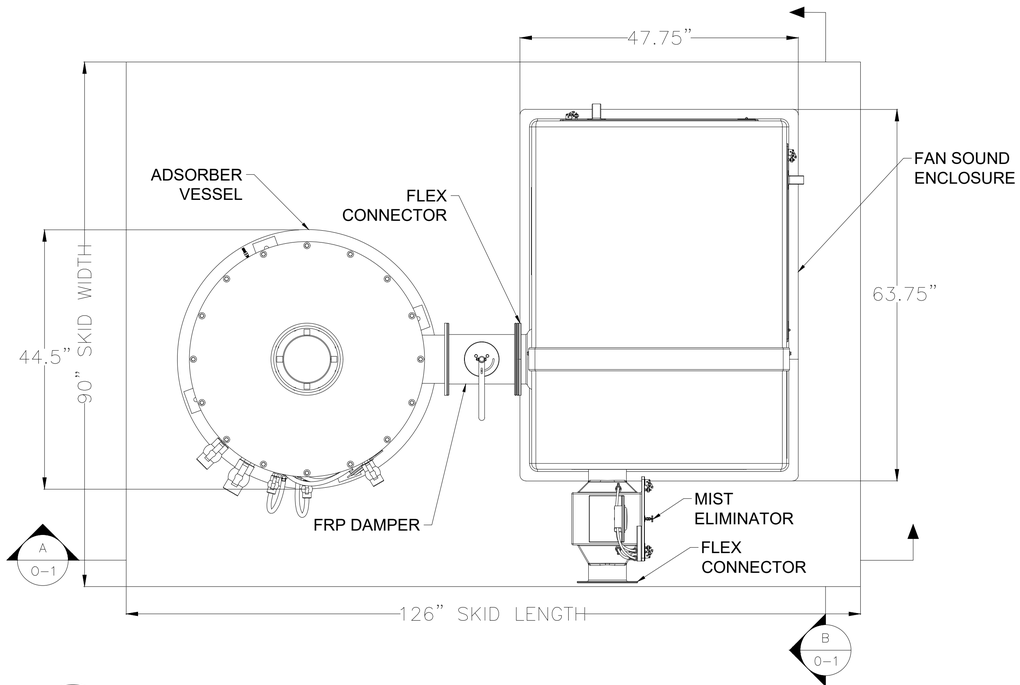

1 / O-1 ACTIVATED CARBON ODOR CONTROL FACILITY – PLAN VIEW

SCALE

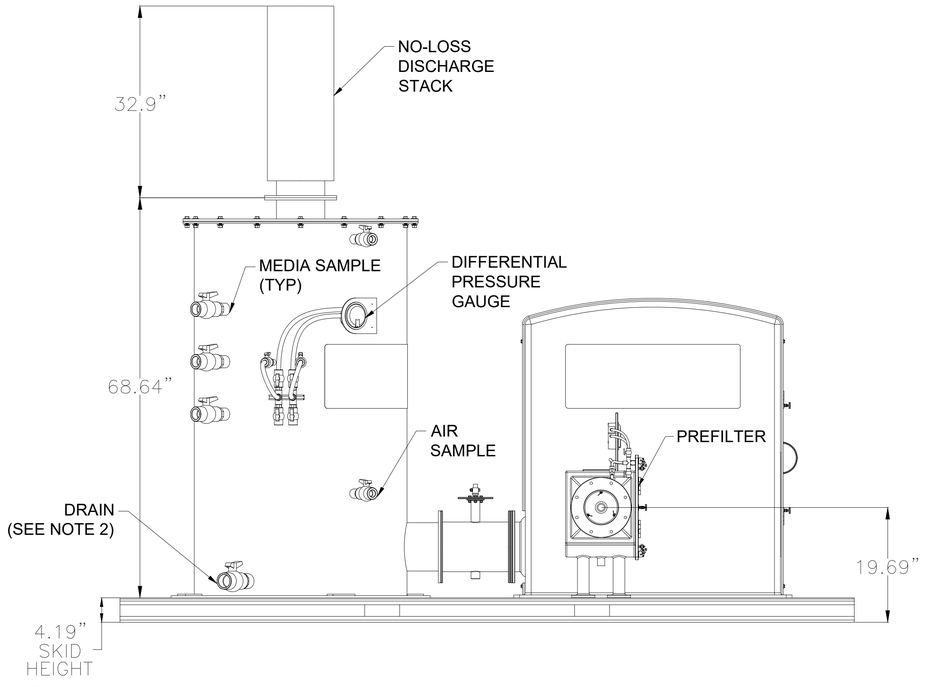

A / O-1 ACTIVATED CARBON ODOR CONTROL FACILITY – SECTION VIEW

SCALE

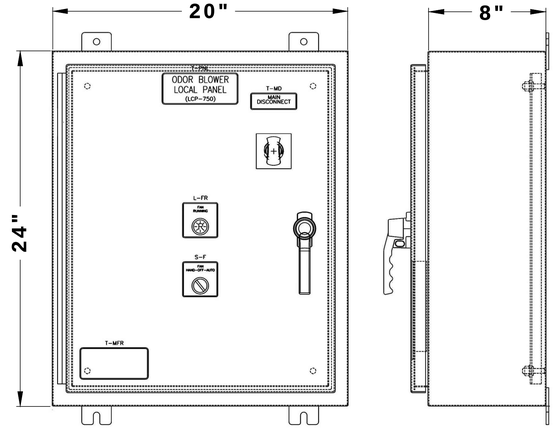

NOTE: PANEL SHALL BE SUPPLIED, LOCATED, AND INSTALLED MINIMUM THREE FEET AWAY FROM BLOWER, OR ODOR CONTROL VESSEL.

2 / O-1 ACTIVATED CARBON CONTROL PANEL

NTS

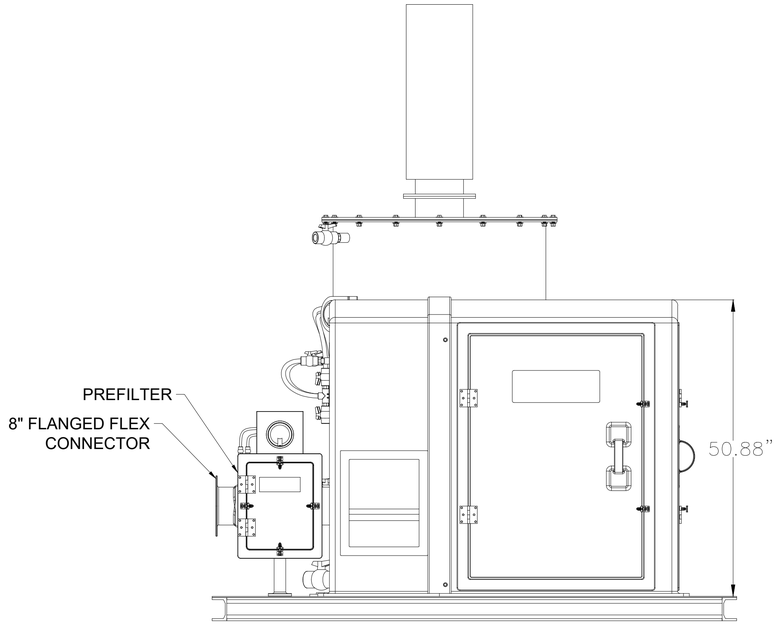

B / O-1 ACTIVATED CARBON ODOR CONTROL FACILITY – SECTION VIEW

SCALE

NOTES:

1. SKID IS 10'–6" LONG BY 7'–6" WIDE. THE SKID AREA CONTAINS THE ACTIVATED CARBON ODOR CONTROL FACILITY.
2. DRAIN PORT TO BE CONNECTED TO DRAIN TO SEWER WITH 6" TRAP AS SHOWN ON SITE PLAN

NO.	DATE	REVISION	APP.

0' 1' 2' 3'

1" = 1'-0" (FULL)

PAPE–DAWSON

2107 CITYWEST BLVD, 3RD FLR I HOUSTON, TX 77042 I 713.428.2400

TEXAS ENGINEERING FIRM #470 I TEXAS SURVEYING FIRM #10028800

V&A Consulting Engineers, Inc.
15720 Park Row, Suite 500
Houston, TX 77084 Tel. (713) 568-9067
F-9154
V&A Project No.: 22-0426

SURVEYED BY:
PAPE–DAWSON ENGINEERS
FB NO. 24–018

INTERIM REVIEW ONLY
Document incomplete; not intended for regulatory approval, permit, or construction.
JAMES VAUGHAN HARSHMAN
Engineer
153247
Registration Number
09/02/2025
Date

V&A CONSULTING ENGINEERS, INC.
Texas Registered Engineering Firm
F-9154

CITY OF HOUSTON
HOUSTON PUBLIC WORKS

LIFT STATION REHABILITATION AND RECONSTRUCTION
BEN'S BRANCH, WOODLAND RIDGE, ELMWOOD HILLS, FOREST SHORES, TRAIL RIVER, RIVERLAWN

WOODLAND RIDGE LIFT STATION ODOR CONTROL SYSTEM CARBON ADSORBER PLAN AND SECTION VIEW

WBS NUMBER	FOR CITY OF HOUSTON USE ONLY
R-000267-0180-3	
DRAWING SCALE	
AS NOTED	
CITY OF HOUSTON PM	
BRENDA JOHNSON P.E.	
SHEET NO. OF	

DWG No. O-1

FILE PATH: E:\Projects\2022\0400 Thru 0499\22-0426 Var City Of Houston\500 Drawings\DESIGN\60%\60% Odor Sheets\03 Woodland Ridge\22-0426 Var City Of Houston Woodland Ridge Odor Control Detail.dwg

ODOR CONTROL SYSTEM ELECTRICAL CONTROL PANEL

LEGEND

- dP-X — Differential Pressure Gauge
- DV-XX — Manual Damper Butterfly Valve
- FC-XX — Flexible Duct Connection
- BV-XX — 2 Way Manual Ball Valve
- FXX_XXX — Flange Connection (size per chart)
- WL_XXX — Water Trap
- Drain

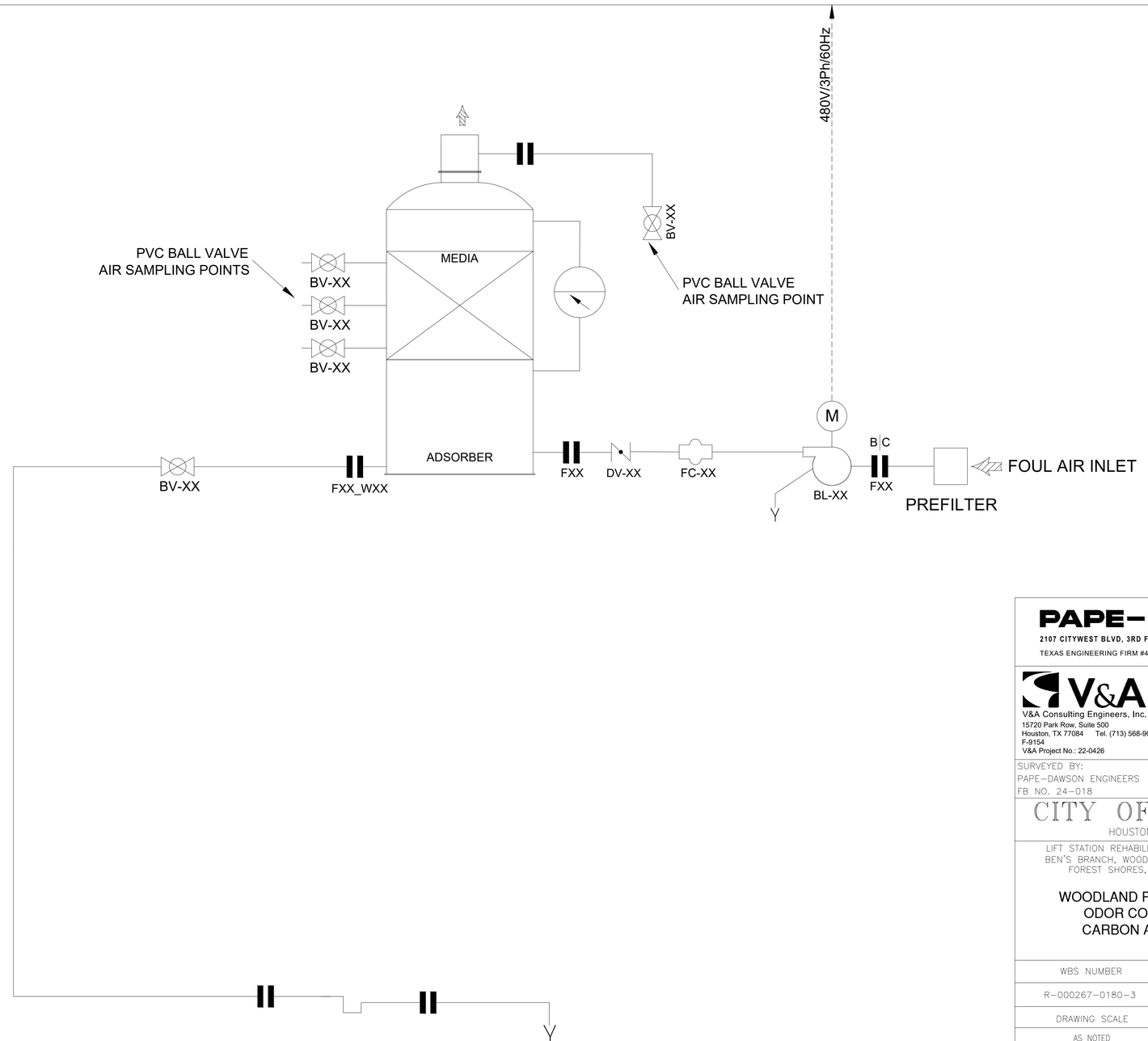

REVISION | NO. | DATE | APP.

PAPE-DAWSON
2107 CITYWEST BLVD, 3RD FLR I HOUSTON, TX 77042 I 713.428.2400
TEXAS ENGINEERING FIRM #470 I TEXAS SURVEYING FIRM #10028800

V&A Consulting Engineers, Inc.
15720 Park Row, Suite 500
Houston, TX 77084 Tel. (713) 568-9067
F-9154
V&A Project No.: 22-0426

INTERIM REVIEW ONLY
Document incomplete: not intended for regulatory approval, permit, or construction.
JAMES VAUGHAN HARSHMAN
Engineer
153247
Registration Number
09/02/2025
Date

SURVEYED BY:
PAPE-DAWSON ENGINEERS
FB NO. 24-018

V&A CONSULTING ENGINEERS, INC.
Texas Registered Engineering Firm
F-9154

CITY OF HOUSTON
HOUSTON PUBLIC WORKS

LIFT STATION REHABILITATION AND RECONSTRUCTION
BEN'S BRANCH, WOODLAND RIDGE, ELMWOOD HILLS,
FOREST SHORES, TRAIL RIVER, RIVERLAWN

WOODLAND RIDGE LIFT STATION
ODOR CONTROL SYSTEM
CARBON ADSORBER P&ID

WBS NUMBER	FOR CITY OF HOUSTON USE ONLY
R-000267-0180-3	
DRAWING SCALE	
AS NOTED	
CITY OF HOUSTON PM	
BRENDA JOHNSON P.E.	
SHEET NO. OF	

DWG No.
O-2

FILE PATH: E:\Projects\2022\0400 Thru 0499\22-0426 Var City Of Houston\500 Drawings\DESIGN\60%\60% Odor Sheets\03 Woodland Ridge\22-0426 Var City Of Houston Woodland Ridge Odor Control Detail.dwg

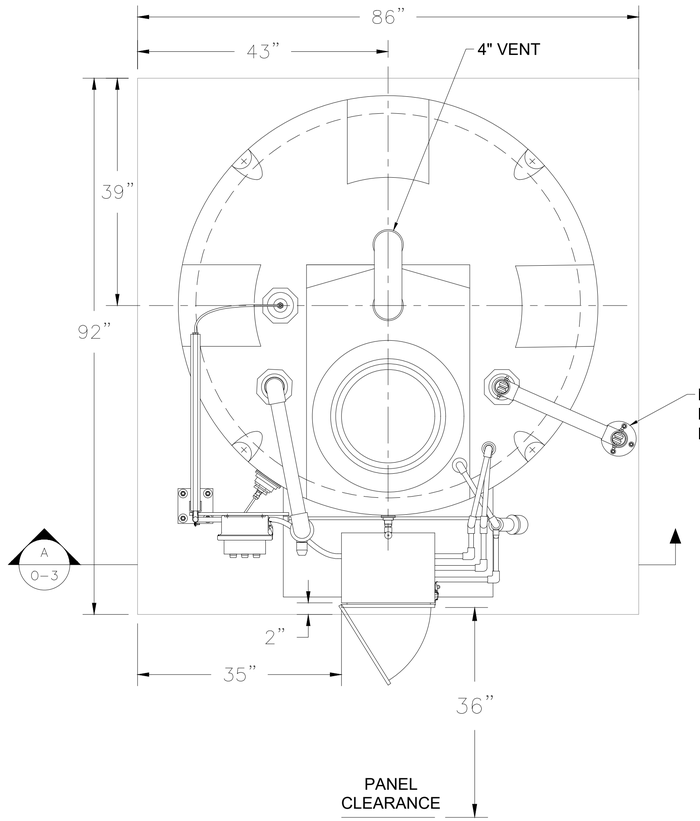

1 / 0-3 CHEMICAL FEED TANK – PLAN VIEW

SCALE

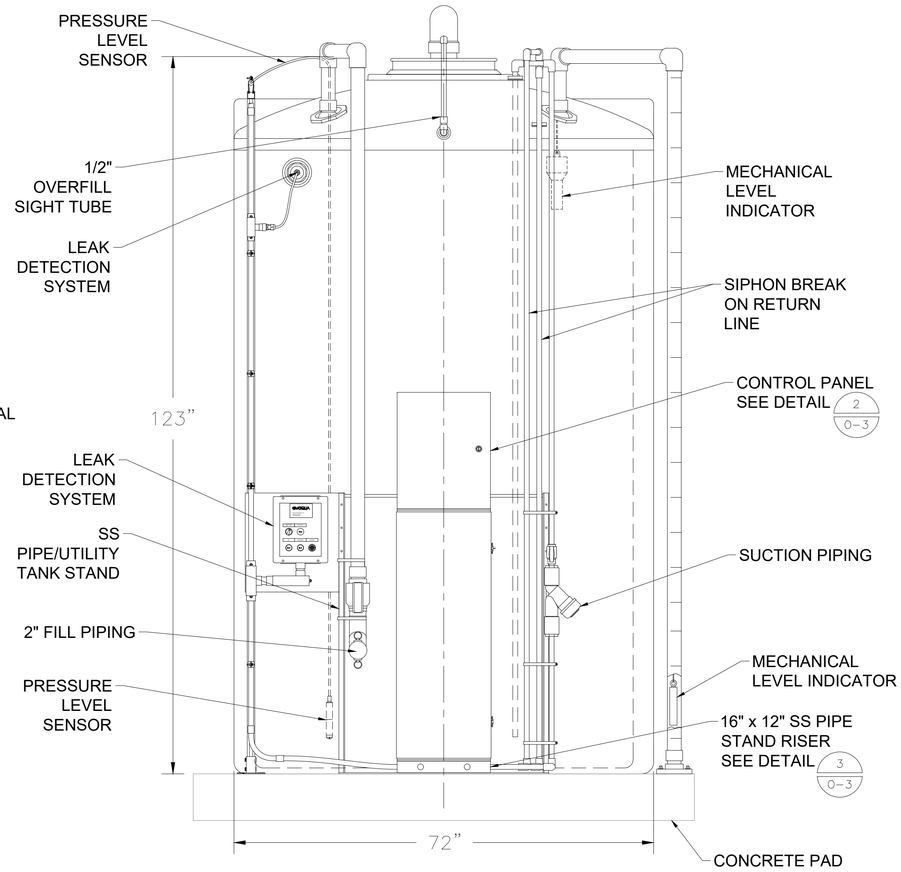

A / 0-3 CHEMICAL FEED TANK – SECTION VIEW

SCALE

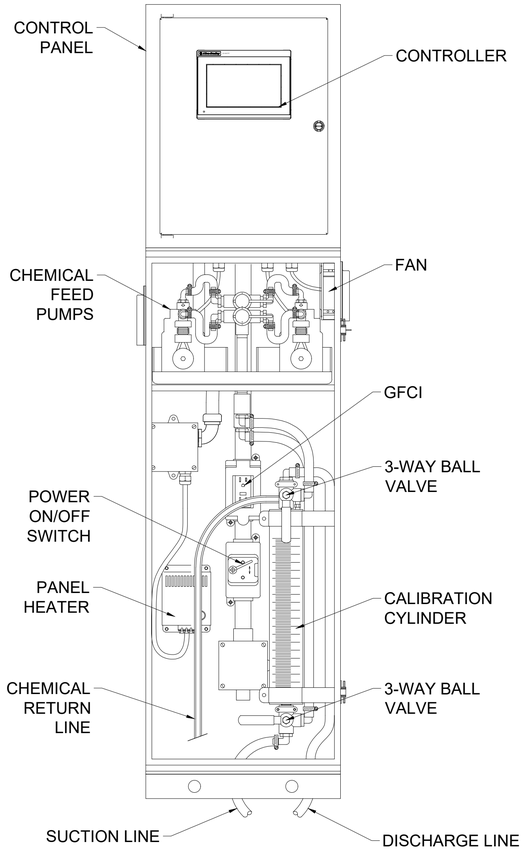

2 / 0-3 CHEMICAL FEED TANK CONTROL PANEL

NTS

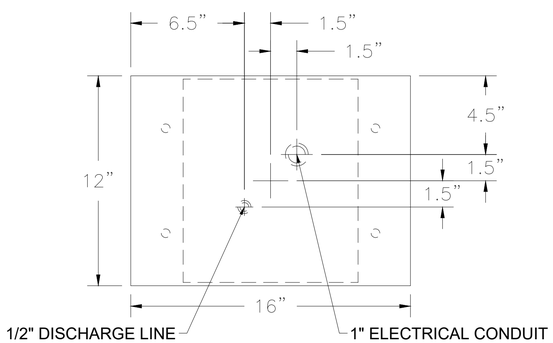

3 / 0-3 RISER/SLAB PENETRATION DETAIL

NTS

NO.	DATE	REVISION	APP.

PAPE-DAWSON

2107 CITYWEST BLVD, 3RD FLR I HOUSTON, TX 77042 I 713.428.2400

TEXAS ENGINEERING FIRM #470 I TEXAS SURVEYING FIRM #10028800

V&A Consulting Engineers, Inc.
15720 Park Row, Suite 500
Houston, TX 77084 Tel. (713) 568-9067
F-9154
V&A Project No.: 22-0426

SURVEYED BY:
PAPE-DAWSON ENGINEERS
FB NO. 24-018

INTERIM REVIEW ONLY
Document incomplete: not intended for regulatory approval, permit, or construction.
JAMES VAUGHAN HARSHMAN
Engineer
153247
Registration Number
09/02/2025
Date

V&A CONSULTING ENGINEERS, INC.
Texas Registered Engineering Firm
F-9154

CITY OF HOUSTON

HOUSTON PUBLIC WORKS

LIFT STATION REHABILITATION AND RECONSTRUCTION
BEN'S BRANCH, WOODLAND RIDGE, ELMWOOD HILLS, FOREST SHORES, TRAIL RIVER, RIVERLAWN

WOODLAND RIDGE LIFT STATION ODOR CONTROL SYSTEM CHEMICAL FEED

WBS NUMBER	FOR CITY OF HOUSTON USE ONLY
R-000267-0180-3	
DRAWING SCALE	
AS NOTED	
CITY OF HOUSTON PM	
BRENDA JOHNSON P.E.	
SHEET NO. OF	

0' 1' 2' 3'

1" = 1'-0" (FULL)

DWG No.
O-3

FILE PATH: E:\Projects\2022\0400 Thru 0499\22-0426 Var City Of Houston\500 Drawings\DESIGN\60%\60% Odor Sheets\03 Woodland Ridge\22-0426 Var City Of Houston Woodland Ridge Odor Control Detail.dwg

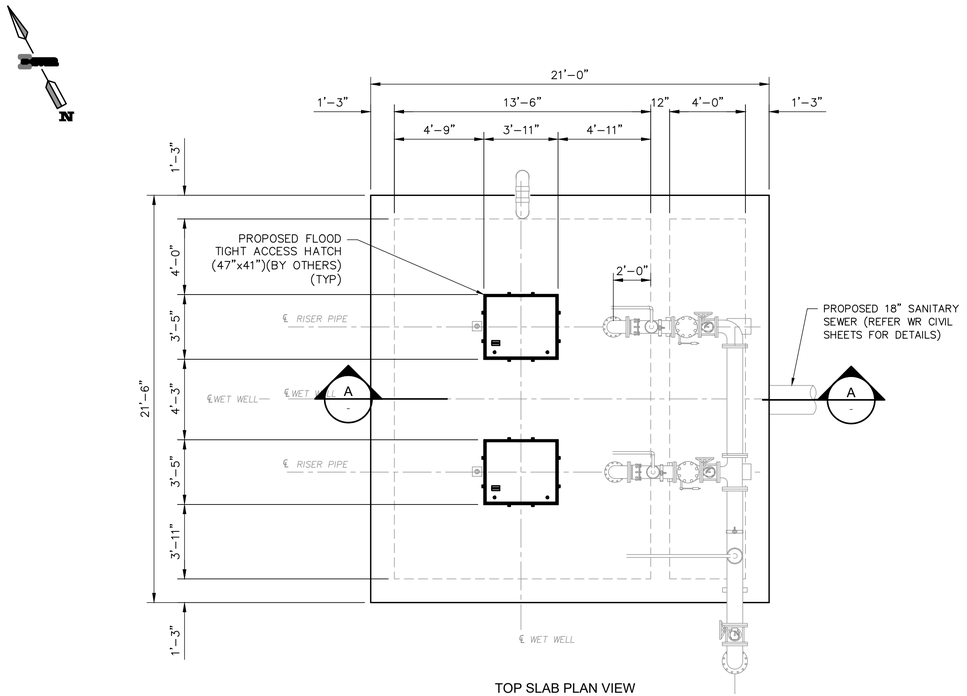

TOP SLAB PLAN VIEW

SCALE: 1/4" = 1'-0"

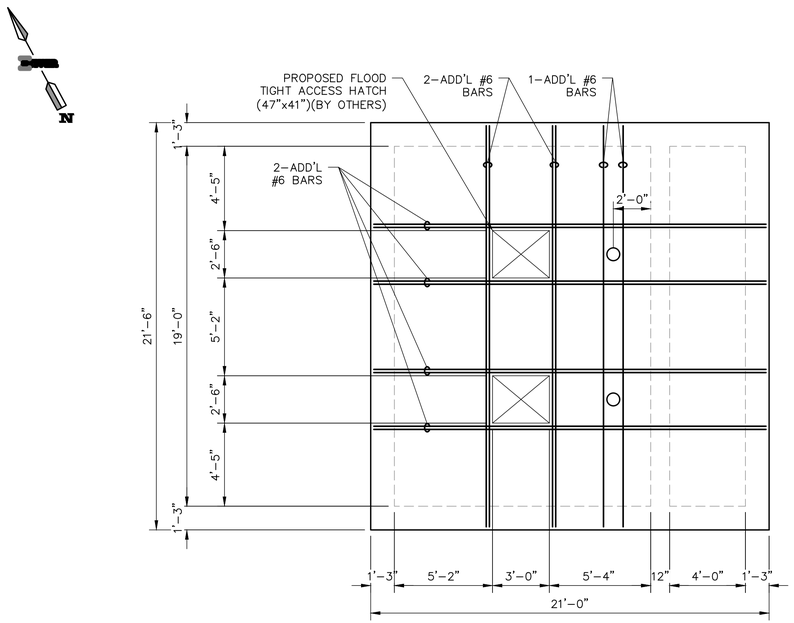

REINFORCING PLAN VIEW

SCALE: 1/4" = 1'-0"

NOTE:

1. FLOWABLE BACKFILL MUST BE PLACED IN 12" LIFTS AND MUST COMPLY WITH SPECIFICATION 02322. THE PLACEMENT INTERVALS MUST NOT BE EARLIER THAN 24 HOURS BETWEEN DIFFERENT LIFTS. THE FLOWABLE FILL MUST HAVE 100 PSI COMPRESSIVE STRENGTH AT 7 DAYS.
2. CONTRACTOR TO REFER MECHANICAL AND CIVIL DRAWINGS AND VERIFY ELEVATIONS, PIPE SIZES, PUMP AND PUMP HATCH DIMENSIONS.

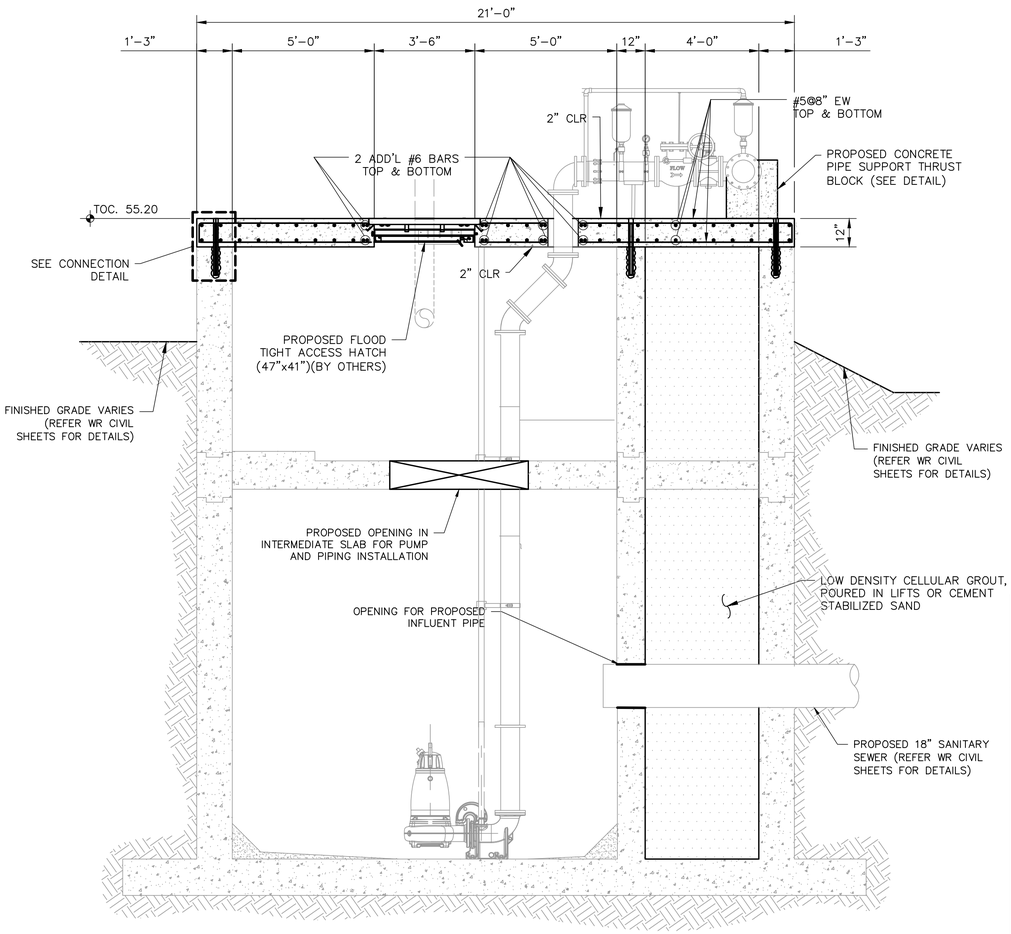

WR SECTION A

SCALE: 3/8" = 1'-0"

STIVER ENGINEERING
1305 Peden Street
Houston, Texas 77006
P (713) 526-3478
stivereng.com
TX Registration No. F-190

PAPE-DAWSON
2107 CITYWEST BLVD, 3RD FLR I HOUSTON, TX 77042 I 713 462 8200
TEXAS ENGINEERING FIRM #470 I TEXAS SURVEYING FIRM #1002880

FOR INTERIM
THIS DOCUMENT IS RELEASED FOR THE PURPOSE OF INTERIM REVIEW UNDER THE AUTHORITY OF JOHN M. STIVER 105179 10/16/25 THIS DOCUMENT IS NOT INTENDED FOR BIDDING, PERMITTING AND/OR CONSTRUCTION PURPOSES
REVIEW ONLY

SURVEYED BY:
PAPE-DAWSON ENGINEERS
FB NO. 24-018

CITY OF HOUSTON
HOUSTON PUBLIC WORKS

LIFT STATION REHABILITATION AND RECONSTRUCTION
BEN'S BRANCH, WOODLAND RIDGE, ELMWOOD HILLS, FOREST SHORES, TRAIL RIVER, RIVERLAWN
STRUCTURAL

WOODLAND RIDGE
PLAN VIEW, SECTION A AND REINFORCING PLAN VIEW

WBS NUMBER	FOR CITY OF HOUSTON USE ONLY
R-000267-0180-3	
DRAWING SCALE	
AS SHOWN	
CITY OF HOUSTON PM	
BRENDA JOHNSON P.E.	
SHEET NO. 66 OF	

WR-S-01

FILE PATH: F:\SE\PROJECTS\2023 Projects\23154.2-Pape-Dawson-Amir Shokouhi-COH LS Rehab For 6 Lift Stations Pkg 2-Phase II Design\CADD FILES\23154.2 CADD\Woodland Ridge LS\23154.2_LIFT STATION_WOODLAND RIDGE.dwg

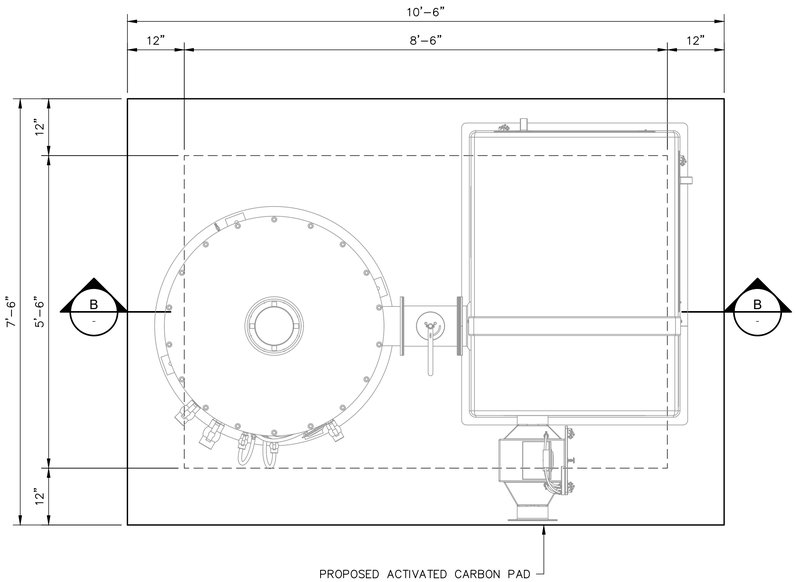

PLAN VIEW

SCALE: 3/4" = 1'-0"

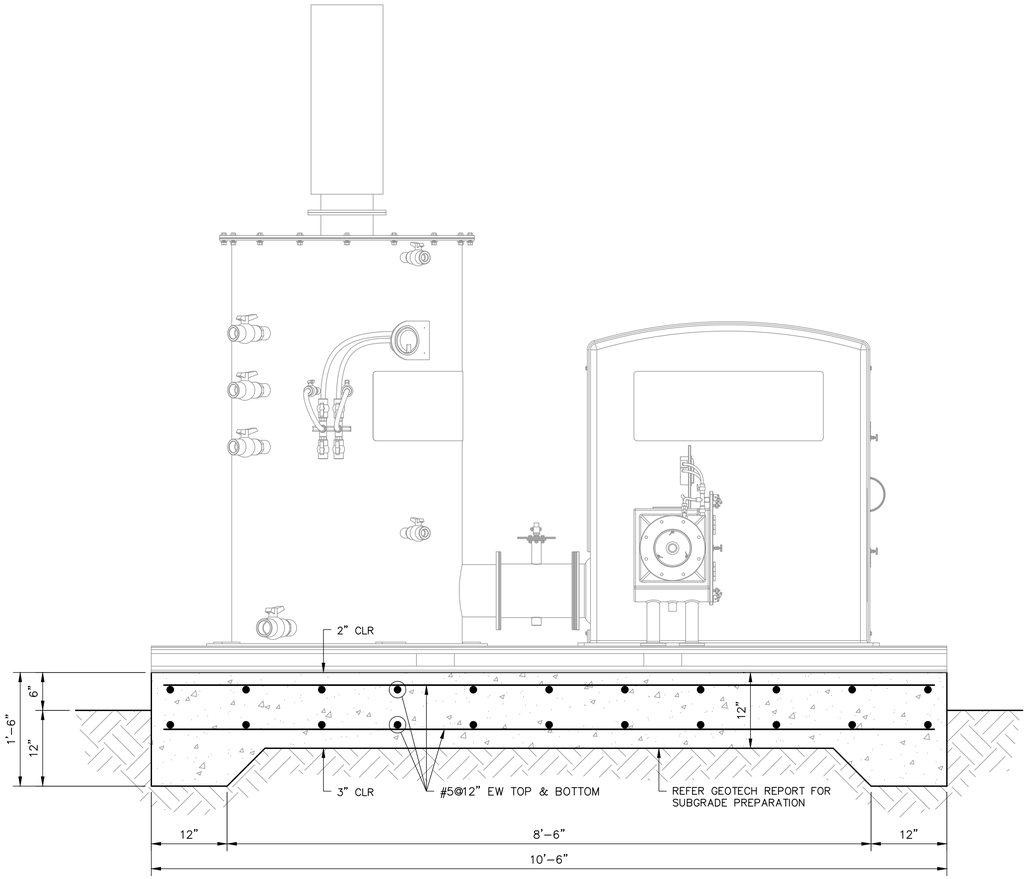

WR SECTION B

SCALE: 1" = 1'-0"

*PAD THICKNESS SUBJECT TO CHANGE, PENDING ANCHORAGE VERIFICATION.

STIVER ENGINEERING

1305 Peden Street
Houston, Texas 77006
P (713) 526-3478
stivereng.com
TX Registration No. F-190

PAPE-DAWSON

2107 CITYWEST BLVD, 3RD FLR I HOUSTON, TX 77042 I 713 428 3000
TEXAS ENGINEERING FIRM #470 I TEXAS SURVEYING FIRM #10028800

FOR INTERIM
THIS DOCUMENT IS RELEASED FOR THE PURPOSE OF INTERIM REVIEW UNDER THE AUTHORITY OF JOHN M. STIVER 105179 10/16/25 THIS DOCUMENT IS NOT INTENDED FOR BIDDING, PERMITTING AND/OR CONSTRUCTION PURPOSES
REVIEW ONLY

SURVEYED BY:
PAPE-DAWSON ENGINEERS
FB NO. 24-018

CITY OF HOUSTON

HOUSTON PUBLIC WORKS

LIFT STATION REHABILITATION AND RECONSTRUCTION
BEN'S BRANCH, WOODLAND RIDGE, ELMWOOD HILLS, FOREST SHORES, TRAIL RIVER, RIVERLAWN
STRUCTURAL

WOODLAND RIDGE ODOR CONTROL PAD PLAN VIEW AND SECTION B

WBS NUMBER	FOR CITY OF HOUSTON USE ONLY
R-000267-0180-3	
DRAWING SCALE	
AS SHOWN	
CITY OF HOUSTON PM	
BRENDA JOHNSON P.E.	
SHEET NO. 67 OF	

WR-S-02

FILE PATH: F:\SE\PROJECTS\2023 Projects\23154.2-Pape-Dawson-Amir Shokouhi-COH LS Rehab For 6 Lift Stations Pkg 2-Phase II Design\CADD FILES\23154.2 CADD\Woodland Ridge LS\23154.2_LIFT STATION_WOODLAND RIDGE.dwg

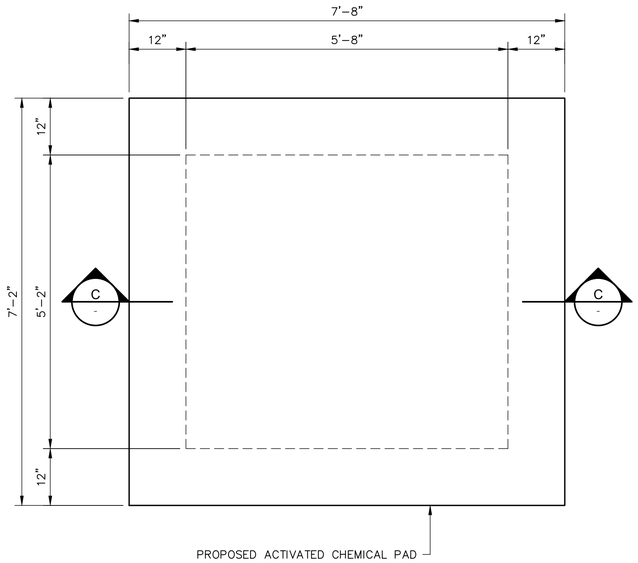

PLAN VIEW
SCALE: 3/4" = 1'-0"

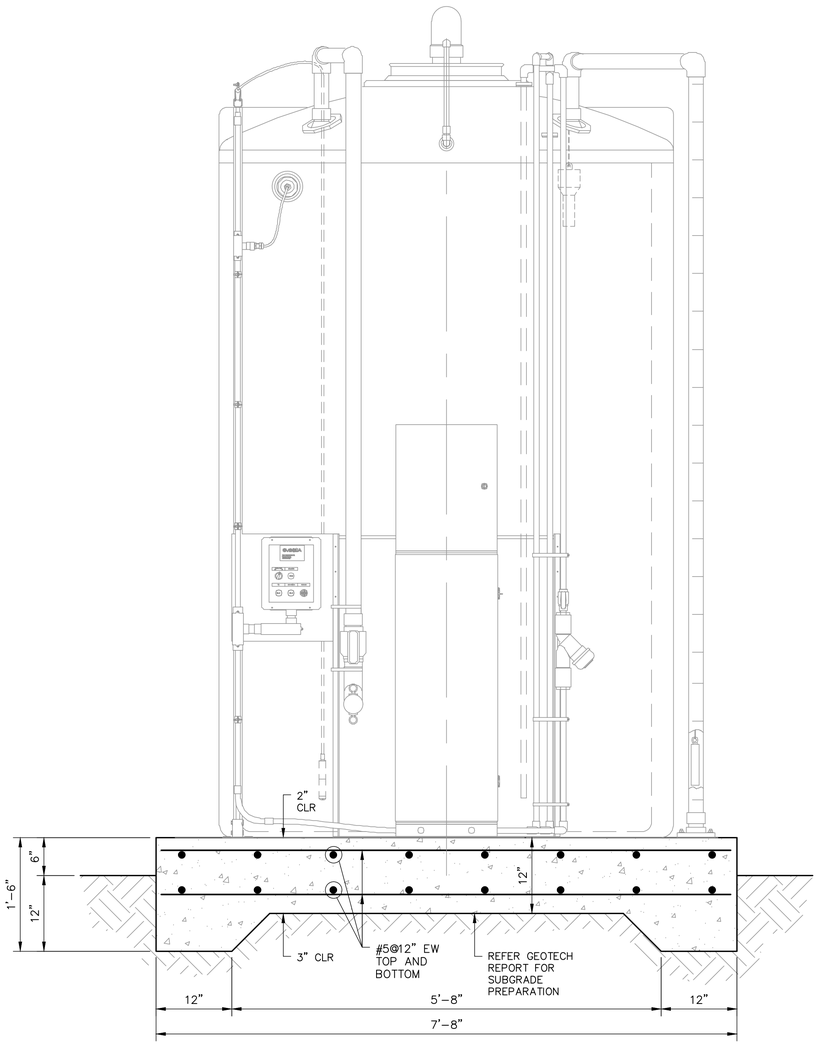

WR SECTION C
SCALE: 1" = 1'-0"

*PAD THICKNESS SUBJECT TO CHANGE, PENDING ANCHORAGE VERIFICATION.

STIVER ENGINEERING
1305 Peden Street
Houston, Texas 77006
P (713) 526-3478
stivereng.com
TX Registration No. F-190

PAPE-DAWSON
2107 CITYWEST BLVD, 3RD FLR I HOUSTON, TX 77042 I 713.462.2400
TEXAS ENGINEERING FIRM #470 I TEXAS SURVEYING FIRM #10028800

FOR INTERIM
THIS DOCUMENT IS RELEASED FOR THE PURPOSE OF INTERIM REVIEW UNDER THE AUTHORITY OF JOHN M. STIVER 105179 10/16/25 THIS DOCUMENT IS NOT INTENDED FOR BIDDING, PERMITTING AND/OR CONSTRUCTION PURPOSES
REVIEW ONLY

SURVEYED BY:
PAPE-DAWSON ENGINEERS
FB NO. 24-018

CITY OF HOUSTON
HOUSTON PUBLIC WORKS

LIFT STATION REHABILITATION AND RECONSTRUCTION
BEN'S BRANCH, WOODLAND RIDGE, ELMWOOD HILLS, FOREST SHORES, TRAIL RIVER, RIVERLAWN
STRUCTURAL

WOODLAND RIDGE CHEMICAL INJECTION PAD PLAN VIEW AND SECTION C

WBS NUMBER	FOR CITY OF HOUSTON USE ONLY
R-000267-0180-3	
DRAWING SCALE	
AS SHOWN	
CITY OF HOUSTON PM	
BRENDA JOHNSON P.E.	
SHEET NO. 68 OF	

WR-S-03

FILE PATH: F:\SE\PROJECTS\2023 Projects\23154.2-Pape-Dawson-Amir Shokouhi-COH LS Rehab For 6 Lift Stations Pkg 2-Phase II Design\CADD FILES\23154.2 CADD\Woodland Ridge LS\23154.2_LIFT STATION_WOODLAND RIDGE.dwg

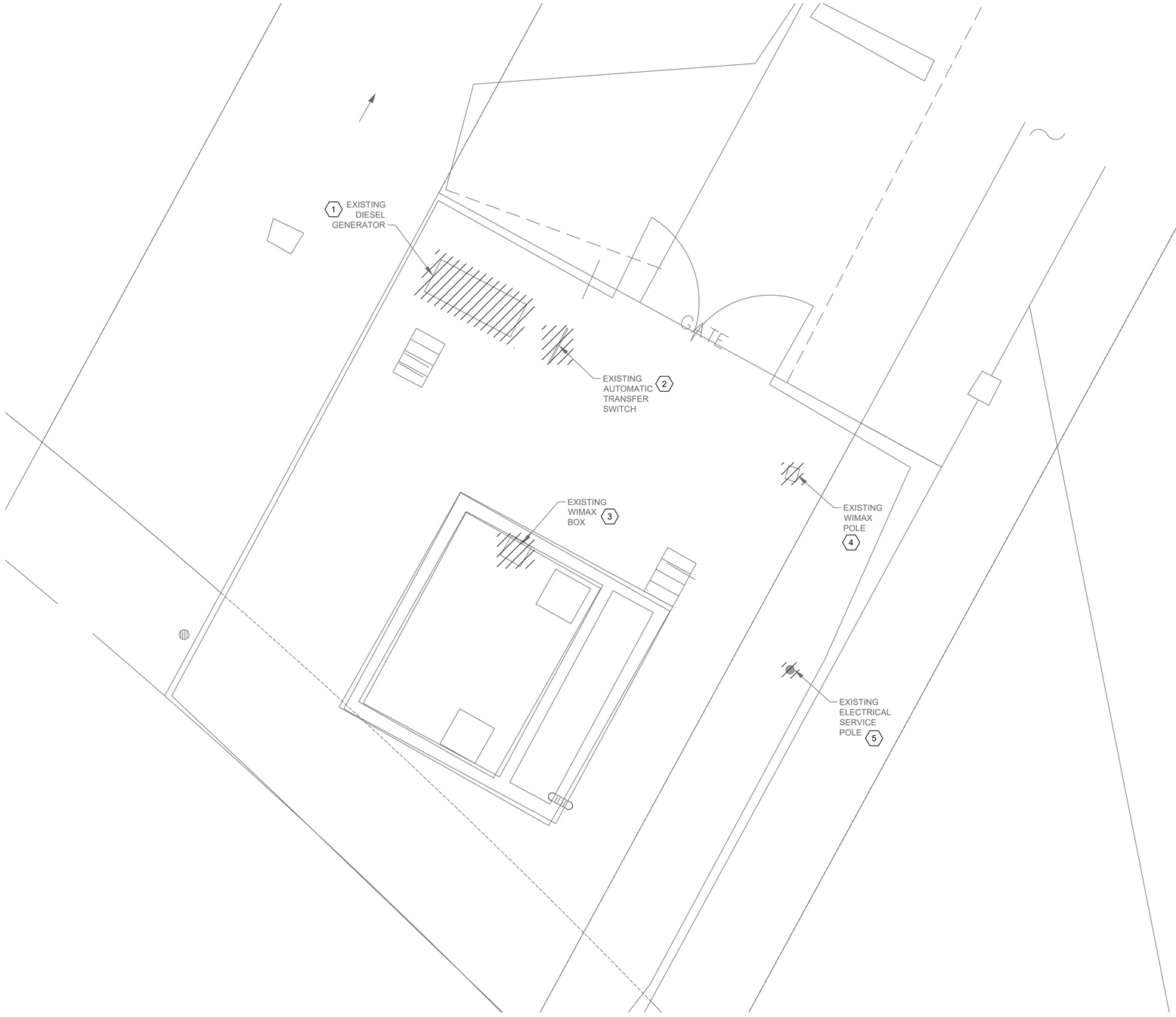

WOODLAND RIDGE ELECTRICAL DEMOLITION SITE

PLAN

1"= 5'-0"

NOTES BY SYMBOL "⟨#⟩":

1. EXISTING DIESEL GENERATOR, AND ASSOCIATED CONDUITS TO BE DEMOLISHED AND REMOVED.
2. EXISTING ATS, AND ASSOCIATED CONDUITS TO BE DEMOLISHED AND REMOVED.
3. EXISTING WIMAX BOX, AND ASSOCIATED CONDUITS TO BE DEMOLISHED AND REMOVED.
4. EXISTING WIMAX POLE, AND ASSOCIATED CONDUITS TO BE DEMOLISHED AND REMOVED.
5. EXISTING ELECTRICAL SERVICE POLE, AND ASSOCIATED CONDUITS TO BE DEMOLISHED AND REMOVED.

NO.	DATE	REVISION	APP.

SCALE: 1"= 5'

0' 5' 10' 15'

NOTICE:
FOR YOUR SAFETY, YOU ARE REQUIRED BY TEXAS LAW TO CALL 811 AT LEAST 48 HOURS BEFORE YOU DIG SO THAT UNDERGROUND LINES CAN BE MARKED. THIS SIGNATURE DOES NOT FULFILL YOUR OBLIGATION TO CALL 811

VERIFICATION OF PRIVATE UTILITY LINES

Date

CenterPoint Energy natural gas utilities shown. (Gas service lines are not shown). This signature not be used for conflict verification.

Signature valid for six months.

Date

CenterPoint Energy/UNDERGROUND Electrical Facilities Verification ONLY. (This signature verifies existing underground facilities – not to be used for conflict verification)

Signature valid for six months.

Date

Approved for AT&T underground conduit facilities only.
Signature valid for one year.

PAPE–DAWSON
2107 CITYWEST BLVD, 3RD FLR I HOUSTON, TX 77042 I 713.428.2400
TEXAS ENGINEERING FIRM #470 I TEXAS SURVEYING FIRM #10028800

GAI
Gupta & Associates, Inc.
CONSULTING ENGINEERING
Registration No. F-2593
302 Dennis St.
Houston, Texas 77006
Tel: 713-636-2936
Fax: 713-636-2987
email: hforouzan@gaiconsulting.com

SURVEYED BY:
PAPE–DAWSON ENGINEERS
FB NO. 24–018

THIS DOCUMENT IS RELEASED FOR INTERIM REVIEW UNDER THE AUTHORIZATION OF HOSS FOROUZAN, P.E. (#77748) AND IS **NOT TO BE USED FOR CONSTRUCTION.**

CITY OF HOUSTON
HOUSTON PUBLIC WORKS

LIFT STATION REHABILITATION AND RECONSTRUCTION
BEN'S BRANCH, WOODLAND RIDGE, ELMWOOD HILLS, FOREST SHORES, TRAIL RIVER, RIVERLAWN

ELECTRICAL

WOODLAND RIDGE LIFT STATION ELECTRICAL EXISTING SITE PLAN

WBS NUMBER	FOR CITY OF HOUSTON USE ONLY
R–000267–0180–3	
DRAWING SCALE	
AS NOTED	
CITY OF HOUSTON PM	
BRENDA JOHNSON P.E.	
SHEET NO. XX OF XX	

WR–E–01

FILE PATH: O:\H8107_Lift Station Rehabilitation And Reconstruction (Pape Dawson)\6 Drawings\Electrical\Working\Woodland Ridge\H8107_WR–E–01.dwg

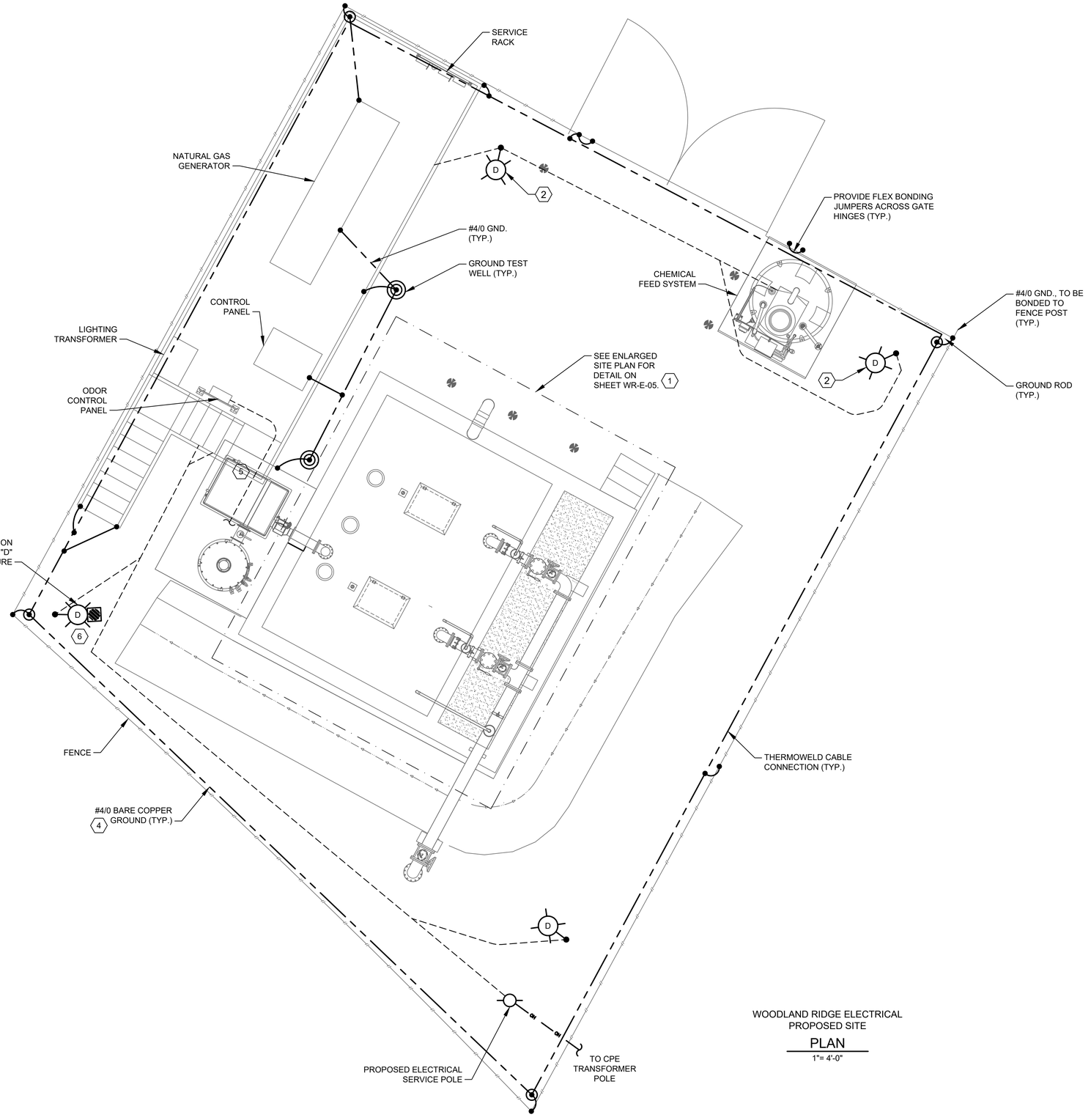

WOODLAND RIDGE ELECTRICAL
PROPOSED SITE
PLAN
1"= 4'-0"

NOTES BY SYMBOL "⬡#":

1. THE ELECTRICAL INSTALLATION IN THE WET WELL SHALL BE EXPLOSION PROOF, IN ACCORDANCE WITH THE NATIONAL ELECTRICAL CODE FOR CLASS I, DIVISION 1 LOCATIONS.
2. YARD LIGHT CONTROLLED BY LIGHTING SWITCH.
3. INSIDE WETWELL RATED NEMA CLASS 1, DIV. 1. OUTSIDE ABOVE GROUND, AROUND WETWELL RATED CLASS 1, DIV. 2 ACCORDING TO NFPA 820.
4. GROUNDING LOOP SHALL BE BURIED 30" BELOW FINISHED GRADE.
5. CONTRACTOR TO MAKE FINAL CONNECTION TO ODOR CONTROL BLOWER
6. TYPE "B" FIXTURE TO BE INSTALLED ON THE POLE PROVIDING WIRES FOR THE "B" LIGHT.

NO.	DATE	REVISION	APP.

SCALE: 1"= 4'

0' 4' 8' 12'

NOTICE:
FOR YOUR SAFETY, YOU ARE REQUIRED BY TEXAS LAW TO CALL 811 AT LEAST 48 HOURS BEFORE YOU DIG SO THAT UNDERGROUND LINES CAN BE MARKED. THIS SIGNATURE DOES NOT FULFILL YOUR OBLIGATION TO CALL 811

VERIFICATION OF PRIVATE UTILITY LINES

Date

CenterPoint Energy natural gas utilities shown. (Gas service lines are not shown). This signature not be used for conflict verification.

Signature valid for six months.

Date

CenterPoint Energy/UNDERGROUND Electrical Facilities Verification ONLY. (This signature verifies existing underground facilities – not to be used for conflict verification)

Signature valid for six months.

Date

Approved for AT&T underground conduit facilities only.
Signature valid for one year.

PAPE–DAWSON
2107 CITYWEST BLVD, 3RD FLR I HOUSTON, TX 77042 I 713.428.2400
TEXAS ENGINEERING FIRM #470 I TEXAS SURVEYING FIRM #10028800

GAI
Gupta & Associates, Inc.
CONSULTING ENGINEERING
Registration No. F-2593
302 Dennis St.
Houston, Texas 77006
Tel: 713-636-2936
Fax: 713-636-2987
email: hforouzan@gaiconsulting.com

THIS DOCUMENT IS RELEASED FOR INTERIM REVIEW UNDER THE AUTHORIZATION OF HOSS FOROUZAN, P.E. (#77748) AND IS **NOT TO BE USED FOR CONSTRUCTION.**

SURVEYED BY:
PAPE–DAWSON ENGINEERS
FB NO. 24–018

CITY OF HOUSTON
HOUSTON PUBLIC WORKS

LIFT STATION REHABILITATION AND RECONSTRUCTION
BEN'S BRANCH, WOODLAND RIDGE, ELMWOOD HILLS, FOREST SHORES, TRAIL RIVER, RIVERLAWN

ELECTRICAL

WOODLAND RIDGE LIFT STATION ELECTRICAL PROPOSED SITE PLAN

WBS NUMBER	FOR CITY OF HOUSTON USE ONLY
R–000267–0180–3	
DRAWING SCALE	
AS NOTED	
CITY OF HOUSTON PM	
BRENDA JOHNSON P.E.	
SHEET NO. XX OF XX	

WR–E–02

FILE PATH: O:\H8107_Lift Station Rehabilitation And Reconstruction (Pape Dawson)\6 Drawings\Electrical\Working\Woodland Ridge\H8107_WR–E–02.dwg

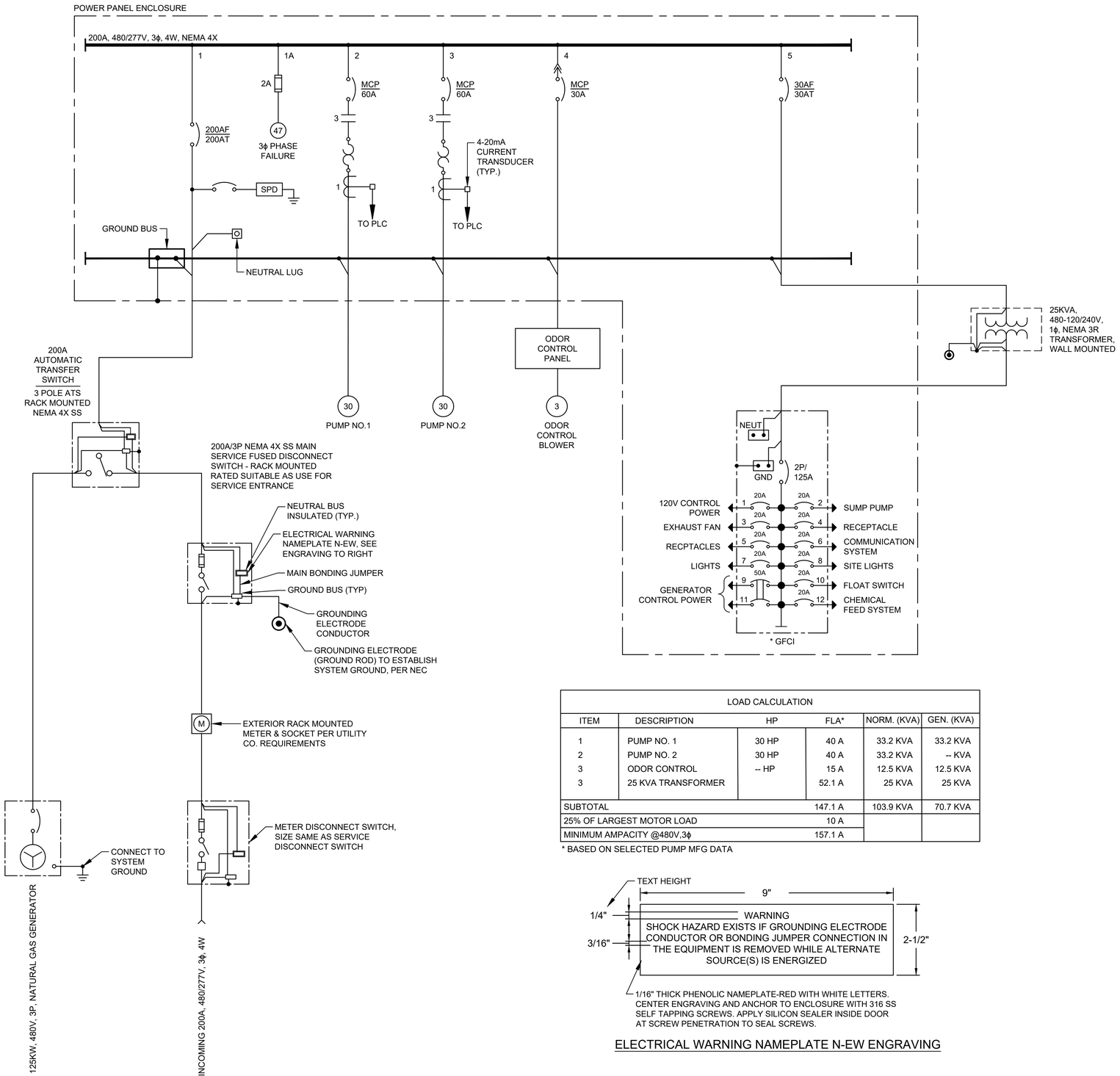

LOAD CALCULATION					
ITEM	DESCRIPTION	HP	FLA*	NORM. (KVA)	GEN. (KVA)
1	PUMP NO. 1	30 HP	40 A	33.2 KVA	33.2 KVA
2	PUMP NO. 2	30 HP	40 A	33.2 KVA	-- KVA
3	ODOR CONTROL	-- HP	15 A	12.5 KVA	12.5 KVA
3	25 KVA TRANSFORMER		52.1 A	25 KVA	25 KVA
SUBTOTAL			147.1 A	103.9 KVA	70.7 KVA
25% OF LARGEST MOTOR LOAD			10 A		
MINIMUM AMPACITY @480V,3ϕ			157.1 A		

* BASED ON SELECTED PUMP MFG DATA

1/16" THICK PHENOLIC NAMEPLATE-RED WITH WHITE LETTERS. CENTER ENGRAVING AND ANCHOR TO ENCLOSURE WITH 316 SS SELF TAPPING SCREWS. APPLY SILICON SEALER INSIDE DOOR AT SCREW PENETRATION TO SEAL SCREWS.

ELECTRICAL WARNING NAMEPLATE N-EW ENGRAVING

NO.	DATE	REVISION	APP.

NOTICE:
FOR YOUR SAFETY, YOU ARE REQUIRED BY TEXAS LAW TO CALL 811 AT LEAST 48 HOURS BEFORE YOU DIG SO THAT UNDERGROUND LINES CAN BE MARKED. THIS SIGNATURE DOES NOT FULFILL YOUR OBLIGATION TO CALL 811

VERIFICATION OF PRIVATE UTILITY LINES

Date

CenterPoint Energy natural gas utilities shown. (Gas service lines are not shown). This signature not be used for conflict verification.

Signature valid for six months.

Date

CenterPoint Energy/UNDERGROUND Electrical Facilities Verification ONLY. (This signature verifies existing underground facilities – not to be used for conflict verification)

Signature valid for six months.

Date

Approved for AT&T underground conduit facilities only.
Signature valid for one year.

PAPE–DAWSON
2107 CITYWEST BLVD, 3RD FLR I HOUSTON, TX 77042 I 713.428.2400
TEXAS ENGINEERING FIRM #470 I TEXAS SURVEYING FIRM #10028800

GAI
Gupta & Associates, Inc.
CONSULTING ENGINEERING
Registration No. F-2593
302 Dennis St.
Houston, Texas 77006
Tel: 713-636-2936
Fax: 713-636-2987
email: hforouzan@gaiconsulting.com

SURVEYED BY:
PAPE–DAWSON ENGINEERS
FB NO. 24–018

THIS DOCUMENT IS RELEASED FOR INTERIM REVIEW UNDER THE AUTHORIZATION OF HOSS FOROUZAN, P.E. (#77748) AND IS **NOT TO BE USED FOR CONSTRUCTION.**

CITY OF HOUSTON
HOUSTON PUBLIC WORKS

LIFT STATION REHABILITATION AND RECONSTRUCTION
BEN'S BRANCH, WOODLAND RIDGE, ELMWOOD HILLS, FOREST SHORES, TRAIL RIVER, RIVERLAWN

ELECTRICAL

WOODLAND RIDGE LIFT STATION ELECTRICAL ONE–LINE DIAGRAM

WBS NUMBER	FOR CITY OF HOUSTON USE ONLY
R–000267–0180–3	
DRAWING SCALE	
AS NOTED	
CITY OF HOUSTON PM	
BRENDA JOHNSON P.E.	
SHEET NO. XX OF XX	

WR–E–03

FILE PATH: O:\H8107_Lift Station Rehabilitation And Reconstruction (Pape Dawson)\6 Drawings\Electrical\Working\Woodland Ridge\H8107_WR–E–03.dwg

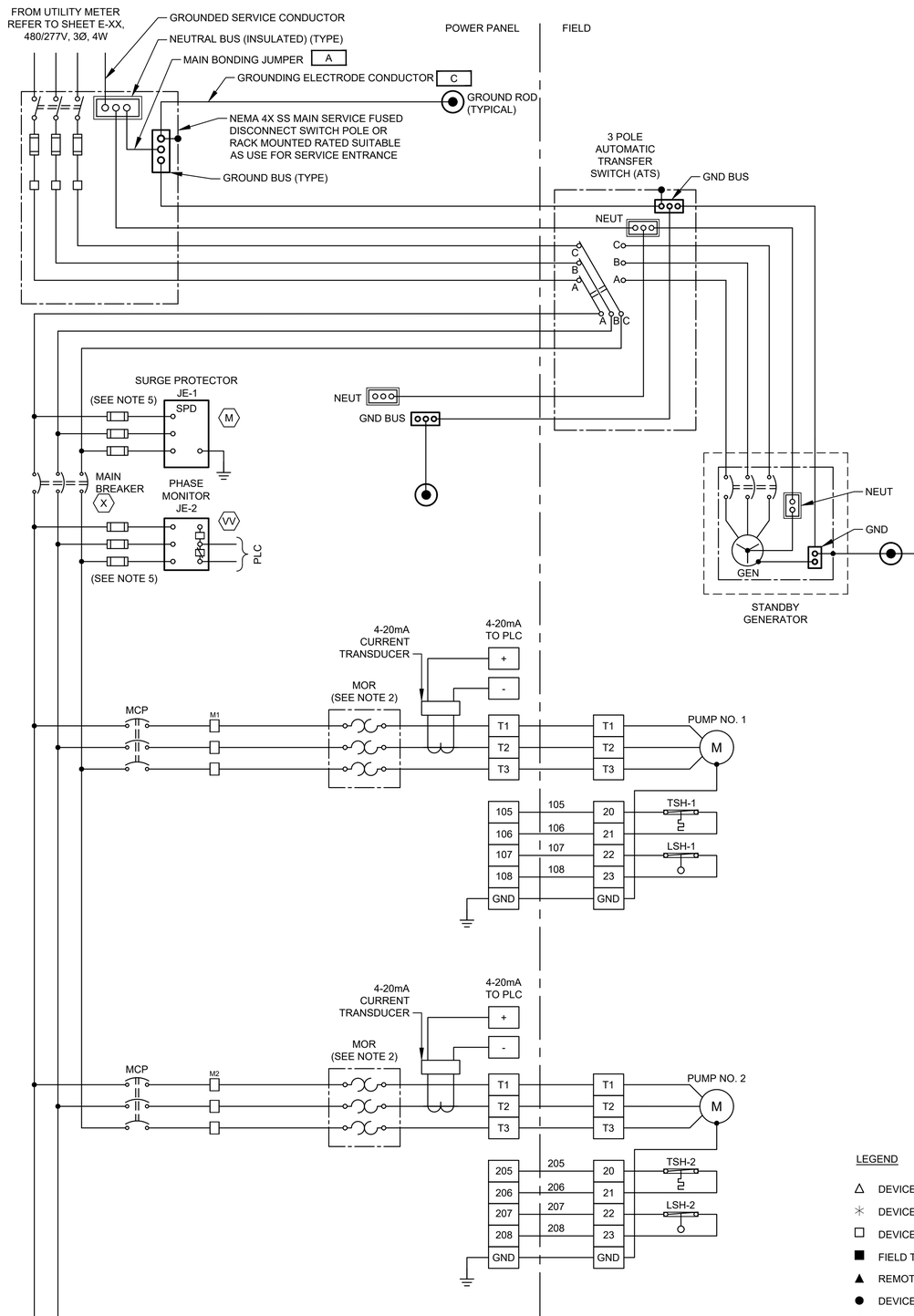

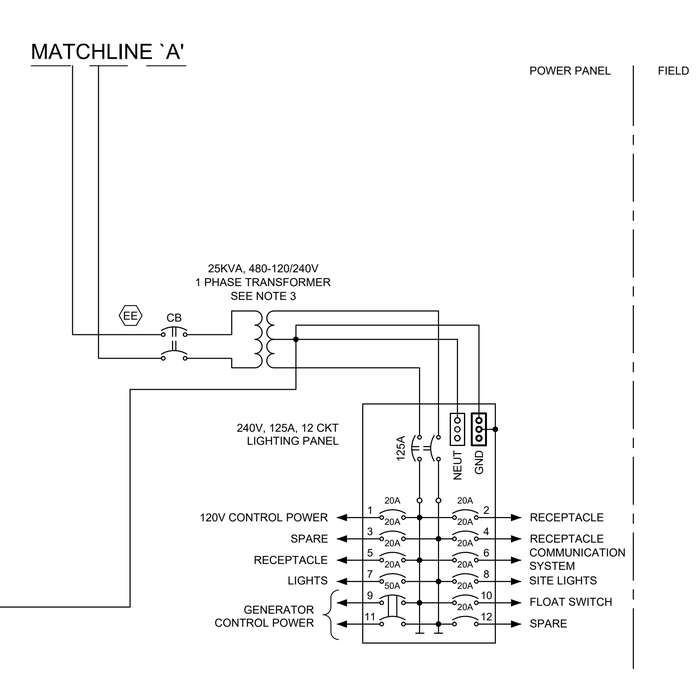

NOTES:

1. UNLESS OTHERWISE INDICATE, ALL DEVICES WITHOUT FURTHER DESIGNATION ARE LOCATED AT THE CONTROL PANEL.
2. THE COMBINATION OF CT AND MOTOR OVERLOAD RELAY IF REQUIRED.
3. CONTRACTOR TO REVISE DWG. BASED ON MANUFACTURE AND SIZE.
4. CONTRACTOR SHALL TERMINATE POWER & CONTROL WIRES PER MANUFACTURER'S REQUIREMENTS.
5. PROVIDE FUSE SIZE ACCORDING TO MANUFACTURER'S REQUIREMENTS.

LEGEND

- △ DEVICE OR FIELD TERMINAL LOCATED AT MOTOR
- ✳ DEVICE OR FIELD TERMINAL LOCATED REMOTE
- □ DEVICE OR FIELD TERMINAL LOCATED AT POWER PANEL
- ■ FIELD TERMINAL LOCATED AT CONTROL PANEL
- ▲ REMOTE TERMINAL
- ● DEVICE TERMINAL NO.
- ◆ PC INTERFACE TERMINAL

NO.	DATE	REVISION	APP.

NOTICE:
FOR YOUR SAFETY, YOU ARE REQUIRED BY TEXAS LAW TO CALL 811 AT LEAST 48 HOURS BEFORE YOU DIG SO THAT UNDERGROUND LINES CAN BE MARKED. THIS SIGNATURE DOES NOT FULFILL YOUR OBLIGATION TO CALL 811

VERIFICATION OF PRIVATE UTILITY LINES

Date

CenterPoint Energy natural gas utilities shown. (Gas service lines are not shown). This signature not be used for conflict verification.

Signature valid for six months.

Date

CenterPoint Energy/UNDERGROUND Electrical Facilities Verification ONLY. (This signature verifies existing underground facilities – not to be used for conflict verification)

Signature valid for six months.

Date

Approved for AT&T underground conduit facilities only.
Signature valid for one year.

PAPE–DAWSON
2107 CITYWEST BLVD, 3RD FLR I HOUSTON, TX 77042 I 713.428.2400
TEXAS ENGINEERING FIRM #470 I TEXAS SURVEYING FIRM #10028800

GAI
Gupta & Associates, Inc.
CONSULTING ENGINEERING
Registration No. F-2593
302 Dennis St.
Houston, Texas 77006
Tel: 713-636-2936
Fax: 713-636-2987
email: hforouzan@guiconsulting.com

SURVEYED BY:
PAPE–DAWSON ENGINEERS
FB NO. 24–018

THIS DOCUMENT IS RELEASED FOR INTERIM REVIEW UNDER THE AUTHORIZATION OF HOSS FOROUZAN, P.E. (#77748) AND IS **NOT TO BE USED FOR CONSTRUCTION.**

CITY OF HOUSTON
HOUSTON PUBLIC WORKS

LIFT STATION REHABILITATION AND RECONSTRUCTION
BEN'S BRANCH, WOODLAND RIDGE, ELMWOOD HILLS, FOREST SHORES, TRAIL RIVER, RIVERLAWN

ELECTRICAL

WOODLAND RIDGE LIFT STATION ELECTRICAL THREE LINE DIAGRAM

WBS NUMBER	FOR CITY OF HOUSTON USE ONLY
R–000267–0180–3	
DRAWING SCALE	
AS NOTED	
CITY OF HOUSTON PM	
BRENDA JOHNSON P.E.	
SHEET NO. XX OF XX	

WR–E–04

FILE PATH: O:\H8107_Lift Station Rehabilitation And Reconstruction (Pape Dawson)\6 Drawings\Electrical\Working\Woodland Ridge\H8107_WR–E–04.dwg

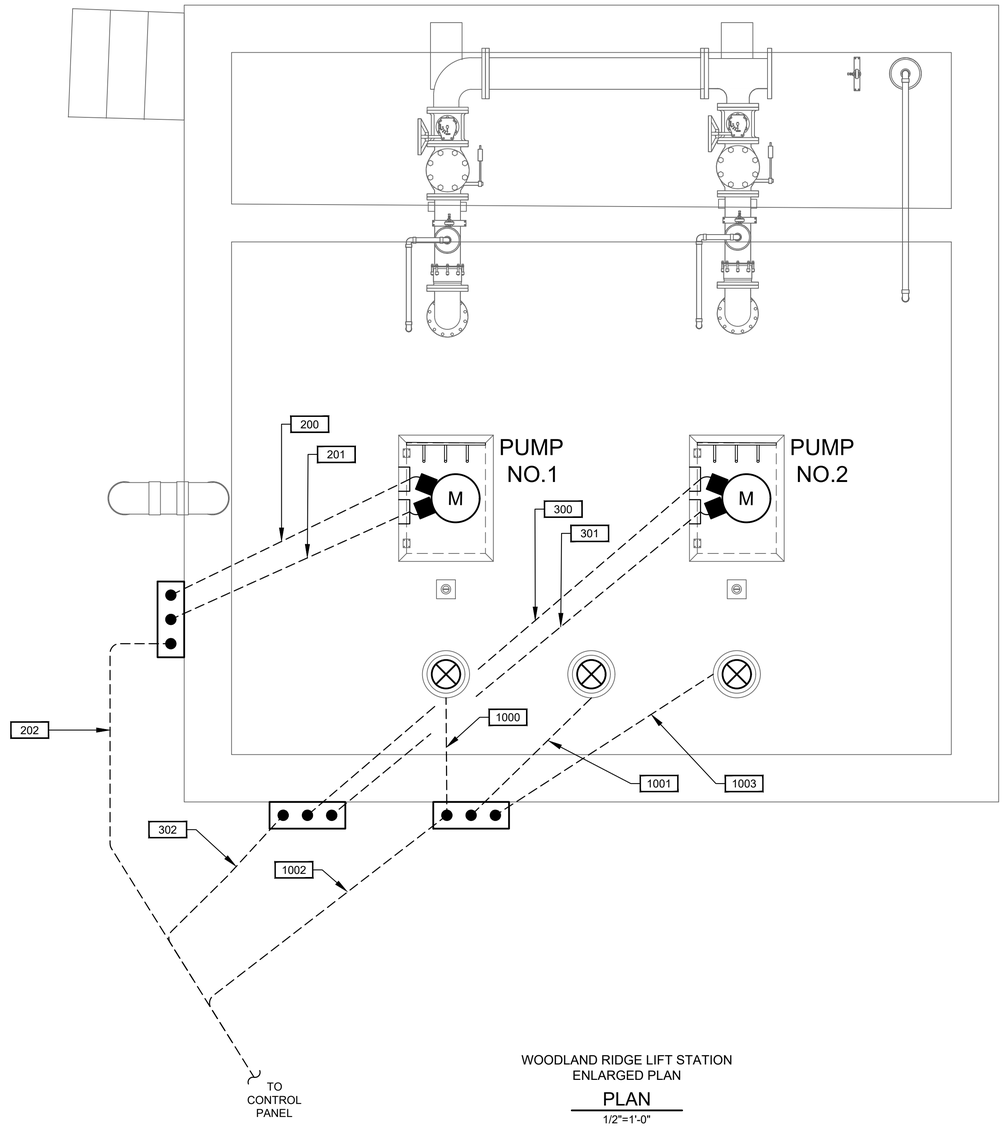

WOODLAND RIDGE LIFT STATION
ENLARGED PLAN

PLAN

1/2"=1'-0"

NO.	DATE	REVISION	APP.

1 0 1 2 3

SCALE: 1/2" = 1'-0"

NOTICE:
FOR YOUR SAFETY, YOU ARE REQUIRED BY TEXAS LAW TO CALL 811 AT LEAST 48 HOURS BEFORE YOU DIG SO THAT UNDERGROUND LINES CAN BE MARKED. THIS SIGNATURE DOES NOT FULFILL YOUR OBLIGATION TO CALL 811

VERIFICATION OF PRIVATE UTILITY LINES

Date

CenterPoint Energy natural gas utilities shown. (Gas service lines are not shown). This signature not be used for conflict verification.

Signature valid for six months.

Date

CenterPoint Energy/UNDERGROUND Electrical Facilities Verification ONLY. (This signature verifies existing underground facilities – not to be used for conflict verification)

Signature valid for six months.

Date

Approved for AT&T underground conduit facilities only.
Signature valid for one year.

PAPE–DAWSON
2107 CITYWEST BLVD, 3RD FLR I HOUSTON, TX 77042 I 713.428.2400
TEXAS ENGINEERING FIRM #470 I TEXAS SURVEYING FIRM #10028800

GAI
Gupta & Associates, Inc.
CONSULTING ENGINEERING
Registration No. F-2593
302 Dennis St.
Houston, Texas 77006
Tel: 713-636-2936
Fax: 713-636-2987
email: hforouzan@guiconsulting.com

THIS DOCUMENT IS RELEASED FOR INTERIM REVIEW UNDER THE AUTHORIZATION OF HOSS FOROUZAN, P.E. (#77748) AND IS **NOT TO BE USED FOR CONSTRUCTION.**

SURVEYED BY:
PAPE–DAWSON ENGINEERS
FB NO. 24–018

CITY OF HOUSTON
HOUSTON PUBLIC WORKS

LIFT STATION REHABILITATION AND RECONSTRUCTION
BEN'S BRANCH, WOODLAND RIDGE, ELMWOOD HILLS, FOREST SHORES, TRAIL RIVER, RIVERLAWN

ELECTRICAL

WOODLAND RIDGE LIFT STATION ELECTRICAL ENLARGED LIFT STATION PLAN

WBS NUMBER	FOR CITY OF HOUSTON USE ONLY
R–000267–0180–3	
DRAWING SCALE	
AS NOTED	
CITY OF HOUSTON PM	
BRENDA JOHNSON P.E.	
SHEET NO. XX OF XX	

WR–E–05

FILE PATH: O:\H8107_Lift Station Rehabilitation And Reconstruction (Pape Dawson)\6 Drawings\Electrical\Working\Woodland Ridge\H8107_WR–E–05.dwg

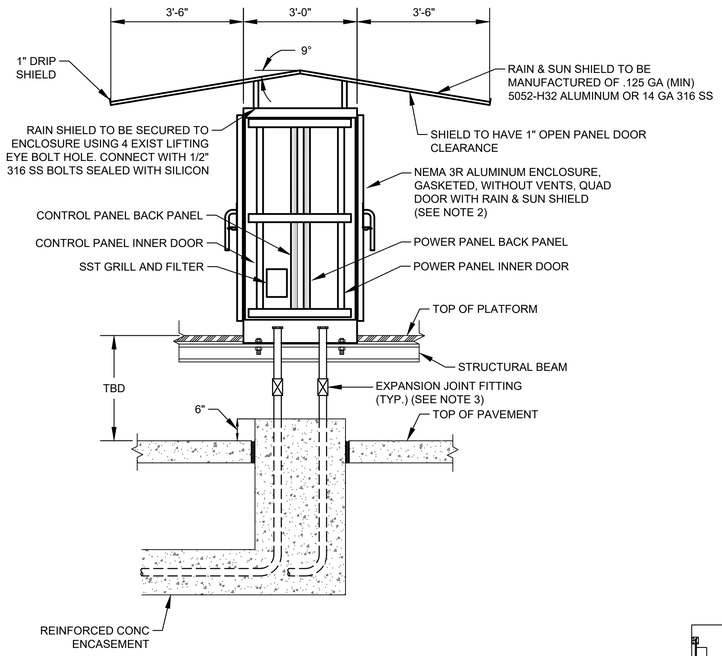

CONTROL CABINET ENCLOSURE WITH PLATFORM

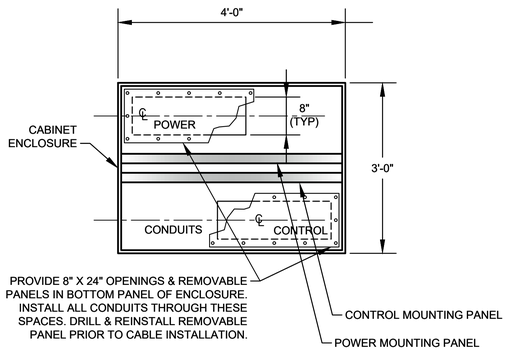

SECTION 2 / NTS

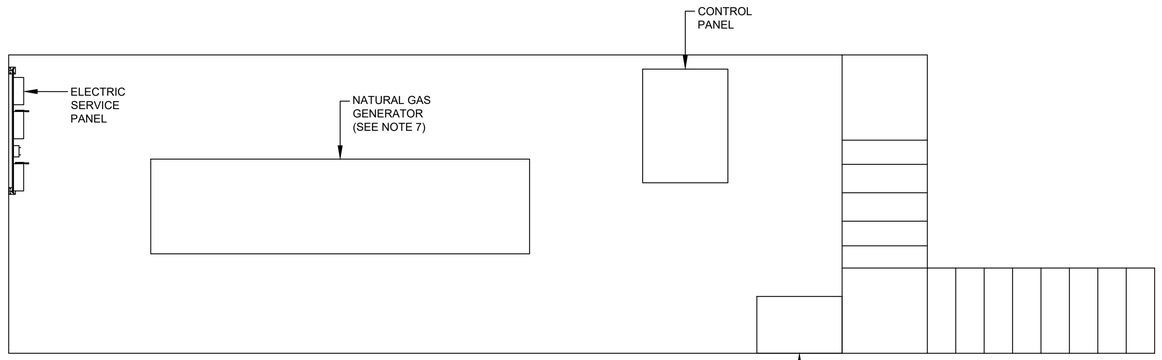

GENERATOR ON ELEVATED PLATFORM DETAIL

DETAIL 3 / 3/8" = 1'-0"

NOTES:

1. SEE SHEET WR-I-04 FOR EQUIPMENT SCHEDULE.
2. REFER TO SPEC 13325-8 FOR PANEL DIMENSIONS.
3. EXPANSION JOINT FITTINGS AS REQUIRED.
4. REFER TO SERVICE RACK FOR DETAIL.
5. REFER TO STRUCTURAL DRAWINGS .
6. CONDUIT TO BE MOUNTED BELOW PLATFORM GRATING.
7. GENERATOR IS FOR EMERGENCY USE ONLY.

NO.	DATE	REVISION	APP.

NOTICE:
FOR YOUR SAFETY, YOU ARE REQUIRED BY TEXAS LAW TO CALL 811 AT LEAST 48 HOURS BEFORE YOU DIG SO THAT UNDERGROUND LINES CAN BE MARKED. THIS SIGNATURE DOES NOT FULFILL YOUR OBLIGATION TO CALL 811

VERIFICATION OF PRIVATE UTILITY LINES

Date

CenterPoint Energy natural gas utilities shown. (Gas service lines are not shown). This signature not be used for conflict verification.

Signature valid for six months.

Date

CenterPoint Energy/UNDERGROUND Electrical Facilities Verification ONLY. (This signature verifies existing underground facilities – not to be used for conflict verification)

Signature valid for six months.

Date

Approved for AT&T underground conduit facilities only.
Signature valid for one year.

PAPE–DAWSON
2107 CITYWEST BLVD, 3RD FLR I HOUSTON, TX 77042 I 713.428.2400
TEXAS ENGINEERING FIRM #470 I TEXAS SURVEYING FIRM #10028800

GAI
Gupta & Associates, Inc.
CONSULTING ENGINEERING
Registration No. F-2593
302 Dennis St.
Houston, Texas 77006
Tel: 713-636-2936
Fax: 713-636-2987
email: hforouzan@guiconsulting.com

THIS DOCUMENT IS RELEASED FOR INTERIM REVIEW UNDER THE AUTHORIZATION OF HOSS FOROUZAN, P.E. (#77748) AND IS **NOT TO BE USED FOR CONSTRUCTION.**

SURVEYED BY:
PAPE–DAWSON ENGINEERS
FB NO. 24–018

CITY OF HOUSTON
HOUSTON PUBLIC WORKS

LIFT STATION REHABILITATION AND RECONSTRUCTION
BEN'S BRANCH, WOODLAND RIDGE, ELMWOOD HILLS, FOREST SHORES, TRAIL RIVER, RIVERLAWN

ELECTRICAL

WOODLAND RIDGE LIFT STATION CONTROL CABINET ENCLOSURE DETAIL

WBS NUMBER	FOR CITY OF HOUSTON USE ONLY
R–000267–0180–3	
DRAWING SCALE	
AS NOTED	
CITY OF HOUSTON PM	
BRENDA JOHNSON P.E.	
SHEET NO. XX OF XX	

WR–E–06

FILE PATH: O:\H8107_Lift Station Rehabilitation And Reconstruction (Pape Dawson)\6 Drawings\Electrical\Working\Woodland Ridge\H8107_WR–E–06.dwg

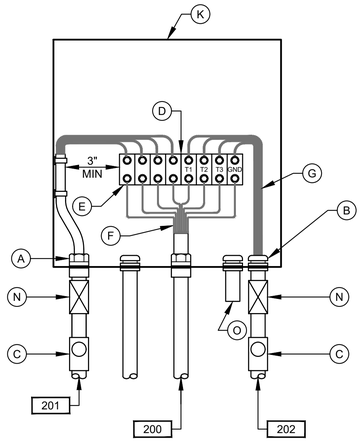

PUMP NO.1
JUNCTION BOX

DETAIL 3
NTS
(SEE NOTE 7)

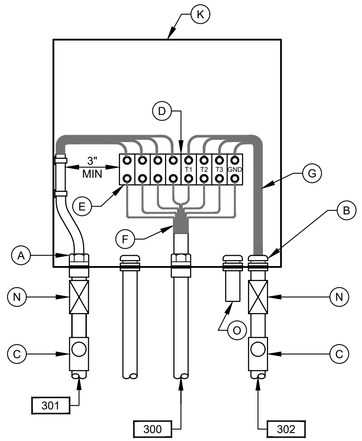

PUMP NO.2
JUNCTION BOX

DETAIL 4
NTS
(SEE NOTE 7)

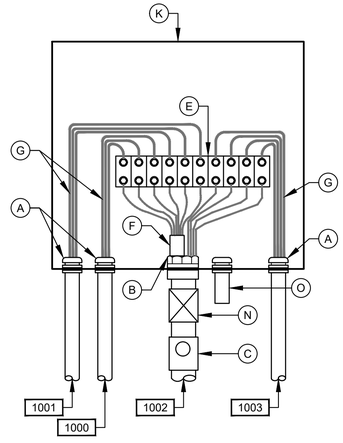

LEVEL TRANSMITTER
JUNCTION BOX

DETAIL 5
NTS
(SEE NOTE 7)

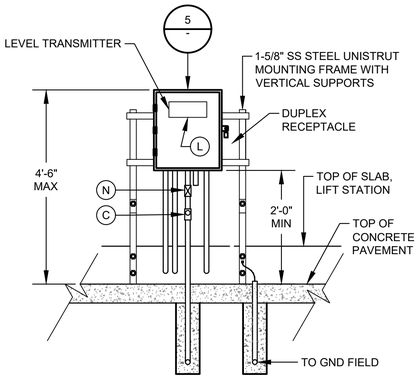

DETAIL 6
NTS
(SEE NOTE 9 & 12)

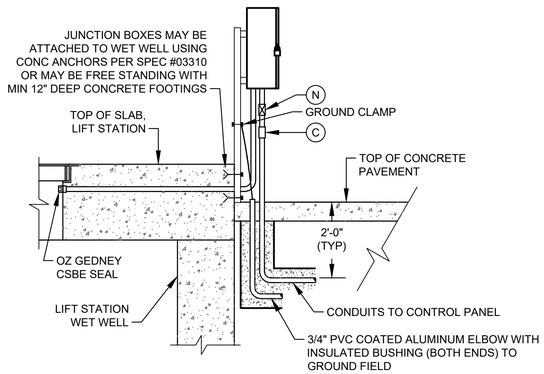

TYP SIDE VIEW FOR DETAIL 1, 2, & 6

(SEE NOTE 10)

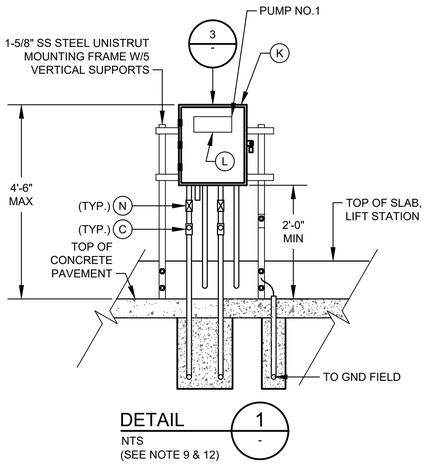

DETAIL 1
NTS
(SEE NOTE 9 & 12)

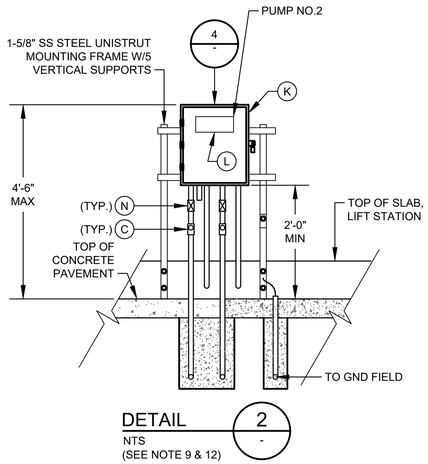

DETAIL 2
NTS
(SEE NOTE 9 & 12)

JUNCTION BOX EQUIPMENT SCHEDULE

- A - OZ GEDNEY CSBE SEAL
- B - WATERTIGHT CONDUIT HUB WITH INSULATED BUSHING
- C - CLASS I, DIV 1, EXPLOSION PROOF SEAL INSTALLED PER NEC DIV 501
- D - POWER TERMINAL BLOCK W/SCREW DOWN BOX LUGS
- E - CONTROL TERM BLOCK W/SCREW DOWN BOX LUGS
- F - MULTI-CONDUCTOR CABLE, REMOVE OUTER JACKET AS SHOWN
- G - WIRING AS SCHEDULED
- H - NOT USED.
- I - NOT USED.
- J - NOT USED
- K - NEMA 6P STAINLESS STEEL JUNCTION BOX WITH GASKETED FRONT COVER, SINGLE QUARTER TURN, OIL-TIGHT LATCH AND PADLOCKING PROVISIONS, MINIMUM SIZE: 12"W X 16"H X 6"D
- L - NAMEPLATE, SEE SPECIFICATIONES (SEE NAMEPLATE SCHEDULE)
- M - NOT USED.
- N - EXPANSION FITTING
- O - DRAIN VENT

NOTES:

1. NAMEPLATES SHALL BE MOUNTED TO JUNCTION BOXES USING 316 STAINLESS STEEL HARDWARE.
2. MAINTAIN MINIMUM SEPARATION REQUIRED UNDER NEC ARTICLE 504, BETWEEN INTRINSICALLY SAFE CONTROL WIRING AND NON INTRINSICALLY SAFE MOTOR FEEDER WIRING.
3. UNLESS OTHERWISE NOTED, ALL EXTERIOR EXPOSED CONDUITS SHALL BE PVC COATED ALUMINUM.
4. UNLESS OTHERWISE NOTED, ALL NUTS, BOLTS, SCREWS WASHERS, ETC SHALL BE TYPE 316 STAINLESS STEEL.
5. ALL UNDERGROUND CONDUITS TO BE ENCASED IN REINFORCED CONCRETE DUCTBANK.
6. PROVIDE ANTI-CORROSIVE SPRAY ON ANY BARE METAL PARTS OR EXPOSED WIRE.
7. SEE WIRING SCHEMATICS FOR TERMINALS AND WIRE NUMBERS.
8. ANY CONDUIT REQUIRING A CSBE SEAL, SHALL BE A MINIMUM SIZE OF 2 1/2" PER CABLE.
9. DETAIL SHOWN MAY BE MODIFIED PER SITE SITUATION.
10. COORDINATE WITH WASTE WATER OPERATIONS ELECTRICAL ORGANIZATION FOR THE OPENING OF JUNCTION BOXES TO THE SIDE OF WET WELL IF REQUIRED DURING CONSTRUCTION.
11. THE ENCLOSURES WITH ELECTRICAL CIRCUITS SHALL BE A MINIMUM OF 5 FEET FROM ANY CLASSIFIED AREA, OTHERWISE EXPLOSION PROOF TYPE ENCLOSURES SHALL BE USED.

NO.	DATE	REVISION	APP.

NOTICE:
FOR YOUR SAFETY, YOU ARE REQUIRED BY TEXAS LAW TO CALL 811 AT LEAST 48 HOURS BEFORE YOU DIG SO THAT UNDERGROUND LINES CAN BE MARKED. THIS SIGNATURE DOES NOT FULFILL YOUR OBLIGATION TO CALL 811

VERIFICATION OF PRIVATE UTILITY LINES

Date

CenterPoint Energy natural gas utilities shown. (Gas service lines are not shown). This signature not be used for conflict verification.

Signature valid for six months.

Date

CenterPoint Energy/UNDERGROUND Electrical Facilities Verification ONLY. (This signature verifies existing underground facilities – not to be used for conflict verification)

Signature valid for six months.

Date

Approved for AT&T underground conduit facilities only.
Signature valid for one year.

PAPE–DAWSON
2107 CITYWEST BLVD, 3RD FLR I HOUSTON, TX 77042 I 713.428.2400
TEXAS ENGINEERING FIRM #470 I TEXAS SURVEYING FIRM #10028800

GAI
Gupta & Associates, Inc.
CONSULTING ENGINEERING
Registration No. F-2593
302 Dennis St.
Houston, Texas 77006
Tel: 713-636-2936
Fax: 713-636-2987
email: hforouzan@gaiconsulting.com

THIS DOCUMENT IS RELEASED FOR INTERIM REVIEW UNDER THE AUTHORIZATION OF HOSS FOROUZAN, P.E. (#77748) AND IS **NOT TO BE USED FOR CONSTRUCTION.**

SURVEYED BY:
PAPE–DAWSON ENGINEERS
FB NO. 24–018

CITY OF HOUSTON
HOUSTON PUBLIC WORKS

LIFT STATION REHABILITATION AND RECONSTRUCTION
BEN'S BRANCH, WOODLAND RIDGE, ELMWOOD HILLS, FOREST SHORES, TRAIL RIVER, RIVERLAWN

ELECTRICAL

WOODLAND RIDGE LIFT STATION TYPICAL JUNCTION BOX DETAILS

WBS NUMBER	FOR CITY OF HOUSTON USE ONLY
R–000267–0180–3	
DRAWING SCALE	
AS NOTED	
CITY OF HOUSTON PM	
BRENDA JOHNSON P.E.	
SHEET NO. XX OF XX	

WR–E–07

FILE PATH: O:\H8107_Lift Station Rehabilitation And Reconstruction (Pape Dawson)\6 Drawings\Electrical\Working\Woodland Ridge\H8107_WR–E–07.dwg

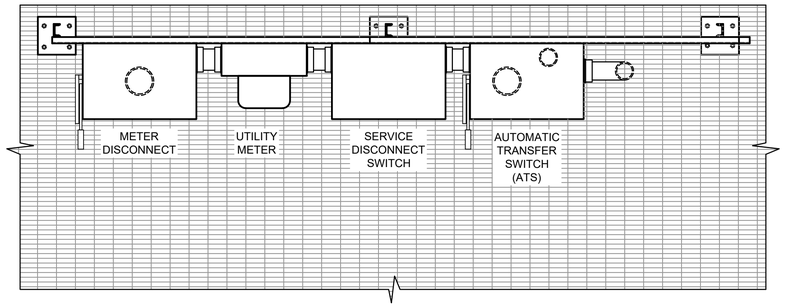

PLAN

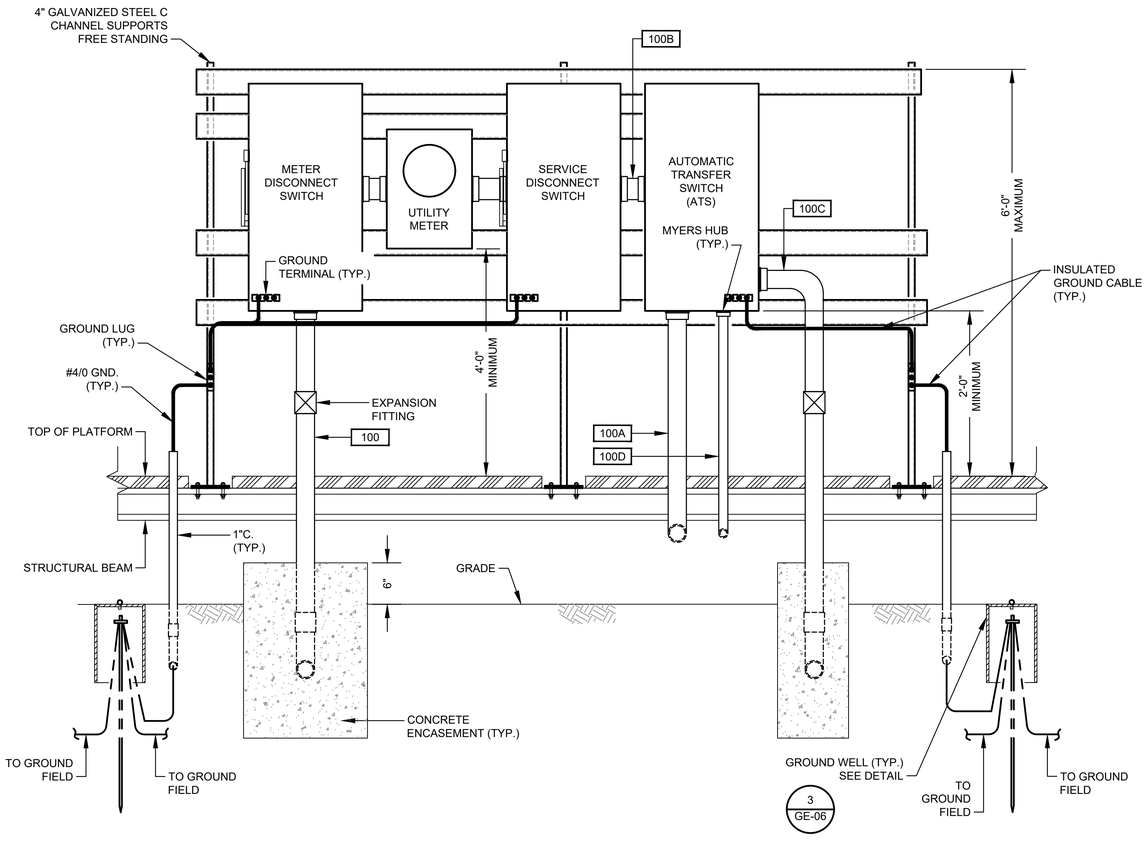

SERVICE MOUNTING RACK

DETAIL 1
NTS. -

NO.	DATE	REVISION	APP.

NOTICE:
FOR YOUR SAFETY, YOU ARE REQUIRED BY TEXAS LAW TO CALL 811 AT LEAST 48 HOURS BEFORE YOU DIG SO THAT UNDERGROUND LINES CAN BE MARKED. THIS SIGNATURE DOES NOT FULFILL YOUR OBLIGATION TO CALL 811

VERIFICATION OF PRIVATE UTILITY LINES

Date

CenterPoint Energy natural gas utilities shown. (Gas service lines are not shown). This signature not be used for conflict verification.

Signature valid for six months.

Date

Date

CenterPoint Energy/UNDERGROUND Electrical Facilities Verification ONLY. (This signature verifies existing underground facilities – not to be used for conflict verification)

Signature valid for six months.

Date

Approved for AT&T underground conduit facilities only.
Signature valid for one year.

PAPE–DAWSON
2107 CITYWEST BLVD, 3RD FLR I HOUSTON, TX 77042 I 713.428.2400
TEXAS ENGINEERING FIRM #470 I TEXAS SURVEYING FIRM #10028800

GAI
Gupta & Associates, Inc.
CONSULTING ENGINEERING
Registration No. F-2593
302 Dennis St.
Houston, Texas 77006
Tel: 713-636-2936
Fax: 713-636-2987
email: hforouzan@gaiconsulting.com

SURVEYED BY:
PAPE–DAWSON ENGINEERS
FB NO. 24–018

THIS DOCUMENT IS RELEASED FOR INTERIM REVIEW UNDER THE AUTHORIZATION OF HOSS FOROUZAN, P.E. (#77748) AND IS **NOT TO BE USED FOR CONSTRUCTION.**

CITY OF HOUSTON
HOUSTON PUBLIC WORKS

LIFT STATION REHABILITATION AND RECONSTRUCTION
BEN'S BRANCH, WOODLAND RIDGE, ELMWOOD HILLS, FOREST SHORES, TRAIL RIVER, RIVERLAWN

ELECTRICAL

WOODLAND RIDGE LIFT STATION ELECTRICAL SERVICE RACK DETAIL

WBS NUMBER	FOR CITY OF HOUSTON USE ONLY
R–000267–0180–3	
DRAWING SCALE	
AS NOTED	
CITY OF HOUSTON PM	
BRENDA JOHNSON P.E.	
SHEET NO. XX OF XX	

WR–E–08

FILE PATH: O:\H8107_Lift Station Rehabilitation And Reconstruction (Pape Dawson)\6 Drawings\Electrical\Working\Woodland Ridge\H8107_WR–E–08.dwg

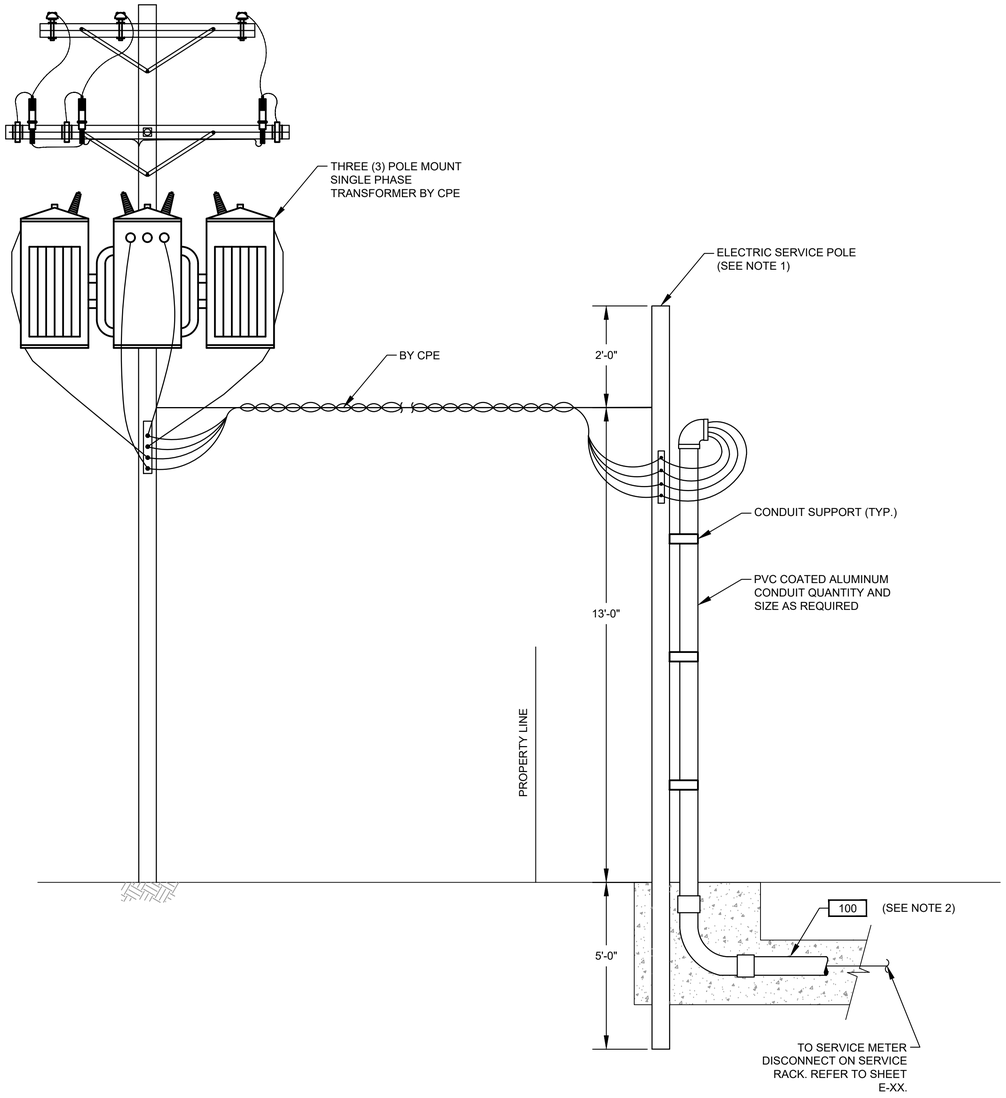

ELECTRICAL SERVICE ENTRANCE

DETAIL 1 / NTS. / -

NOTES:

1. WOODEN POLE 20' LONG. TOP DIAMETER 6", BOTTOM DIAMETER 8" PROVIDED AND INSTALLED BY ELECTRICAL CONTRACTOR.
2. ELECTRICAL SERVICE FEEDER PROVIDED AND INSTALLED BY ELECTRICAL CONTRACTOR. COORDINATE WITH CPE FOR THE REQUIREMENTS OF THE INSTALLATION.

NO.	DATE	REVISION	APP.

NOTICE:
FOR YOUR SAFETY, YOU ARE REQUIRED BY TEXAS LAW TO CALL 811 AT LEAST 48 HOURS BEFORE YOU DIG SO THAT UNDERGROUND LINES CAN BE MARKED. THIS SIGNATURE DOES NOT FULFILL YOUR OBLIGATION TO CALL 811

VERIFICATION OF PRIVATE UTILITY LINES

Date

CenterPoint Energy natural gas utilities shown. (Gas service lines are not shown). This signature not be used for conflict verification.

Signature valid for six months.

Date

CenterPoint Energy/UNDERGROUND Electrical Facilities Verification ONLY. (This signature verifies existing underground facilities – not to be used for conflict verification)

Signature valid for six months.

Date

Approved for AT&T underground conduit facilities only.
Signature valid for one year.

PAPE–DAWSON
2107 CITYWEST BLVD, 3RD FLR I HOUSTON, TX 77042 I 713.428.2400
TEXAS ENGINEERING FIRM #470 I TEXAS SURVEYING FIRM #10028800

GAI
Gupta & Associates, Inc.
CONSULTING ENGINEERING
Registration No. F-2593
302 Dennis St.
Houston, Texas 77006
Tel: 713-636-2936
Fax: 713-636-2987
email: hforouzan@gaiconsulting.com

THIS DOCUMENT IS RELEASED FOR INTERIM REVIEW UNDER THE AUTHORIZATION OF HOSS FOROUZAN, P.E. (#77748) AND IS **NOT TO BE USED FOR CONSTRUCTION.**

SURVEYED BY:
PAPE–DAWSON ENGINEERS
FB NO. 24–018

CITY OF HOUSTON
HOUSTON PUBLIC WORKS

LIFT STATION REHABILITATION AND RECONSTRUCTION
BEN'S BRANCH, WOODLAND RIDGE, ELMWOOD HILLS, FOREST SHORES, TRAIL RIVER, RIVERLAWN

ELECTRICAL

WOODLAND RIDGE LIFT STATION SERVICE POLE DETAIL

WBS NUMBER	FOR CITY OF HOUSTON USE ONLY
R–000267–0180–3	
DRAWING SCALE	
AS NOTED	
CITY OF HOUSTON PM	
BRENDA JOHNSON P.E.	
SHEET NO. XX OF XX	

WR–E–09

FILE PATH: O:\H8107_Lift Station Rehabilitation And Reconstruction (Pape Dawson)\6 Drawings\Electrical\Working\Woodland Ridge\H8107_WR–E–09.dwg

	DESCRIPTION	SERVICE		ROUTING			CONDUIT & WIRE SIZE
		VOLTAGE	AMPS OR HP	FROM	TO	VIA	
A	MAIN BONDING JUMPER	--	--	MAIN FUSED DISCONNECT NEUTRAL	MAIN FUSED DISCONNECT GROUND	--	#4 CU GND.
B	EQUIPMENT BONDING JUMPER	--	--	MCC/POWER PANEL ENCLOSURE	POWER/CONTROL PANEL & EQUIPMENT	--	#4 CU GND.
C	GROUNDED ELECTRODE CONDUCTOR	--	--	GROUNDING ELECTRODE	MAIN SERVICE FUSED DISCONNECT GROUNDING	--	#4 CU GND.
100	SERVICE ENTRANCE	480V	400A	UTILITY POWER SERVICE	METER DISCONNECT		3 #3/0 AWG., #4 NEUT. #3 GND., 2-1/2" C.
100A	UTILITY POWER ENTRANCE	480V	200A	SERVICE DISCONNECT SWITCH	ATS	--	3 #3/0 AWG., #4 NEUT. #3 GND., 2-1/2" C.
100B	GENERATOR POWER ENTRANCE	480V	200A	STANDBY GENERATOR	ATS	--	3 #3/0 AWG., #4 NEUT. #3 GND., 2-1/2" C.
100C	480V POWER	480V	200A	ATS	CONTROL PANEL	--	3 #3/0 AWG., #4 NEUT. #3 GND., 2-1/2" C.
100D	GENERATOR CONTROL POWER	120/240V	50A	STANDBY GENERATOR	LIGHTING PANEL	--	3#4 AWG., #8 GND., 1-1/2"C.
100E	GENERATOR CONTROLS	24VDC	--	STANDBY GENERATOR	ATS	--	6#14 AWG., #14 GND., 3/4"C.
100F	NORMAL/EMERGENCY POWER STATUS	24VDC	--	ATS	CONTROL PANEL	--	4#14 AWG., #14 GND., 3/4"C.
100G	GENERATOR ANNUNCIATOR	24VDC	--	STANDBY GENERATOR	CONTROL PANEL	--	16#14 AWG., #14 GND., 1"C.
101	GROUND ELECTRODE CONDUCTOR	--	--	MCC ENCLOSURE	GROUND FIELD	--	#2/0 GND.
102	GROUND ELECTRODE CONDUCTOR	--	--	BUILDING STEEL	GROUND FIELD	--	#2/0 GND.
103	BUILDING GROUNDING	--	--	BUILDING REBAR	LIGHTNING GROUND ROD	--	#2/0 GND.
104	GROUND ELECTRODE CONDUCTOR	--	--	CONTROL PANEL	GROUND FIELD	--	#2/0 GND.
105	COMMUNICATION	--	--	COMMUNICATION POLE	CONTROL PANEL	--	1-1/2"C. CAT 5E
105A	COMMUNICATION POLE LIGHT	120V	--	COMMUNICATION POLE	LIGHTING PANEL	--	2#12, #12G, 1"C.
200	PUMP NO. 1 POWER	480V	10 HP	PUMP NO. 1	PUMP NO. 1 JUNCTION BOX	--	MANUFACTURER CABLE IN 2-1/2"C.
201	PUMP NO. 1 CONTROLS	120V	--	PUMP NO. 1	PUMP NO. 1 JUNCTION BOX	--	MANUFACTURER CABLE IN 2-1/2"C.
202	PUMP NO. 1 POWER	480V	10 HP	PUMP NO. 1 JUNCTION BOX	PUMP STARTER	--	3#6 AWG.,, #8 GND., 1-1/2"C.
203	COMBINED PUMP CONTROLS	120V	--	PUMP NO. 1 JUNCTION BOX	PUMP STARTER	COMBINE PUMP 1 & 2 CONTROLS	COMBINE 200 & 300 TAG WIRING, 8#14, 1"C.
300	PUMP NO. 2 POWER	480V	10 HP	PUMP NO. 2	PUMP NO. 2 JUNCTION BOX	--	MANUFACTURER CABLE IN 2-1/2"C.
301	PUMP NO. 2 CONTROLS	120V	--	PUMP NO. 2	PUMP NO. 2 JUNCTION BOX	--	MANUFACTURER CABLE IN 2-1/2"C.
302	PUMP NO. 2 POWER	480V	10 HP	PUMP NO. 2 JUNCTION BOX	PUMP STARTER	--	3#6 AWG., #8 GND., 1-1/2"C.
400	ODOR CONTROL FEEDER	480V	30A	CONTROL PANEL	ODOR CONTROL PANEL	--	3#10 AWG., #10 GND., 1"C.
600	LIGHTING PANEL FEEDER	480V	40A	MOTOR CONTROL CENTER	LIGHTING TRANSFORMER	--	2#6, #6 GND., 1"C.
601	LIGHTING PANEL GROUND	--	--	LIGHTING PANEL	GROUND FIELD	--	#8 GND., 1"C.
602	LIGHTING PANEL FEEDER	120/240V	--	LIGHTING TRANSFORMER	LIGHTING PANEL	--	3#4, #6 GND., 1-1/4" C.
900	INTRUSION ALARM	24VDC	--	MOTION SWITCH	CONTROL PANEL	--	2#14, 3/4" C.
1000	LEVEL TRANSMITTER	24VDC	--	TRANSMITTER JUNCTION BOX	TRANSMITTER JUNCTION BOX	--	MANUFACTURER'S CABLE IN 2-1/2"C
1001	LEVEL TRANSMITTER	24VDC	--	TRANSMITTER JUNCTION BOX	TRANSMITTER JUNCTION BOX	--	MANUFACTURER'S CABLE IN 2-1/2"C
1002	COMBINED LEVEL TRANSMITTERS & FLOAT SWITCH	24VDC	--	CONTROL PANEL	TRANSMITTER JUNCTION BOX	--	2-TRI, 4#14, 2" C.
1003	WELL FLOAT SWITCHES	24VDC	--	TRANSMITTER JUNCTION BOX	FLOAT SWITCH NO.1 & NO.2	--	MANUFACTURER'S CABLE IN 2-1/2"C
1100	120VAC FOR RECEPTACLE	-	--	LIGHTING PANEL	RECEPTACLE NEXT TO TRANSMITTER J-BOX	--	2#12, #12G, 1" C.
1200	120VAC FOR RECEPTACLE	-	--	LIGHTING PANEL	RECEPTACLE NEXT TO PUMP NO.2 J-BOX	--	2#12, #12G, 1" C.
1300	SITE LIGHTING	120VAC	--	LIGHTING PANEL	SITE LIGHTS	--	2#12, #12G, 1" C.
1400	ODOR CONTROL SIGNAL	24VDC	--	CONTROL PANEL	ODOR CONTROL PANEL	--	8#14, #14 GND., 1" C.
1401	ODOR CONTROL BLOWER	480V	3 HP	ODOR CONTROL PANEL	ODOR CONTROL BLOWER	--	3#12, #12G, 1" C.
1500	CHEMICAL INJECTION PUMP	120V	--	LIGHTING PANEL	CHEMICAL INJECTION PUMP	--	2#12, #12G, 1" C.
1501	LEVEL TRANSMITTER FOR CHEMICAL TANK	24VDC	--	CONTROL PANEL	LEVEL TRANSMITTER "LT-3" ON CHEMICAL TANK	--	1-TRI, 1" C.

NO.	DATE	REVISION	APP.

NOTICE:
FOR YOUR SAFETY, YOU ARE REQUIRED BY TEXAS LAW TO CALL 811 AT LEAST 48 HOURS BEFORE YOU DIG SO THAT UNDERGROUND LINES CAN BE MARKED. THIS SIGNATURE DOES NOT FULFILL YOUR OBLIGATION TO CALL 811

VERIFICATION OF PRIVATE UTILITY LINES

Date

CenterPoint Energy natural gas utilities shown. (Gas service lines are not shown). This signature not be used for conflict verification.

Signature valid for six months.

Date

CenterPoint Energy/UNDERGROUND Electrical Facilities Verification ONLY. (This signature verifies existing underground facilities – not to be used for conflict verification)

Signature valid for six months.

Date

Approved for AT&T underground conduit facilities only.
Signature valid for one year.

PAPE–DAWSON
2107 CITYWEST BLVD, 3RD FLR I HOUSTON, TX 77042 I 713.428.2400
TEXAS ENGINEERING FIRM #470 I TEXAS SURVEYING FIRM #10028800

GAI
Gupta & Associates, Inc.
CONSULTING ENGINEERING
Registration No. F-2593
302 Dennis St.
Houston, Texas 77006
Tel: 713-636-2936
Fax: 713-636-2987
email: hforouzan@gaiconsulting.com

SURVEYED BY:
PAPE–DAWSON ENGINEERS
FB NO. 24–018

THIS DOCUMENT IS RELEASED FOR INTERIM REVIEW UNDER THE AUTHORIZATION OF HOSS FOROUZAN, P.E. (#77748) AND IS **NOT TO BE USED FOR CONSTRUCTION.**

CITY OF HOUSTON
HOUSTON PUBLIC WORKS

LIFT STATION REHABILITATION AND RECONSTRUCTION
BEN'S BRANCH, WOODLAND RIDGE, ELMWOOD HILLS, FOREST SHORES, TRAIL RIVER, RIVERLAWN

ELECTRICAL

WOODLAND RIDGE LIFT STATION CONDUIT SCHEDULE

WBS NUMBER	FOR CITY OF HOUSTON USE ONLY
R–000267–0180–3	
DRAWING SCALE	
AS NOTED	
CITY OF HOUSTON PM	
BRENDA JOHNSON P.E.	
SHEET NO. XX OF XX	

WR–E–10

FILE PATH: O:\H8107_Lift Station Rehabilitation And Reconstruction (Pape Dawson)\6 Drawings\Electrical\Working\Woodland Ridge\H8107_WR–E–10.dwg

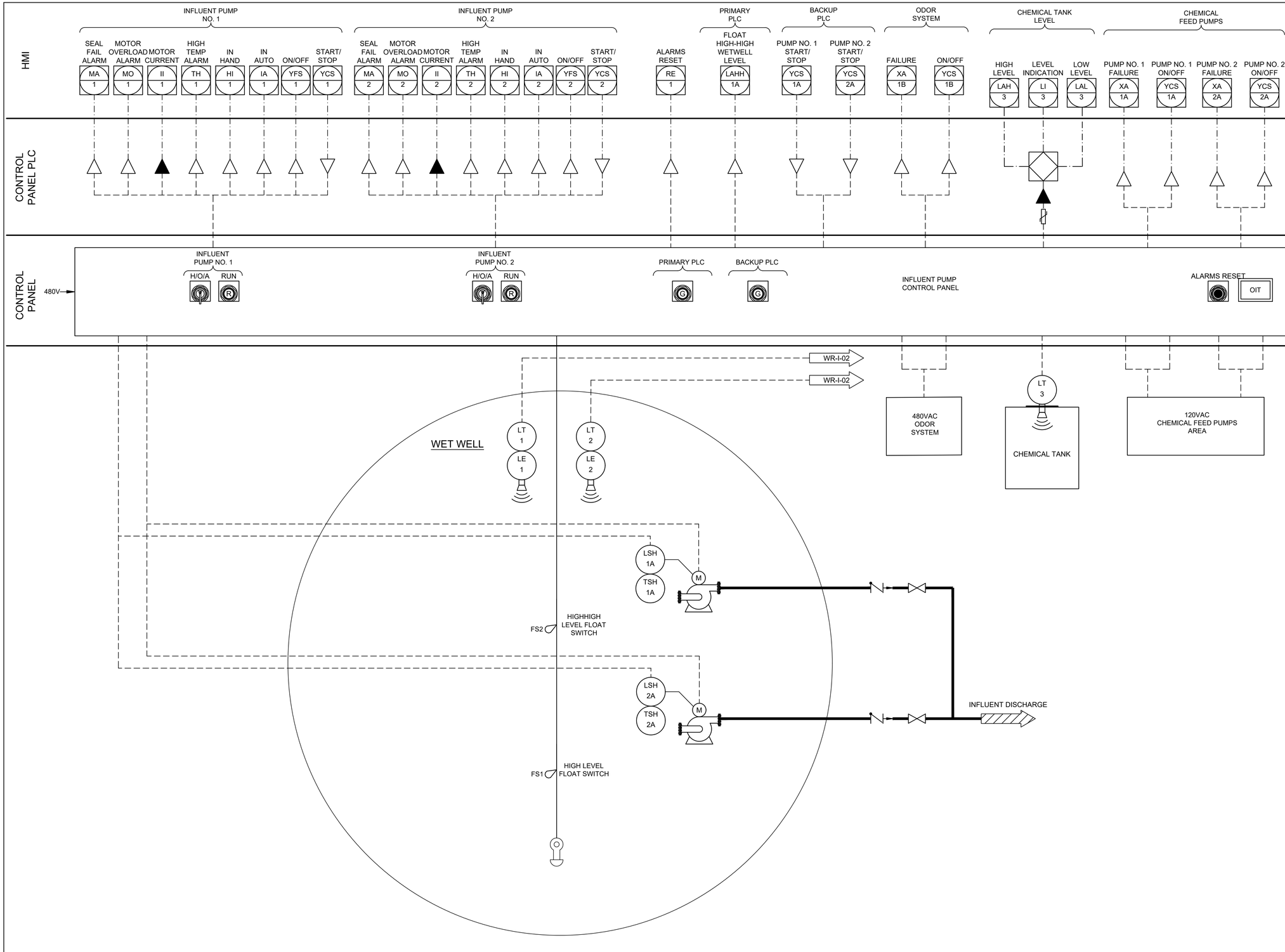

NO. | DATE | REVISION | APP.

NOTICE:
FOR YOUR SAFETY, YOU ARE REQUIRED BY TEXAS LAW TO CALL 811 AT LEAST 48 HOURS BEFORE YOU DIG SO THAT UNDERGROUND LINES CAN BE MARKED. THIS SIGNATURE DOES NOT FULFILL YOUR OBLIGATION TO CALL 811

VERIFICATION OF PRIVATE UTILITY LINES

Date

CenterPoint Energy natural gas utilities shown. (Gas service lines are not shown). This signature not be used for conflict verification.

Signature valid for six months.

Date

CenterPoint Energy/UNDERGROUND Electrical Facilities Verification ONLY. (This signature verifies existing underground facilities – not to be used for conflict verification)

Signature valid for six months.

Date

Approved for AT&T underground conduit facilities only.
Signature valid for one year.

PAPE–DAWSON
2107 CITYWEST BLVD, 3RD FLR I HOUSTON, TX 77042 I 713.428.2400
TEXAS ENGINEERING FIRM #470 I TEXAS SURVEYING FIRM #10028800

GAI
Gupta & Associates, Inc.
CONSULTING ENGINEERING
Registration No. F-2593
302 Dennis St.
Houston, Texas 77006
Tel: 713-636-2936
Fax: 713-636-2987
email: hforouzan@gaiconsulting.com

THIS DOCUMENT IS RELEASED FOR INTERIM REVIEW UNDER THE AUTHORIZATION OF HOSS FOROUZAN, P.E. (#77748) AND IS **NOT TO BE USED FOR CONSTRUCTION.**

SURVEYED BY:
PAPE–DAWSON ENGINEERS
FB NO. 24–018

CITY OF HOUSTON
HOUSTON PUBLIC WORKS

LIFT STATION REHABILITATION AND RECONSTRUCTION
BEN'S BRANCH, WOODLAND RIDGE, ELMWOOD HILLS, FOREST SHORES, TRAIL RIVER, RIVERLAWN

INSTRUMENTATION

WOODLAND RIDGE LIFT STATION INSTRUMENTATION P&ID DIAGRAM–I

WBS NUMBER	FOR CITY OF HOUSTON USE ONLY
R–000267–0180–3	
DRAWING SCALE	
AS NOTED	
CITY OF HOUSTON PM	
BRENDA JOHNSON P.E.	
SHEET NO. XX OF XX	

WR–I–01

FILE PATH: O:\H8107_Lift Station Rehabilitation And Reconstruction (Pape Dawson)\6 Drawings\Instrumentation And Control\Working\Woodland Ridge\H8107_WR–I–01.dwg

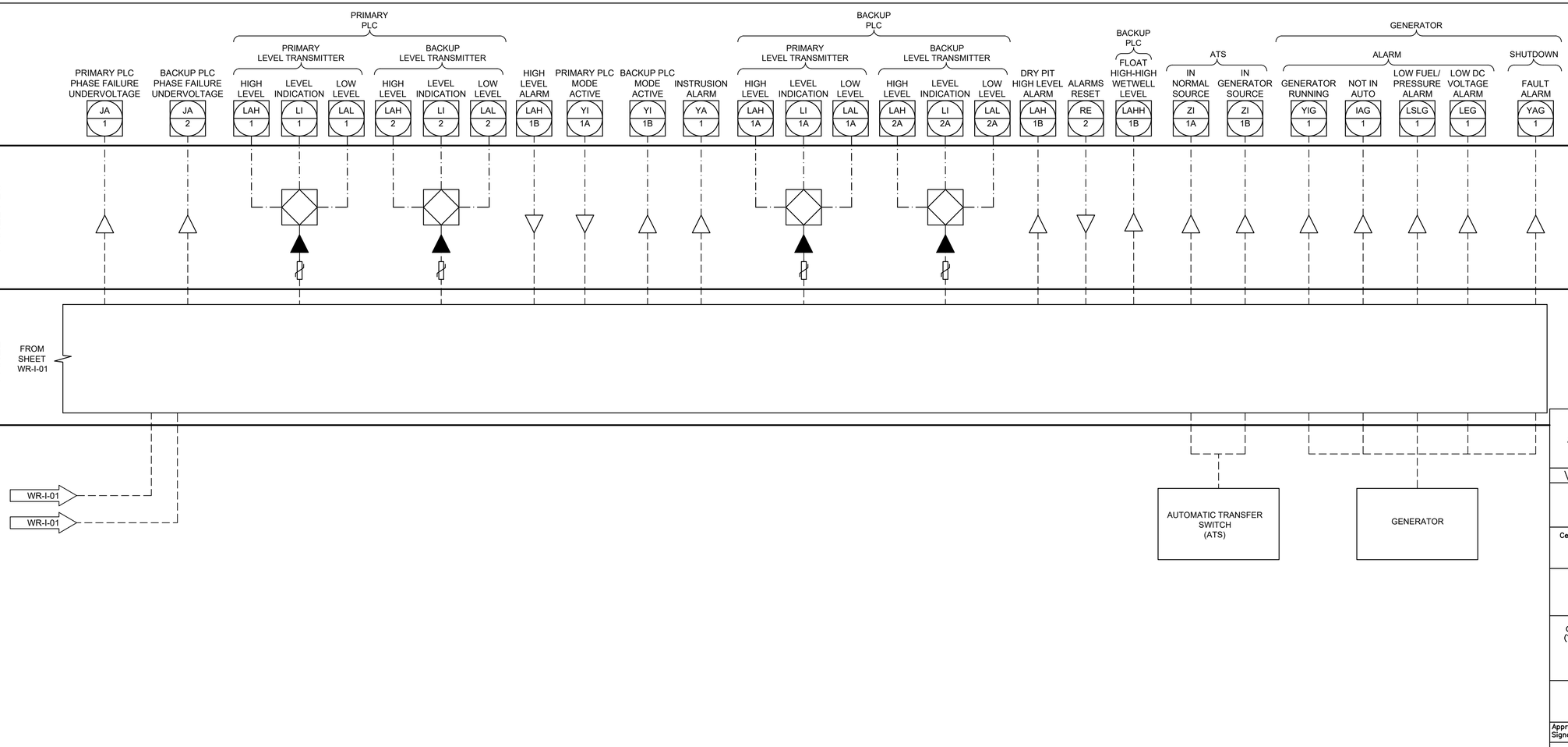

NO.	DATE	REVISION	APP.

NOTICE:
FOR YOUR SAFETY, YOU ARE REQUIRED BY TEXAS LAW TO CALL 811 AT LEAST 48 HOURS BEFORE YOU DIG SO THAT UNDERGROUND LINES CAN BE MARKED. THIS SIGNATURE DOES NOT FULFILL YOUR OBLIGATION TO CALL 811

VERIFICATION OF PRIVATE UTILITY LINES

Date

CenterPoint Energy natural gas utilities shown. (Gas service lines are not shown). This signature not be used for conflict verification.

Signature valid for six months.

Date

CenterPoint Energy/UNDERGROUND Electrical Facilities Verification ONLY. (This signature verifies existing underground facilities – not to be used for conflict verification)

Signature valid for six months.

Date

Approved for AT&T underground conduit facilities only.
Signature valid for one year.

PAPE–DAWSON
2107 CITYWEST BLVD, 3RD FLR I HOUSTON, TX 77042 I 713.428.2400
TEXAS ENGINEERING FIRM #470 I TEXAS SURVEYING FIRM #10028800

GAI
Gupta & Associates, Inc.
CONSULTING ENGINEERING
Registration No. F-2593
302 Dennis St.
Houston, Texas 77006
Tel: 713-636-2936
Fax: 713-636-2987
email: hforouzan@gaiconsulting.com

SURVEYED BY:
PAPE–DAWSON ENGINEERS
FB NO. 24–018

THIS DOCUMENT IS RELEASED FOR INTERIM REVIEW UNDER THE AUTHORIZATION OF HOSS FOROUZAN, P.E. (#77748) AND IS **NOT TO BE USED FOR CONSTRUCTION.**

CITY OF HOUSTON
HOUSTON PUBLIC WORKS

LIFT STATION REHABILITATION AND RECONSTRUCTION
BEN'S BRANCH, WOODLAND RIDGE, ELMWOOD HILLS, FOREST SHORES, TRAIL RIVER, RIVERLAWN

INSTRUMENTATION

WOODLAND RIDGE LIFT STATION INSTRUMENTATION P&ID DIAGRAM–II

WBS NUMBER	FOR CITY OF HOUSTON USE ONLY
R–000267–0180–3	
DRAWING SCALE	
AS NOTED	
CITY OF HOUSTON PM	
BRENDA JOHNSON P.E.	
SHEET NO. XX OF XX	

WR–I–02

FILE PATH: O:\H8107_Lift Station Rehabilitation And Reconstruction (Pape Dawson)\6 Drawings\Instrumentation And Control\Working\Woodland Ridge\H8107_WR–I–02.dwg

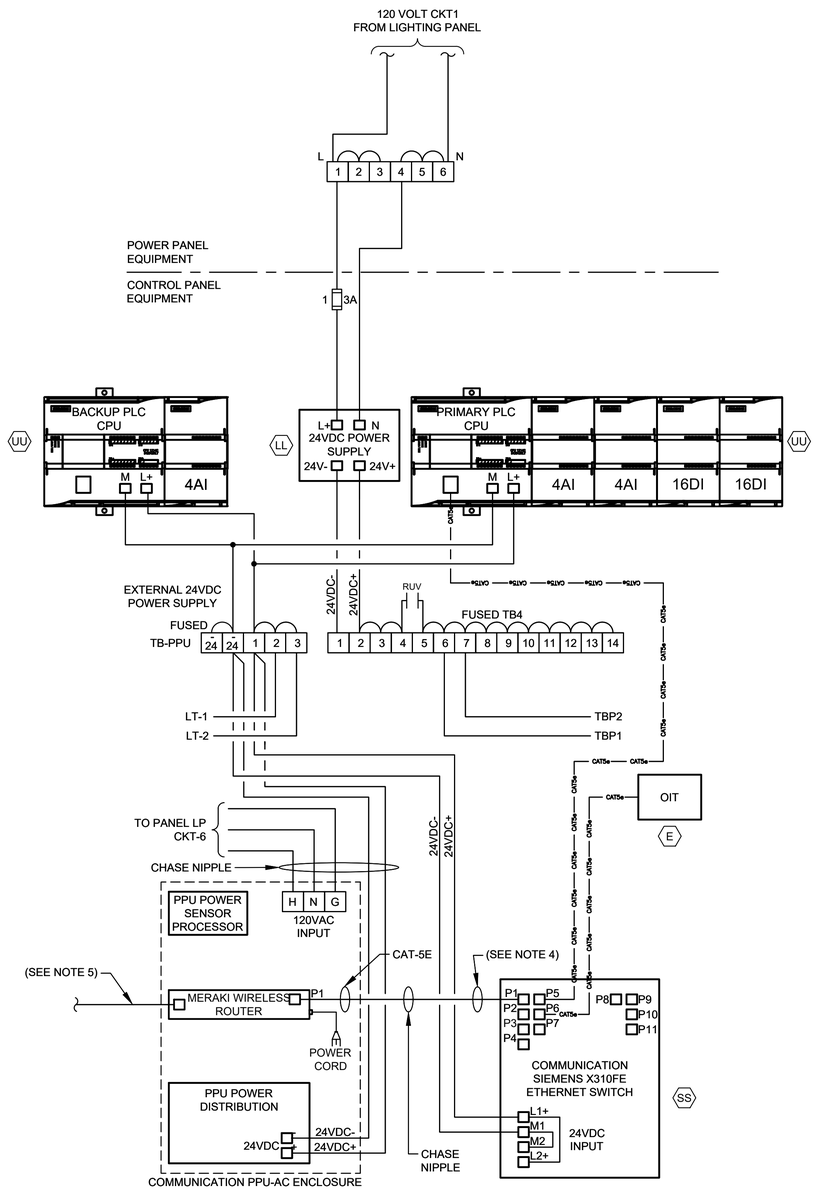

CONTROL POWER &
COMMUNICATIONS WIRING

DIAGRAM

NTS

(SEE NOTE 2 & 6)

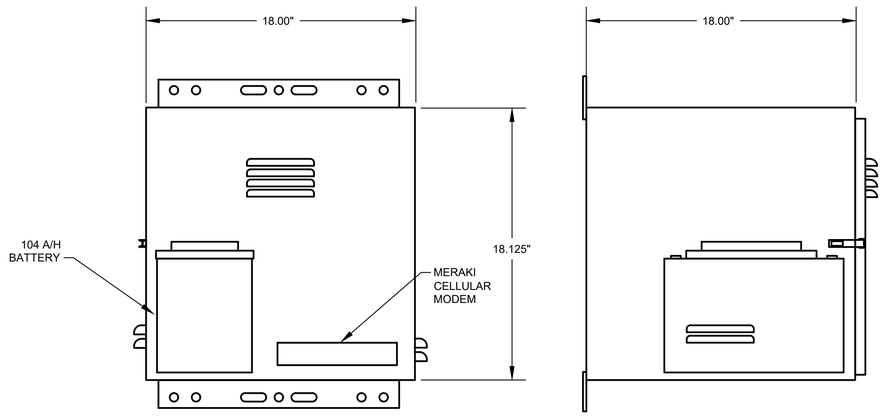

PPU-AC
CONTROL ENCLOSURE

ELEVATION

NTS

(SEE NOTE 7)

NOTES:

1. FOR DESCRIPTION AND RATINGS OF ITEMS INDICATED WITH ITEM TAG, SEE DEVICE RATINGS SCHEDULE.
2. REFER TO SPEC SECTION 16120 FOR CONDUCTOR COLOR CODE.
3. THE PLC POWER SUPPLY SHALL FEED THE 24VDC I/O.
4. ETHERNET CABLE FOR MERAKI CELLULAR ROUTER (P1).
5. POE CABLE TO RADIO.
6. COMMUNICATION PPU-AC & SCADA SHALL BE PROVIDED BY CONTRACTOR INCLUDING TO RUN CONDUITS & WIRES.
7. COORDINATE WITH VENDOR TO PROVIDE PROPER VENTILATION WHERE APPLICABLE.

NO.	DATE	REVISION	APP.

NOTICE:
FOR YOUR SAFETY, YOU ARE REQUIRED BY TEXAS LAW TO CALL 811 AT LEAST 48 HOURS BEFORE YOU DIG SO THAT UNDERGROUND LINES CAN BE MARKED. THIS SIGNATURE DOES NOT FULFILL YOUR OBLIGATION TO CALL 811

VERIFICATION OF PRIVATE UTILITY LINES

Date

CenterPoint Energy natural gas utilities shown. (Gas service lines are not shown). This signature not be used for conflict verification.

Signature valid for six months.

Date

CenterPoint Energy/UNDERGROUND Electrical Facilities Verification ONLY. (This signature verifies existing underground facilities – not to be used for conflict verification)

Signature valid for six months.

Date

Approved for AT&T underground conduit facilities only.
Signature valid for one year.

PAPE–DAWSON
2107 CITYWEST BLVD, 3RD FLR I HOUSTON, TX 77042 I 713.428.2400
TEXAS ENGINEERING FIRM #470 I TEXAS SURVEYING FIRM #10028800

GAI
Gupta & Associates, Inc.
CONSULTING ENGINEERING
Registration No. F-2593
302 Dennis St.
Houston, Texas 77006
Tel: 713-636-2936
Fax: 713-636-2987
email: hforouzan@gaiconsulting.com

SURVEYED BY:
PAPE–DAWSON ENGINEERS
FB NO. 24–018

THIS DOCUMENT IS RELEASED FOR INTERIM REVIEW UNDER THE AUTHORIZATION OF HOSS FOROUZAN, P.E. (#77748) AND IS **NOT TO BE USED FOR CONSTRUCTION.**

CITY OF HOUSTON
HOUSTON PUBLIC WORKS

LIFT STATION REHABILITATION AND RECONSTRUCTION
BEN'S BRANCH, WOODLAND RIDGE, ELMWOOD HILLS, FOREST SHORES, TRAIL RIVER, RIVERLAWN

INSTRUMENTATION

WOODLAND RIDGE LIFT STATION COMMUNICATIONS DIAGRAM

WBS NUMBER	FOR CITY OF HOUSTON USE ONLY
R–000267–0180–3	
DRAWING SCALE	
AS NOTED	
CITY OF HOUSTON PM	
BRENDA JOHNSON P.E.	
SHEET NO. XX OF XX	

WR–I–03

FILE PATH: O:\H8107_Lift Station Rehabilitation And Reconstruction (Pape Dawson)\6 Drawings\Instrumentation And Control\Working\Woodland Ridge\H8107_WR–I–03.dwg

EQUIPMENT AND DEVICE SCHEDULE

ITEM	QUANTITY	DESCRIPTION
A	1	PANEL BOARD, 120/240V, 1 PHASE, 3 WIRE, 100A, 12 CKTS
B	2	FULL VOLTAGE, NON-REVERSING, SINGLE SPEED, AUTOMATIC MOTOR STARTER W/120 VOLT CONTROL COIL, NEMA SIZE AS SCHEDULED.
C	2	TIME DELAY RELAY WITH THREE FORM C CONTACTS, 120VAC COIL AND 11 PIN SOCKET BASE.
D	1	SINGLE CHANNEL INTRINSICALLY SAFE RELAY
E	1	PROGRAMMING SCREEN (OIT)
F	2	HAND-OFF-AUTO SWITCH, 3 POSITION, HEAVY-DUTY, OILTIGHT WITH 2 SETS OF CONTACT BLOCKS (PUMP CONTROL)
G	2	INDICATING LIGHT, HEAVY DUTY, OILTIGHT, RED, 24 VDC, LED, WITH "RUN" LEGEND
H	1	PERPETUAL POWER UNIT (PPU)
I	1	PUMP ALARM RESET PUSHBUTTON
J	2	SWITCH FOR CABINET LIGHT, 120V, 20A, SPST
K	3	DUPLEX RECEPTACLE, 120V, 20A, 2 WIRE, GROUNDED
L	2	24" LED STRIP LIGHT 120V SUITABLE FOR ZERO DEGREE OPERATION.
M	1	SURGE PROTECTOR - INCOMING POWER
N	*	NOT USED.
P	2	CURRENT TRANSFORMER, RATIO AS SCHEDULED W/4-20mA OUTPUT.
Q	12	TERMINAL BLOCKS, SIZED FOR MOTOR POWER REQUIREMENTS
R	*	RELAY WITH THREE FORM C CONTACTS, AND 11 PIN SOCKET BASE
S	*	NOT USED.
T	*	NAMEPLATES, SEE SPECIFICATIONS (SEE NAMEPLATE SCHEDULE)
U	2	SOLID STATE MOTOR OVERLOAD RELAY
V	6	FUSE HOLDER & FUSES - PHASE FAILURE
W	1	NEMA 3R GASKETED ALUMINUM ENCLOSURE WITHOUT VENTS 72"H x 48"W x 36"D
X	1	DOOR MOUNTED ROTARY HANDLE DISCONNECT SWITCH (SUITABLE FOR ENVIRONMENT)
Y	1	THERMAL-MAGNETIC MOLDED CASE MAIN CIRCUIT BREAKER, SIZE AS SCHEDULED
Z	2	ADJUSTABLE INSTANTENOUS TRIP MOTOR CIRCUIT PROTECTOR, SIZE AS SCHEDULED
AA	*	TERMINAL BLOCKS
BB	2	EXTERNAL OVERLOAD RESET PUSHBUTTON MECHANISM
CC	2	ANALOG I/O SURGE SUPPRESSOR
DD	1	WIRE DUCT 2" WIDE x 2" DEEP MINIMUM
EE	1	THERMAL-MAGNETIC MODLED CASE CIRCUIT BREAKER FOR LIGHTING TRANSFORMER, SIZE AS SCHEDULED
FF	1	GROUND BUS
GG	1	25 KVA, 480 - 240/120V,1ϕ, 3W DRY TYPE NEMA 3R ENCLOSURE TRANSFORMER (PAD MOUNTED)
HH	*	NOT USED.
II	1	120VAC - 24VAC POWER SUPPLY (AS REQUIRED)
JJ	11	CARTRIDGE FUSES & FUSE HOLDER
KK	8	QUARTER TURN CAPTIVE DOOR CLOSURE
LL	1	120VAC - 24VDC PLC POWER SUPPLY 5A
MM	2	MOTION SWITCH
NN	*	NOT USED
PP	2	INDICATING LED LIGHT, HEAVY DUTY, OILTIGHT, GREEN, 24 VDC, LED WITH " PRIMARY PLC" & "BACKUP PLC" LEGEND
QQ	*	NOT USED
RR	*	NOT USED
SS	1	COMMUNICATION ETHERNET SWITCH
TT	1	POWER SURGE PROTECTOR - CONTROL POWER
UU	2	PROGRAMMABLE LOGIC CONTROLLER WITH EXPANSION UNIT
VV	1	PHASE AND UNDER VOLTAGE MONITOR
WW	*	FUSED TERMINAL BLOCKS
XX	2	PUMP PROTECTION MODULE RATED FOR CLASS I, DIVISION I
YY	3	ANALOG SIGNAL ISOLATOR
ZZ	-	NOT USED
AB	-	NOT USED.
AC	1	POWER DISTRIBUTION BLOCK
AD	1	NEUTRAL LUG
AE	1	6" EXHAUST FAN, 120V, STAINLESS FILTERS & GRILL PACKAGE W/BUG GUARD
AF	1	T-STAT FOR EXHAUST FAN

* - AS SCHEDULED

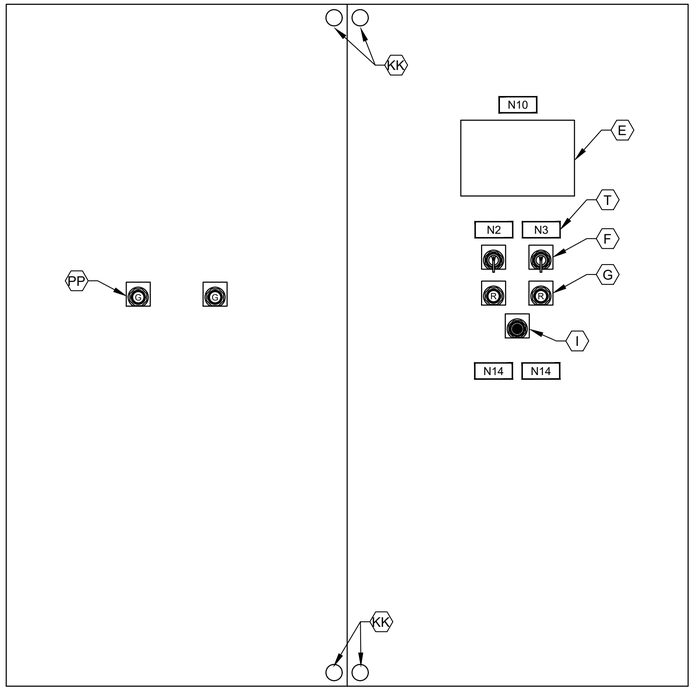

CONTROL PANEL FRONT INNER DOOR

ELEVATION

NTS

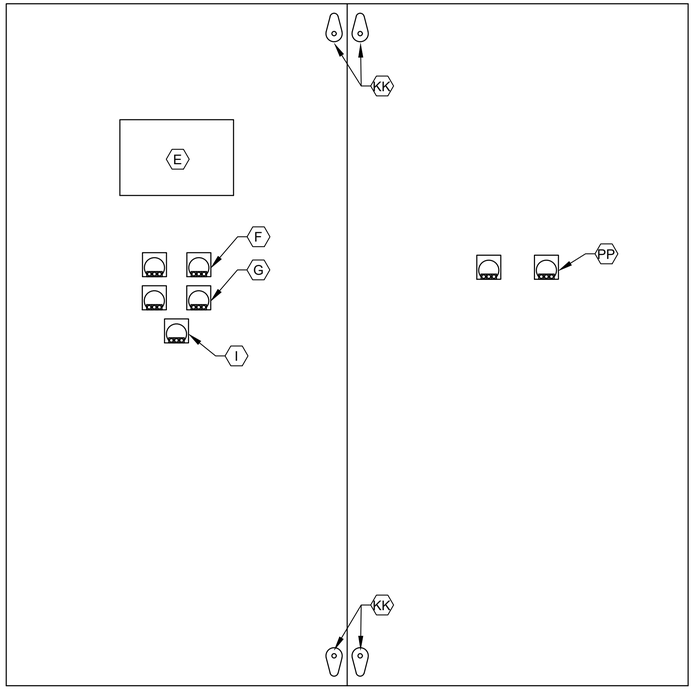

CONTROL PANEL BACK INNER DOOR

ELEVATION

NTS

NOTES:

1. NAMEPLATES SHALL BE MOUNTED TO PANELS USING STAINLESS STEEL HARDWARE.
2. REFER SPECIFICATIONS FOR ALL PANEL COMPONENTS.

NO.	DATE	REVISION	APP.

NOTICE:
FOR YOUR SAFETY, YOU ARE REQUIRED BY TEXAS LAW TO CALL 811 AT LEAST 48 HOURS BEFORE YOU DIG SO THAT UNDERGROUND LINES CAN BE MARKED. THIS SIGNATURE DOES NOT FULFILL YOUR OBLIGATION TO CALL 811

VERIFICATION OF PRIVATE UTILITY LINES

Date

CenterPoint Energy natural gas utilities shown. (Gas service lines are not shown). This signature not be used for conflict verification.

Signature valid for six months.

Date

CenterPoint Energy/UNDERGROUND Electrical Facilities Verification ONLY. (This signature verifies existing underground facilities – not to be used for conflict verification)

Signature valid for six months.

Date

Approved for AT&T underground conduit facilities only.
Signature valid for one year.

PAPE-DAWSON
2107 CITYWEST BLVD, 3RD FLR I HOUSTON, TX 77042 I 713.428.2400
TEXAS ENGINEERING FIRM #470 I TEXAS SURVEYING FIRM #10028800

GAI
Gupta & Associates, Inc.
CONSULTING ENGINEERING
Registration No. F-2593
302 Dennis St.
Houston, Texas 77006
Tel: 713-636-2936
Fax: 713-636-2987
email: hforouzan@gaiconsulting.com

SURVEYED BY:
PAPE-DAWSON ENGINEERS
FB NO. 24-018

THIS DOCUMENT IS RELEASED FOR INTERIM REVIEW UNDER THE AUTHORIZATION OF HOSS FOROUZAN, P.E. (#77748) AND IS **NOT TO BE USED FOR CONSTRUCTION.**

CITY OF HOUSTON
HOUSTON PUBLIC WORKS

LIFT STATION REHABILITATION AND RECONSTRUCTION
BEN'S BRANCH, WOODLAND RIDGE, ELMWOOD HILLS, FOREST SHORES, TRAIL RIVER, RIVERLAWN

INSTRUMENTATION

WOODLAND RIDGE LIFT STATION CONTROL CABINET EQUIPMENT LAYOUT & SCHEDULE

WBS NUMBER	FOR CITY OF HOUSTON USE ONLY
R-000267-0180-3	
DRAWING SCALE	
AS NOTED	
CITY OF HOUSTON PM	
BRENDA JOHNSON P.E.	
SHEET NO. XX OF XX	

WR-I-04

FILE PATH: O:\H8107_Lift Station Rehabilitation And Reconstruction (Pape Dawson)\6 Drawings\Instrumentation And Control\Working\Woodland Ridge\H8107_WR-I-04.dwg

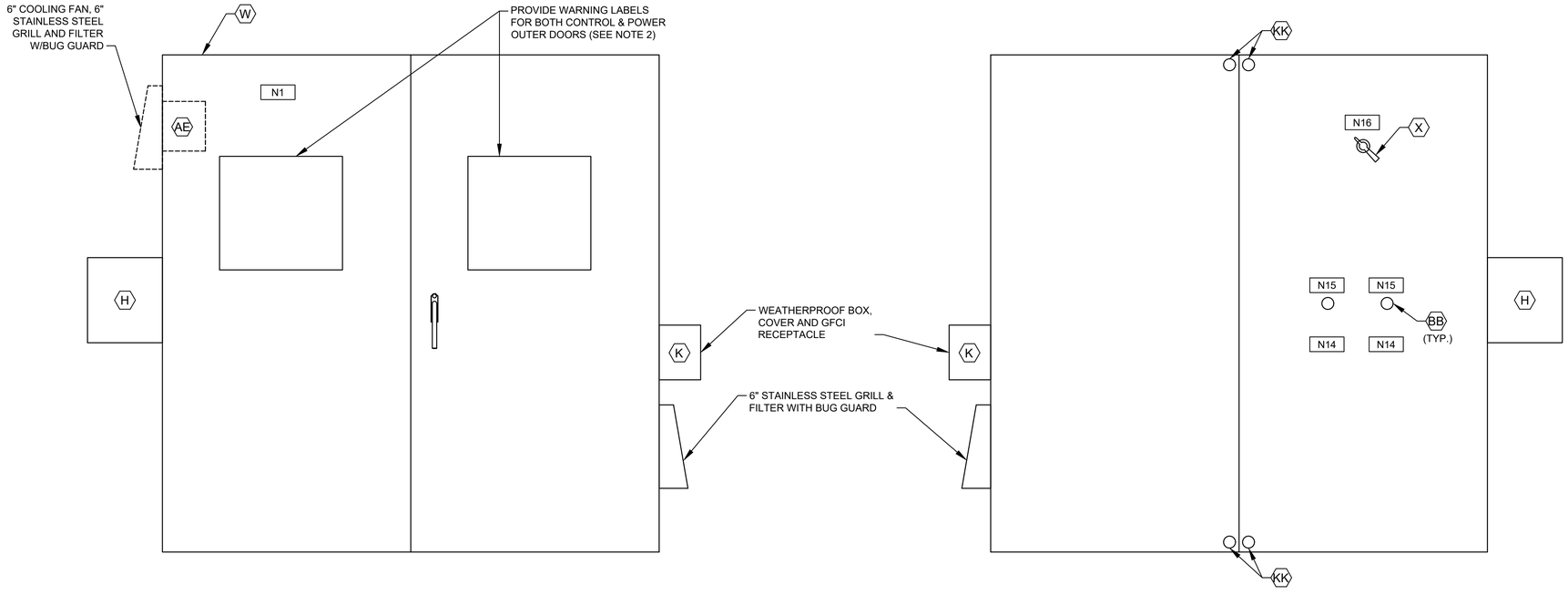

CONTROL CABINET (CONTROL SIDE)
OUTER DOOR

ELEVATION

NTS

CONTROL CABINET (POWER SIDE)
INNER DOOR

ELEVATION

NTS

(SEE NOTE 1)

NOTES:

1. SEE SHEET WR-I-04 FOR EQUIPMENT SCHEDULE.
2. REFER TO NEC SECTIONS 110.16 & 110.21

NAMEPLATE SCHEDULE

DESIGNATION	ENGRAVED	DESIGNATION	ENGRAVED
N1	PUMP STATION DESIGNATION	N8	NOT USED.
N2	PUMP NO. 1	N9	NOT USED.
N3	PUMP NO. 2	N10	PROGRAMMING SCREEN
N4	NOT USED.	N11	NOT USED.
N5	NOT USED.	N12	PRIMARY PLC
N6	NOT USED.	N13	BACKUP PLC
N7	NOT USED.	N14	MOTOR DATA HORSEPOWER (OUTPUT) ---------- RPM AT FULL LOAD ---------- TIME RATING ---------- FREQUENCY ---------- NUMBER OF PHASES ---------- MODEL NUMBER ---------- RATED VOLTAGE ---------- SERVICE FACTOR ---------- FULL LOAD AMPS ---------- INSULATION CLAS ---------- NEMA DESIGN LETTER ---------- TEMPERATURE RISE ---------- NEMA FRAME SIZE ---------- DATE OF MANUFACTURE ---------- THERMO PROTECTION (IF REQUIRED) -- MOISTURE PROTECTION (IF REQUIRED)-
		N15	EXTERNAL OVERLOAD RESET PUSH BUTTON MECHANISM
		N16	MAIN BREAKER

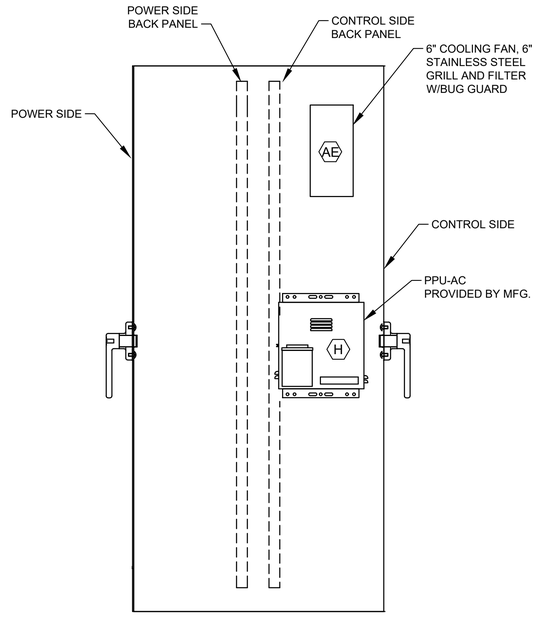

CONTROL CABINET (LEFT SIDE VIEW)

ELEVATION

NTS

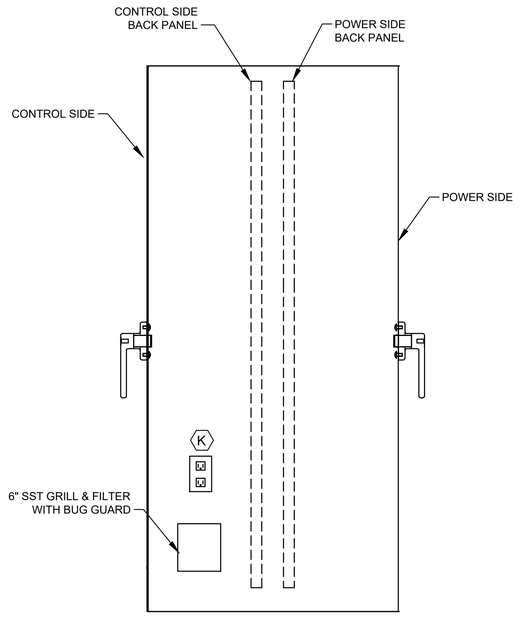

CONTROL CABINET (RIGHT SIDE VIEW)

ELEVATION

NTS

NO.	DATE	REVISION	APP.

NOTICE:
FOR YOUR SAFETY, YOU ARE REQUIRED BY TEXAS LAW TO CALL 811 AT LEAST 48 HOURS BEFORE YOU DIG SO THAT UNDERGROUND LINES CAN BE MARKED. THIS SIGNATURE DOES NOT FULFILL YOUR OBLIGATION TO CALL 811

VERIFICATION OF PRIVATE UTILITY LINES

Date

CenterPoint Energy natural gas utilities shown. (Gas service lines are not shown). This signature not be used for conflict verification.

Signature valid for six months.

Date

CenterPoint Energy/UNDERGROUND Electrical Facilities Verification ONLY. (This signature verifies existing underground facilities – not to be used for conflict verification)

Signature valid for six months.

Date

Approved for AT&T underground conduit facilities only.
Signature valid for one year.

PAPE–DAWSON
2107 CITYWEST BLVD, 3RD FLR I HOUSTON, TX 77042 I 713.428.2400
TEXAS ENGINEERING FIRM #470 I TEXAS SURVEYING FIRM #10028800

GAI
Gupta & Associates, Inc.
CONSULTING ENGINEERING
Registration No. F-2593
302 Dennis St.
Houston, Texas 77006
Tel: 713-636-2936
Fax: 713-636-2987
email: hforouzan@gaiconsulting.com

SURVEYED BY:
PAPE–DAWSON ENGINEERS
FB NO. 24–018

THIS DOCUMENT IS RELEASED FOR INTERIM REVIEW UNDER THE AUTHORIZATION OF HOSS FOROUZAN, P.E. (#77748) AND IS **NOT TO BE USED FOR CONSTRUCTION.**

CITY OF HOUSTON

HOUSTON PUBLIC WORKS

LIFT STATION REHABILITATION AND RECONSTRUCTION
BEN'S BRANCH, WOODLAND RIDGE, ELMWOOD HILLS, FOREST SHORES, TRAIL RIVER, RIVERLAWN

INSTRUMENTATION

WOODLAND RIDGE LIFT STATION CONTROL CABINET EQUIPMENT LAYOUT–I

WBS NUMBER	FOR CITY OF HOUSTON USE ONLY
R–000267–0180–3	
DRAWING SCALE	
AS NOTED	
CITY OF HOUSTON PM	
BRENDA JOHNSON P.E.	
SHEET NO. XX OF XX	

WR–I–05

FILE PATH: O:\H8107_Lift Station Rehabilitation And Reconstruction (Pape Dawson)\6 Drawings\Instrumentation And Control\Working\Woodland Ridge\H8107_WR–I–05.dwg

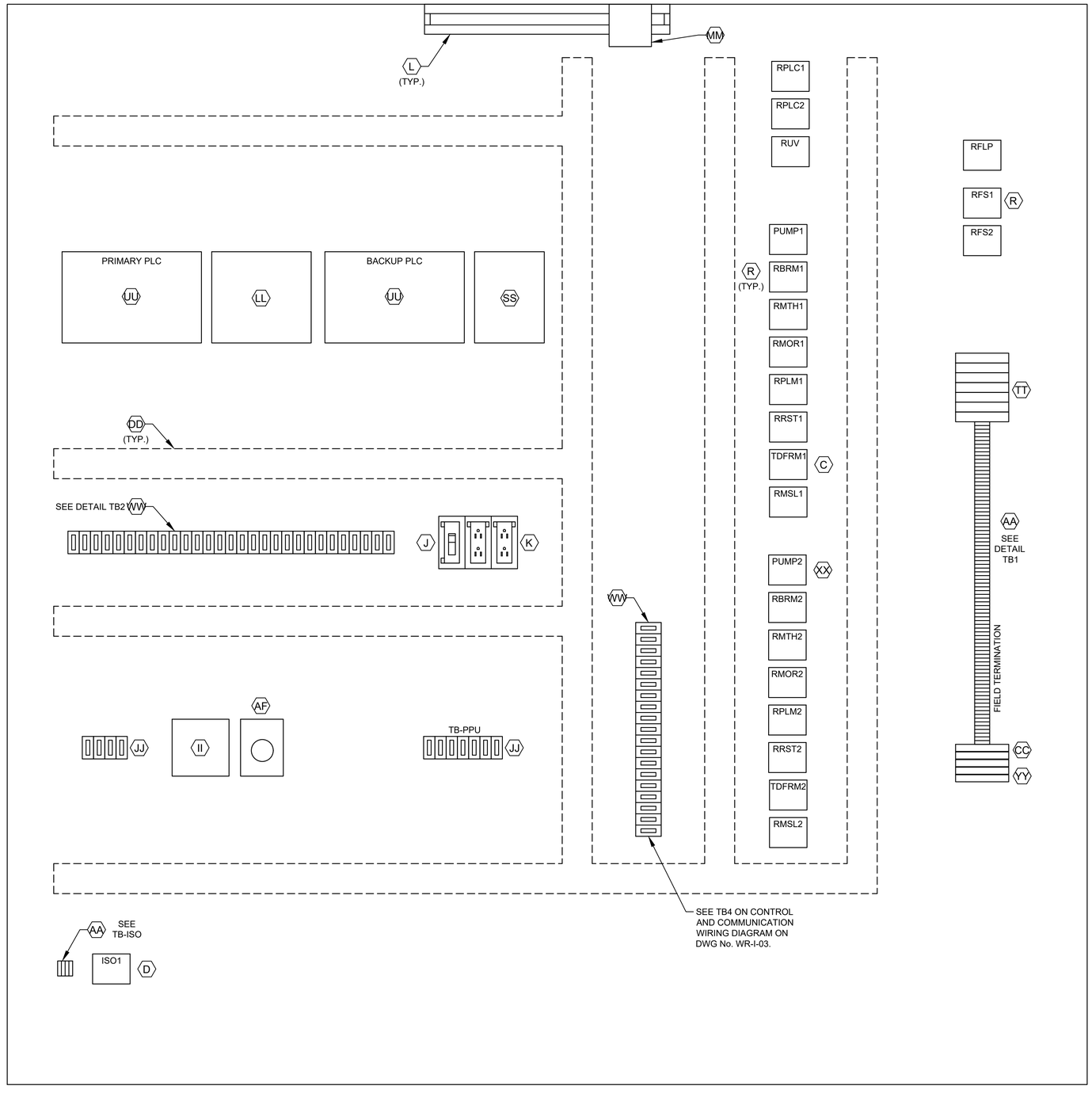

CONTROL PANEL
ELEVATION

DETAIL TB1
L1A
L1N
SPARE
3
3N
49
50
51
52
53
54
1004
1
24V-
24V-
1002
2
11
1001
1001A
12
1003
1003A
1002
1004
18
3N
19
20
36
36N
41
42
43
44
SPARE
L1A
L1N
103
104
105
106
107
108
110
113
115
116
119
SPARE
203
204
205
206
207
208
210
213
215
216
219

ALL L AND N FOR EACH PUMP CONTROL TO BE FUSED

DETAIL TB2
36A
37A
50
52
54
52A
54A
L+
M
35B
38B
41B
47B
13B
13AB
13GB
L+
M
14B
14AB
14GB
L+
M
13
13A
13G
14
14A
14G
SPARE
18
SPARE
28
29
32
35B
33
42
44
SPARE
103
104
115
109
110
118
120
121
122
123
SPARE
209
210
211
218
220
222
223

DETAIL TB-ISO
1500
1501
1503
1504

LEGEND	
TAG	DESCRIPTION
RMTH	MOTOR HIGH TEMPERATURE ALARM RELAY
RPLM	PLC PUMP RUN RELAY
RRST	PUMP RESET AUX RELAY
RPLC	PLC MODE AUX RELAY
RMOR	MOTOR OVERLOAD ALARM RELAY
RBRM	BACKUP SYSTEM RUN RELAY
RUV	UNDER VOLTAGE RELAY
ISO	INTRINSICALLY SAFE RELAY
RFS	PUMP RUN FLOAT SWITCH RELAY
TDFRM	TIMER FLOAT SWITCH RUN RELAY
RMSL	MOTOR SEAL LEAK ALARM RELAY
RFLP	FLOAT LOCKOUT PUMP RELAY

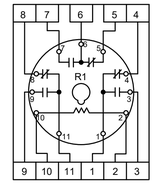

RELAY DETAIL
ITEM R

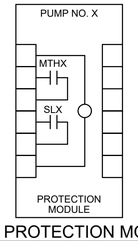

PUMP PROTECTION MODULE
DETAIL, ITEM XX

NOTE: REPLACE "X" WITH APPROPRIATE PUMP NO.

NOTES:

1. SEE SHEET WR-I-04 FOR EQUIPMENT SCHEDULE.

NO.	DATE	REVISION	APP.

NOTICE:
FOR YOUR SAFETY, YOU ARE REQUIRED BY TEXAS LAW TO CALL 811 AT LEAST 48 HOURS BEFORE YOU DIG SO THAT UNDERGROUND LINES CAN BE MARKED. THIS SIGNATURE DOES NOT FULFILL YOUR OBLIGATION TO CALL 811

VERIFICATION OF PRIVATE UTILITY LINES

Date

CenterPoint Energy natural gas utilities shown. (Gas service lines are not shown). This signature not be used for conflict verification.

Signature valid for six months.

Date

CenterPoint Energy/UNDERGROUND Electrical Facilities Verification ONLY. (This signature verifies existing underground facilities – not to be used for conflict verification)

Signature valid for six months.

Date

Approved for AT&T underground conduit facilities only.
Signature valid for one year.

PAPE–DAWSON
2107 CITYWEST BLVD, 3RD FLR I HOUSTON, TX 77042 I 713.428.2400
TEXAS ENGINEERING FIRM #470 I TEXAS SURVEYING FIRM #10028800

GAI
Gupta & Associates, Inc.
CONSULTING ENGINEERING
Registration No. F-2593
302 Dennis St.
Houston, Texas 77006
Tel: 713-636-2936
Fax: 713-636-2987
email: hforouzan@gaiconsulting.com

THIS DOCUMENT IS RELEASED FOR INTERIM REVIEW UNDER THE AUTHORIZATION OF HOSS FOROUZAN, P.E. (#77748) AND IS **NOT TO BE USED FOR CONSTRUCTION.**

SURVEYED BY:
PAPE–DAWSON ENGINEERS
FB NO. 24–018

CITY OF HOUSTON
HOUSTON PUBLIC WORKS

LIFT STATION REHABILITATION AND RECONSTRUCTION
BEN'S BRANCH, WOODLAND RIDGE, ELMWOOD HILLS, FOREST SHORES, TRAIL RIVER, RIVERLAWN

INSTRUMENTATION

WOODLAND RIDGE LIFT STATION CONTROL CABINET EQUIPMENT LAYOUT–II

WBS NUMBER	FOR CITY OF HOUSTON USE ONLY
R–000267–0180–3	
DRAWING SCALE	
AS NOTED	
CITY OF HOUSTON PM	
BRENDA JOHNSON P.E.	
SHEET NO. XX OF XX	

WR–I–06

FILE PATH: O:\H8107_Lift Station Rehabilitation And Reconstruction (Pape Dawson)\6 Drawings\Instrumentation And Control\Working\Woodland Ridge\H8107_WR–I–06.dwg

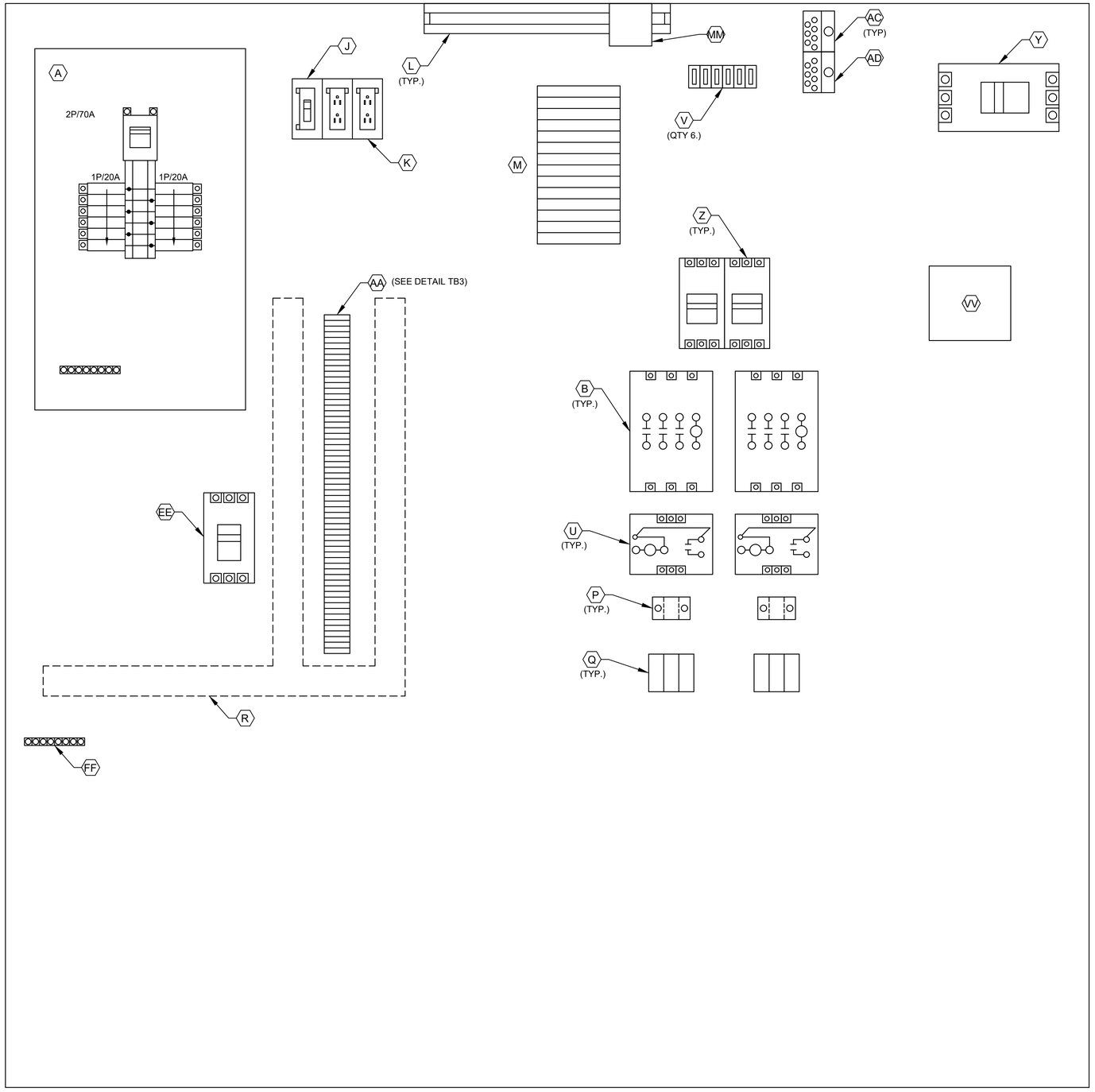

POWER PANEL
ELEVATION

3
18
L1A
L1N
SPARE
SPARE
103
104
105
106
107
108
110
113
115
116
119
SPARE
203
204
205
206
207
208
210
213
215
216
219
SPARE
SPARE
SPARE
SPARE
SPARE
SPARE
SPARE
SPARE
SPARE
SPARE

DETAIL TB3

NOTES:

1. SEE SHEET WR-I-04 FOR EQUIPMENT SCHEDULE.

NO.	DATE	REVISION	APP.

NOTICE:
FOR YOUR SAFETY, YOU ARE REQUIRED BY TEXAS LAW TO CALL 811 AT LEAST 48 HOURS BEFORE YOU DIG SO THAT UNDERGROUND LINES CAN BE MARKED. THIS SIGNATURE DOES NOT FULFILL YOUR OBLIGATION TO CALL 811

VERIFICATION OF PRIVATE UTILITY LINES

Date

CenterPoint Energy natural gas utilities shown. (Gas service lines are not shown). This signature not be used for conflict verification.

Signature valid for six months.

Date

CenterPoint Energy/UNDERGROUND Electrical Facilities Verification ONLY. (This signature verifies existing underground facilities – not to be used for conflict verification)

Signature valid for six months.

Date

Approved for AT&T underground conduit facilities only.
Signature valid for one year.

PAPE–DAWSON
2107 CITYWEST BLVD, 3RD FLR I HOUSTON, TX 77042 I 713.428.2400
TEXAS ENGINEERING FIRM #470 I TEXAS SURVEYING FIRM #10028800

GAI
Gupta & Associates, Inc.
CONSULTING ENGINEERING
Registration No. F-2593
302 Dennis St.
Houston, Texas 77006
Tel: 713-636-2936
Fax: 713-636-2987
email: hforouzan@gaiconsulting.com

SURVEYED BY:
PAPE–DAWSON ENGINEERS
FB NO. 24–018

THIS DOCUMENT IS RELEASED FOR INTERIM REVIEW UNDER THE AUTHORIZATION OF HOSS FOROUZAN, P.E. (#77748) AND IS **NOT TO BE USED FOR CONSTRUCTION.**

CITY OF HOUSTON
HOUSTON PUBLIC WORKS

LIFT STATION REHABILITATION AND RECONSTRUCTION
BEN'S BRANCH, WOODLAND RIDGE, ELMWOOD HILLS, FOREST SHORES, TRAIL RIVER, RIVERLAWN

INSTRUMENTATION

WOODLAND RIDGE LIFT STATION CONTROL CABINET EQUIPMENT LAYOUT–III

WBS NUMBER	FOR CITY OF HOUSTON USE ONLY
R–000267–0180–3	
DRAWING SCALE	
AS NOTED	
CITY OF HOUSTON PM	
BRENDA JOHNSON P.E.	
SHEET NO. XX OF XX	

WR–I–07

FILE PATH: O:\H8107_Lift Station Rehabilitation And Reconstruction (Pape Dawson)\6 Drawings\Instrumentation And Control\Working\Woodland Ridge\H8107_WR–I–07.dwg

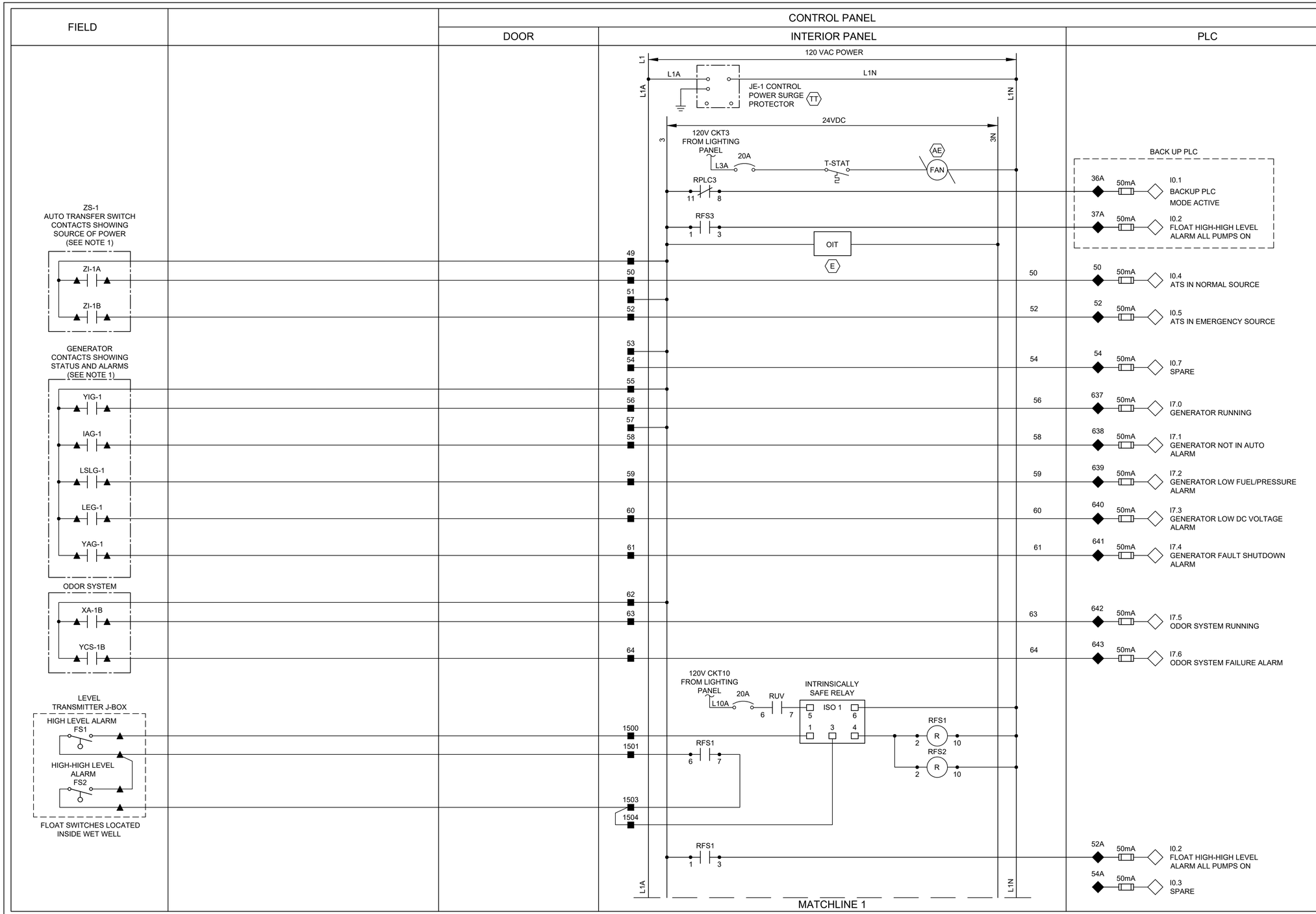

NOTES:

1. PROVIDE AUTO TRANSFER SWITCH DRY CONTACT.
2. ALL FLOAT CONTROL CIRCUIT WIRES COLOR SHALL BE YELLOW.

NO.	DATE	REVISION	APP.

NOTICE:
FOR YOUR SAFETY, YOU ARE REQUIRED BY TEXAS LAW TO CALL 811 AT LEAST 48 HOURS BEFORE YOU DIG SO THAT UNDERGROUND LINES CAN BE MARKED. THIS SIGNATURE DOES NOT FULFILL YOUR OBLIGATION TO CALL 811

VERIFICATION OF PRIVATE UTILITY LINES

Date

CenterPoint Energy natural gas utilities shown. (Gas service lines are not shown). This signature not be used for conflict verification.

Signature valid for six months.

Date

CenterPoint Energy/UNDERGROUND Electrical Facilities Verification ONLY. (This signature verifies existing underground facilities – not to be used for conflict verification)

Signature valid for six months.

Date

Approved for AT&T underground conduit facilities only.
Signature valid for one year.

PAPE–DAWSON
2107 CITYWEST BLVD, 3RD FLR I HOUSTON, TX 77042 I 713.428.2400
TEXAS ENGINEERING FIRM #470 I TEXAS SURVEYING FIRM #10028800

GAI
Gupta & Associates, Inc.
CONSULTING ENGINEERING
Registration No. F-2593
302 Dennis St.
Houston, Texas 77006
Tel: 713-636-2936
Fax: 713-636-2987
email: hforouzan@gaiconsulting.com

SURVEYED BY:
PAPE–DAWSON ENGINEERS
FB NO. 24–018

THIS DOCUMENT IS RELEASED FOR INTERIM REVIEW UNDER THE AUTHORIZATION OF HOSS FOROUZAN, P.E. (#77748) AND IS **NOT TO BE USED FOR CONSTRUCTION.**

CITY OF HOUSTON
HOUSTON PUBLIC WORKS

LIFT STATION REHABILITATION AND RECONSTRUCTION
BEN'S BRANCH, WOODLAND RIDGE, ELMWOOD HILLS, FOREST SHORES, TRAIL RIVER, RIVERLAWN

INSTRUMENTATION

WOODLAND RIDGE LIFT STATION CONTROL PANEL CONTROL WIRING DIAGRAM–I

WBS NUMBER	FOR CITY OF HOUSTON USE ONLY
R–000267–0180–3	
DRAWING SCALE	
AS NOTED	
CITY OF HOUSTON PM	
BRENDA JOHNSON P.E.	
SHEET NO. XX OF XX	

WR–I–08

LEGEND

- △ DEVICE OR FIELD TERMINAL LOCATED AT MOTOR
- ✳ DEVICE OR FIELD TERMINAL LOCATED REMOTE
- □ DEVICE OR FIELD TERMINAL LOCATED AT MCC/POWER PANEL
- ■ FIELD TERMINAL LOCATED AT CONTROL PANEL
- ▲ REMOTE TERMINAL
- ● DEVICE TERMINAL NO.
- ◆ PLC INTERFACE TERMINAL

FILE PATH: O:\H8107_Lift Station Rehabilitation And Reconstruction (Pape Dawson)\6 Drawings\Instrumentation And Control\Working\Woodland Ridge\H8107_WR–I–08.dwg

FIELD		CONTROL PANEL		
		DOOR	INTERIOR PANEL	PLC

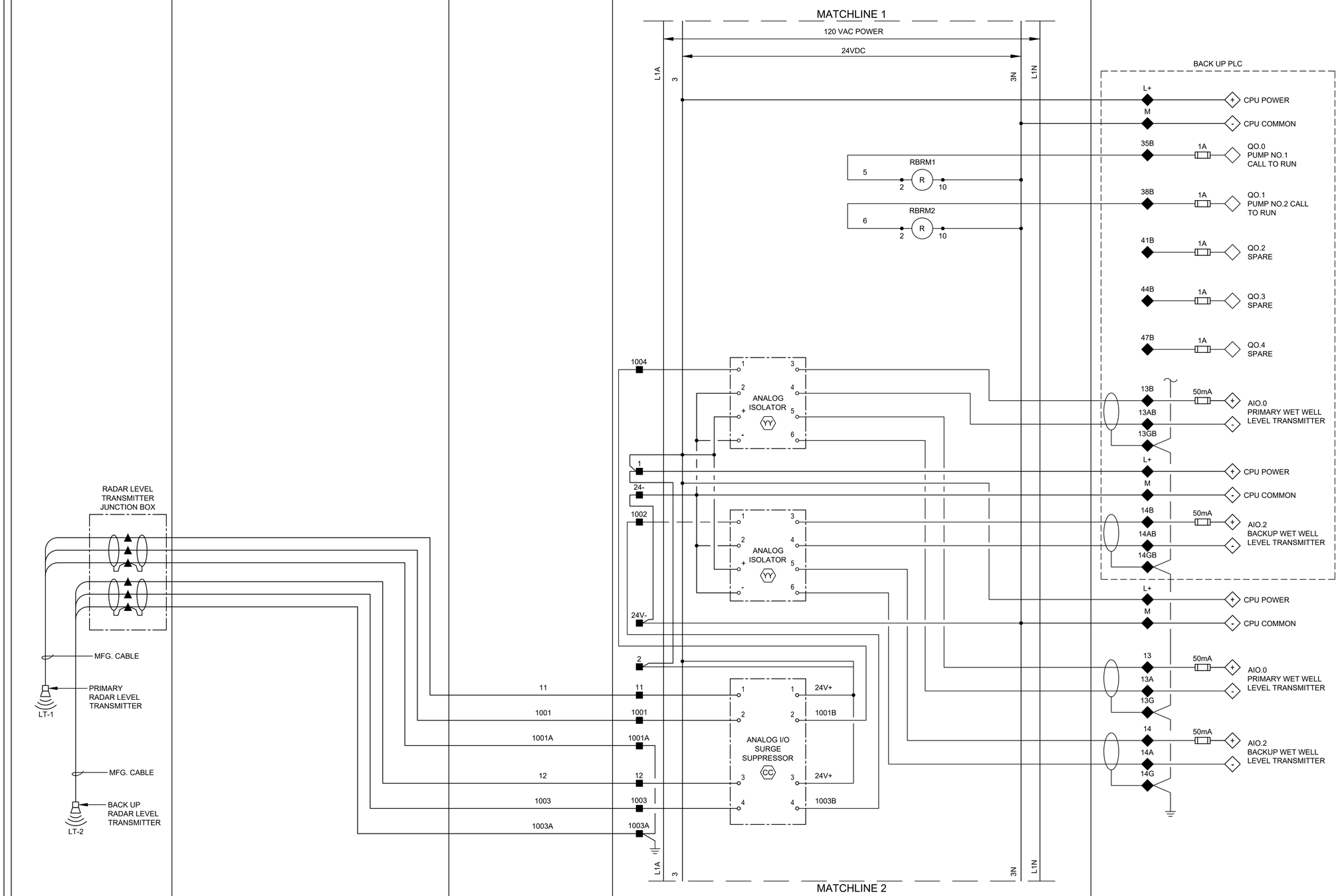

LEGEND

- △ DEVICE OR FIELD TERMINAL LOCATED AT MOTOR
- ✳ DEVICE OR FIELD TERMINAL LOCATED REMOTE
- □ DEVICE OR FIELD TERMINAL LOCATED AT MCC/POWER PANEL
- ■ FIELD TERMINAL LOCATED AT CONTROL PANEL
- ▲ REMOTE TERMINAL
- ● DEVICE TERMINAL NO.
- ◆ PLC INTERFACE TERMINAL

NO.	DATE	REVISION	APP.

NOTICE:
FOR YOUR SAFETY, YOU ARE REQUIRED BY TEXAS LAW TO CALL 811 AT LEAST 48 HOURS BEFORE YOU DIG SO THAT UNDERGROUND LINES CAN BE MARKED. THIS SIGNATURE DOES NOT FULFILL YOUR OBLIGATION TO CALL 811

VERIFICATION OF PRIVATE UTILITY LINES

Date

CenterPoint Energy natural gas utilities shown. (Gas service lines are not shown). This signature not be used for conflict verification.

Signature valid for six months.

Date

CenterPoint Energy/UNDERGROUND Electrical Facilities Verification ONLY. (This signature verifies existing underground facilities – not to be used for conflict verification)

Signature valid for six months.

Date

Approved for AT&T underground conduit facilities only.
Signature valid for one year.

PAPE–DAWSON
2107 CITYWEST BLVD, 3RD FLR I HOUSTON, TX 77042 I 713.428.2400
TEXAS ENGINEERING FIRM #470 I TEXAS SURVEYING FIRM #10028800

GAI
Gupta & Associates, Inc.
CONSULTING ENGINEERING
Registration No. F-2593
302 Dennis St.
Houston, Texas 77006
Tel: 713-636-2936
Fax: 713-636-2987
email: hforouzan@guiconsulting.com

SURVEYED BY:
PAPE–DAWSON ENGINEERS
FB NO. 24–018

THIS DOCUMENT IS RELEASED FOR INTERIM REVIEW UNDER THE AUTHORIZATION OF HOSS FOROUZAN, P.E. (#77748) AND IS **NOT TO BE USED FOR CONSTRUCTION.**

CITY OF HOUSTON
HOUSTON PUBLIC WORKS

LIFT STATION REHABILITATION AND RECONSTRUCTION
BEN'S BRANCH, WOODLAND RIDGE, ELMWOOD HILLS, FOREST SHORES, TRAIL RIVER, RIVERLAWN

INSTRUMENTATION

WOODLAND RIDGE LIFT STATION CONTROL PANEL CONTROL WIRING DIAGRAM–II

WBS NUMBER	FOR CITY OF HOUSTON USE ONLY
R–000267–0180–3	
DRAWING SCALE	
AS NOTED	
CITY OF HOUSTON PM	
BRENDA JOHNSON P.E.	
SHEET NO. XX OF XX	

WR–I–09

FILE PATH: O:\H8107_Lift Station Rehabilitation And Reconstruction (Pape Dawson)\6 Drawings\Instrumentation And Control\Working\Woodland Ridge\H8107_WR–I–09.dwg

FILE PATH: O:\H8107_Lift Station Rehabilitation And Reconstruction (Pape Dawson)\6 Drawings\Instrumentation And Control\Working\Woodland Ridge\H8107_WR-I-10.dwg

FIELD	POWER PANEL	CONTROL PANEL		
		DOOR	INTERIOR PANEL	PLC

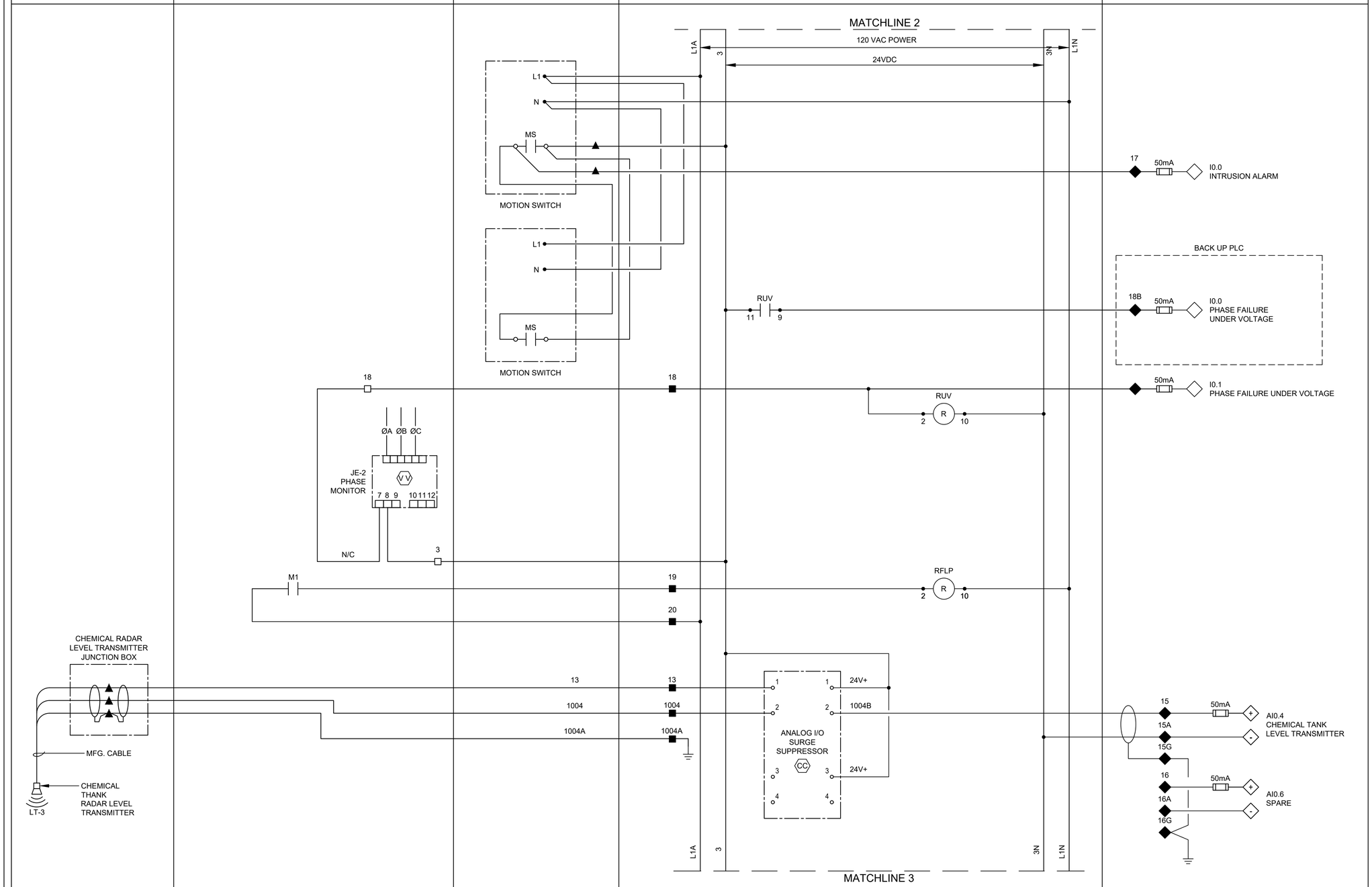

LEGEND

- △ DEVICE OR FIELD TERMINAL LOCATED AT MOTOR
- ✳ DEVICE OR FIELD TERMINAL LOCATED REMOTE
- □ DEVICE OR FIELD TERMINAL LOCATED AT MCC/POWER PANEL
- ■ FIELD TERMINAL LOCATED AT CONTROL PANEL
- ▲ REMOTE TERMINAL
- ● DEVICE TERMINAL NO.
- ◆ PLC INTERFACE TERMINAL

NO.	DATE	REVISION	APP.

NOTES:

1. PROVIDE ONE LIMIT SWITCH PER EXTERIOR CONTROL PANEL AND POWER PANEL DOOR, WIRED IN PARALLEL.

NOTICE:
FOR YOUR SAFETY, YOU ARE REQUIRED BY TEXAS LAW TO CALL 811 AT LEAST 48 HOURS BEFORE YOU DIG SO THAT UNDERGROUND LINES CAN BE MARKED. THIS SIGNATURE DOES NOT FULFILL YOUR OBLIGATION TO CALL 811

VERIFICATION OF PRIVATE UTILITY LINES

Date

CenterPoint Energy natural gas utilities shown. (Gas service lines are not shown). This signature not be used for conflict verification.

Signature valid for six months.

Date

CenterPoint Energy/UNDERGROUND Electrical Facilities Verification ONLY. (This signature verifies existing underground facilities – not to be used for conflict verification)

Signature valid for six months.

Date

Approved for AT&T underground conduit facilities only.
Signature valid for one year.

PAPE-DAWSON
2107 CITYWEST BLVD, 3RD FLR I HOUSTON, TX 77042 I 713.428.2400
TEXAS ENGINEERING FIRM #470 I TEXAS SURVEYING FIRM #10028800

GAI
Gupta & Associates, Inc.
CONSULTING ENGINEERING
Registration No. F-2593
302 Dennis St.
Houston, Texas 77006
Tel: 713-636-2936
Fax: 713-636-2987
email: hforouzan@gaiconsulting.com

SURVEYED BY:
PAPE-DAWSON ENGINEERS
FB NO. 24-018

THIS DOCUMENT IS RELEASED FOR INTERIM REVIEW UNDER THE AUTHORIZATION OF HOSS FOROUZAN, P.E. (#77748) AND IS **NOT TO BE USED FOR CONSTRUCTION.**

CITY OF HOUSTON
HOUSTON PUBLIC WORKS

LIFT STATION REHABILITATION AND RECONSTRUCTION
BEN'S BRANCH, WOODLAND RIDGE, ELMWOOD HILLS, FOREST SHORES, TRAIL RIVER, RIVERLAWN

INSTRUMENTATION

WOODLAND RIDGE LIFT STATION CONTROL PANEL CONTROL WIRING DIAGRAM–III

WBS NUMBER	FOR CITY OF HOUSTON USE ONLY
R-000267-0180-3	
DRAWING SCALE	
AS NOTED	
CITY OF HOUSTON PM	
BRENDA JOHNSON P.E.	
SHEET NO. XX OF XX	

WR-I-10

FILE PATH: O:\H8107_Lift Station Rehabilitation And Reconstruction (Pape Dawson)\6 Drawings\Instrumentation And Control\Working\Woodland Ridge\H8107_WR-I-11.dwg

FIELD	POWER PANEL	CONTROL PANEL	
		DOOR	INTERIOR PANEL

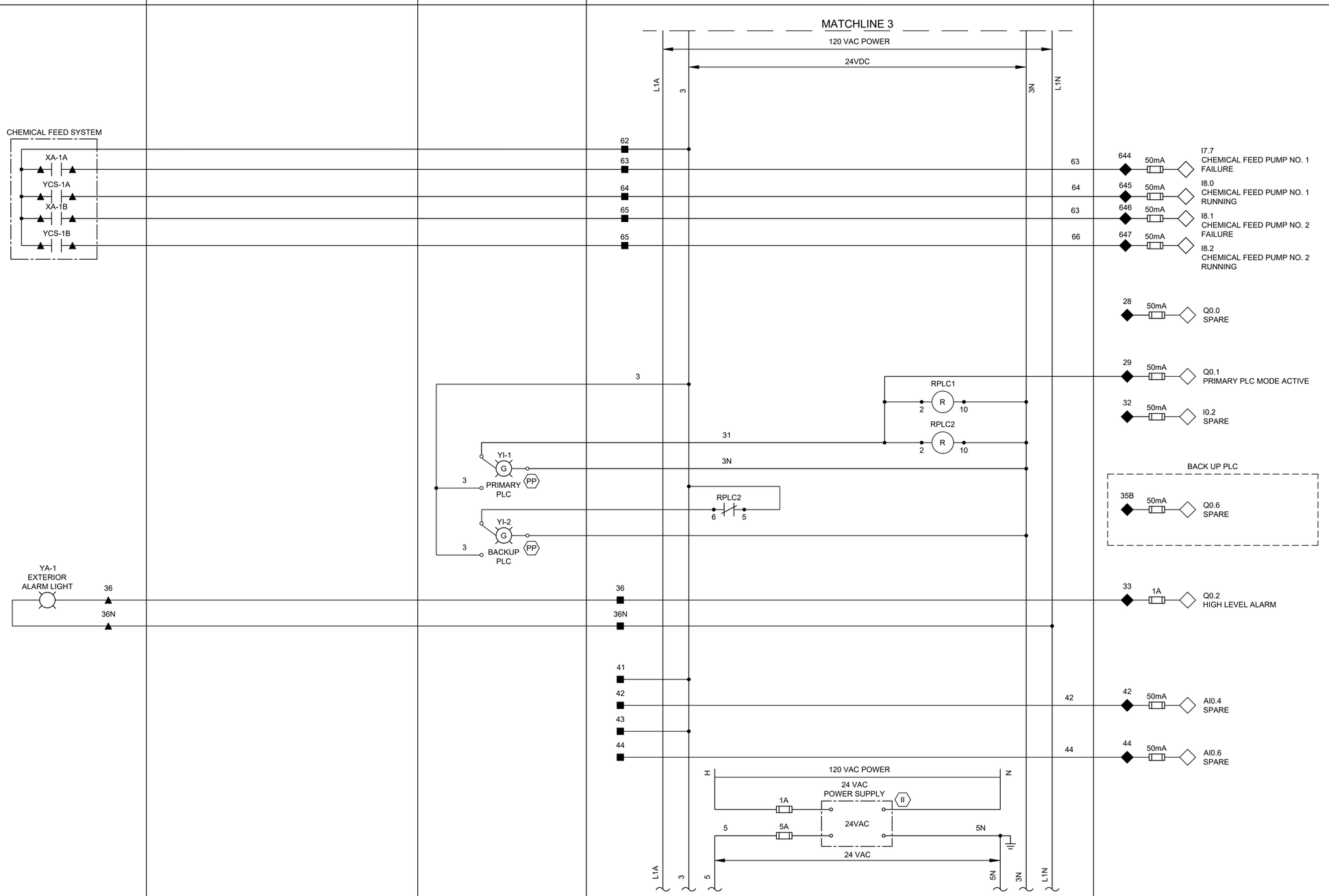

LEGEND

- △ DEVICE OR FIELD TERMINAL LOCATED AT MOTOR
- ✳ DEVICE OR FIELD TERMINAL LOCATED REMOTE
- □ DEVICE OR FIELD TERMINAL LOCATED AT MCC/POWER PANEL
- ■ FIELD TERMINAL LOCATED AT CONTROL PANEL
- ▲ REMOTE TERMINAL
- ● DEVICE TERMINAL NO.
- ◆ PLC INTERFACE TERMINAL

NO.	DATE	REVISION	APP.

NOTICE:
FOR YOUR SAFETY, YOU ARE REQUIRED BY TEXAS LAW TO CALL 811 AT LEAST 48 HOURS BEFORE YOU DIG SO THAT UNDERGROUND LINES CAN BE MARKED. THIS SIGNATURE DOES NOT FULFILL YOUR OBLIGATION TO CALL 811

VERIFICATION OF PRIVATE UTILITY LINES

Date

CenterPoint Energy natural gas utilities shown. (Gas service lines are not shown). This signature not be used for conflict verification.

Signature valid for six months.

Date

CenterPoint Energy/UNDERGROUND Electrical Facilities Verification ONLY. (This signature verifies existing underground facilities – not to be used for conflict verification)

Signature valid for six months.

Date

Approved for AT&T underground conduit facilities only.
Signature valid for one year.

PAPE–DAWSON
2107 CITYWEST BLVD, 3RD FLR I HOUSTON, TX 77042 I 713.428.2400
TEXAS ENGINEERING FIRM #470 I TEXAS SURVEYING FIRM #10028800

GAI
Gupta & Associates, Inc.
CONSULTING ENGINEERING
Registration No. F-2593
302 Dennis St.
Houston, Texas 77006
Tel: 713-636-2936
Fax: 713-636-2987
email: hforouzan@gaiconsulting.com

SURVEYED BY:
PAPE–DAWSON ENGINEERS
FB NO. 24–018

THIS DOCUMENT IS RELEASED FOR INTERIM REVIEW UNDER THE AUTHORIZATION OF HOSS FOROUZAN, P.E. (#77748) AND IS **NOT TO BE USED FOR CONSTRUCTION.**

CITY OF HOUSTON
HOUSTON PUBLIC WORKS

LIFT STATION REHABILITATION AND RECONSTRUCTION
BEN'S BRANCH, WOODLAND RIDGE, ELMWOOD HILLS, FOREST SHORES, TRAIL RIVER, RIVERLAWN

INSTRUMENTATION

WOODLAND RIDGE LIFT STATION CONTROL PANEL CONTROL WIRING DIAGRAM–IV

WBS NUMBER	FOR CITY OF HOUSTON USE ONLY
R–000267–0180–3	
DRAWING SCALE	
AS NOTED	
CITY OF HOUSTON PM	
BRENDA JOHNSON P.E.	
SHEET NO. XX OF XX	

WR–I–11

FILE PATH: O:\H8107_Lift Station Rehabilitation And Reconstruction (Pape Dawson)\6 Drawings\Instrumentation And Control\Working\Woodland Ridge\H8107_WR-I-12.dwg

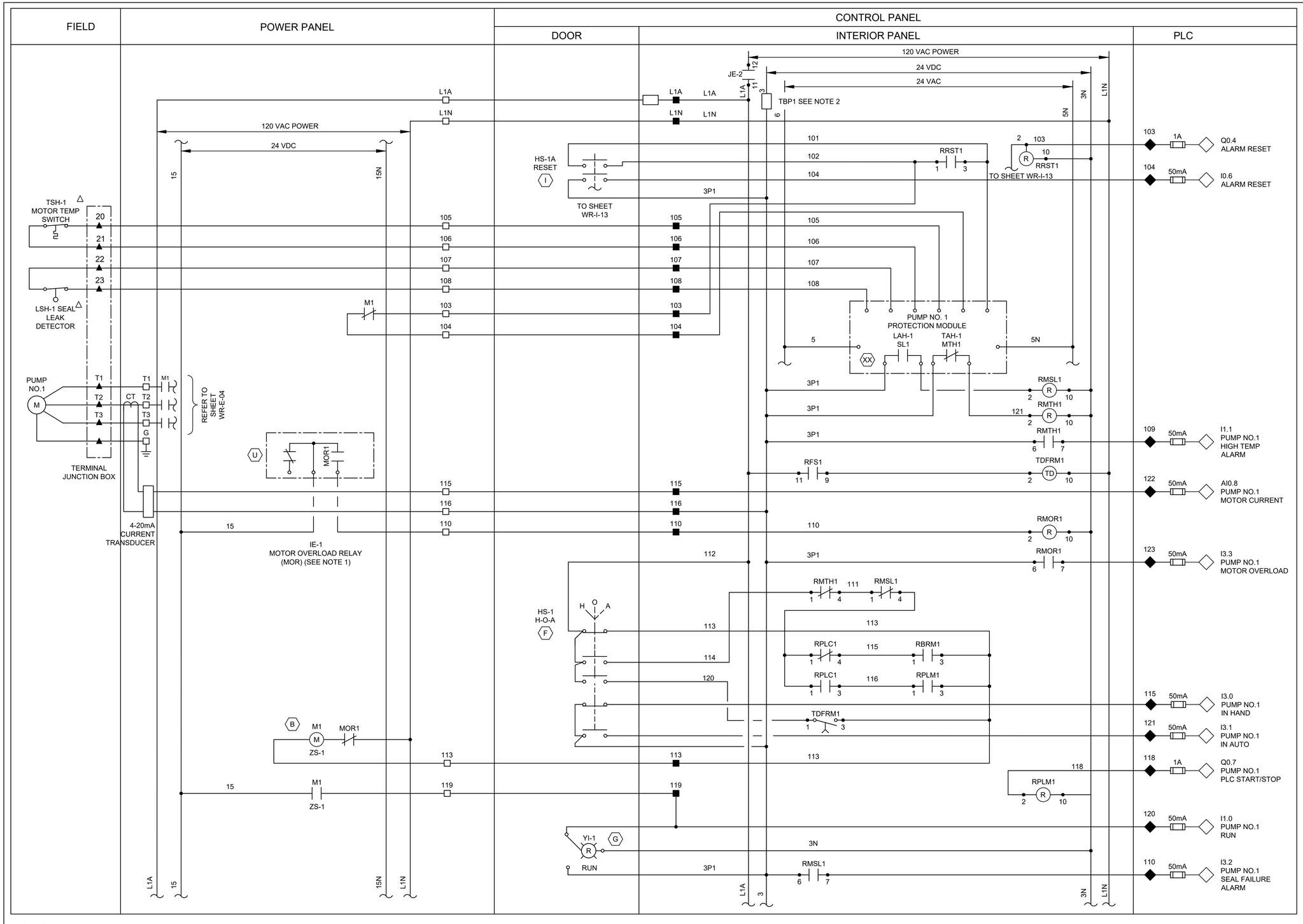

LEGEND

- △ DEVICE OR FIELD TERMINAL LOCATED AT MOTOR
- ✳ DEVICE OR FIELD TERMINAL LOCATED REMOTE
- □ DEVICE OR FIELD TERMINAL LOCATED AT MCC/POWER PANEL
- ■ FIELD TERMINAL LOCATED AT CONTROL PANEL
- ▲ REMOTE TERMINAL
- ● DEVICE TERMINAL NO.
- ◆ PLC INTERFACE TERMINAL

NO.	DATE	REVISION	APP.

NOTES:

1. MOTOR OVERLOAD RELAY OUTPUT CONTACT SHOWN IS NORMALLY CLOSED WHEN RELAY IS DE-ENERGIZED, OPEN WHEN ENERGIZED, AND CLOSED WHEN IN ALARM. VERIFY OPERATION OF RELAY PROVIDED AND ADJUST CONNECTION OF RMOR AUXILIARY RELAYS.
2. FUSED TERMINAL ON TERMINAL BLOCK TB4 SEE CONTROL POWER AND COMMUNICATION WIRING DIAGRAM DRAWING NO. WR-I-03.
3. ALL FLOAT CONTROL CIRCUIT WIRES COLOR SHALL BE YELLOW.

NOTICE:
FOR YOUR SAFETY, YOU ARE REQUIRED BY TEXAS LAW TO CALL 811 AT LEAST 48 HOURS BEFORE YOU DIG SO THAT UNDERGROUND LINES CAN BE MARKED. THIS SIGNATURE DOES NOT FULFILL YOUR OBLIGATION TO CALL 811

VERIFICATION OF PRIVATE UTILITY LINES

Date

CenterPoint Energy natural gas utilities shown. (Gas service lines are not shown). This signature not be used for conflict verification.

Signature valid for six months.

Date

CenterPoint Energy/UNDERGROUND Electrical Facilities Verification ONLY. (This signature verifies existing underground facilities – not to be used for conflict verification)

Signature valid for six months.

Date

Approved for AT&T underground conduit facilities only.
Signature valid for one year.

PAPE–DAWSON
2107 CITYWEST BLVD, 3RD FLR I HOUSTON, TX 77042 I 713.428.2400
TEXAS ENGINEERING FIRM #470 I TEXAS SURVEYING FIRM #10028800

GAI
Gupta & Associates, Inc.
CONSULTING ENGINEERING
Registration No. F-2593
302 Dennis St.
Houston, Texas 77006
Tel: 713-636-2936
Fax: 713-636-2987
email: hforouzan@gaiconsulting.com

SURVEYED BY:
PAPE–DAWSON ENGINEERS
FB NO. 24–018

THIS DOCUMENT IS RELEASED FOR INTERIM REVIEW UNDER THE AUTHORIZATION OF HOSS FOROUZAN, P.E. (#77748) AND IS **NOT TO BE USED FOR CONSTRUCTION.**

CITY OF HOUSTON
HOUSTON PUBLIC WORKS

LIFT STATION REHABILITATION AND RECONSTRUCTION
BEN'S BRANCH, WOODLAND RIDGE, ELMWOOD HILLS, FOREST SHORES, TRAIL RIVER, RIVERLAWN

INSTRUMENTATION

WOODLAND RIDGE LIFT STATION PUMP NO.1 CONTROL WIRING DIAGRAM

WBS NUMBER	FOR CITY OF HOUSTON USE ONLY
R–000267–0180–3	
DRAWING SCALE	
AS NOTED	
CITY OF HOUSTON PM	
BRENDA JOHNSON P.E.	
SHEET NO. XX OF XX	

WR–I–12

FILE PATH: O:\H8107_Lift Station Rehabilitation And Reconstruction (Pape Dawson)\6 Drawings\Instrumentation And Control\Working\Woodland Ridge\H8107_WR-I-13.dwg

FIELD | POWER PANEL | CONTROL PANEL: DOOR | CONTROL PANEL: INTERIOR PANEL | PLC

120 VAC POWER
24 VDC
24 VAC
15
15N
L1A
3
7
TBP2 SEE NOTE 2
3N
5N
L1N

FROM SHEET WR-I-12
HS-1A RESET (I)
201
202
RRST2 (1, 3)
FROM SHEET WR-I-12
2
R
10
RRST2

M2
203
204
205
206
207
208
200

TSH-2 MOTOR TEMP SWITCH △
20
21
22
23
LSH-2 SEAL△ LEAK DETECTOR

PUMP NO. 2 PROTECTION MODULE
5
LAH-2 SL2
TAH-2 MTH2
XX
5N

PUMP NO.2
M
T1
T2
T3
G
CT
M1
REFER TO SHEET WR-E-04
TERMINAL JUNCTION BOX

3P2
RMSL2 (R, 2, 10)
RMTH2 (R, 2, 10)
221
RMTH2 (6, 7)
RFS2 (1, 3)
TDFRM2 (TD, 2, 10)

U
MOR2

209 50mA I1.3 PUMP NO.2 HIGH TEMP ALARM
222 50mA AI.0 PUMP NO.2 MOTOR CURRENT

215
216
210
4-20mA CURRENT TRANSDUCER
15
IE-2 MOTOR OVERLOAD RELAY (MOR) (SEE NOTE 1)

RMOR2 (R, 2, 10)
RMOR2 (6, 7)
223 50mA I3.7 PUMP NO.2 MOTOR OVERLOAD ALARM

212
RMTH2 (1, 4)
211
RMSL2 (1, 4)
HS-2 H-O-A (F)
H O A
213
214
220
RPLC1 (6, 5)
215
RBRM2 (1, 3)
RPLC1 (6, 7)
216
RPLM2 (1, 3)
TDFRM2 (1, 3)
RFLP (1, 4)

210 50mA I3.5 PUMP NO.2 IN HAND
211 50mA I3.4 PUMP NO.2 IN AUTO

B
M2
MOR2
ZS-2
213
218
RPLM2 (R, 2, 10)
218 1A Q1.0 PUMP NO.2 PLC START/STOP

15
M2
ZS-2
219
YI-2 (G, R)
RUN
3N
3P2
RMSL2 (6, 7)
220 50mA I1.2 PUMP NO.2 RUN
210 50mA I3.6 PUMP NO.2 SEAL FAILURE ALARM

LEGEND

△ DEVICE OR FIELD TERMINAL LOCATED AT MOTOR
✳ DEVICE OR FIELD TERMINAL LOCATED REMOTE
□ DEVICE OR FIELD TERMINAL LOCATED AT MCC/POWER PANEL
■ FIELD TERMINAL LOCATED AT CONTROL PANEL
▲ REMOTE TERMINAL
● DEVICE TERMINAL NO.
◆ PLC INTERFACE TERMINAL

NO.	DATE	REVISION	APP.

NOTES:

1. MOTOR OVERLOAD RELAY OUTPUT CONTACT SHOWN IS NORMALLY CLOSED WHEN RELAY IS DE-ENERGIZED, OPEN WHEN ENERGIZED, AND CLOSED WHEN IN ALARM. VERIFY OPERATION OF RELAY PROVIDED AND ADJUST CONNECTION OF RMOR AUXILIARY RELAYS.
2. FUSED TERMINAL ON TERMINAL BLOCK TB4 SEE CONTROL POWER AND COMMUNICATION WIRING DIAGRAM DRAWING NO. WR-I-03.
3. ALL FLOAT CONTROL CIRCUIT WIRES COLOR SHALL BE YELLOW.

NOTICE:
FOR YOUR SAFETY, YOU ARE REQUIRED BY TEXAS LAW TO CALL 811 AT LEAST 48 HOURS BEFORE YOU DIG SO THAT UNDERGROUND LINES CAN BE MARKED. THIS SIGNATURE DOES NOT FULFILL YOUR OBLIGATION TO CALL 811

VERIFICATION OF PRIVATE UTILITY LINES

Date

CenterPoint Energy natural gas utilities shown. (Gas service lines are not shown). This signature not be used for conflict verification.

Signature valid for six months.

Date

CenterPoint Energy/UNDERGROUND Electrical Facilities Verification ONLY. (This signature verifies existing underground facilities – not to be used for conflict verification)

Signature valid for six months.

Date

Approved for AT&T underground conduit facilities only.
Signature valid for one year.

PAPE–DAWSON
2107 CITYWEST BLVD, 3RD FLR I HOUSTON, TX 77042 I 713.428.2400
TEXAS ENGINEERING FIRM #470 I TEXAS SURVEYING FIRM #10028800

GAI
Gupta & Associates, Inc.
CONSULTING ENGINEERING
Registration No. F-2593
302 Dennis St.
Houston, Texas 77006
Tel: 713-636-2935
Fax: 713-636-2987
email: hforouzan@gaiconsulting.com

SURVEYED BY:
PAPE–DAWSON ENGINEERS
FB NO. 24–018

THIS DOCUMENT IS RELEASED FOR INTERIM REVIEW UNDER THE AUTHORIZATION OF HOSS FOROUZAN, P.E. (#77746) AND IS **NOT TO BE USED FOR CONSTRUCTION.**

CITY OF HOUSTON
HOUSTON PUBLIC WORKS

LIFT STATION REHABILITATION AND RECONSTRUCTION
BEN'S BRANCH, WOODLAND RIDGE, ELMWOOD HILLS, FOREST SHORES, TRAIL RIVER, RIVERLAWN

INSTRUMENTATION

WOODLAND RIDGE LIFT STATION PUMP NO.2 CONTROL WIRING DIAGRAM

WBS NUMBER	FOR CITY OF HOUSTON USE ONLY
R–000267–0180–3	
DRAWING SCALE	
AS NOTED	
CITY OF HOUSTON PM	
BRENDA JOHNSON P.E.	
SHEET NO. XX OF XX	

WR–I–13

SUMMARY TABLE	
LIFT STATION NAME	BEN'S BRANCH
LIFT STATION NUMBER	503
ADDRESS	2423 WEST LAKE HOUSTON PARKWAY
KEY MAP	337F

FLOODPLAIN TABLE	
FREQUENCY	WATER SURFACE ELEVATION, FT
500-YR	55.0'
100-YR	50.6'
HARVEY	59.1'

NOTE:

1. THIS SITE PLAN WAS DEVELOPED FROM ORIGINAL CONSTRUCTION DRAWINGS, RECENT TOPOGRAPHICAL SURVEY, AND FIELD OBSERVATIONS. SOME BURIED ITTEMS MAY EXIST ELSEWHERE, THEREFORE THE CONTRACTOR MUST FIELD VERIFY ALL UTILITIES AND STRUCTURE PRIOR TO CONSTRUCTION. SUBSURFACE ELECTRICAL ITEMS ARE SHOWN ON THE ELECTRICAL SITE PLAN
2. SEE PROPERTY BOUNDARY COORDINATES SHEET BB-C-03
3. CONTRACTOR TO REESTABLISH TBMS PRIOR TO DEMOLITION FOR ELEVATION CONTROL
4. SEE SHEET __ FOR EXISTING ELECTRICAL.

TEMPORARY BENCHMARK DESCRIPTION

TBM-530 CUT "X" IN TYPE "E" INLET – ELEVATION 49.87'
TBM-531 CUT "X" IN LIFT STATION DECK – ELEVATION 52.22'

LEGEND

- DRAINAGE DIRECTION
- FLOW DIRECTION
- EXISTING PAVEMENT
- EXISTING GRASS AREA

SCALE: 1"= 10'

0' 10' 20' 30'

NO.	DATE	REVISION	APP.

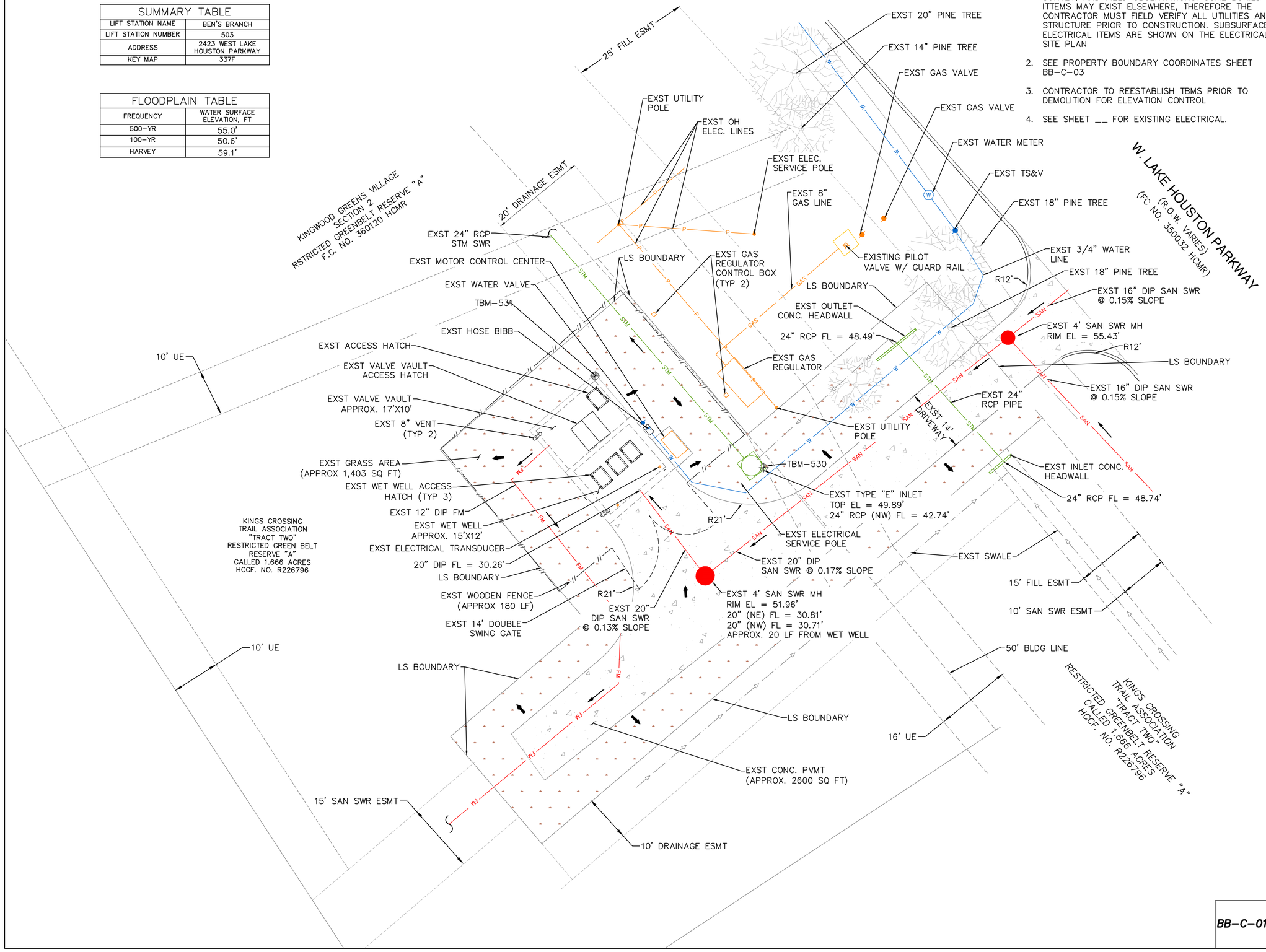

NOTICE:

FOR YOUR SAFETY, YOU ARE REQUIRED BY TEXAS LAW TO CALL 811 AT LEAST 48 HOURS BEFORE YOU DIG SO THAT UNDERGROUND LINES CAN BE MARKED. THIS SIGNATURE DOES NOT FULFILL YOUR OBLIGATION TO CALL 811

VERIFICATION OF PRIVATE UTILITY LINES

Date

CenterPoint Energy natural gas utilities shown. (Gas service lines are not shown). This signature not be used for conflict verification.

Signature valid for six months.

Date

CenterPoint Energy/UNDERGROUND Electrical Facilities Verification ONLY. (This signature verifies existing underground facilities – not to be used for conflict verification)

Signature valid for six months.

Date

Approved for AT&T underground conduit facilities only.
Signature valid for one year.

PAPE-DAWSON

2107 CITYWEST BLVD, 3RD FLR I HOUSTON, TX 77042 I 713.428.2400

TEXAS ENGINEERING FIRM #470 I TEXAS SURVEYING FIRM #10028800

PAPE-DAWSON
2107 CITYWEST BOULEVARD
3RD FLR
HOUSTON, TEXAS 77402
713-428-2400
TX FIRM #470

SURVEYED BY:
PAPE-DAWSON
FB NO. 24-018

THIS DOCUMENT IS RELEASED FOR INTERIM REVIEW UNDER THE AUTHORIZATION OF AMIRHOSSEIN SHOKOUHI, P.E. (#139835) AND IS **NOT TO BE USED FOR CONSTRUCTION.**

CITY OF HOUSTON

HOUSTON PUBLIC WORKS

LIFT STATION REHABILITATION AND RECONSTRUCTION
BEN'S BRANCH, WOODLAND RIDGE, ELMWOOD HILLS, FOREST SHORES, TRAIL RIVER, RIVERLAWN

CIVIL

BEN'S BRANCH LIFT STATION EXISTING SITE PLAN & YARD PIPING

WBS NUMBER	FOR CITY OF HOUSTON USE ONLY
R-000267-0180-3	
DRAWING SCALE	
AS NOTED	
CITY OF HOUSTON PM	
BRENDA JOHNSON P.E.	
SHEET NO. 100 OF 338	

BB-C-01

FILE PATH: K:\Projects\423\77 COH LS Package\00\03 CADD\Plans\Sheets\04 Bens Branch\Existing Yard Piping Plan.dwg

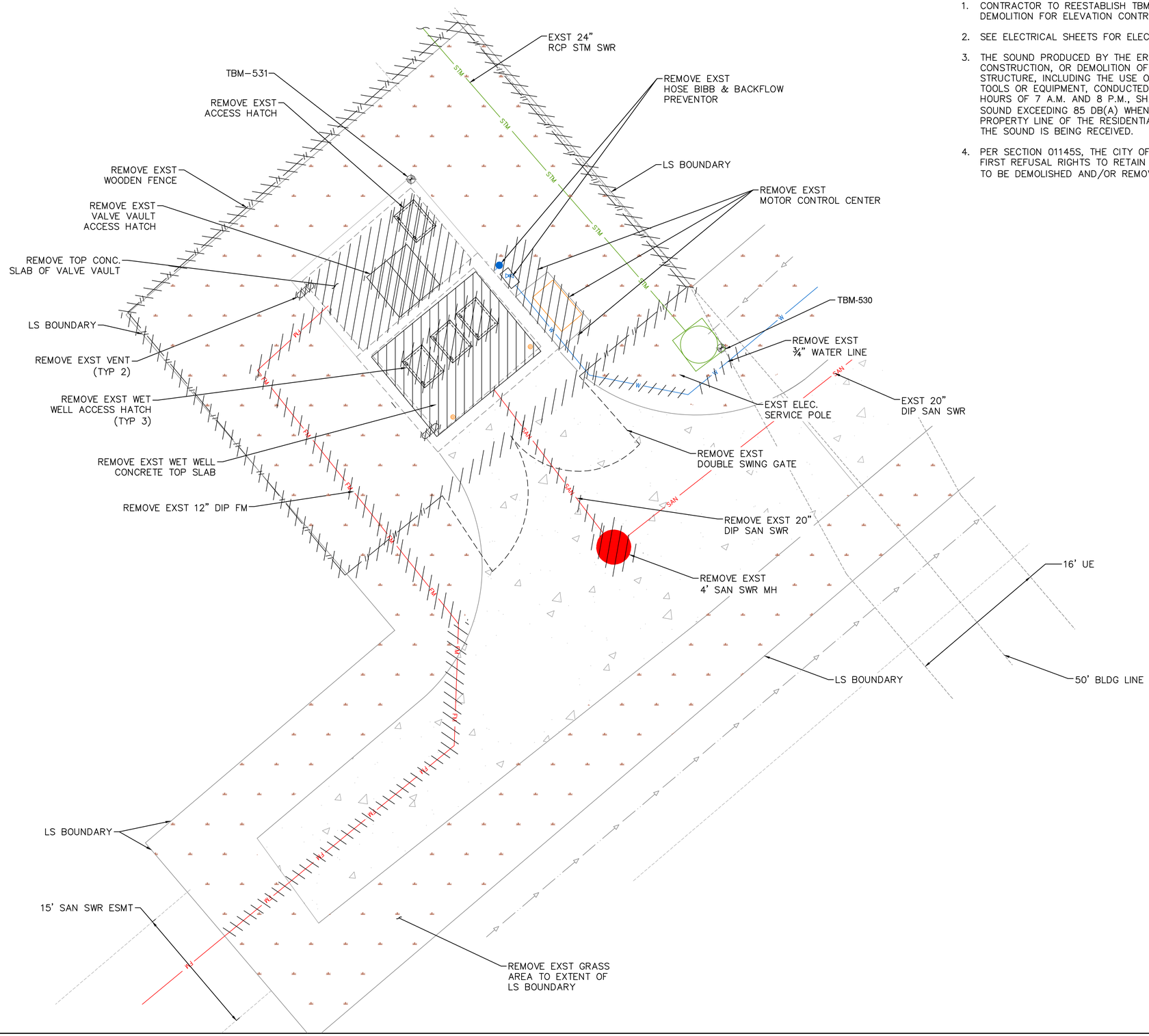

NOTE:

1. CONTRACTOR TO REESTABLISH TBM PRIOR TO DEMOLITION FOR ELEVATION CONTROL.
2. SEE ELECTRICAL SHEETS FOR ELECTRICAL DEMOLITION.
3. THE SOUND PRODUCED BY THE ERECTION, EXCAVATION, CONSTRUCTION, OR DEMOLITION OF ANY BUILDING OR STRUCTURE, INCLUDING THE USE OF ANY NECESSARY TOOLS OR EQUIPMENT, CONDUCTED BETWEEN THE HOURS OF 7 A.M. AND 8 P.M., SHALL NOT PRODUCE A SOUND EXCEEDING 85 DB(A) WHEN MEASURED FROM PROPERTY LINE OF THE RESIDENTIAL PROPERTY WHERE THE SOUND IS BEING RECEIVED.
4. PER SECTION 01145S, THE CITY OF HOUSTON TO HAVE FIRST REFUSAL RIGHTS TO RETAIN ALL ITEMS SHOWN TO BE DEMOLISHED AND/OR REMOVED.

TEMPORARY BENCHMARK DESCRIPTION

TBM-530 CUT "X" IN TYPE "E" INLET – ELEVATION 49.87'
TBM-531 CUT "X" IN LIFT STATION DECK – ELEVATION 52.22'

LEGEND

TO BE REMOVED

NO.	DATE	REVISION	APP.

SCALE: 1" = 6'

0' 6' 12' 18'

NOTICE:

FOR YOUR SAFETY, YOU ARE REQUIRED BY TEXAS LAW TO CALL 811 AT LEAST 48 HOURS BEFORE YOU DIG SO THAT UNDERGROUND LINES CAN BE MARKED. THIS SIGNATURE DOES NOT FULFILL YOUR OBLIGATION TO CALL 811

VERIFICATION OF PRIVATE UTILITY LINES

Date

CenterPoint Energy natural gas utilities shown. (Gas service lines are not shown). This signature not be used for conflict verification.

Signature valid for six months.

Date

CenterPoint Energy/UNDERGROUND Electrical Facilities Verification ONLY. (This signature verifies existing underground facilities – not to be used for conflict verification)

Signature valid for six months.

Date

Approved for AT&T underground conduit facilities only.
Signature valid for one year.

PAPE-DAWSON

2107 CITYWEST BLVD, 3RD FLR I HOUSTON, TX 77042 I 713.428.2400

TEXAS ENGINEERING FIRM #470 I TEXAS SURVEYING FIRM #10028800

PAPE-DAWSON
2107 CITYWEST BOULEVARD
3RD FLR
HOUSTON, TEXAS 77402
713-428-2400
TX FIRM #470

SURVEYED BY:
PAPE-DAWSON
FB NO. 24-018

THIS DOCUMENT IS RELEASED FOR INTERIM REVIEW UNDER THE AUTHORIZATION OF AMIRHOSSEIN SHOKOUHI, P.E. (#139835) AND IS **NOT TO BE USED FOR CONSTRUCTION.**

CITY OF HOUSTON

HOUSTON PUBLIC WORKS

LIFT STATION REHABILITATION AND RECONSTRUCTION
BEN'S BRANCH, WOODLAND RIDGE, ELMWOOD HILLS, FOREST SHORES, TRAIL RIVER, RIVERLAWN

CIVIL

BEN'S BRANCH LIFT STATION DEMOLITION – PLAN

WBS NUMBER	FOR CITY OF HOUSTON USE ONLY
R-000267-0180-3	
DRAWING SCALE	
AS NOTED	
CITY OF HOUSTON PM	
BRENDA JOHNSON P.E.	
SHEET NO. 101 OF 338	

BB-C-02

FILE PATH: K:\Projects\423\77 COH LS Package\00\03 CADD\Plans\Sheets\04 Bens Branch\BB PROP DEMO-C-4237700.dwg

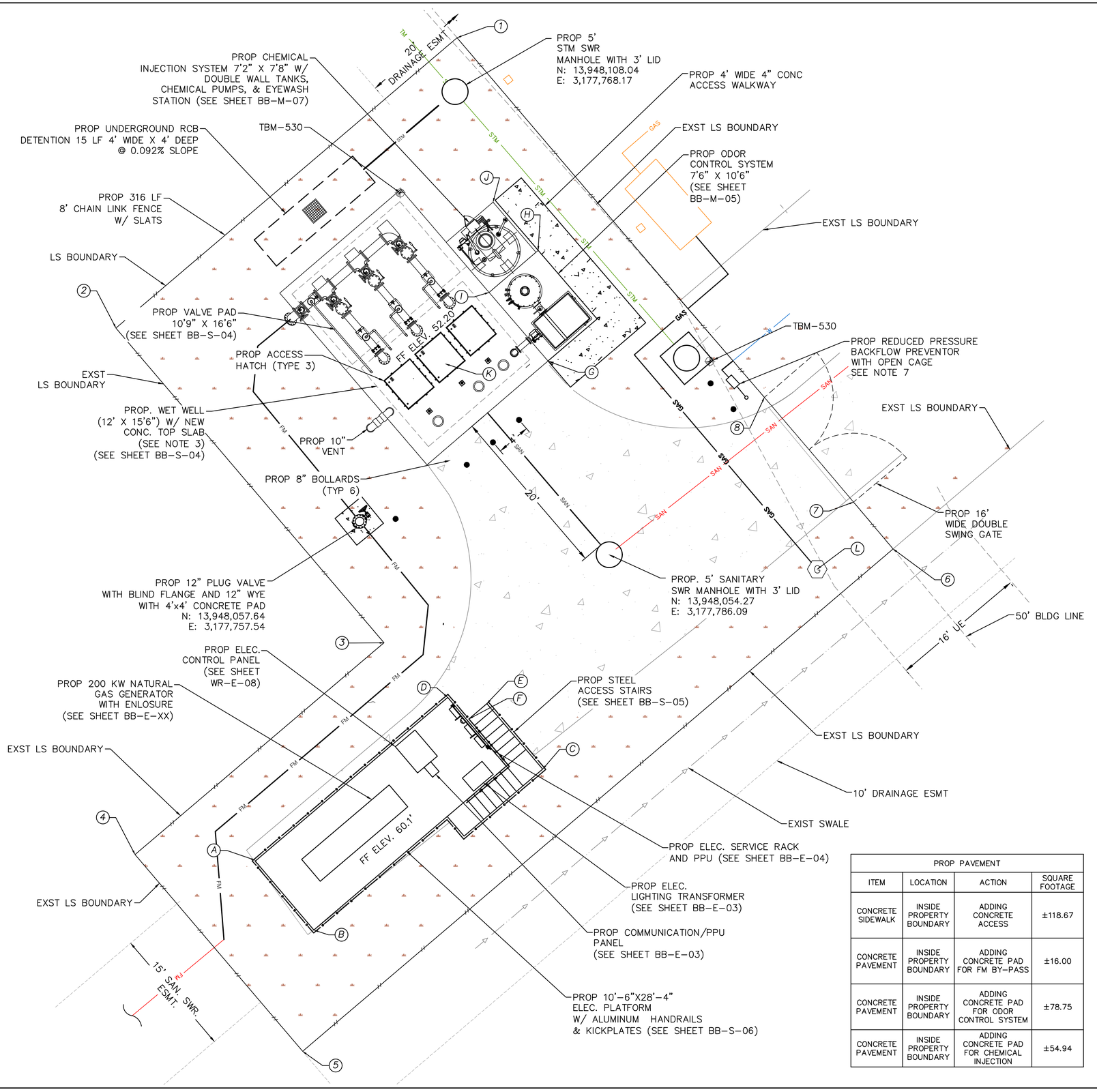

PROP PAVEMENT			
ITEM	LOCATION	ACTION	SQUARE FOOTAGE
CONCRETE SIDEWALK	INSIDE PROPERTY BOUNDARY	ADDING CONCRETE ACCESS	±118.67
CONCRETE PAVEMENT	INSIDE PROPERTY BOUNDARY	ADDING CONCRETE PAD FOR FM BY-PASS	±16.00
CONCRETE PAVEMENT	INSIDE PROPERTY BOUNDARY	ADDING CONCRETE PAD FOR ODOR CONTROL SYSTEM	±78.75
CONCRETE PAVEMENT	INSIDE PROPERTY BOUNDARY	ADDING CONCRETE PAD FOR CHEMICAL INJECTION	±54.94

PROPERTY COORDINATION				
POINT #	PROPOSED ELEVATIONS	EXIST ELEVATION	NORTHING	EASTING
1	50.13	50.13	13948114.31	3177768.43
2	49.77	49.77	13948080.60	3177728.83
3	50.51	50.51	13948044.06	3177759.95
4	51.55	51.55	13948019.47	3177731.06
5	51.63	51.63	13947996.62	3177750.50
6	53.12	53.12	13948054.95	3177819.04
7	53.12	53.12	13948060.39	3177814.45
8	51.92	51.92	13948072.55	3177804.09

STRUCTURE COORDINATION				
POINT #	PROPOSED ELEVATIONS	EXIST ELEVATION	NORTHING	EASTING
A	52.00	52.00	13948018.80	3177744.99
B	51.08	51.08	13948010.71	3177751.80
C	52.08	52.08	13948029.38	3177778.37
D	51.73	51.73	13948037.71	3177767.34
E	51.85	51.85	13948036.99	3177771.89
F	51.85	51.85	13948035.21	3177769.80
G	51.50	51.50	13948076.77	3177778.98
H	50.00	50.00	13948089.62	3177777.84
I	51.03	51.03	13948084.74	3177772.15
J	50.11	50.11	13948095.22	3177772.60
K	52.20	52.20	13948076.44	3177767.08
L	52.79	52.79	13948052.59	3177810.23

NOTE:

1. THE ELEVATED ELECTRICAL/GENERATOR PLATFORM TO BE INSTALLED AT ELEVATION OF 60.1' (9.1 FT HIGHER THAN FINISH GROUND ELEVATION OF 51.0')
2. CONTRACTOR SHALL BE RESPONSIBLE FOR REPAIRING AND REPAVING ANY PORTION OF CONCRETE ACCESS ROAD AND PAVING.
3. WET WELL TOP SLAB TO BE REPLACED TO ACCOMMODATE NEW OPENING AND FLOOD TIGHT ACCESS HATCHES.
4. THE EXST VALVE VAULT TO BE FILLED WITH GROUT AND ANBANDONED. NEW VALVE PAD TO BE INSTALLED.
5. ACCORDING TO SURVEY, THE EXST FENCE IS CONSTRUCTED SLIGHTLY OUTSIDE THE LIFT STATION BOUNDARY. THE NEW FENCE LOCATION TO BE ADJUSTED ACCORDINGLY AND INSTALLED AT THE LIFT STATION BOUNDARY
6. THE EXST WET WELL INTERIOR WALLS AND CEILING TO BE RE-COATED WITH COH WWO APPROVED MATERIAL
7. CONTRACTOR TO LOCATE THE EXST 3/4" POTABLE WATER LINE ON SITE AND CONNECT TO THE PROP BACKFLOW PREVENTOR (SEE SHEET GC-04)
8. PROP GENERATOR FOR EMERGENCY ONLY. NOISE AND SOUND REGULATION IN CODE COMPLIANCE CHAPTER 30 NOT APPLICABLE
9. PROP 5' SAN SWR MANHOLE RIM ELEVATION AT GRADE. ALL OTHER PROP MANHOLE RIMS ELEVATION 6" HIGHER THAN GROUND ELEVATION. ALL LIDS TO BE FLOOD-TIGHT.
10. SUBSURFACE DRAINAGE SYSTEMS ARE REQUIRED TO BE DRAINED IN 48 HOURS.
11. PROP UNDERGROUND DETENTION BOX TO BE MAINTAINED BY CITY OF HOUSTON WASTEWATER OPERATIONS.

TEMPORARY BENCHMARK DESCRIPTION

TBM-530 CUT "X" IN TYPE "E" INLET – ELEVATION 49.87'
TBM-531 CUT "X" IN LIFT STATION DECK – ELEVATION 52.22'

LEGEND

PROPOSED PAVEMENT

SCALE: 1"= 6'

0' 6' 12' 18'

NOTICE:

FOR YOUR SAFETY, YOU ARE REQUIRED BY TEXAS LAW TO CALL 811 AT LEAST 48 HOURS BEFORE YOU DIG SO THAT UNDERGROUND LINES CAN BE MARKED. THIS SIGNATURE DOES NOT FULFILL YOUR OBLIGATION TO CALL 811

VERIFICATION OF PRIVATE UTILITY LINES

Date

CenterPoint Energy natural gas utilities shown. (Gas service lines are not shown). This signature not be used for conflict verification.

Signature valid for six months.

Date

CenterPoint Energy/UNDERGROUND Electrical Facilities Verification ONLY. (This signature verifies existing underground facilities – not to be used for conflict verification)

Signature valid for six months.

Date

Approved for AT&T underground conduit facilities only. Signature valid for one year.

PAPE-DAWSON

2107 CITYWEST BLVD, 3RD FLR I HOUSTON, TX 77042 I 713.428.2400

TEXAS ENGINEERING FIRM #470 I TEXAS SURVEYING FIRM #10028800

PAPE-DAWSON
2107 CITYWEST BOULEVARD 3RD FLR
HOUSTON, TEXAS 77402
713-428-2400
TX FIRM #470

SURVEYED BY:
PAPE-DAWSON
FB NO. 24-018

THIS DOCUMENT IS RELEASED FOR INTERIM REVIEW UNDER THE AUTHORIZATION OF AMIRHOSSEIN SHOKOUHI, P.E. (#139835) AND IS **NOT TO BE USED FOR CONSTRUCTION.**

CITY OF HOUSTON

HOUSTON PUBLIC WORKS

LIFT STATION REHABILITATION AND RECONSTRUCTION
BEN'S BRANCH, WOODLAND RIDGE, ELMWOOD HILLS, FOREST SHORES, TRAIL RIVER, RIVERLAWN

CIVIL

BENS BRANCH LIFT STATION PROPOSED SITE PLAN

WBS NUMBER	FOR CITY OF HOUSTON USE ONLY
R-000267-0180-3	
DRAWING SCALE	
AS NOTED	
CITY OF HOUSTON PM	
BRENDA JOHNSON P.E.	
SHEET NO. 102 OF 338	

BB-C-03

NO.	DATE	REVISION	APP.

FILE PATH: K:\Projects\423\77 COH LS Package\00\03 CADD\Plans\Sheets\04 Bens Branch\LAYOUT-C-4237700.dwg

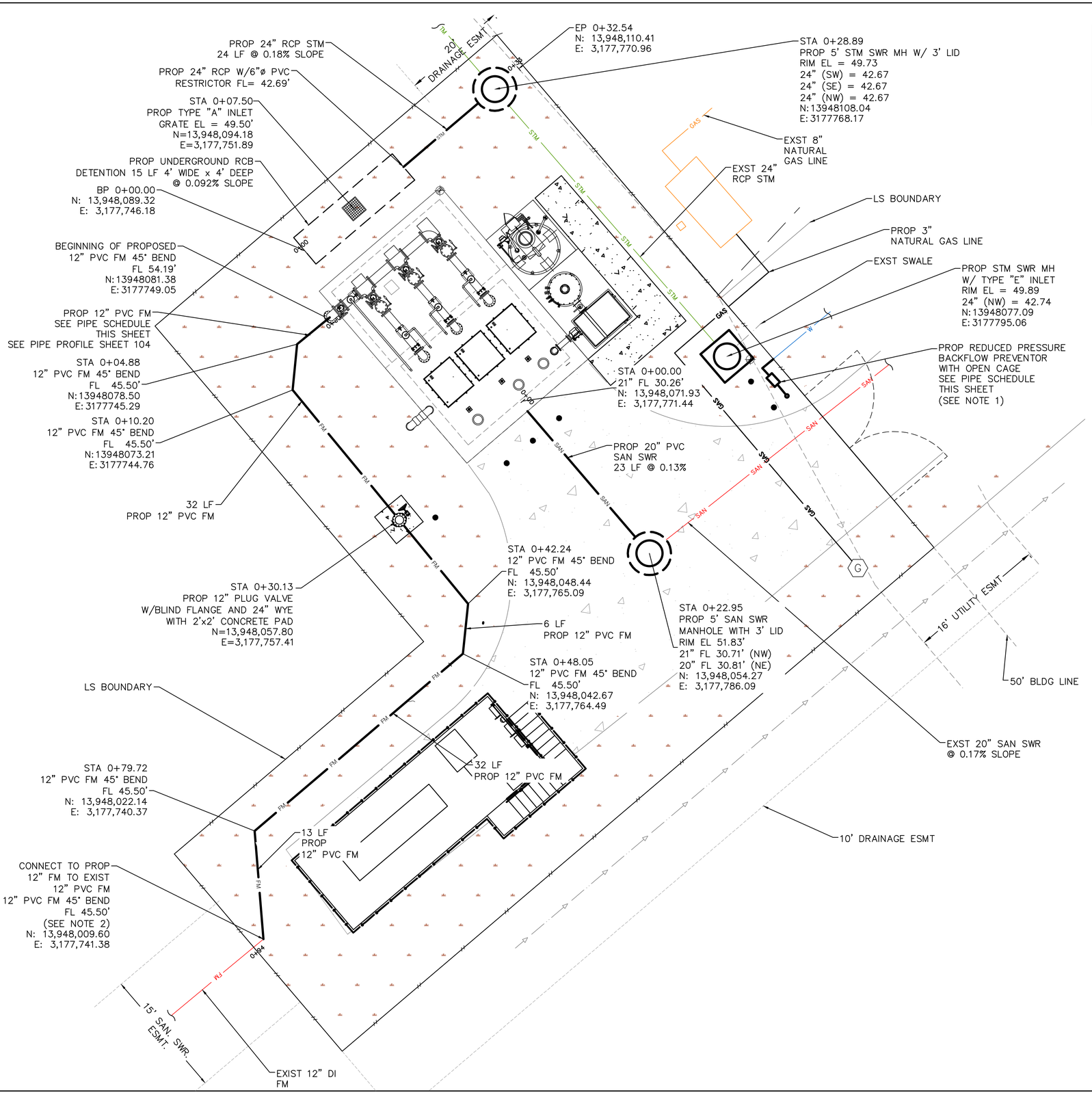

PROP WATER LINE PIPE SCHEDULE		
SIZE	MATERIAL	FITTING
3/4 INCH	SCH 40 G.S.	STRAIGHT PIPE
3/4 INCH	SCH 40 G.S.	BACKFLOW PREVENTER
3/4 INCH	SCH 40 G.S.	STRAIGHT PIPE
3/4 INCH	SCH 40 G.S.	HOSE BIBB

TEMPORARY BENCHMARK DESCRIPTION

TBM–530 CUT "X" IN TYPE "E" INLET – ELEVATION 49.87'
TBM–531 CUT "X" IN LIFT STATION DECK – ELEVATION 52.22'

LEGEND

EXISTING PAVEMENT

EXISTING GRASS AREA

PROPOSED PAVEMENT

NOTE:

1. CONTRACTOR TO LOCATE THE EXST ¾" WATER LINE ENTRANCE TO THE SITE AND CONNECT TO THE PROP BACKFLOW PREVENTOR.
2. CONTRACTOR TO LOCATE EXST 12" PVC FM EXST TO THE SITE AT STA 92.30 AND CONNECT TO THE PROP 12" PVC FM.
3. CONTRACTOR TO LOCATE EXST 20" DI SANITARY SEWER INSIDE THE FENCE AT STA 0+22.90 AND CONNECT TO THE PROP 5' SANITARY SEWER MANHOLE.
4. CONTRACTOR TO LOCATE THE EXST 24" RCP STORM LINE INSIDE THE FENCE AT STA 0+05.00 AND CONNECT TO THE PROP STORM SEWER MANHOLE .
5. THE PROP 3" NATURAL GAS LINE TO BE INSTALLED 3' BELOW GROUND ELEVATION.

NOTICE:
FOR YOUR SAFETY, YOU ARE REQUIRED BY TEXAS LAW TO CALL 811 AT LEAST 48 HOURS BEFORE YOU DIG SO THAT UNDERGROUND LINES CAN BE MARKED. THIS SIGNATURE DOES NOT FULFILL YOUR OBLIGATION TO CALL 811

VERIFICATION OF PRIVATE UTILITY LINES

Date

CenterPoint Energy natural gas utilities shown. (Gas service lines are not shown). This signature not be used for conflict verification.

Signature valid for six months.

Date

CenterPoint Energy/UNDERGROUND Electrical Facilities Verification ONLY. (This signature verifies existing underground facilities – not to be used for conflict verification)

Signature valid for six months.

Date

Approved for AT&T underground conduit facilities only.
Signature valid for one year.

PAPE–DAWSON
2107 CITYWEST BLVD, 3RD FLR I HOUSTON, TX 77042 I 713.428.2400
TEXAS ENGINEERING FIRM #470 I TEXAS SURVEYING FIRM #10028800

PAPE–DAWSON
2107 CITYWEST BOULEVARD
3RD FLR
HOUSTON, TEXAS 77402
713–428–2400
TX FIRM #470

SURVEYED BY:
PAPE–DAWSON
FB NO. 24–018

THIS DOCUMENT IS RELEASED FOR INTERIM REVIEW UNDER THE AUTHORIZATION OF AMIRHOSSEIN SHOKOUHI, P.E. (#139835) AND IS **NOT TO BE USED FOR CONSTRUCTION.**

CITY OF HOUSTON
HOUSTON PUBLIC WORKS

LIFT STATION REHABILITATION AND RECONSTRUCTION
BEN'S BRANCH, WOODLAND RIDGE, ELMWOOD HILLS, FOREST SHORES, TRAIL RIVER, RIVERLAWN

CIVIL

BENS BRANCH LIFT STATION PROPOSED YARD PIPING PLAN

WBS NUMBER	FOR CITY OF HOUSTON USE ONLY
R–000267–0180–3	
DRAWING SCALE	
AS NOTED	
CITY OF HOUSTON PM	
BRENDA JOHNSON P.E.	
SHEET NO. 103 OF 338	

BB–C–04

APP. | REVISION | NO. | DATE

FILE PATH: K:\Projects\423\77 COH LS Package\00\03 CADD\Plans\Sheets\04 Bens Branch\BB LS PYPP–C–4237700.dwg

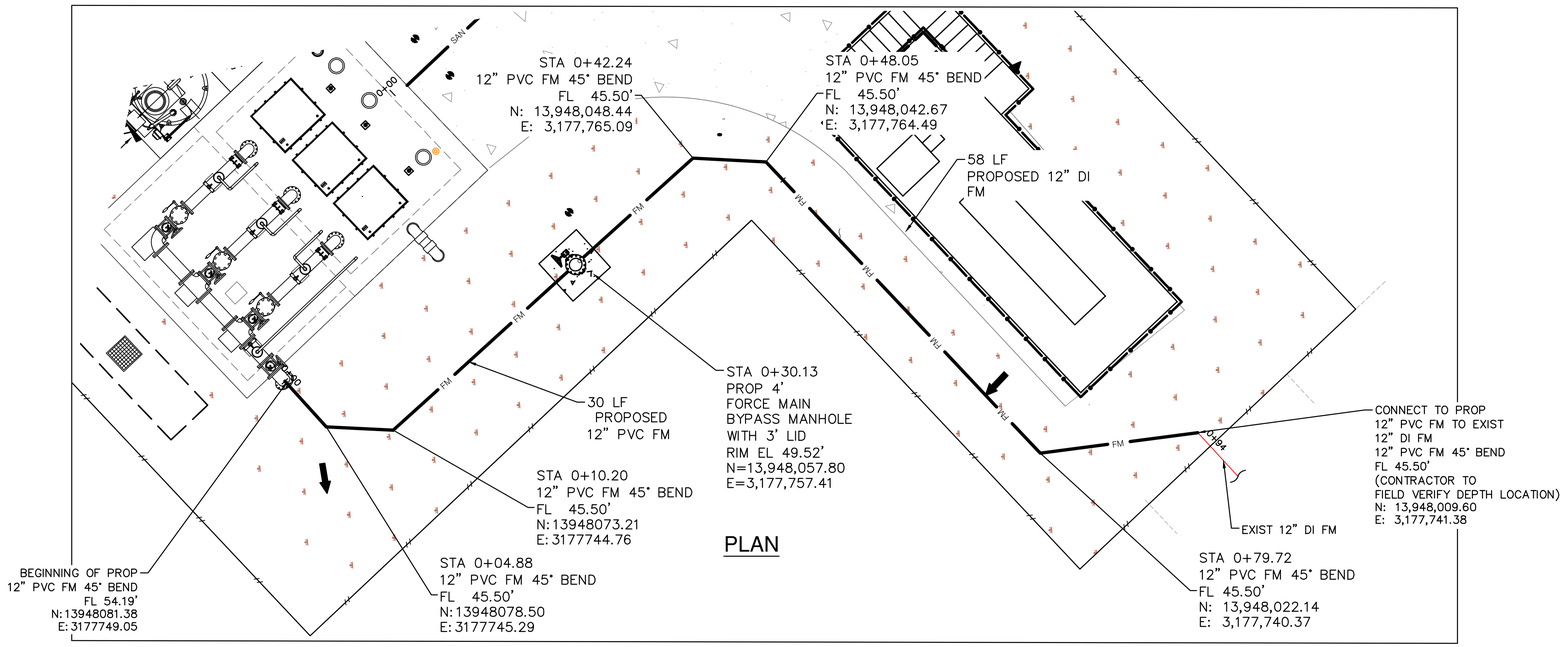

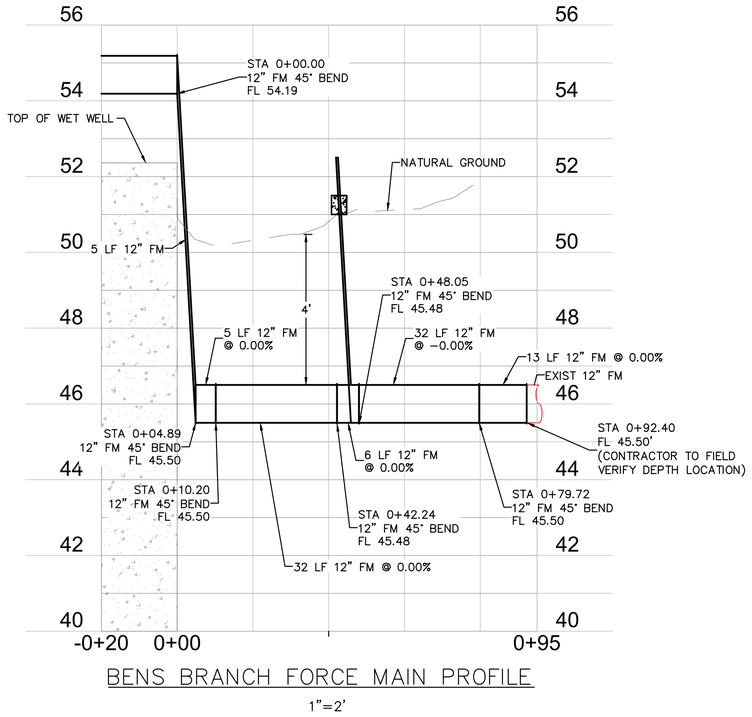

BENS BRANCH FORCE MAIN PROFILE

1"=2'

TEMPORARY BENCHMARK DESCRIPTION

TBM-530 CUT "X" IN TYPE "E" INLET – ELEVATION 49.87'
TBM-531 CUT "X" IN LIFT STATION DECK – ELEVATION 52.22'

LEGEND

EXISTING PAVEMENT

EXISTING GRASS AREA

PROPOSED PAVEMENT

NO.	DATE	REVISION	APP.

SCALE: 1"= 6'

0' 6' 12' 18'

NOTICE:
FOR YOUR SAFETY, YOU ARE REQUIRED BY TEXAS LAW TO CALL 811 AT LEAST 48 HOURS BEFORE YOU DIG SO THAT UNDERGROUND LINES CAN BE MARKED. THIS SIGNATURE DOES NOT FULFILL YOUR OBLIGATION TO CALL 811

VERIFICATION OF PRIVATE UTILITY LINES

Date

CenterPoint Energy natural gas utilities shown. (Gas service lines are not shown). This signature not be used for conflict verification.

Signature valid for six months.

Date

CenterPoint Energy/UNDERGROUND Electrical Facilities Verification ONLY. (This signature verifies existing underground facilities – not to be used for conflict verification)

Signature valid for six months.

Date

Approved for AT&T underground conduit facilities only.
Signature valid for one year.

PAPE-DAWSON
2107 CITYWEST BLVD, 3RD FLR I HOUSTON, TX 77042 I 713.428.2400
TEXAS ENGINEERING FIRM #470 I TEXAS SURVEYING FIRM #10028800

PAPE-DAWSON
2107 CITYWEST BOULEVARD
3RD FLR
HOUSTON, TEXAS 77402
713-428-2400
TX FIRM #470

SURVEYED BY:
PAPE-DAWSON
FB NO. 24-018

THIS DOCUMENT IS RELEASED FOR INTERIM REVIEW UNDER THE AUTHORIZATION OF AMIRHOSSEIN SHOKOUHI, P.E. (#139835) AND IS **NOT TO BE USED FOR CONSTRUCTION.**

CITY OF HOUSTON
HOUSTON PUBLIC WORKS

LIFT STATION REHABILITATION AND RECONSTRUCTION
BEN'S BRANCH, WOODLAND RIDGE, ELMWOOD HILLS, FOREST SHORES, TRAIL RIVER, RIVERLAWN

CIVIL

BENS BRANCH LIFT STATION PROPOSED FM PROFILE

WBS NUMBER	FOR CITY OF HOUSTON USE ONLY
R-000267-0180-3	
DRAWING SCALE	
AS NOTED	
CITY OF HOUSTON PM	
BRENDA JOHNSON P.E.	
SHEET NO. 104 OF 338	

BB-C-05

FILE PATH: K:\Projects\423\77 COH LS Package\00\03 CADD\Plans\Sheets\04 Bens Branch\BB FM PLAN & PROF-C-4237700.dwg

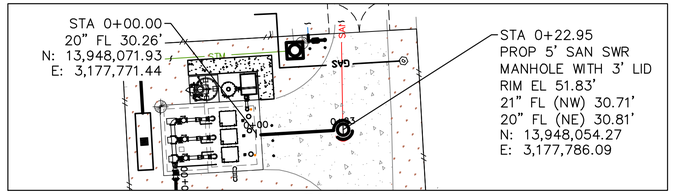

PLAN

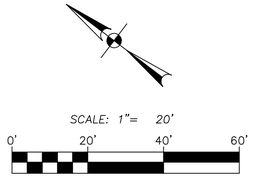

TEMPORARY BENCHMARK DESCRIPTION

LEGEND

- EXISTING PAVEMENT
- EXISTING GRASS AREA
- PROPOSED PAVEMENT

NO.	DATE	REVISION	APP.

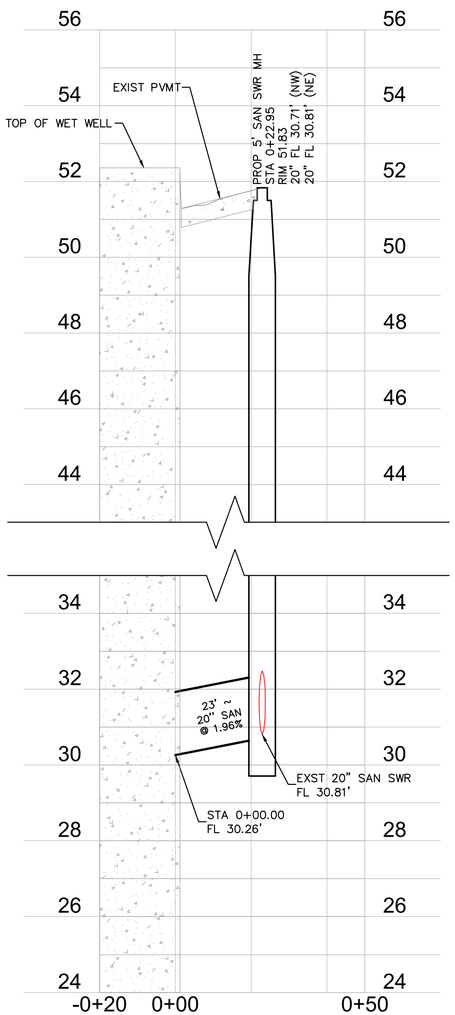

BENS BRANCH PROPOSED SANITARY PROFILE

1"=2'

NOTICE:

FOR YOUR SAFETY, YOU ARE REQUIRED BY TEXAS LAW TO CALL 811 AT LEAST 48 HOURS BEFORE YOU DIG SO THAT UNDERGROUND LINES CAN BE MARKED. THIS SIGNATURE DOES NOT FULFILL YOUR OBLIGATION TO CALL 811

VERIFICATION OF PRIVATE UTILITY LINES

Date

CenterPoint Energy natural gas utilities shown. (Gas service lines are not shown). This signature not be used for conflict verification.

Signature valid for six months.

Date

CenterPoint Energy/UNDERGROUND Electrical Facilities Verification ONLY. (This signature verifies existing underground facilities – not to be used for conflict verification)

Signature valid for six months.

Date

Approved for AT&T underground conduit facilities only.
Signature valid for one year.

PAPE–DAWSON

2107 CITYWEST BLVD, 3RD FLR I HOUSTON, TX 77042 I 713.428.2400

TEXAS ENGINEERING FIRM #470 I TEXAS SURVEYING FIRM #10028800

PAPE–DAWSON
2107 CITYWEST BOULEVARD
3RD FLR
HOUSTON, TEXAS 77402
713–428–2400
TX FIRM #470

SURVEYED BY:
PAPE–DAWSON
FB NO. 24–018

THIS DOCUMENT IS RELEASED FOR INTERIM REVIEW UNDER THE AUTHORIZATION OF AMIRHOSSEIN SHOKOUHI, P.E. (#139835) AND IS **NOT TO BE USED FOR CONSTRUCTION.**

CITY OF HOUSTON

HOUSTON PUBLIC WORKS

LIFT STATION REHABILITATION AND RECONSTRUCTION
BEN'S BRANCH, WOODLAND RIDGE, ELMWOOD HILLS, FOREST SHORES, TRAIL RIVER, RIVERLAWN

CIVIL

BENS BRANCH LIFT STATION SANITARY

WBS NUMBER	FOR CITY OF HOUSTON USE ONLY
R–000267–0180–3	
DRAWING SCALE	
AS NOTED	
CITY OF HOUSTON PM	
BRENDA JOHNSON P.E.	
SHEET NO. 106 OF 338	

BB–C–09

FILE PATH: K:\Projects\423\77 COH LS Package\00\03 CADD\Plans\Sheets\04 Bens Branch\BB SAN & STM PLAN & PROF–C–4237700.dwg

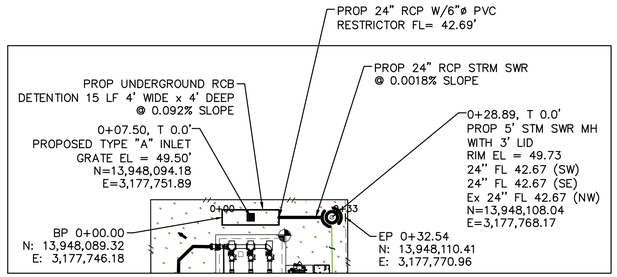

PLAN

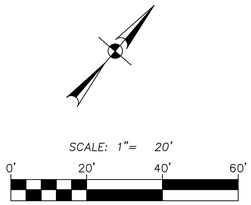

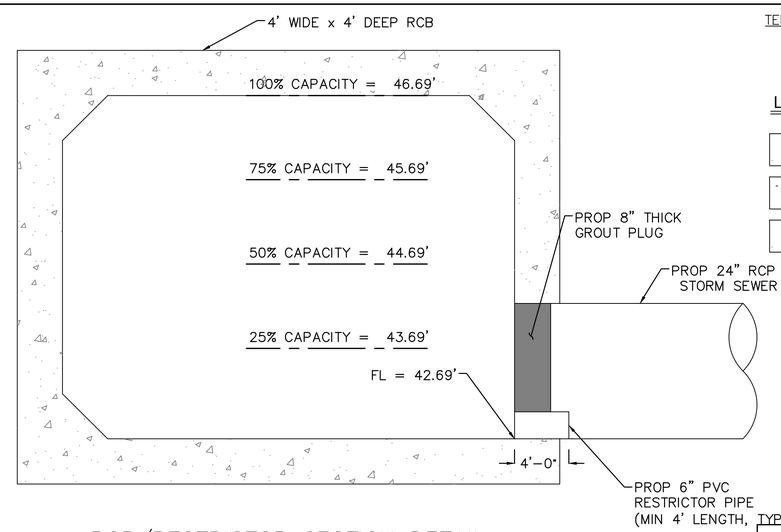

RCB/RESTRICTOR SECTION DETAIL

N.T.S.

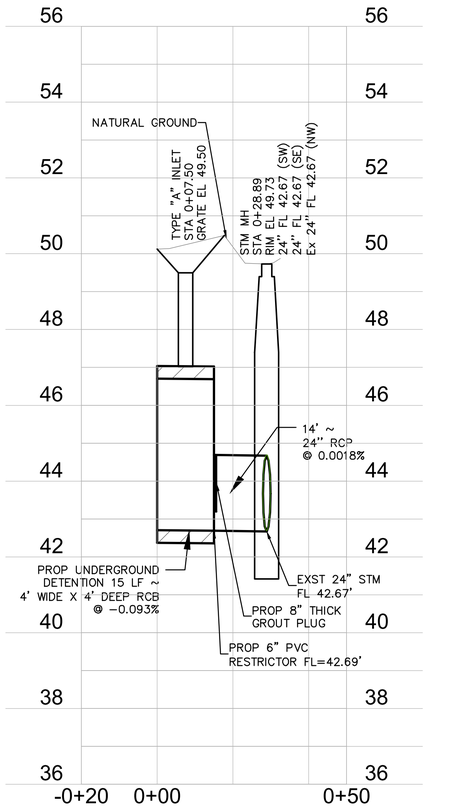

BENS BRANCH PROPOSED STORM PROFILE

1"=2'

BENS BRANCH LIFT STATION DETENTION & RESTRICTOR CALCULATIONS

DETENTION:

Disturbed Area	0.0072	ac
Detention Rate (R_d)	0.80	ac-ft/ac
Proposed (final) Impervious Area (A_p) =	0.0072	ac
Existing Impervious Area To Be Removed (A_e) =	0.0015	ac

Required Detention Volume = (Ap * Rd) - (Ae * 0.40 ac-ft/ac)
Total Required Detention Volume = 0.0051 ac-ft
Provided Detention Volume = 4' x 4' x 15' (W x D x L) = 0.0055 ac-ft

RESTRICTORS:

Low Level Restrictor (25% Flow)

Total Drainage Area =	0.0473	ac
Outflow Rate Allowed for Low Flow QL1 =	0.0237	cfs
Head HL1 (water surface differential) for Low Flow =	0.75	ft
Calculated Low Level Restrictor Size DL =	0.88	in
Provided/Designed Low Level Restrictor Size DL1 =	6	in

High Level Restrictor (75% Flow)

Total Drainage Area =	0.0473	ac
Total Outflow Rate (100%) Q =	0.0946	cfs
Re-calculated Head HL2 (water surface differential) for Low Level Restrictor =	2.75	ft
Re-calculated Low Flow Q L2 for Low Level Restrictor =	2.090	cfs
Outflow Rate Allowed for High Flow Qh1 (75%) =	-1.9958	cfs
Head Hh2 (water surface differential) for High Level Restrictor =	0.75	ft
Calculated High Level Restrictor Size Dh =	#NUM!	in
Provided/Designed High Level Restrictor Size Dh1 (75%) =	N/A	in

No need for High Level Restrictor

TEMPORARY BENCHMARK DESCRIPTION

LEGEND

- EXISTING PAVEMENT
- EXISTING GRASS AREA
- PROPOSED PAVEMENT

NO.	DATE	REVISION	APP.

NOTICE:
FOR YOUR SAFETY, YOU ARE REQUIRED BY TEXAS LAW TO CALL 811 AT LEAST 48 HOURS BEFORE YOU DIG SO THAT UNDERGROUND LINES CAN BE MARKED. THIS SIGNATURE DOES NOT FULFILL YOUR OBLIGATION TO CALL 811

VERIFICATION OF PRIVATE UTILITY LINES

Date

CenterPoint Energy natural gas utilities shown. (Gas service lines are not shown). This signature not be used for conflict verification.

Signature valid for six months.

Date

CenterPoint Energy/UNDERGROUND Electrical Facilities Verification ONLY. (This signature verifies existing underground facilities – not to be used for conflict verification)

Signature valid for six months.

Date

Approved for AT&T underground conduit facilities only.
Signature valid for one year.

PAPE–DAWSON
2107 CITYWEST BLVD, 3RD FLR I HOUSTON, TX 77042 I 713.428.2400
TEXAS ENGINEERING FIRM #470 I TEXAS SURVEYING FIRM #10028800

PAPE–DAWSON
2107 CITYWEST BOULEVARD
3RD FLR
HOUSTON, TEXAS 77402
713–428–2400
TX FIRM #470

SURVEYED BY:
PAPE–DAWSON
FB NO. 24–018

THIS DOCUMENT IS RELEASED FOR INTERIM REVIEW UNDER THE AUTHORIZATION OF AMIRHOSSEIN SHOKOUHI, P.E. (#139835) AND IS **NOT TO BE USED FOR CONSTRUCTION.**

CITY OF HOUSTON
HOUSTON PUBLIC WORKS

LIFT STATION REHABILITATION AND RECONSTRUCTION
BEN'S BRANCH, WOODLAND RIDGE, ELMWOOD HILLS, FOREST SHORES, TRAIL RIVER, RIVERLAWN

CIVIL

BENS BRANCH LIFT STATION STORM SEWER P & P AND DRAINAGE CALC

WBS NUMBER	FOR CITY OF HOUSTON USE ONLY
R–000267–0180–3	
DRAWING SCALE	
AS NOTED	
CITY OF HOUSTON PM	
BRENDA JOHNSON P.E.	
SHEET NO. 107 OF 338	

BB–C–08

FILE PATH: K:\Projects\423\77 COH LS Package\00\03 CADD\Plans\Sheets\04 Bens Branch\BB SAN & STM PLAN & PROF–C–4237700.dwg

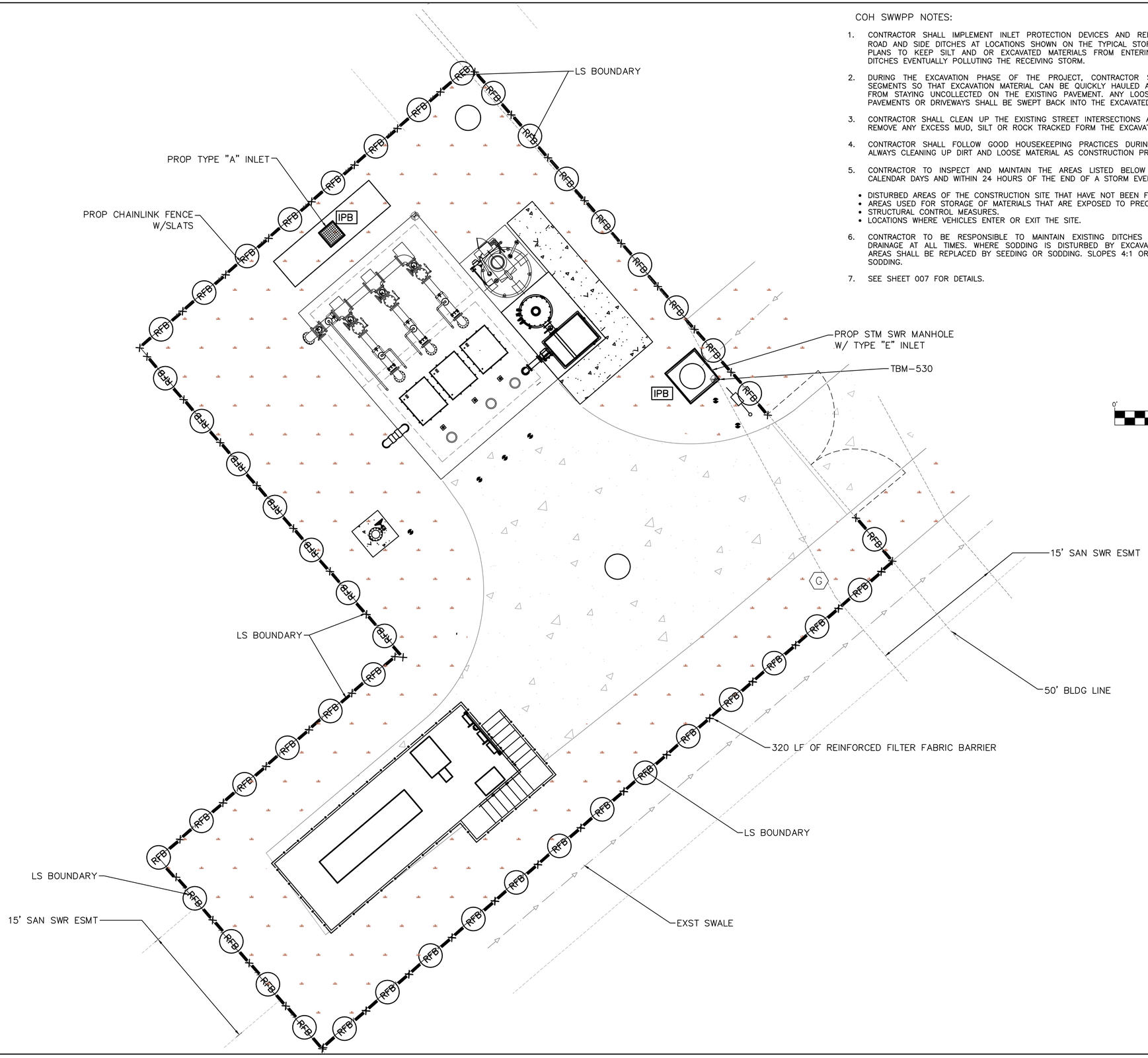

COH SWWPP NOTES:

1. CONTRACTOR SHALL IMPLEMENT INLET PROTECTION DEVICES AND REINFORCED FILTER FABRIC BARRIER ALONG ROAD AND SIDE DITCHES AT LOCATIONS SHOWN ON THE TYPICAL STORM WATER POLLUTION PREVENTION (SWPP) PLANS TO KEEP SILT AND OR EXCAVATED MATERIALS FROM ENTERING INTO THE STORM WATER INLETS AND DITCHES EVENTUALLY POLLUTING THE RECEIVING STORM.
2. DURING THE EXCAVATION PHASE OF THE PROJECT, CONTRACTOR SHALL SCHEDULE THE WORK IN SHORT SEGMENTS SO THAT EXCAVATION MATERIAL CAN BE QUICKLY HAULED AWAY FROM THE SITE AND TO PREVENT IT FROM STAYING UNCOLLECTED ON THE EXISTING PAVEMENT. ANY LOOSE EXCAVATED MATERIAL WHICH FALLS ON PAVEMENTS OR DRIVEWAYS SHALL BE SWEPT BACK INTO THE EXCAVATED AREA.
3. CONTRACTOR SHALL CLEAN UP THE EXISTING STREET INTERSECTIONS AND DRIVEWAYS DAILY, AS NECESSARY, TO REMOVE ANY EXCESS MUD, SILT OR ROCK TRACKED FORM THE EXCAVATED AREA.
4. CONTRACTOR SHALL FOLLOW GOOD HOUSEKEEPING PRACTICES DURING THE CONSTRUCTION OF THE PROJECT, ALWAYS CLEANING UP DIRT AND LOOSE MATERIAL AS CONSTRUCTION PROGRESSES.
5. CONTRACTOR TO INSPECT AND MAINTAIN THE AREAS LISTED BELOW AT LEAST ONCE EVERY FOURTEEN (14) CALENDAR DAYS AND WITHIN 24 HOURS OF THE END OF A STORM EVENT OF 0.5 INCHES OR GREATER.
   - DISTURBED AREAS OF THE CONSTRUCTION SITE THAT HAVE NOT BEEN FINALLY STABILIZED.
   - AREAS USED FOR STORAGE OF MATERIALS THAT ARE EXPOSED TO PRECIPITATION.
   - STRUCTURAL CONTROL MEASURES.
   - LOCATIONS WHERE VEHICLES ENTER OR EXIT THE SITE.
6. CONTRACTOR TO BE RESPONSIBLE TO MAINTAIN EXISTING DITCHES AND OR CULVERTS FOR UNOBSTRUCTED DRAINAGE AT ALL TIMES. WHERE SODDING IS DISTURBED BY EXCAVATION ON BACKFILLING OPERATIONS, SUCH AREAS SHALL BE REPLACED BY SEEDING OR SODDING. SLOPES 4:1 OR STEEPER SHALL BE REPLACED BY BLOCK SODDING.
7. SEE SHEET 007 FOR DETAILS.

SCALE: 1"= 6'
0' 6' 12' 18'

TEMPORARY BENCHMARK DESCRIPTION
TBM-530 CUT "X" IN TYPE "E" INLET – ELEVATION 49.87'
TBM-531 CUT "X" IN LIFT STATION DECK – ELEVATION 52.22'

LEGEND

- RFB — REINFORCED FILTER FABRIC BARRIER
- EXISTING PAVEMENT
- EXISTING GRASS AREA
- PROPOSED PAVEMENT
- IPB — INLET PROTECTION BARRIER

NO.	DATE	REVISION	APP.

NOTICE:
FOR YOUR SAFETY, YOU ARE REQUIRED BY TEXAS LAW TO CALL 811 AT LEAST 48 HOURS BEFORE YOU DIG SO THAT UNDERGROUND LINES CAN BE MARKED. THIS SIGNATURE DOES NOT FULFILL YOUR OBLIGATION TO CALL 811

VERIFICATION OF PRIVATE UTILITY LINES

Date

CenterPoint Energy natural gas utilities shown. (Gas service lines are not shown). This signature not be used for conflict verification.

Signature valid for six months.

Date

CenterPoint Energy/UNDERGROUND Electrical Facilities Verification ONLY. (This signature verifies existing underground facilities – not to be used for conflict verification)

Signature valid for six months.

Date

Approved for AT&T underground conduit facilities only.
Signature valid for one year.

PAPE-DAWSON
2107 CITYWEST BLVD, 3RD FLR I HOUSTON, TX 77042 I 713.428.2400
TEXAS ENGINEERING FIRM #470 I TEXAS SURVEYING FIRM #10028800

PAPE-DAWSON
2107 CITYWEST BOULEVARD
3RD FLR
HOUSTON, TEXAS 77402
713-428-2400
TX FIRM #470

SURVEYED BY:
PAPE-DAWSON
FB NO. 24-018

THIS DOCUMENT IS RELEASED FOR INTERIM REVIEW UNDER THE AUTHORIZATION OF AMIRHOSSEIN SHOKOUHI, P.E. (#139835) AND IS **NOT TO BE USED FOR CONSTRUCTION.**

CITY OF HOUSTON
HOUSTON PUBLIC WORKS

LIFT STATION REHABILITATION AND RECONSTRUCTION
BEN'S BRANCH, WOODLAND RIDGE, ELMWOOD HILLS, FOREST SHORES, TRAIL RIVER, RIVERLAWN

CIVIL

BEN'S BRANCH LIFT STATION SWPPP

WBS NUMBER	FOR CITY OF HOUSTON USE ONLY
R-000267-0180-3	
DRAWING SCALE	
AS NOTED	
CITY OF HOUSTON PM	
BRENDA JOHNSON P.E.	
SHEET NO. 108 OF 338	

BB-C-09

FILE PATH: K:\Projects\423\77 COH LS Package\00\03 CADD\Plans\Sheets\04 Bens Branch\SWPPP.dwg

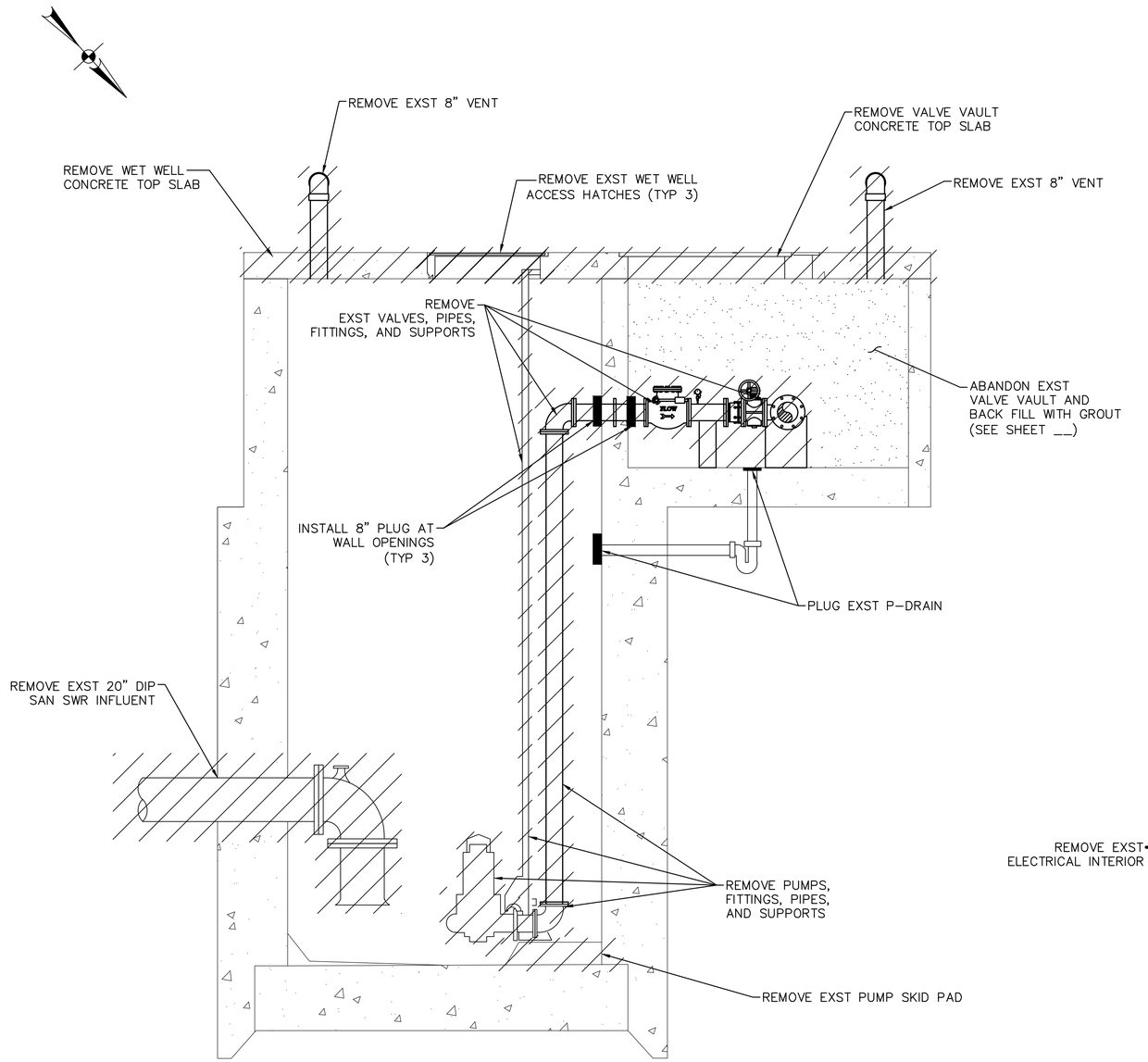

SECTION VIEW

SCALE 3/8"=1'-0"

VALVE VAULT

NTS

LEGEND

TO BE REMOVED

NO.	DATE	REVISION	APP.

NOTICE:
FOR YOUR SAFETY, YOU ARE REQUIRED BY TEXAS LAW TO CALL 811 AT LEAST 48 HOURS BEFORE YOU DIG SO THAT UNDERGROUND LINES CAN BE MARKED. THIS SIGNATURE DOES NOT FULFILL YOUR OBLIGATION TO CALL 811

VERIFICATION OF PRIVATE UTILITY LINES

Date

CenterPoint Energy natural gas utilities shown. (Gas service lines are not shown). This signature not be used for conflict verification.

Signature valid for six months.

Date

CenterPoint Energy/UNDERGROUND Electrical Facilities Verification ONLY. (This signature verifies existing underground facilities – not to be used for conflict verification)

Signature valid for six months.

Date

Approved for AT&T underground conduit facilities only.
Signature valid for one year.

PAPE-DAWSON
2107 CITYWEST BLVD, 3RD FLR I HOUSTON, TX 77042 I 713.428.2400
TEXAS ENGINEERING FIRM #470 I TEXAS SURVEYING FIRM #10028800

PAPE-DAWSON
2107 CITYWEST BOULEVARD
3RD FLR
HOUSTON, TEXAS 77402
713-428-2400
TX FIRM #470

SURVEYED BY:
PAPE-DAWSON
FB NO. 24-018

THIS DOCUMENT IS RELEASED FOR INTERIM REVIEW UNDER THE AUTHORIZATION OF AMIRHOSSEIN SHOKOUHI, P.E. (#139835) AND IS **NOT TO BE USED FOR CONSTRUCTION.**

CITY OF HOUSTON
HOUSTON PUBLIC WORKS

LIFT STATION REHABILITATION AND RECONSTRUCTION
BEN'S BRANCH, WOODLAND RIDGE, ELMWOOD HILLS, FOREST SHORES, TRAIL RIVER, RIVERLAWN

MECHANICAL

BEN'S BRANCH LIFT STATION DEMOLITION- SECTIONS

WBS NUMBER	FOR CITY OF HOUSTON USE ONLY
R-000267-0180-3	
DRAWING SCALE	
AS NOTED	
CITY OF HOUSTON PM	
BRENDA JOHNSON P.E.	
SHEET NO. 113 OF 338	

BB-M-01

FILE PATH: K:\Projects\423\77 COH LS Package\00\03 CADD\Plans\Sheets\04 Bens Branch\BB PROP DEMO SECTION-C-4237700.dwg

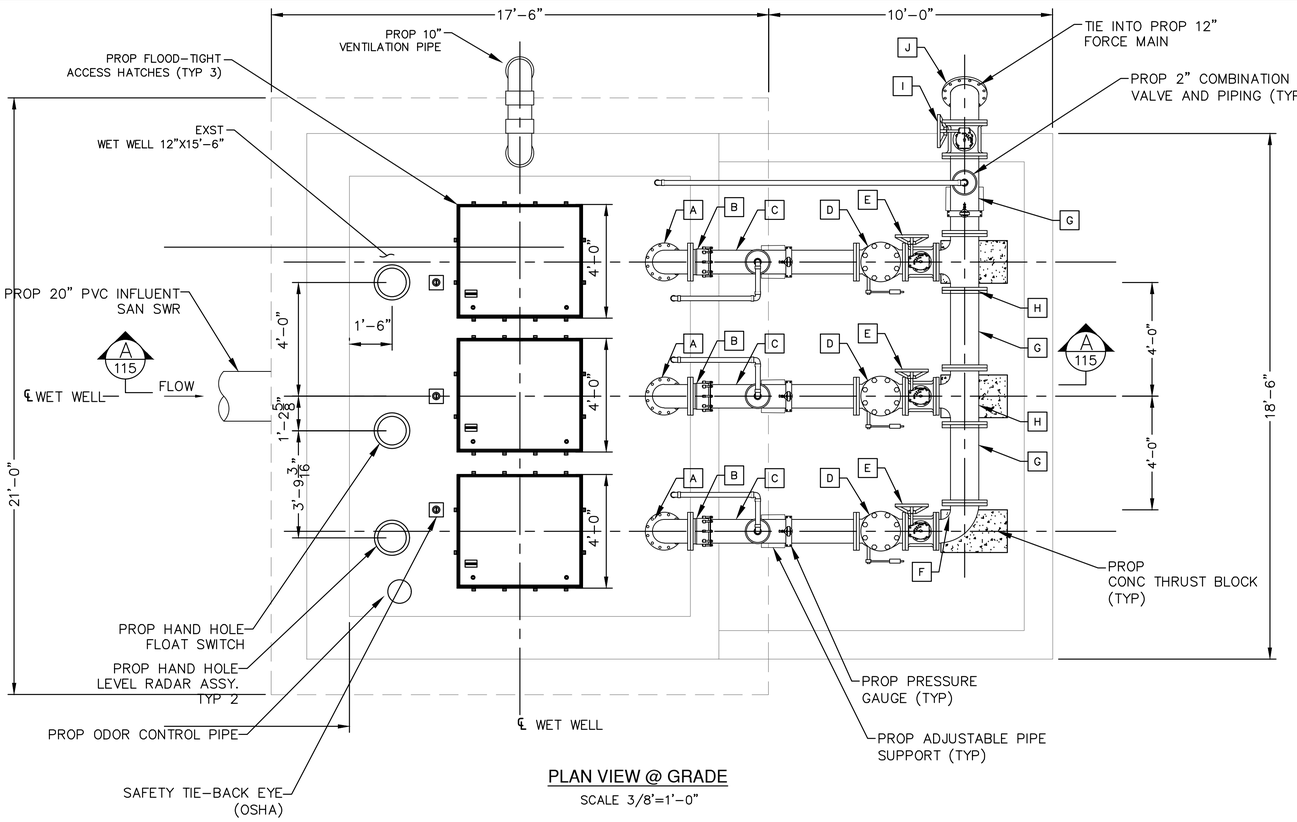

PLAN VIEW @ GRADE

SCALE 3/8"=1'-0"

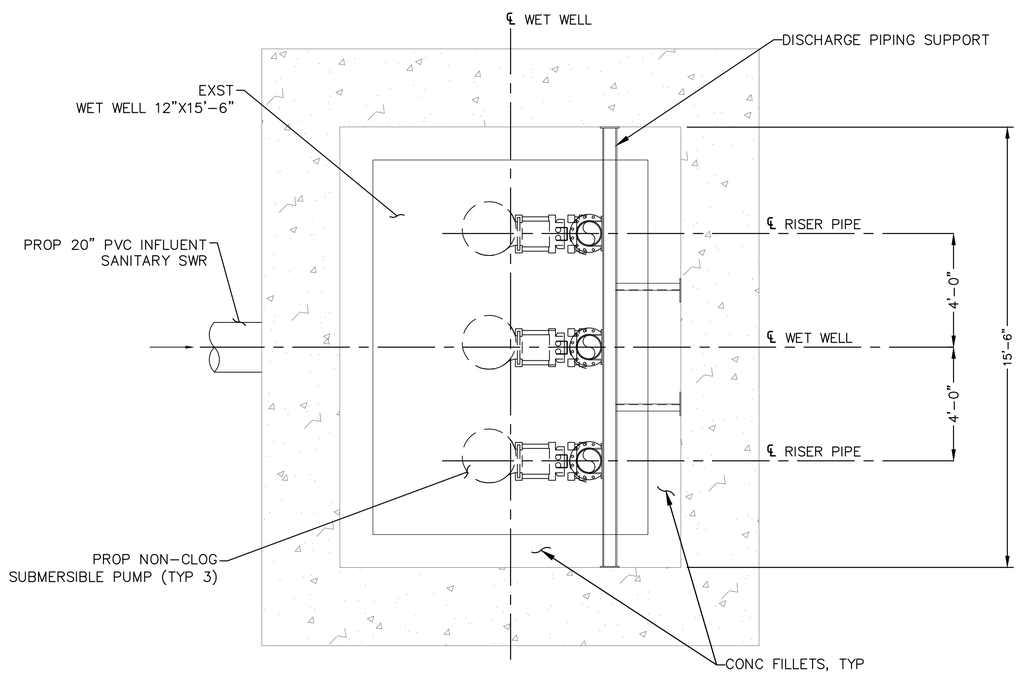

PLAN VIEW @ ELEVATION 49.00'

SCALE 3/8"=1'-0"

PIPE AND FITTING SCHEDULE		
MARK	DESCRIPTION	CONNECTION
A	10"x90° BEND	FLG/FLG
B	10" RESTRAINED FLANGED COUPLING ADAPTOR	FCA501 OR APPROVED EQUAL
C	10" SPOOL	FLG/FLG
D	10" CHECK VALVE	FLG
E	10" PLUG VALVE	FLG
F	10"x12"x90° REDUCING BEND	FLG/FLG
G	12" SPOOL	FLG/FLG
H	10"x12" REDUCING TEE	FLG
I	12" PLUG VALVE	FLG
J	12"x45° BEND	FLG

LIFT STATION NOTES:

1. ALL SUPPORT BRACKETS, HARDWARE, ANCHORS, BOLTS, ETC. INSIDE WET WELL SHALL BE TYPE 316 STAINLESS STEEL.
2. ALL INTERIOR SURFACES OF CONC WET WELL SHALL BE COATED WITH AN 80 MIL (MIN.) COAT OF RAVEN 405 ULTRA HIGH BUILD EPOXY COATING, SPRAY WALL EPOXY COATING, OR APPROVED EQUAL.
3. ALL PUMP DISCHARGE PIPING IN WET WELL AND VALVE PAD TO BE FLANGED (INSIDE WET WELL/PAD) OR TR FLEX RESTRAINED MECHANICAL JOINT (WHEN BURIED) DUCTILE IRON PIPING. ALL DUCTILE IRON PIPING SHALL BE EPOXY LINED WITH TNEMEC SERIES 431 PERMA-SHIELD PL CERAMIC EPOXY OR APPROVED EQUAL.
4. ALL EXPOSED DUCTILE IRON PIPING, FITTINGS, AND VALVES SHALL BE SANDBLASTED AND COATED WITH TWO (2) COATS OF TNEMEC SERIES 27WB TYPOXY APPLIED AT 6.0 TO 8.0 DRY MILS AND TOPCOATED WITH TNEMEC SERIES 740 UVX APPLIED AT 3.0 TO 5.0 DRY MILS. FINAL COLOR TO BE APPROVED BY THE CITY. SHOP PRIMING WITH TNEMEC SERIES N140 IS ACCEPTABLE. BITUMASTIC COATING SHALL NOT BE APPLIED TO EXPOSED DI PIPING.
5. ALL BURIED DUCTILE IRON PIPING, FITTINGS, AND VALVES SHALL BE WRAPPED WITH A POLYETHYLENE ENCASEMENT IN ACCORDANCE WITH THE LATEST REVISION OF AWWA C105.
6. ALL MECHANICAL JOINT FITTINGS TO BE RESTRAINED USING SERIES 1100 OR 2000PV MEGALUG JOINT RESTRAINTS.
7. PUMP SPACING DIMENSIONS SHOWN ARE APPROXIMATE. ACTUAL DIMENSIONS SHALL BE DETERMINED BY SPECIFIC PUMP MANUFACTURER.
8. PRIMARY LEVEL CONTROL WILL BE PROVIDED BY A SUBMERSIBLE LEVEL TRANSDUCER WITH OPERATION POINTS AS DETERMINED BY ENGINEER. MULTITRODE PROBES ARE FOR BACKUP OPERATION ONLY. REFER TO ELECTRICAL SPECIFICATIONS FOR EQUIPMENT INFORMATION.
9. FLOOD-TIGHT ACCESS HATCH AS SHOWN OR AS REQUIRED BY PUMP MANUFACTURER. DIMENSION MAY VARY PER HATCH MANUFACTURER.

NO.	DATE	REVISION	APP.

NOTICE:
FOR YOUR SAFETY, YOU ARE REQUIRED BY TEXAS LAW TO CALL 811 AT LEAST 48 HOURS BEFORE YOU DIG SO THAT UNDERGROUND LINES CAN BE MARKED. THIS SIGNATURE DOES NOT FULFILL YOUR OBLIGATION TO CALL 811

VERIFICATION OF PRIVATE UTILITY LINES

Date

CenterPoint Energy natural gas utilities shown. (Gas service lines are not shown). This signature not be used for conflict verification.

Signature valid for six months.

Date

CenterPoint Energy/UNDERGROUND Electrical Facilities Verification ONLY. (This signature verifies existing underground facilities – not to be used for conflict verification)

Signature valid for six months.

Date

Approved for AT&T underground conduit facilities only.
Signature valid for one year.

PAPE-DAWSON
2107 CITYWEST BLVD, 3RD FLR I HOUSTON, TX 77042 I 713.428.2400
TEXAS ENGINEERING FIRM #470 I TEXAS SURVEYING FIRM #10028800

PAPE-DAWSON
2107 CITYWEST BOULEVARD
3RD FLR
HOUSTON, TEXAS 77402
713-428-2400
TX FIRM #470

SURVEYED BY:
PAPE-DAWSON
FB NO. 24-018

THIS DOCUMENT IS RELEASED FOR INTERIM REVIEW UNDER THE AUTHORIZATION OF AMIRHOSSEIN SHOKOUHI, P.E. (#139835) AND IS **NOT TO BE USED FOR CONSTRUCTION.**

CITY OF HOUSTON
HOUSTON PUBLIC WORKS

LIFT STATION REHABILITATION AND RECONSTRUCTION
BEN'S BRANCH, WOODLAND RIDGE, ELMWOOD HILLS, FOREST SHORES, TRAIL RIVER, RIVERLAWN

MECHANICAL

BENS BRANCH LIFT STATION PROPOSED PLAN

WBS NUMBER	FOR CITY OF HOUSTON USE ONLY
R-000267-0180-3	
DRAWING SCALE	
AS NOTED	
CITY OF HOUSTON PM	
BRENDA JOHNSON P.E.	
SHEET NO. 114 OF 338	

BB-M-02

FILE PATH: K:\Projects\423\77 COH LS Package\00\03 CADD\Plans\Sheets\04 Bens Branch\BB PROP PLAN VIEW-M-4237700.dwg

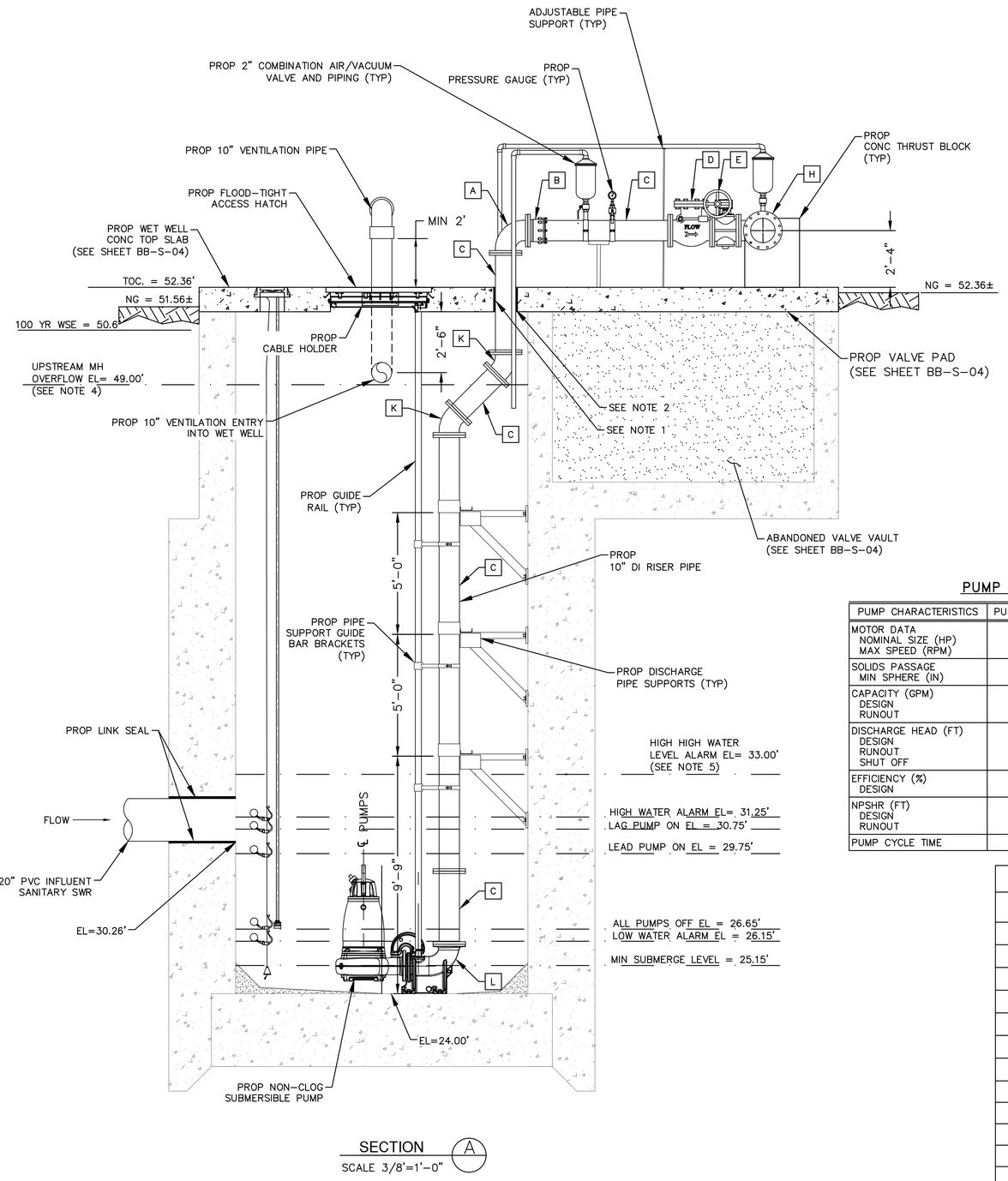

SECTION A

SCALE 3/8"=1'-0"

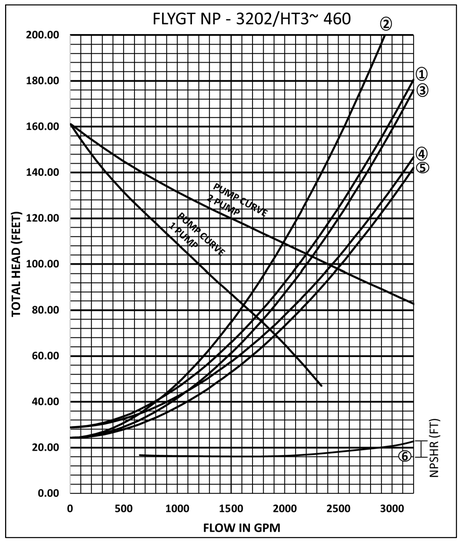

PUMP OPERATION CURVES

PUMP CURVE NOTES:

1. LOW NORMAL OPERATING LEVEL C=120 – DESIGN.
2. HIGH NORMAL OPERATING LEVEL C=100 – INFORMATION ONLY (TCEQ)
3. HIGH NORMAL OPERATING LEVEL C=120 – DESIGN
4. HIGH NORMAL OPERATING LEVEL C=140 – INFORMATION ONLY
5. EMERGENCY FLOODED OPERATING LEVEL C=140 – MAXIMUM DISCHARGE
6. NET POSITIVE SUCTION HEAD AVAILABLE (NPSHA) BASED ON NORMAL OPERATING WATER LEVELS
7. PUMP CURVES ARE MODIFIED FOR STATION LOSSES.

NOTE:

1. SLEEVED OPENING, SEAL W/ LINK-SEAL OR APPROVED EQUAL. AT TOP OF SLAB FILL VOID AROUND SEAL W/ GROUT & RECESS APPROX ¼" BELOW TOP OF SLAB. (SEE SHEET 025)
2. SLEEVED WET WELL PENETRATION (SEE SHEET 025)
3. PROP ALL PUMPS OFF LEVEL 1 FT HIGHER THE PUMP MIN SUBMERGE LEVEL
4. UPSTREAM MH OVERFLOW ELEVATION PROVIDED BY CITY OF HOUSTON WASTEWATER PLANNING DEPARTMENT.
5. HIGH HIGH WATER LEVEL ALARM ELEVATION TO PROVIDE MINIMUM 2 HOURS RESPONSE TIME PRIOR TO UPSTREAM MANHOLE OVERFLOW ELEVATIONY OF HOUSTON INFRASTRUCTURE PLANNING DEPARTMENT.
6. SEE SHEET BB-M-02 FOR LIFT STATION NOTES.

PUMP DATA TABLE

PUMP CHARACTERISTICS	PUMP NO. 1	PUMP NO. 2	PUMP NO. 3
MOTOR DATA NOMINAL SIZE (HP) MAX SPEED (RPM)	 60 1780	 60 1780	 60 1780
SOLIDS PASSAGE MIN SPHERE (IN)	 <3	 <3	 <3
CAPACITY (GPM) DESIGN RUNOUT	 1600 2340	 1600 2340	 1600 2340
DISCHARGE HEAD (FT) DESIGN RUNOUT SHUT OFF	 84 46.94 160	 84 46.94 160	 84 46.94 160
EFFICIENCY (%) DESIGN	 71.2	 71.2	 71.2
NPSHR (FT) DESIGN RUNOUT	 16.88 47.27	 16.88 47.27	 16.88 47.27
PUMP CYCLE TIME	10	10	10

STATION OPERATION TABLES

RISING LEVEL CYCLE

WATER LEVEL DEPTH	WATER LEVEL ELEVATION	ACTION	PUMP(S) IN OPERATION
2.65	26.65	PUMPS OFF LEVEL – NO ACTION	ALL PUMPS ARE OFF
5.75	29.75	LEAD PUMP TURNS ON	LEAD PUMP ON
6.75	30.75	SECOND PUMP TURNS ON	LEAD & SECOND PUMPS ON
6.25	31.25	HIGH WATER ALARM ON	HIGH WATER ALARM SOUND
9.00	33.00	HIGH HIGH LEVEL ALARM (FLOAT ON LEVEL)	ALL PUMPS ON FLOAT

FALLING LEVEL CYCLE

WATER LEVEL DEPTH	WATER LEVEL ELEVATION	ACTION	PUMP(S) IN OPERATION
8.50	32.50	FLOAT OFF LEVEL	ALL PUMPS OFF FLOATS
6.75	30.75	HIGH WATER LEVEL ALARM OFF	LEAD & SECOND PUMPS ON
5.75	29.75	LEAD PUMP TURNS OFF	SECOND PUMP ON
2.65	26.65	SECOND PUMP TURNS OFF	ALL PUMPS STOPPED – STANDBY PUMP SWITCHES TO LEAD PUMP
2.15	26.15	LOW LEVEL ALARM	–

PIPE AND FITTING SCHEDULE

MARK	DESCRIPTION	CONNECTION
A	10"x90° BEND	FLG/FLG
B	10" RESTRAINED FLANGED COUPLING ADAPTOR	FCA501 OR APPROVED EQUAL
C	10" SPOOL	FLG/FLG
D	10" CHECK VALVE	FLG
E	10" PLUG VALVE	FLG
F	10"x12"x90° REDUCING BEND	FLG/FLG
G	12" SPOOL	FLG/FLG
H	10"x12" REDUCING TEE	FLG
I	12" PLUG VALVE	FLG
J	12"x45° BEND	FLG
K	10"x45° BEND	FLG
L	10"x6"x90° REDUCING BEND	FLG/FLG
M	PUMP BASE	FLG/FLG

NO.	DATE	REVISION	APP.

NOTICE:
FOR YOUR SAFETY, YOU ARE REQUIRED BY TEXAS LAW TO CALL 811 AT LEAST 48 HOURS BEFORE YOU DIG SO THAT UNDERGROUND LINES CAN BE MARKED. THIS SIGNATURE DOES NOT FULFILL YOUR OBLIGATION TO CALL 811

VERIFICATION OF PRIVATE UTILITY LINES

Date

CenterPoint Energy natural gas utilities shown. (Gas service lines are not shown). This signature not be used for conflict verification.

Signature valid for six months.

Date

CenterPoint Energy/UNDERGROUND Electrical Facilities Verification ONLY. (This signature verifies existing underground facilities – not to be used for conflict verification)

Signature valid for six months.

Date

Approved for AT&T underground conduit facilities only.
Signature valid for one year.

PAPE-DAWSON
2107 CITYWEST BLVD, 3RD FLR I HOUSTON, TX 77042 I 713.428.2400
TEXAS ENGINEERING FIRM #470 I TEXAS SURVEYING FIRM #10028800

PAPE-DAWSON
2107 CITYWEST BOULEVARD 3RD FLR
HOUSTON, TEXAS 77402
713-428-2400
TX FIRM #470

SURVEYED BY:
PAPE-DAWSON
FB NO. 24-018

THIS DOCUMENT IS RELEASED FOR INTERIM REVIEW UNDER THE AUTHORIZATION OF AMIRHOSSEIN SHOKOUHI, P.E. (#139835) AND IS **NOT TO BE USED FOR CONSTRUCTION.**

CITY OF HOUSTON
HOUSTON PUBLIC WORKS

LIFT STATION REHABILITATION AND RECONSTRUCTION
BEN'S BRANCH, WOODLAND RIDGE, ELMWOOD HILLS, FOREST SHORES, TRAIL RIVER, RIVERLAWN

MECHANICAL

BENS BRANCH LIFT STATION PROPOSED SECTIONS

WBS NUMBER	FOR CITY OF HOUSTON USE ONLY
R-000267-0180-3	
DRAWING SCALE	
AS NOTED	
CITY OF HOUSTON PM	
BRENDA JOHNSON P.E.	
SHEET NO. 115 OF 338	

BB-M-03

FILE PATH: K:\Projects\423\77 COH LS Package\00\03 CADD\Plans\Sheets\04 Bens Branch\BB PROP PLAN VIEW-M-4237700.dwg

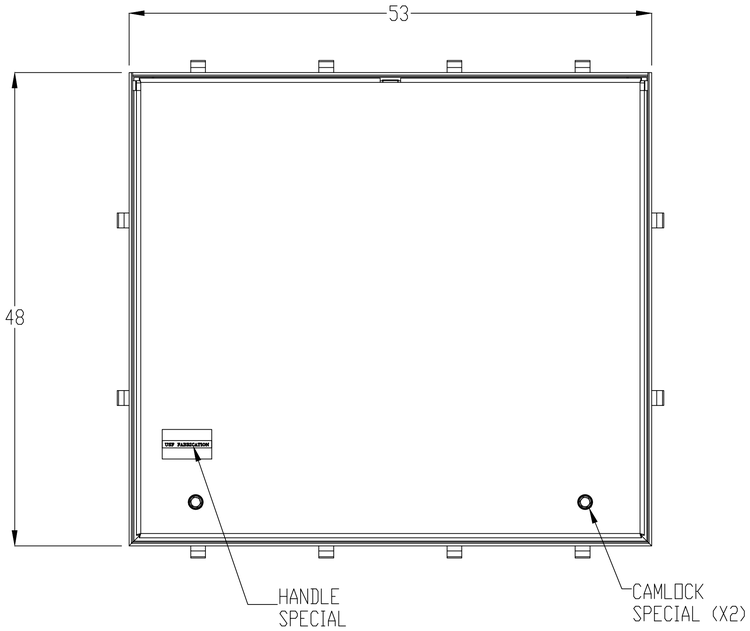

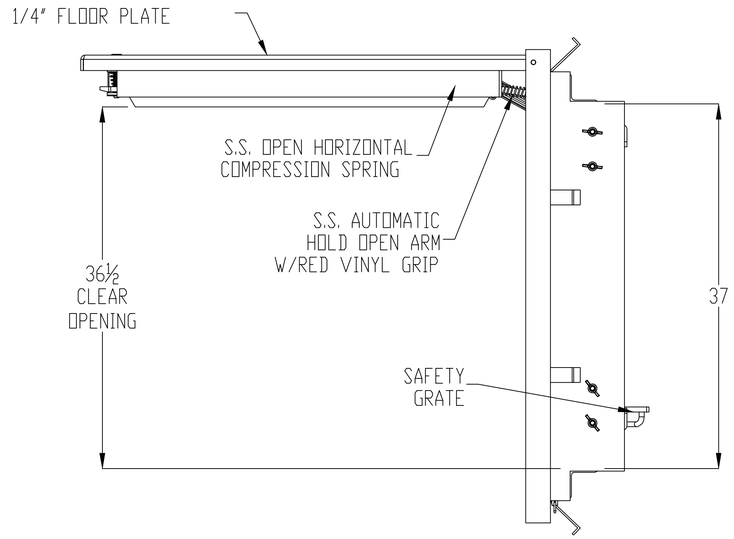

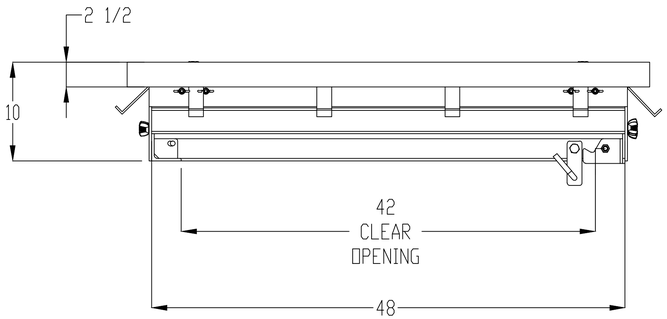

NOTES:
1- MATERIAL: ALUMINUM
MILL FINISH
2- LOADING DESIGNED FOR OFF STREET
LOCATIONS WHICH MAY OCCASIONALLY
RECEIVE H-20 WHEEL LOADS.
3- 316 STAINLESS STEEL BOLTS & NUTS
4- AREA OF FRAME IN CONTACT WITH CONCRETE
TO BE PAINTED WITH BITUMINOUS COATING
5- THIS DESIGN HAS BEEN TESTED AND CERTIFIELD TO BE FLOOD TIGHT
FOR UP TO 13FT. OF WATER, WITH ZERO LEAKAGE.
6- GASKET AND FRAME MUST BE FREE OF ANY DIRT OR DEBRIS PRIOR TO
CLOSING AND ALL CAM LOCKS MUST BE FULLY ENGAGED TO ENSURE
MAXIMUM FLOOD RESISTANCE

THIS DOCUMENT IS THE PROPERTY OF U.S.F. FABRICATION, INC AND CONTAINS
PROPRIETARY INFORMATION. IT SHALL NOT BE MODIFIED, COPIED, FURNISHED NOR DISTRIBUTED
(IN WHOLE OR IN PART) WITHOUT PROPER AUTHORIZATION OF U.S.F. FABRICATION, INC.

INTERPRET DIMENSIONS AND TOLERANCES PER ASME Y14.5M
BREAK ALL SHARP CORNERS & EDGES TO 0.01
TOLERANCES UNLESS OTHERWISE SPECIFIED:
INCHES = +/- 1/16
1/16 = +/- 1/32
1/32 = +/- 1/64

COPYRIGHT © 2025
ALL RIGHTS RESERVED

U.S.F. FABRICATION INC.
HIALEAH, FLORIDA

HATCH ZAHS 37X48
ASSEMBLY (ZERO LEAK)

DRAWN BY:	SCALE: 1:12	SHEET 2 OF 2	DATE: 9/23/25	
APP'D BY: JG	DWG. NO: 1000290567		SHEET SIZE: B	REV: 0

NO.	DATE	REVISION	APP.

NOTICE:
FOR YOUR SAFETY, YOU ARE REQUIRED BY TEXAS LAW TO CALL 811 AT LEAST 48 HOURS BEFORE YOU DIG SO THAT UNDERGROUND LINES CAN BE MARKED. THIS SIGNATURE DOES NOT FULFILL YOUR OBLIGATION TO CALL 811

VERIFICATION OF PRIVATE UTILITY LINES

Date

CenterPoint Energy natural gas utilities shown. (Gas service lines are not shown). This signature not be used for conflict verification.

Signature valid for six months.

Date

CenterPoint Energy/UNDERGROUND Electrical Facilities Verification ONLY. (This signature verifies existing underground facilities – not to be used for conflict verification)

Signature valid for six months.

Date

Approved for AT&T underground conduit facilities only. Signature valid for one year.

PAPE–DAWSON
2107 CITYWEST BLVD, 3RD FLR I HOUSTON, TX 77042 I 713.428.2400
TEXAS ENGINEERING FIRM #470 I TEXAS SURVEYING FIRM #10028800

PAPE–DAWSON
2107 CITYWEST BOULEVARD
3RD FLR
HOUSTON, TEXAS 77402
713–428–2400
TX FIRM #470

SURVEYED BY:
PAPE–DAWSON
FB NO. 24–018

THIS DOCUMENT IS RELEASED FOR INTERIM REVIEW UNDER THE AUTHORIZATION OF AMIRHOSSEIN SHOKOUHI, P.E. (#139835) AND IS **NOT TO BE USED FOR CONSTRUCTION.**

CITY OF HOUSTON
HOUSTON PUBLIC WORKS

LIFT STATION REHABILITATION AND RECONSTRUCTION
BEN'S BRANCH, WOODLAND RIDGE, ELMWOOD HILLS, FOREST SHORES, TRAIL RIVER, RIVERLAWN

CIVIL

BEN'S BRANCH LIFT STATION FLOOD–TIGHT ACCESS HATCH DETAIL

WBS NUMBER	FOR CITY OF HOUSTON USE ONLY
R–000267–0180–3	
DRAWING SCALE	
AS NOTED	
CITY OF HOUSTON PM	
BRENDA JOHNSON P.E.	
SHEET NO. OF 338	

FILE PATH: K:\Projects\423\77 COH LS Package\00\03 CADD\Plans\Sheets\04 Bens Branch\BB ACCESS HATCH DETAIL.dwg

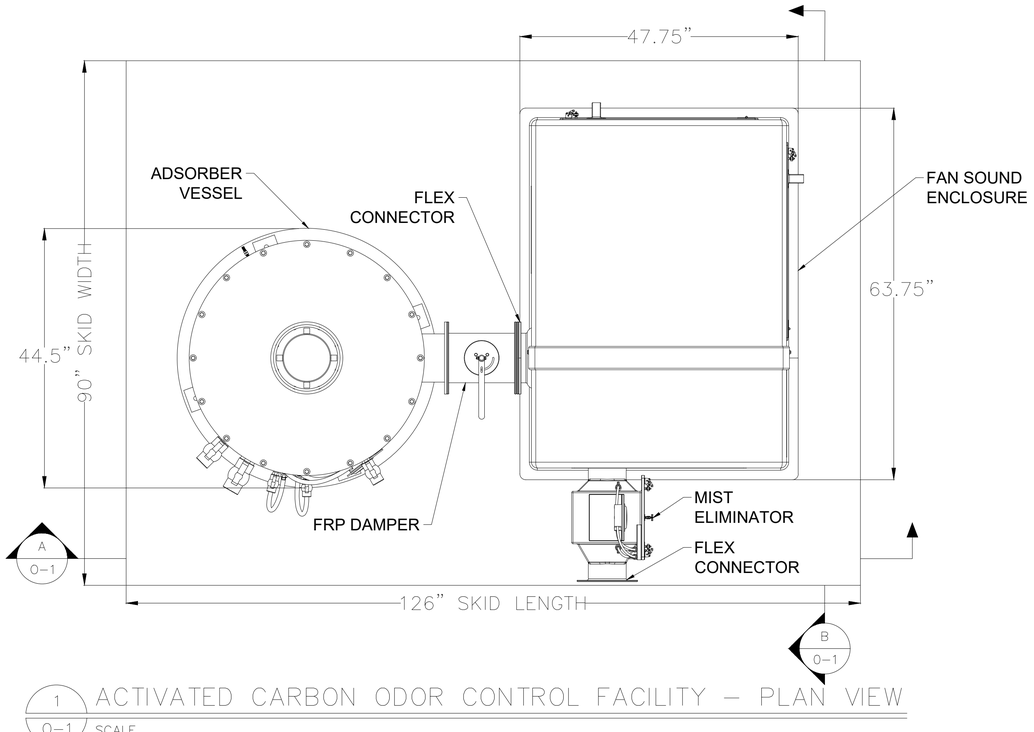

1 / O-1 ACTIVATED CARBON ODOR CONTROL FACILITY – PLAN VIEW

SCALE

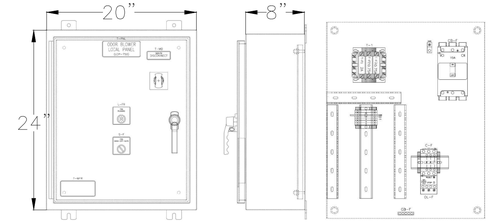

NOTE: PANEL SHALL BE SUPPLIED, LOCATED, AND INSTALLED MINIMUM THREE FEET AWAY FROM BLOWER, OR ODOR CONTROL VESSEL.

2 / O-1 ACTIVATED CARBON CONTROL PANEL

NTS

NOTES:

1. SKID IS 10'–6" LONG BY 7'–6" WIDE. THE SKID AREA CONTAINS THE ACTIVATED CARBON ODOR CONTROL FACILITY.
2. DRAIN PORT TO BE CONNECTED TO DRAIN TO SEWER WITH 6" TRAP AS SHOWN ON SITE PLAN

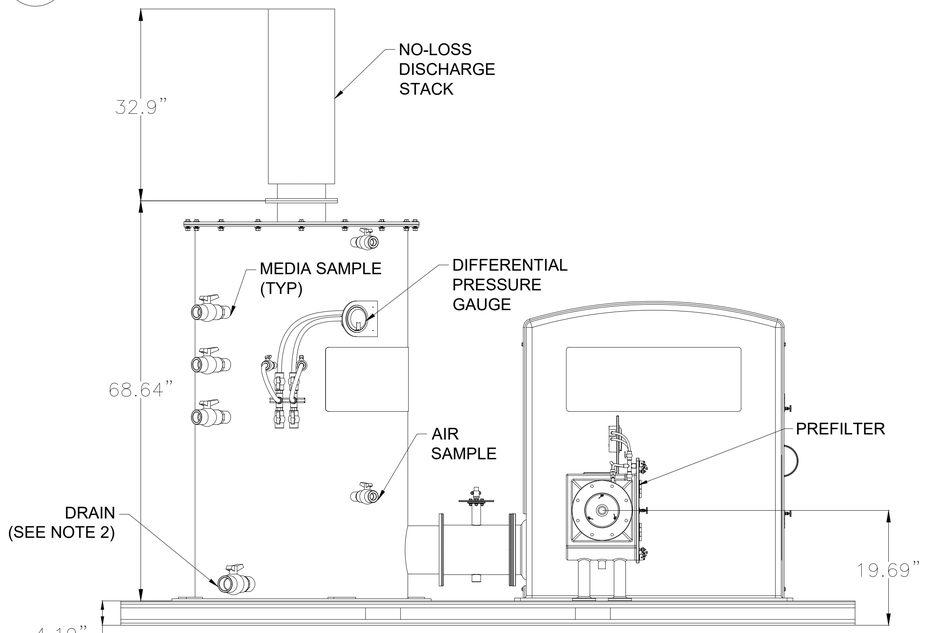

A / O-1 ACTIVATED CARBON ODOR CONTROL FACILITY – SECTION VIEW

SCALE

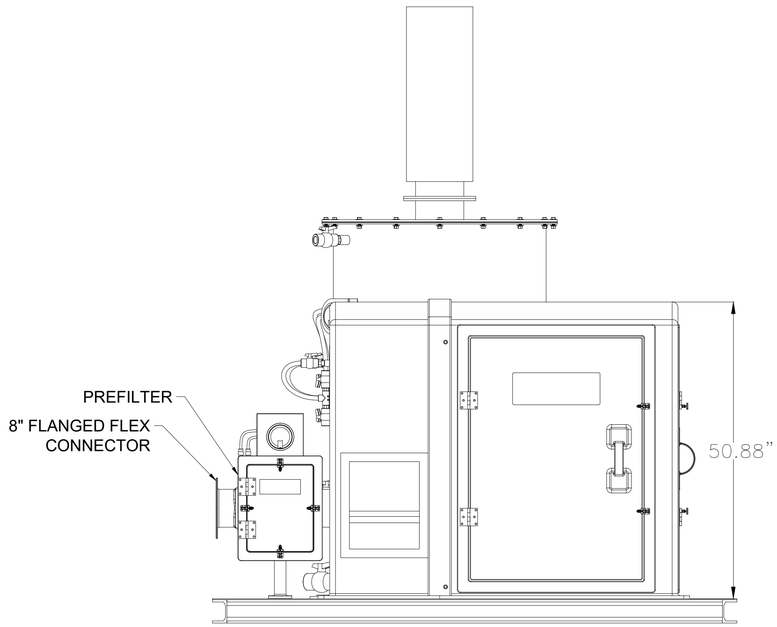

B / O-1 ACTIVATED CARBON ODOR CONTROL FACILITY – SECTION VIEW

SCALE

0' 1' 2' 3'

1" = 1'-0" (FULL)

NO.	DATE	REVISION	APP.

PAPE–DAWSON

2107 CITYWEST BLVD, 3RD FLR I HOUSTON, TX 77042 I 713.428.2400

TEXAS ENGINEERING FIRM #470 I TEXAS SURVEYING FIRM #10028800

V&A Consulting Engineers, Inc.
15720 Park Row, Suite 500
Houston, TX 77084 Tel. (713) 568-9067
F-9154
V&A Project No.: 22-0426

INTERIM REVIEW ONLY
Document incomplete; not intended for regulatory approval, permit, or construction.
JAMES VAUGHAN HARSHMAN
Engineer
153247
Registered Number
09/02/2025
Date

SURVEYED BY:
PAPE–DAWSON ENGINEERS
FB NO. 24–018

V&A CONSULTING ENGINEERS, INC.
Texas Registered Engineering Firm
F–9154

CITY OF HOUSTON
HOUSTON PUBLIC WORKS

LIFT STATION REHABILITATION AND RECONSTRUCTION
BEN'S BRANCH, WOODLAND RIDGE, ELMWOOD HILLS, FOREST SHORES, TRAIL RIVER, RIVERLAWN

BEN'S BRANCH LIFT STATION ODOR CONTROL SYSTEM CARBON ADSORBER PLAN AND SECTION VIEW

WBS NUMBER	FOR CITY OF HOUSTON USE ONLY
R–000267–0180–3	
DRAWING SCALE	
AS NOTED	
CITY OF HOUSTON PM	
BRENDA JOHNSON P.E.	
SHEET NO. OF	

DWG No.
O-1

FILE PATH: E:\Projects\2022\0400 Thru 0499\22-0426 Var City Of Houston\500 Drawings\DESIGN\60%\60% Odor Sheets\04 Bens Branch\22-0426 Var City Of Houston Bens Branch Odor Control Detail.dwg

ODOR CONTROL SYSTEM ELECTRICAL CONTROL PANEL

LEGEND

- dP-X — Differential Pressure Gauge
- DV-XX — Manual Damper Butterfly Valve
- FC-XX — Flexible Duct Connection
- BV-XX — 2 Way Manual Ball Valve
- FXX_XXX — Flange Connection (size per chart)
- WL_XXX — Water Trap
- Drain

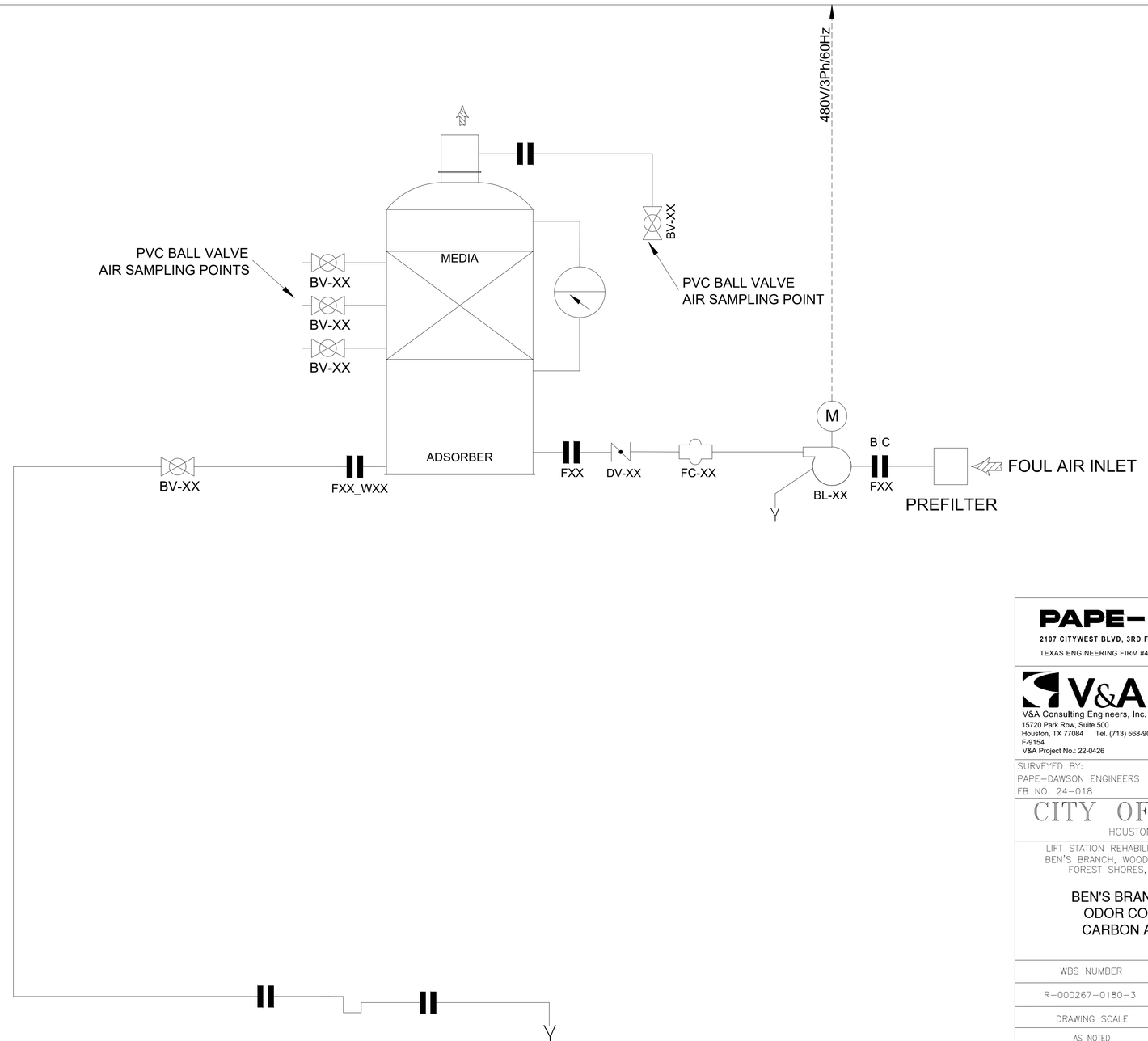

REVISION | NO. | DATE | APP.

PAPE-DAWSON
2107 CITYWEST BLVD, 3RD FLR I HOUSTON, TX 77042 I 713.428.2400
TEXAS ENGINEERING FIRM #470 I TEXAS SURVEYING FIRM #10028800

V&A Consulting Engineers, Inc.
15720 Park Row, Suite 500
Houston, TX 77084 Tel. (713) 568-9067
F-9154
V&A Project No.: 22-0426

INTERIM REVIEW ONLY
Document incomplete; not intended for regulatory approval, permit, or construction.
JAMES VAUGHAN HARSHMAN
Engineer
153247
Registration Number
09/02/2025
Date

SURVEYED BY:
PAPE-DAWSON ENGINEERS
FB NO. 24-018

V&A CONSULTING ENGINEERS, INC.
Texas Registered Engineering Firm
F-9154

CITY OF HOUSTON
HOUSTON PUBLIC WORKS

LIFT STATION REHABILITATION AND RECONSTRUCTION
BEN'S BRANCH, WOODLAND RIDGE, ELMWOOD HILLS, FOREST SHORES, TRAIL RIVER, RIVERLAWN

BEN'S BRANCH LIFT STATION
ODOR CONTROL SYSTEM
CARBON ADSORBER P&ID

WBS NUMBER	FOR CITY OF HOUSTON USE ONLY
R-000267-0180-3	
DRAWING SCALE	
AS NOTED	
CITY OF HOUSTON PM	
BRENDA JOHNSON P.E.	
SHEET NO. OF	

DWG No.
O-2

FILE PATH: E:\Projects\2022\0400 Thru 0499\22-0426 Var City Of Houston\500 Drawings\DESIGN\60%\60% Odor Sheets\04 Bens Branch\22-0426 Var City Of Houston Bens Branch Odor Control Detail.dwg

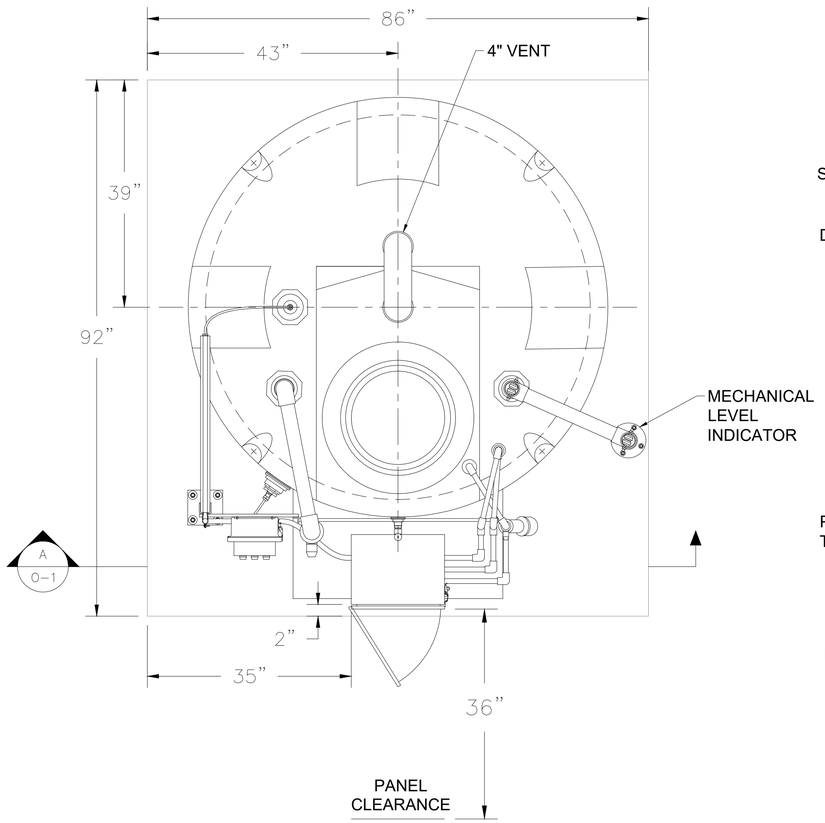

1 O-3 CHEMICAL FEED TANK – PLAN VIEW

SCALE

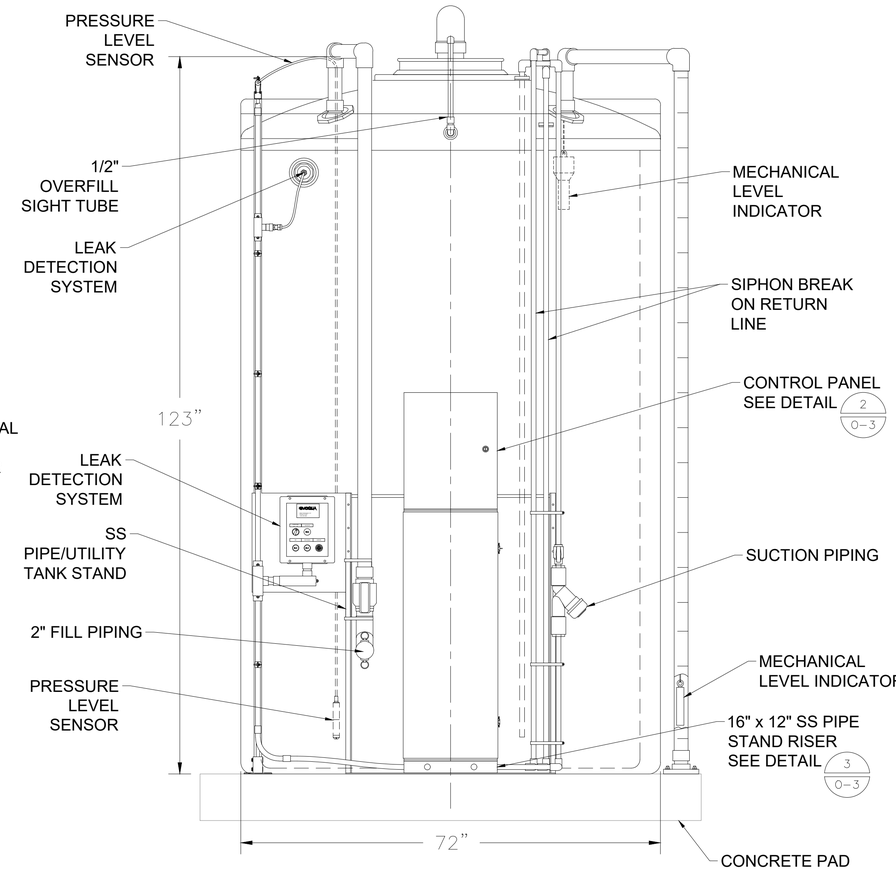

A O-3 CHEMICAL FEED TANK – SECTION VIEW

SCALE

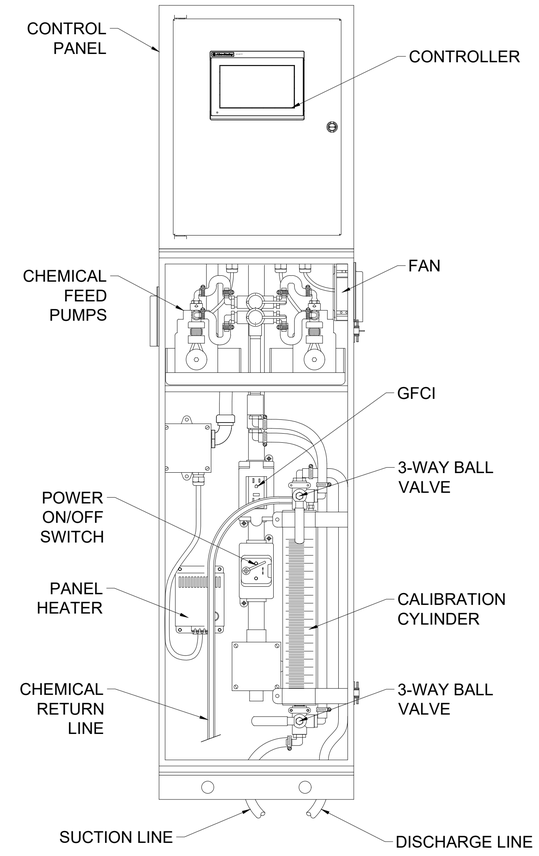

2 O-3 CHEMICAL FEED TANK CONTROL PANEL

NTS

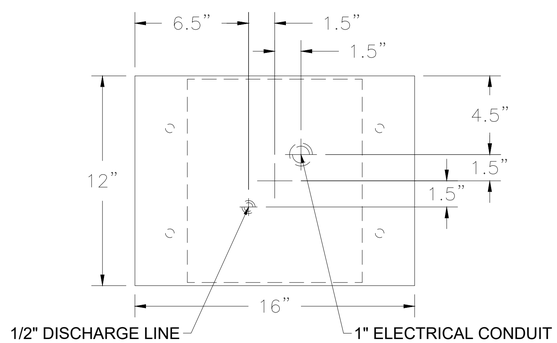

3 O-3 RISER/SLAB PENETRATION DETAIL

NTS

0' 1' 2' 3'

1" = 1'-0" (FULL)

NO.	DATE	REVISION	APP.

PAPE-DAWSON

2107 CITYWEST BLVD, 3RD FLR I HOUSTON, TX 77042 I 713.428.2400

TEXAS ENGINEERING FIRM #470 I TEXAS SURVEYING FIRM #10028800

V&A Consulting Engineers, Inc.
15720 Park Row, Suite 500
Houston, TX 77084 Tel. (713) 568-9067
F-9154
V&A Project No.: 22-0426

INTERIM REVIEW ONLY

Document incomplete: not intended for regulatory approval, permit, or construction.

JAMES VAUGHAN HARSHMAN
Engineer
15247
Registration Number
09/02/2025
Date

V&A CONSULTING ENGINEERS, INC.
Texas Registered Engineering Firm
F-9154

SURVEYED BY:
PAPE-DAWSON ENGINEERS
FB NO. 24-018

CITY OF HOUSTON
HOUSTON PUBLIC WORKS

LIFT STATION REHABILITATION AND RECONSTRUCTION
BEN'S BRANCH, WOODLAND RIDGE, ELMWOOD HILLS, FOREST SHORES, TRAIL RIVER, RIVERLAWN

BEN'S BRANCH LIFT STATION ODOR CONTROL SYSTEM CHEMICAL FEED

WBS NUMBER	FOR CITY OF HOUSTON USE ONLY
R-000267-0180-3	
DRAWING SCALE	
AS NOTED	
CITY OF HOUSTON PM	
BRENDA JOHNSON P.E.	
SHEET NO. OF	

DWG No. O-3

FILE PATH: E:\Projects\2022\0400 Thru 0499\22-0426 Var City Of Houston\500 Drawings\DESIGN\60%\60% Odor Sheets\04 Bens Branch\22-0426 Var City Of Houston Bens Branch Odor Control Detail.dwg

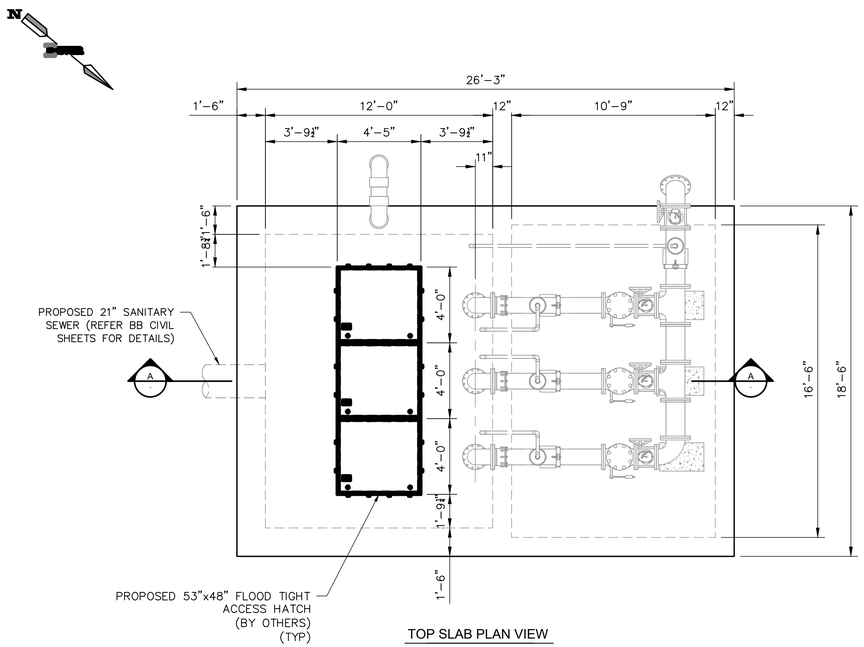

TOP SLAB PLAN VIEW

SCALE: 1/4" = 1'-0"

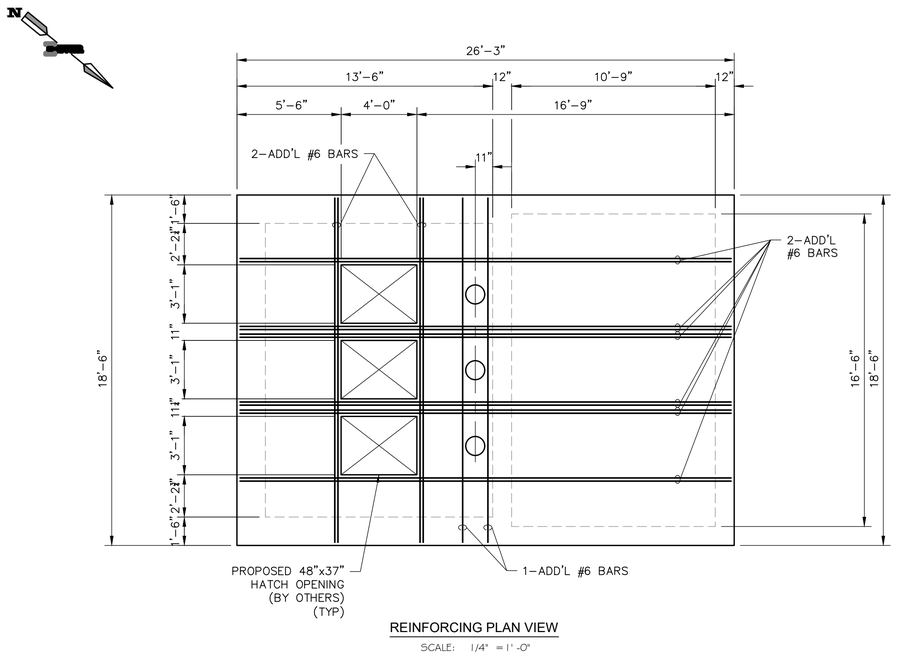

REINFORCING PLAN VIEW

SCALE: 1/4" = 1'-0"

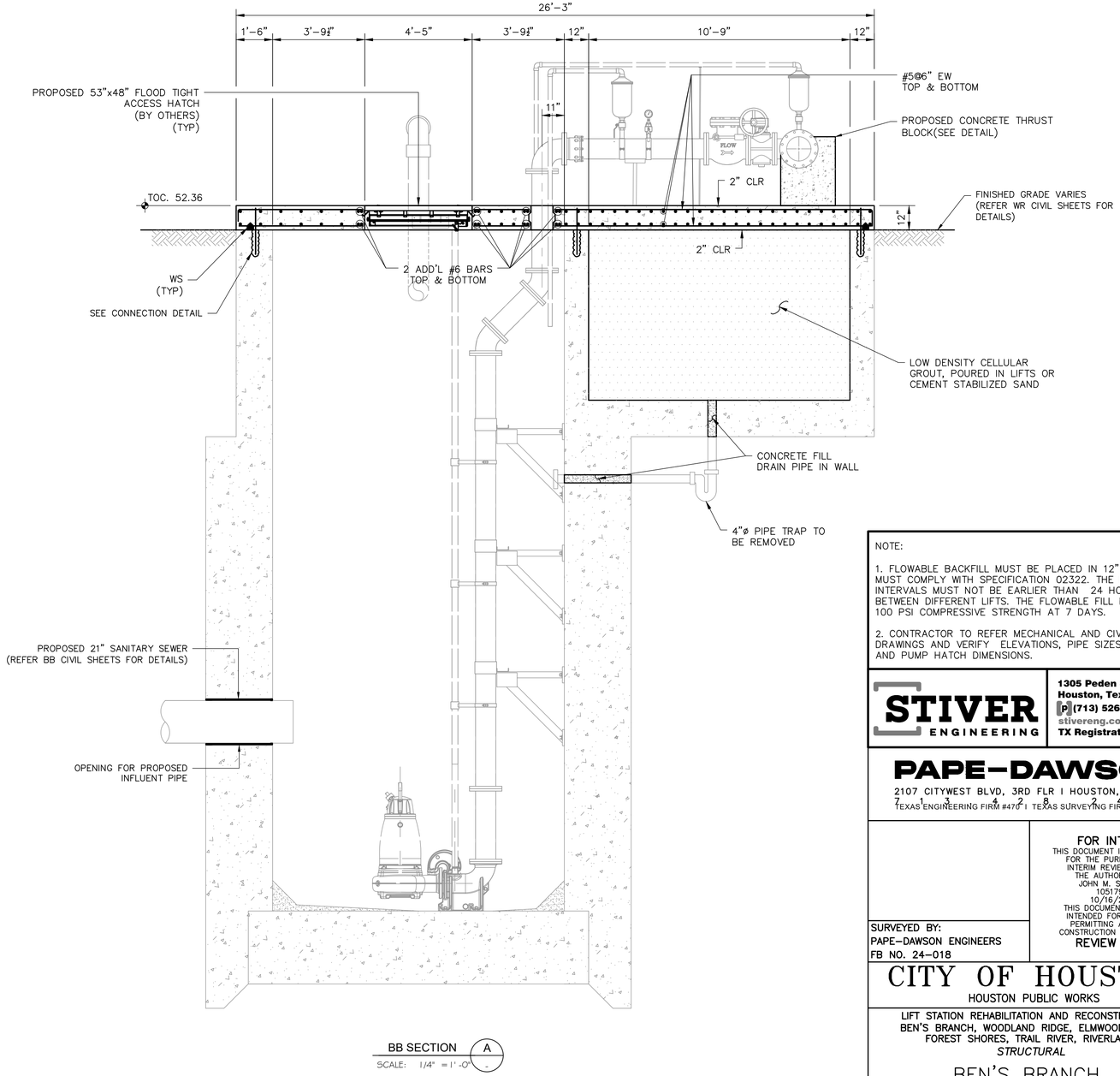

BB SECTION A

SCALE: 1/4" = 1'-0"

NOTE:

1. FLOWABLE BACKFILL MUST BE PLACED IN 12" LIFTS AND MUST COMPLY WITH SPECIFICATION 02322. THE PLACEMENT INTERVALS MUST NOT BE EARLIER THAN 24 HOURS BETWEEN DIFFERENT LIFTS. THE FLOWABLE FILL MUST HAVE 100 PSI COMPRESSIVE STRENGTH AT 7 DAYS.

2. CONTRACTOR TO REFER MECHANICAL AND CIVIL DRAWINGS AND VERIFY ELEVATIONS, PIPE SIZES, PUMP AND PUMP HATCH DIMENSIONS.

STIVER ENGINEERING

1305 Peden Street
Houston, Texas 77006
P (713) 526-3478
stivereng.com
TX Registration No. F-190

PAPE-DAWSON

2107 CITYWEST BLVD, 3RD FLR I HOUSTON, TX 77042 I 713.462.7420
TEXAS ENGINEERING FIRM #470 I TEXAS SURVEYING FIRM #10028800

FOR INTERIM

THIS DOCUMENT IS RELEASED FOR THE PURPOSE OF INTERIM REVIEW UNDER THE AUTHORITY OF JOHN M. STIVER 105179 10/16/25 THIS DOCUMENT IS NOT INTENDED FOR BIDDING, PERMITTING AND/OR CONSTRUCTION PURPOSES

REVIEW ONLY

SURVEYED BY:
PAPE-DAWSON ENGINEERS
FB NO. 24-018

CITY OF HOUSTON

HOUSTON PUBLIC WORKS

LIFT STATION REHABILITATION AND RECONSTRUCTION
BEN'S BRANCH, WOODLAND RIDGE, ELMWOOD HILLS, FOREST SHORES, TRAIL RIVER, RIVERLAWN
STRUCTURAL

BEN'S BRANCH
PLAN VIEW, SECTION A AND REINFORCING PLAN VIEW

WBS NUMBER	FOR CITY OF HOUSTON USE ONLY
R-000267-0180-3	
DRAWING SCALE	
CITY OF HOUSTON PM	
BRENDA JOHNSON P.E.	
SHEET NO. 116 OF	

BB-S-01

FILE PATH: F:\SE\PROJECTS\2023 Projects\23154.2-Pape-Dawson-Amir Shokouhi-COH LS Rehab For 6 Lift Stations Pkg 2-Phase II Design\CADD FILES\23154.2 CADD\Ben's Branch LS\23154.2_LIFT STATION_BEN'S BRANCH.dwg

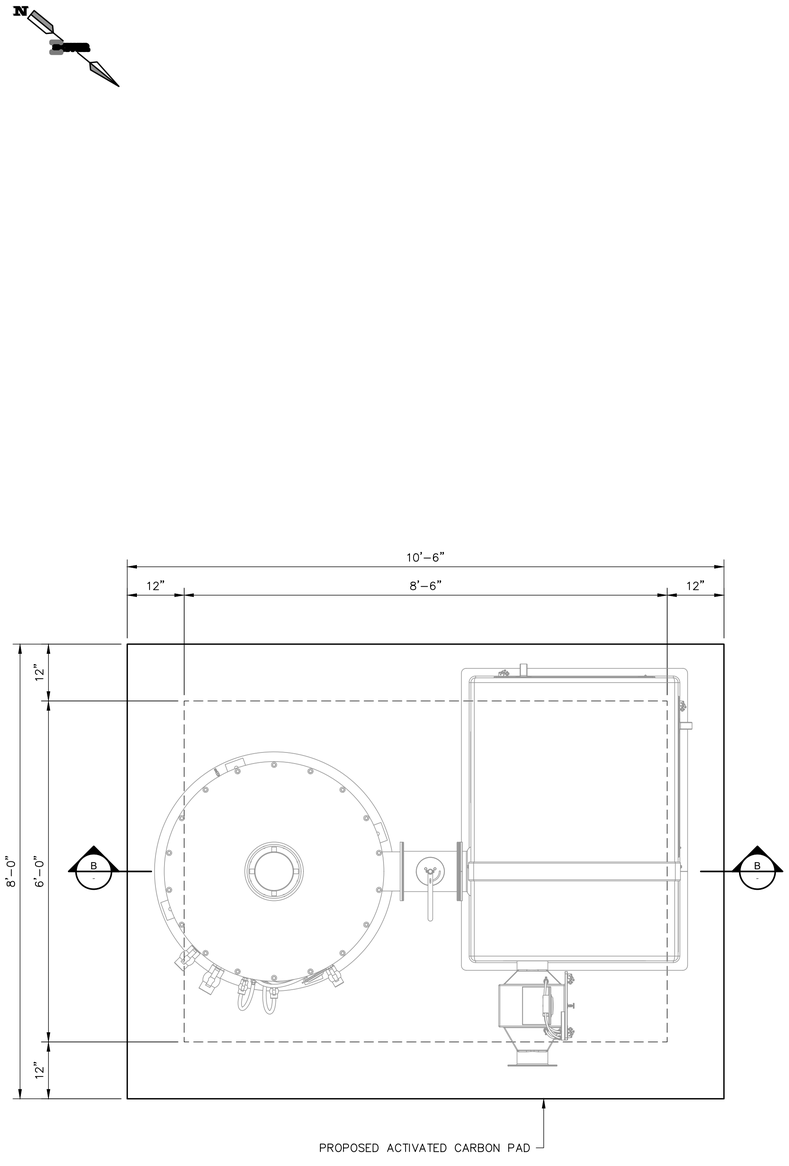

PLAN VIEW
SCALE: 3/4" = 1'-0"

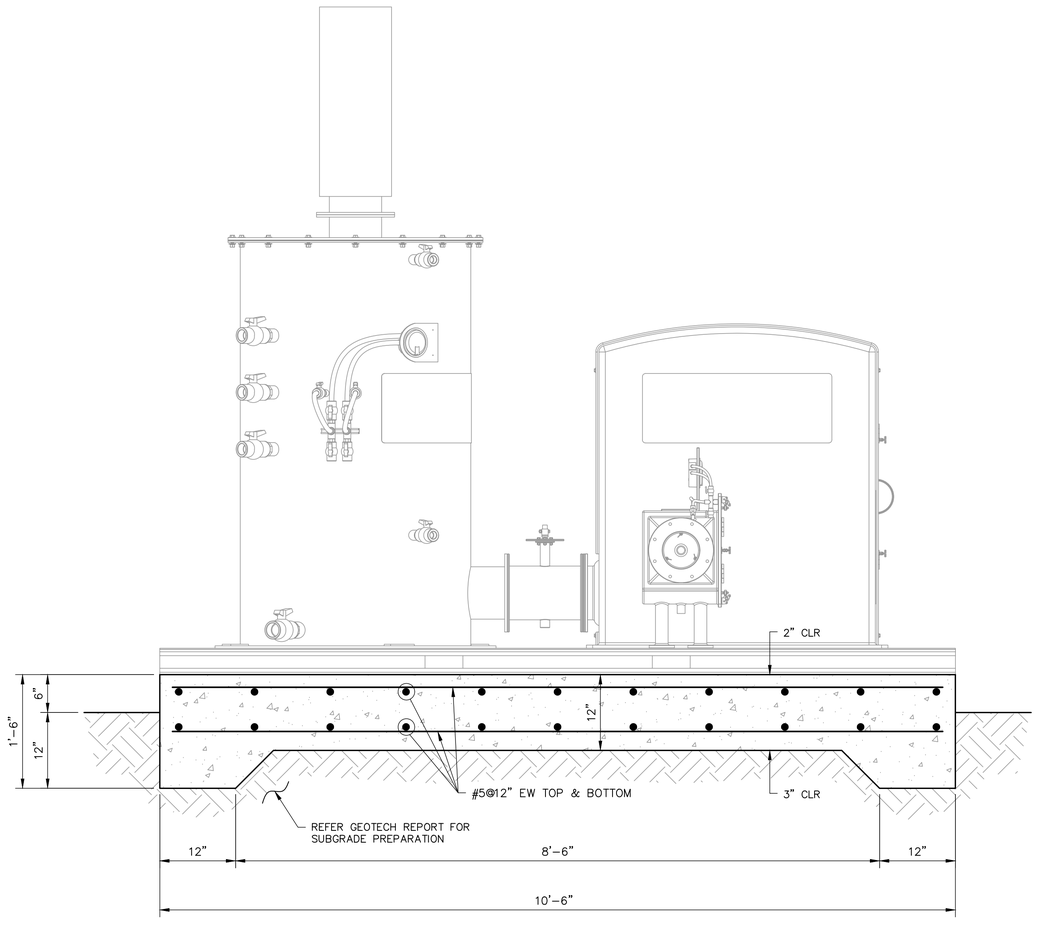

BB SECTION B
SCALE: 1" = 1'-0"

*PAD THICKNESS SUBJECT TO CHANGE, PENDING ANCHORAGE VERIFICATION.

STIVER ENGINEERING
1305 Peden Street
Houston, Texas 77006
P (713) 526-3478
stivereng.com
TX Registration No. F-190

PAPE-DAWSON
2107 CITYWEST BLVD, 3RD FLR I HOUSTON, TX 77042 I 713 284 2400
TEXAS ENGINEERING FIRM #470 I TEXAS SURVEYING FIRM #10028800

FOR INTERIM
THIS DOCUMENT IS RELEASED FOR THE PURPOSE OF INTERIM REVIEW UNDER THE AUTHORITY OF JOHN M. STIVER 105179 10/16/25
THIS DOCUMENT IS NOT INTENDED FOR BIDDING, PERMITTING AND/OR CONSTRUCTION PURPOSES
REVIEW ONLY

SURVEYED BY:
PAPE-DAWSON ENGINEERS
FB NO. 24-018

CITY OF HOUSTON
HOUSTON PUBLIC WORKS

LIFT STATION REHABILITATION AND RECONSTRUCTION
BEN'S BRANCH, WOODLAND RIDGE, ELMWOOD HILLS, FOREST SHORES, TRAIL RIVER, RIVERLAWN
STRUCTURAL

BEN'S BRANCH
ODOR CONTROL PAD
PLAN VIEW AND SECTION B

WBS NUMBER	FOR CITY OF HOUSTON USE ONLY
R-000267-0180-3	
DRAWING SCALE	
CITY OF HOUSTON PM	
BRENDA JOHNSON P.E.	
SHEET NO. 117 OF	

BB-S-02

FILE PATH: F:\SE\PROJECTS\2023 Projects\23154.2-Pape-Dawson-Amir Shokouhi-COH LS Rehab For 6 Lift Stations Pkg 2-Phase II Design\CADD FILES\23154.2 CADD\Ben's Branch LS\23154.2_LIFT STATION_BEN'S BRANCH.dwg

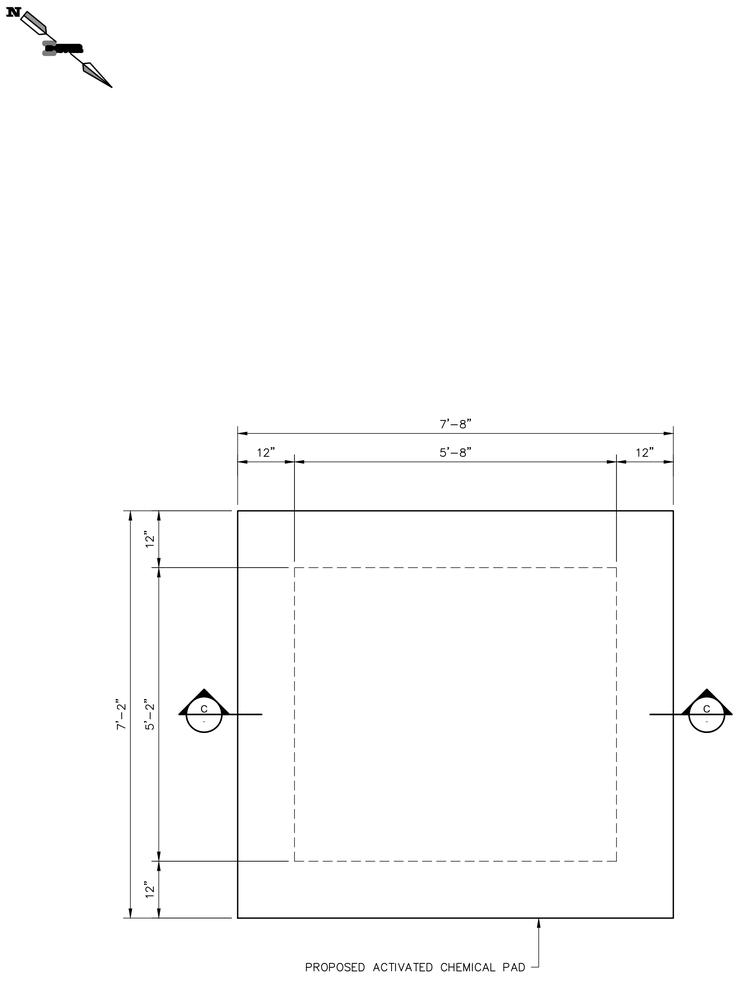

PLAN VIEW

SCALE: 3/4" = 1'-0"

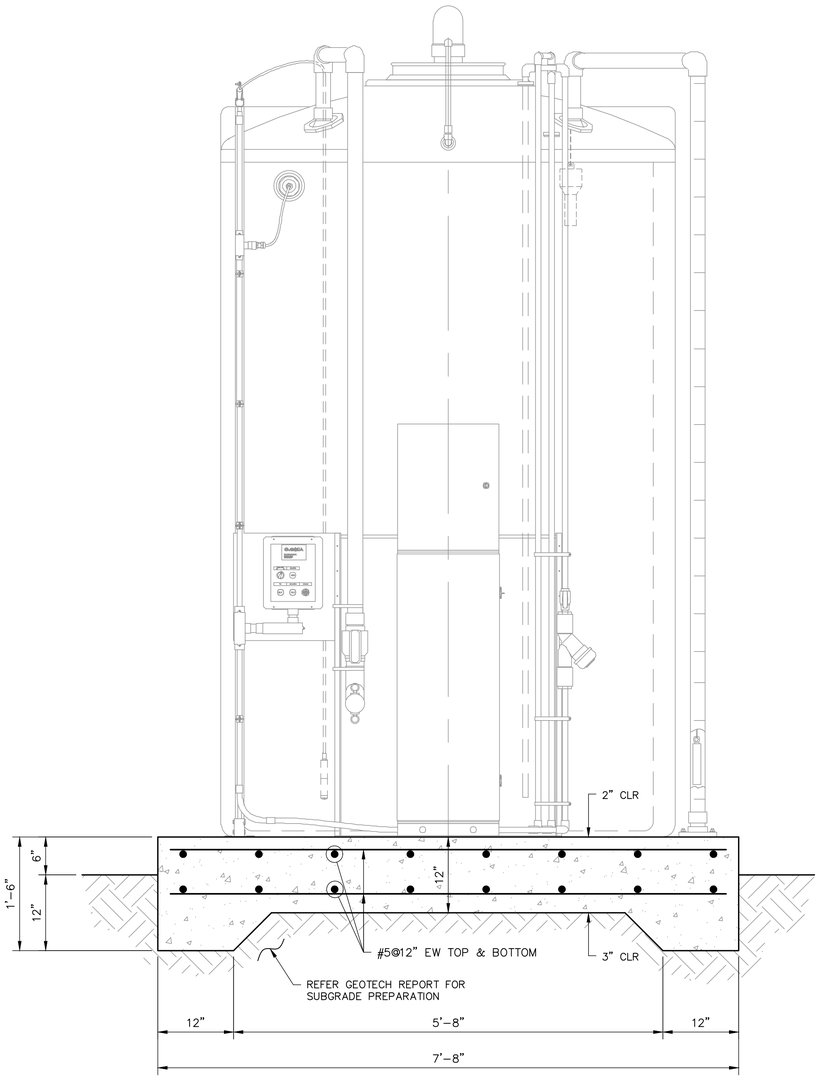

BB SECTION C

SCALE: 1" = 1'-0"

*PAD THICKNESS SUBJECT TO CHANGE, PENDING ANCHORAGE VERIFICATION.

STIVER ENGINEERING

1305 Peden Street
Houston, Texas 77006
P (713) 526-3478
stivereng.com
TX Registration No. F-190

PAPE-DAWSON

2107 CITYWEST BLVD, 3RD FLR I HOUSTON, TX 77042 I
7 1 3 4 2 8 2 4 0 0
TEXAS ENGINEERING FIRM #470 I TEXAS SURVEYING FIRM #10028800

FOR INTERIM

THIS DOCUMENT IS RELEASED FOR THE PURPOSE OF INTERIM REVIEW UNDER THE AUTHORITY OF JOHN M. STIVER 105179 10/16/25 THIS DOCUMENT IS NOT INTENDED FOR BIDDING, PERMITTING AND/OR CONSTRUCTION PURPOSES

REVIEW ONLY

SURVEYED BY:
PAPE-DAWSON ENGINEERS
FB NO. 24-018

CITY OF HOUSTON

HOUSTON PUBLIC WORKS

LIFT STATION REHABILITATION AND RECONSTRUCTION
BEN'S BRANCH, WOODLAND RIDGE, ELMWOOD HILLS,
FOREST SHORES, TRAIL RIVER, RIVERLAWN
STRUCTURAL

BEN'S BRANCH
CHEMICAL INJECTION PAD
PLAN VIEW AND SECTION C

WBS NUMBER	FOR CITY OF HOUSTON USE ONLY
R-000267-0180-3	
DRAWING SCALE	
CITY OF HOUSTON PM	
BRENDA JOHNSON P.E.	
SHEET NO. 118 OF	

BB-S-03

FILE PATH: F:\SE\PROJECTS\2023 Projects\23154.2-Pape-Dawson-Amir Shokouhi-COH LS Rehab For 6 Lift Stations Pkg 2-Phase II Design\CADD FILES\23154.2 CADD\Ben's Branch LS\23154.2_LIFT STATION_BEN'S BRANCH.dwg

BEN'S BRANCH ELECTRICAL
DEMOLITION SITE

PLAN

1"= 5'-0"

NOTES BY SYMBOL "⬡#":

⬡1 EXISTING OUTDOOR MCC, CONTROL PANEL, AND ASSOCIATED CONDUITS TO BE DEMOLISHED AND REMOVED.

SCALE: 1"= 5'

0' 5' 10' 15'

NO.	DATE	REVISION	APP.

NOTICE:
FOR YOUR SAFETY, YOU ARE REQUIRED BY TEXAS LAW TO CALL 811 AT LEAST 48 HOURS BEFORE YOU DIG SO THAT UNDERGROUND LINES CAN BE MARKED. THIS SIGNATURE DOES NOT FULFILL YOUR OBLIGATION TO CALL 811

VERIFICATION OF PRIVATE UTILITY LINES

Date

CenterPoint Energy natural gas utilities shown. (Gas service lines are not shown). This signature not be used for conflict verification.

Signature valid for six months.

Date

CenterPoint Energy/UNDERGROUND Electrical Facilities Verification ONLY. (This signature verifies existing underground facilities – not to be used for conflict verification)

Signature valid for six months.

Date

Approved for AT&T underground conduit facilities only.
Signature valid for one year.

PAPE–DAWSON
2107 CITYWEST BLVD, 3RD FLR I HOUSTON, TX 77042 I 713.428.2400
TEXAS ENGINEERING FIRM #470 I TEXAS SURVEYING FIRM #10028800

GAI
Gupta & Associates, Inc.
CONSULTING ENGINEERING
Registration No. F-2593
302 Dennis St.
Houston, Texas 77006
Tel: 713-636-2936
Fax: 713-636-2987
email: hforouzan@gaiconsulting.com

SURVEYED BY:
PAPE–DAWSON ENGINEERS
FB NO. 24–018

THIS DOCUMENT IS RELEASED FOR INTERIM REVIEW UNDER THE AUTHORIZATION OF HOSS FOROUZAN, P.E. (#77748) AND IS **NOT TO BE USED FOR CONSTRUCTION.**

CITY OF HOUSTON
HOUSTON PUBLIC WORKS

LIFT STATION REHABILITATION AND RECONSTRUCTION
BEN'S BRANCH, WOODLAND RIDGE, ELMWOOD HILLS, FOREST SHORES, TRAIL RIVER, RIVERLAWN

ELECTRICAL

BEN'S BRANCH LIFT STATION ELECTRICAL DEMOLITION SITE PLAN

WBS NUMBER	FOR CITY OF HOUSTON USE ONLY
R–000267–0180–3	
DRAWING SCALE	
AS NOTED	
CITY OF HOUSTON PM	
BRENDA JOHNSON P.E.	
SHEET NO. XX OF XX	

BB–E–01

FILE PATH: O:\H8107_Lift Station Rehabilitation And Reconstruction (Pape Dawson)\6 Drawings\Electrical\Working\Ben's Branch\H8107_BB–E–01.dwg

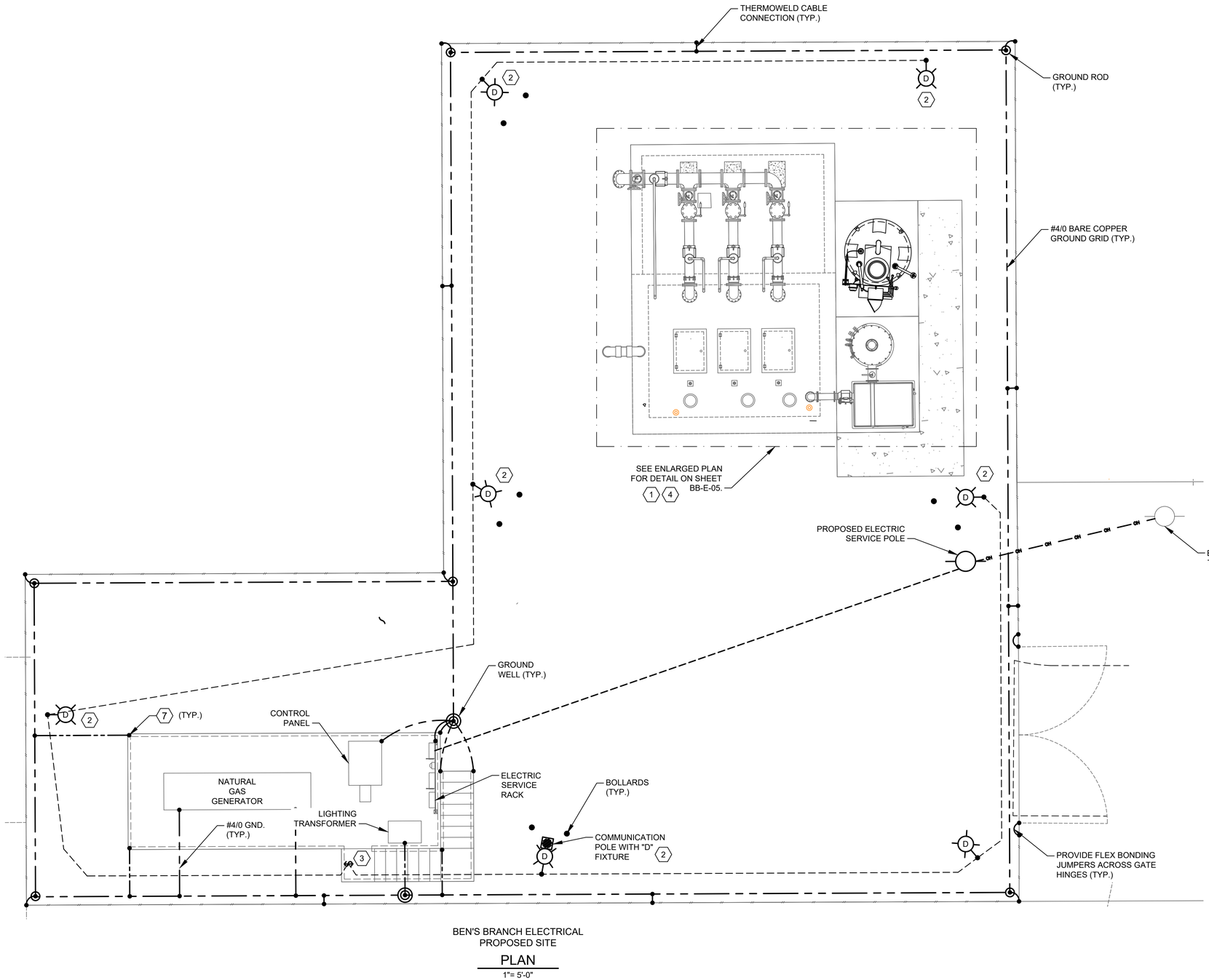

BEN'S BRANCH ELECTRICAL
PROPOSED SITE

PLAN

1"= 5'-0"

NOTES BY SYMBOL "#":

1. THE ELECTRICAL INSTALLATION IN THE WET WELL SHALL BE EXPLOSION PROOF, IN ACCORDANCE WITH THE NATIONAL ELECTRICAL CODE FOR CLASS I, DIVISION 1 LOCATIONS.
2. YARD LIGHT CONTROLLED BY LIGHTING SWITCH.
3. LIGHT SWITCH FOR YARD LIGHT CONTROL.
4. INSIDE WETWELL RATED NEMA CLASS 1, DIV. 1, OUTSIDE ABOVE GROUND, AROUND WETWELL RATED CLASS 1, DIV. 2 ACCORDING TO NFPA 820.
5. GROUNDING LOOP SHALL BE BURIED 30" BELOW FINISHED GRADE.
6. #4/0 BARE COPPER GROUND TO BE BONDED TO HANDRAIL.
7. #4/0 BARE COPPER GROUND TO BE BONDED TO PLATFORM STRUCTURAL STEEL.

SCALE: 1"= 5'

0' 5' 10' 15'

NO.	DATE	REVISION	APP.

NOTICE:
FOR YOUR SAFETY, YOU ARE REQUIRED BY TEXAS LAW TO CALL 811 AT LEAST 48 HOURS BEFORE YOU DIG SO THAT UNDERGROUND LINES CAN BE MARKED. THIS SIGNATURE DOES NOT FULFILL YOUR OBLIGATION TO CALL 811

VERIFICATION OF PRIVATE UTILITY LINES

Date

CenterPoint Energy natural gas utilities shown. (Gas service lines are not shown). This signature not be used for conflict verification.

Signature valid for six months.

Date

CenterPoint Energy/UNDERGROUND Electrical Facilities Verification ONLY. (This signature verifies existing underground facilities – not to be used for conflict verification)

Signature valid for six months.

Date

Approved for AT&T underground conduit facilities only.
Signature valid for one year.

PAPE–DAWSON
2107 CITYWEST BLVD, 3RD FLR I HOUSTON, TX 77042 I 713.428.2400
TEXAS ENGINEERING FIRM #470 I TEXAS SURVEYING FIRM #10028800

GAI
Gupta & Associates, Inc.
CONSULTING ENGINEERING
Registration No. F-2593
302 Dennis St.
Houston, Texas 77006
Tel: 713-636-2936
Fax: 713-636-2987
email: hforouzan@gaiconsulting.com

SURVEYED BY:
PAPE–DAWSON ENGINEERS
FB NO. 24–018

THIS DOCUMENT IS RELEASED FOR INTERIM REVIEW UNDER THE AUTHORIZATION OF HOSS FOROUZAN, P.E. (#77748) AND IS **NOT TO BE USED FOR CONSTRUCTION.**

CITY OF HOUSTON
HOUSTON PUBLIC WORKS

LIFT STATION REHABILITATION AND RECONSTRUCTION
BEN'S BRANCH, WOODLAND RIDGE, ELMWOOD HILLS, FOREST SHORES, TRAIL RIVER, RIVERLAWN

ELECTRICAL

BEN'S BRANCH LIFT STATION ELECTRICAL PROPOSED SITE PLAN

WBS NUMBER	FOR CITY OF HOUSTON USE ONLY
R–000267–0180–3	
DRAWING SCALE	
AS NOTED	
CITY OF HOUSTON PM	
BRENDA JOHNSON P.E.	
SHEET NO. XX OF XX	

BB–E–02

FILE PATH: O:\H8107_Lift Station Rehabilitation And Reconstruction (Pape Dawson)\6 Drawings\Electrical\Working\Ben's Branch\H8107_BB–E–02.dwg

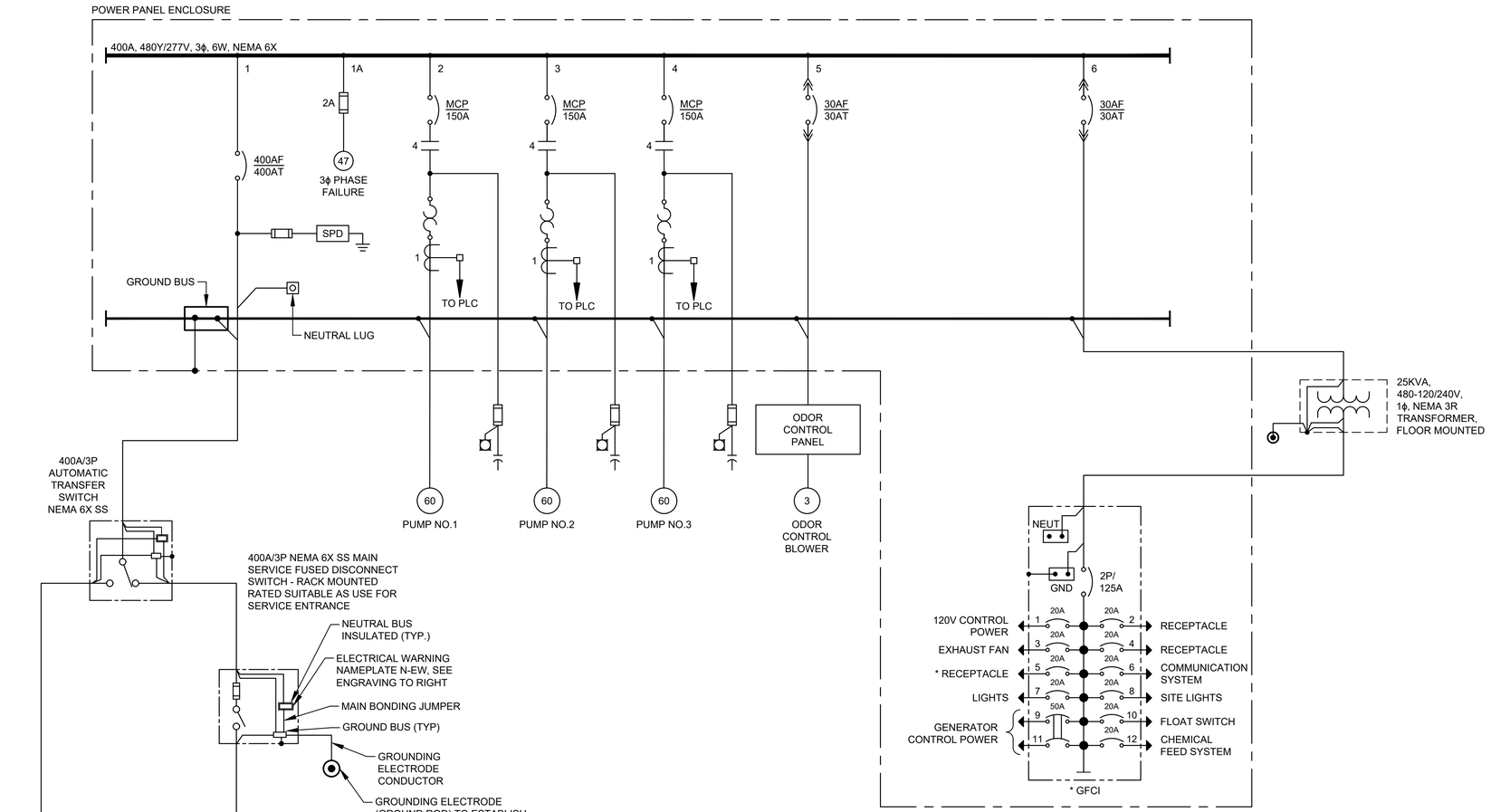

LOAD CALCULATION					
ITEM	DESCRIPTION	HP	FLA*	NORM. (KVA)	GEN. (KVA)
1	PUMP NO. 1	60 HP	77 A	64 KVA	64 KVA
2	PUMP NO. 2	60 HP	77 A	64 KVA	64 KVA
3	PUMP NO. 3 (STANDBY)	60 HP	77 A	64 KVA	-- KVA
4	ODOR CONTROL	-- HP	15 A	12.5 KVA	12.5 KVA
5	25 KVA TRANSFORMER		52.1 A	25 KVA	25 KVA
SUBTOTAL			298.1 A	229.5 KVA	165.5 KVA
25% OF LARGEST MOTOR LOAD			19.3 A		
MINIMUM AMPACITY @480V,3ϕ			317.4 A		

* BASED ON SELECTED PUMP MFG DATA

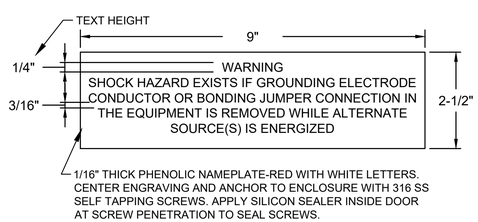

1/16" THICK PHENOLIC NAMEPLATE-RED WITH WHITE LETTERS. CENTER ENGRAVING AND ANCHOR TO ENCLOSURE WITH 316 SS SELF TAPPING SCREWS. APPLY SILICON SEALER INSIDE DOOR AT SCREW PENETRATION TO SEAL SCREWS.

ELECTRICAL WARNING NAMEPLATE N-EW ENGRAVING

NO.	DATE	REVISION	APP.

NOTICE:
FOR YOUR SAFETY, YOU ARE REQUIRED BY TEXAS LAW TO CALL 811 AT LEAST 48 HOURS BEFORE YOU DIG SO THAT UNDERGROUND LINES CAN BE MARKED. THIS SIGNATURE DOES NOT FULFILL YOUR OBLIGATION TO CALL 811

VERIFICATION OF PRIVATE UTILITY LINES

Date

CenterPoint Energy natural gas utilities shown. (Gas service lines are not shown). This signature not be used for conflict verification.

Signature valid for six months.

Date

CenterPoint Energy/UNDERGROUND Electrical Facilities Verification ONLY. (This signature verifies existing underground facilities – not to be used for conflict verification)

Signature valid for six months.

Date

Approved for AT&T underground conduit facilities only.
Signature valid for one year.

PAPE–DAWSON
2107 CITYWEST BLVD, 3RD FLR I HOUSTON, TX 77042 I 713.428.2400
TEXAS ENGINEERING FIRM #470 I TEXAS SURVEYING FIRM #10028800

GAI
Gupta & Associates, Inc.
CONSULTING ENGINEERING
Registration No. F-2593
302 Dennis St.
Houston, Texas 77006
Tel: 713-636-2936
Fax: 713-636-2987
email: hforouzan@gaiconsulting.com

THIS DOCUMENT IS RELEASED FOR INTERIM REVIEW UNDER THE AUTHORIZATION OF HOSS FOROUZAN, P.E. (#77748) AND IS **NOT TO BE USED FOR CONSTRUCTION.**

SURVEYED BY:
PAPE–DAWSON ENGINEERS
FB NO. 24–018

CITY OF HOUSTON
HOUSTON PUBLIC WORKS

LIFT STATION REHABILITATION AND RECONSTRUCTION
BEN'S BRANCH, WOODLAND RIDGE, ELMWOOD HILLS, FOREST SHORES, TRAIL RIVER, RIVERLAWN

ELECTRICAL

BEN'S BRANCH LIFT STATION ELECTRICAL ONE–LINE DIAGRAM

WBS NUMBER	FOR CITY OF HOUSTON USE ONLY
R–000267–0180–3	
DRAWING SCALE	
AS NOTED	
CITY OF HOUSTON PM	
BRENDA JOHNSON P.E.	
SHEET NO. XX OF XX	

BB–E–03

FILE PATH: O:\H8107_Lift Station Rehabilitation And Reconstruction (Pape Dawson)\6 Drawings\Electrical\Working\Ben's Branch\H8107_BB–E–03.dwg

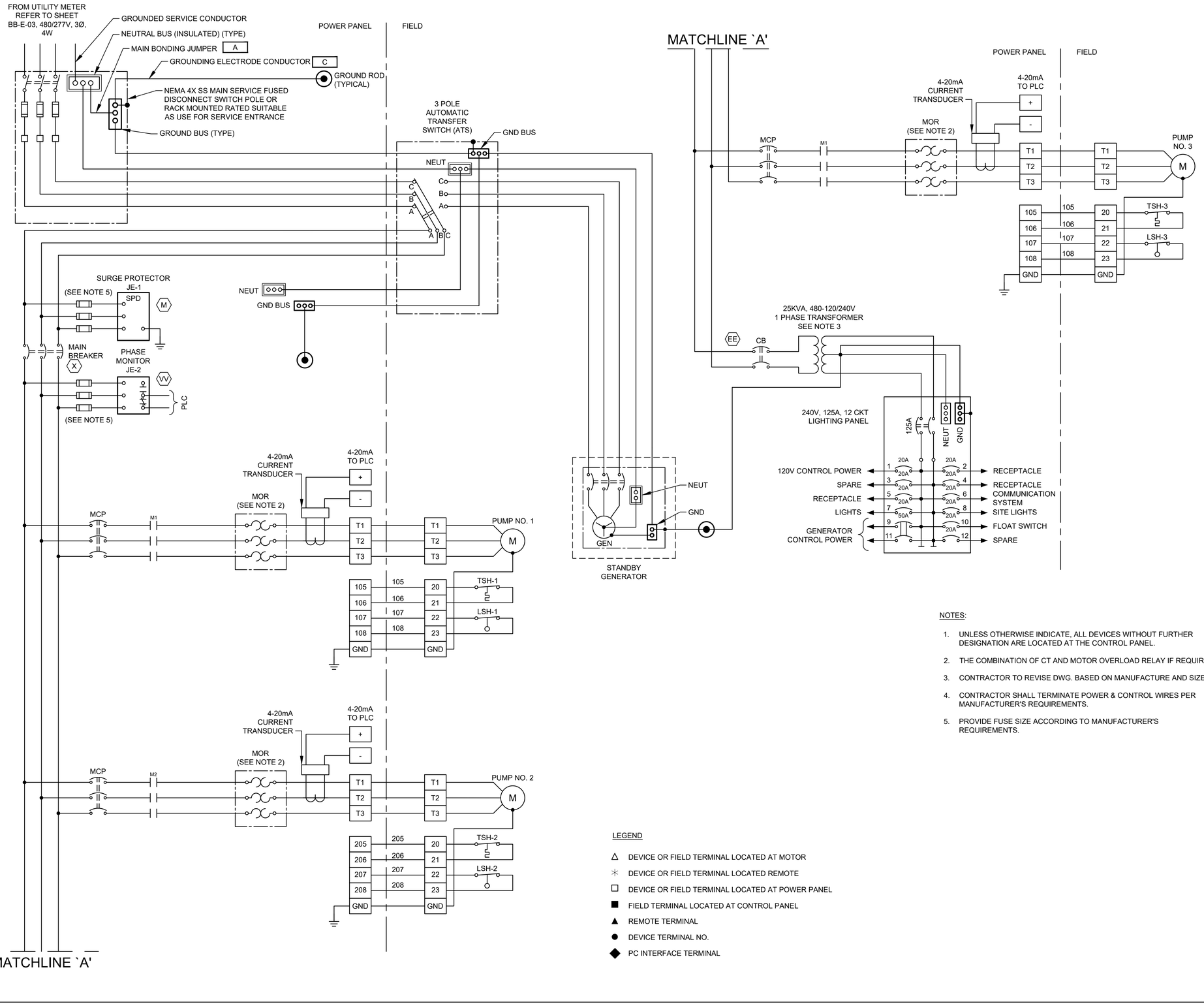

NOTES:

1. UNLESS OTHERWISE INDICATE, ALL DEVICES WITHOUT FURTHER DESIGNATION ARE LOCATED AT THE CONTROL PANEL.
2. THE COMBINATION OF CT AND MOTOR OVERLOAD RELAY IF REQUIRED.
3. CONTRACTOR TO REVISE DWG. BASED ON MANUFACTURE AND SIZE.
4. CONTRACTOR SHALL TERMINATE POWER & CONTROL WIRES PER MANUFACTURER'S REQUIREMENTS.
5. PROVIDE FUSE SIZE ACCORDING TO MANUFACTURER'S REQUIREMENTS.

LEGEND

- △ DEVICE OR FIELD TERMINAL LOCATED AT MOTOR
- ✳ DEVICE OR FIELD TERMINAL LOCATED REMOTE
- □ DEVICE OR FIELD TERMINAL LOCATED AT POWER PANEL
- ■ FIELD TERMINAL LOCATED AT CONTROL PANEL
- ▲ REMOTE TERMINAL
- ● DEVICE TERMINAL NO.
- ◆ PC INTERFACE TERMINAL

NO.	DATE	REVISION	APP.

NOTICE:
FOR YOUR SAFETY, YOU ARE REQUIRED BY TEXAS LAW TO CALL 811 AT LEAST 48 HOURS BEFORE YOU DIG SO THAT UNDERGROUND LINES CAN BE MARKED. THIS SIGNATURE DOES NOT FULFILL YOUR OBLIGATION TO CALL 811

VERIFICATION OF PRIVATE UTILITY LINES

Date

CenterPoint Energy natural gas utilities shown. (Gas service lines are not shown). This signature not be used for conflict verification.

Signature valid for six months.

Date

CenterPoint Energy/UNDERGROUND Electrical Facilities Verification ONLY. (This signature verifies existing underground facilities – not to be used for conflict verification)

Signature valid for six months.

Date

Approved for AT&T underground conduit facilities only.
Signature valid for one year.

PAPE–DAWSON
2107 CITYWEST BLVD, 3RD FLR I HOUSTON, TX 77042 I 713.428.2400
TEXAS ENGINEERING FIRM #470 I TEXAS SURVEYING FIRM #10028800

GAI
Gupta & Associates, Inc.
CONSULTING ENGINEERING
Registration No. F-2593
302 Dennis St.
Houston, Texas 77006
Tel: 713-636-2936
Fax: 713-636-2987
email: hforouzan@guiconsulting.com

SURVEYED BY:
PAPE–DAWSON ENGINEERS
FB NO. 24–018

THIS DOCUMENT IS RELEASED FOR INTERIM REVIEW UNDER THE AUTHORIZATION OF HOSS FOROUZAN, P.E. (#77748) AND IS **NOT TO BE USED FOR CONSTRUCTION.**

CITY OF HOUSTON
HOUSTON PUBLIC WORKS

LIFT STATION REHABILITATION AND RECONSTRUCTION
BEN'S BRANCH, WOODLAND RIDGE, ELMWOOD HILLS, FOREST SHORES, TRAIL RIVER, RIVERLAWN

ELECTRICAL

BEN'S BRANCH LIFT STATION ELECTRICAL THREE LINE DIAGRAM

WBS NUMBER	FOR CITY OF HOUSTON USE ONLY
R–000267–0180–3	
DRAWING SCALE	
AS NOTED	
CITY OF HOUSTON PM	
BRENDA JOHNSON P.E.	
SHEET NO. XX OF XX	

BB–E–04

FILE PATH: O:\H8107_Lift Station Rehabilitation And Reconstruction (Pape Dawson)\6 Drawings\Electrical\Working\Ben's Branch\H8107_BB-E-04.dwg

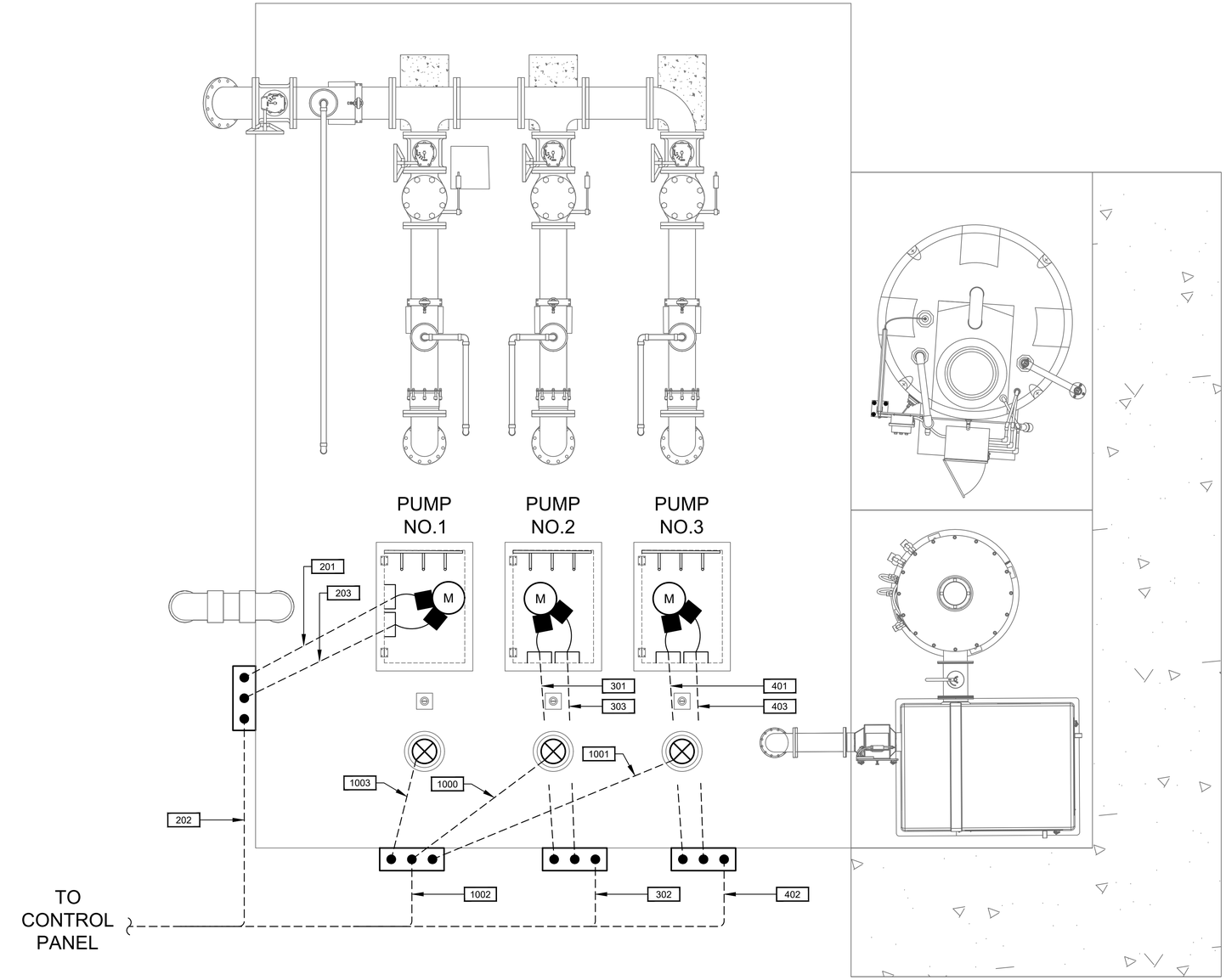

BEN'S BRANCH LIFT STATION
ENLARGED PLAN

PLAN

1/2"=1'-0"

NO.	DATE	REVISION	APP.

1 0 1 2 3

SCALE: 1/2" = 1'-0"

NOTICE:
FOR YOUR SAFETY, YOU ARE REQUIRED BY TEXAS LAW TO CALL 811 AT LEAST 48 HOURS BEFORE YOU DIG SO THAT UNDERGROUND LINES CAN BE MARKED. THIS SIGNATURE DOES NOT FULFILL YOUR OBLIGATION TO CALL 811

VERIFICATION OF PRIVATE UTILITY LINES

Date

CenterPoint Energy natural gas utilities shown. (Gas service lines are not shown). This signature not be used for conflict verification.

Signature valid for six months.

Date

CenterPoint Energy/UNDERGROUND Electrical Facilities Verification ONLY. (This signature verifies existing underground facilities – not to be used for conflict verification)

Signature valid for six months.

Date

Approved for AT&T underground conduit facilities only.
Signature valid for one year.

PAPE–DAWSON
2107 CITYWEST BLVD, 3RD FLR I HOUSTON, TX 77042 I 713.428.2400
TEXAS ENGINEERING FIRM #470 I TEXAS SURVEYING FIRM #10028800

GAI
Gupta & Associates, Inc.
CONSULTING ENGINEERING
Registration No. F-2593
302 Dennis St.
Houston, Texas 77006
Tel: 713-636-2936
Fax: 713-636-2987
email: hforouzan@gaiconsulting.com

SURVEYED BY:
PAPE–DAWSON ENGINEERS
FB NO. 24–018

THIS DOCUMENT IS RELEASED FOR INTERIM REVIEW UNDER THE AUTHORIZATION OF HOSS FOROUZAN, P.E. (#77748) AND IS **NOT TO BE USED FOR CONSTRUCTION.**

CITY OF HOUSTON
HOUSTON PUBLIC WORKS

LIFT STATION REHABILITATION AND RECONSTRUCTION
BEN'S BRANCH, WOODLAND RIDGE, ELMWOOD HILLS, FOREST SHORES, TRAIL RIVER, RIVERLAWN

ELECTRICAL

BEN'S BRANCH LIFT STATION ELECTRICAL ENLARGED LIFT STATION PLAN

WBS NUMBER	FOR CITY OF HOUSTON USE ONLY
R–000267–0180–3	
DRAWING SCALE	
AS NOTED	
CITY OF HOUSTON PM	
BRENDA JOHNSON P.E.	
SHEET NO. XX OF XX	

BB–E–05

FILE PATH: O:\H8107_Lift Station Rehabilitation And Reconstruction (Pape Dawson)\6 Drawings\Electrical\Working\Ben's Branch\H8107_BB–E–05.dwg

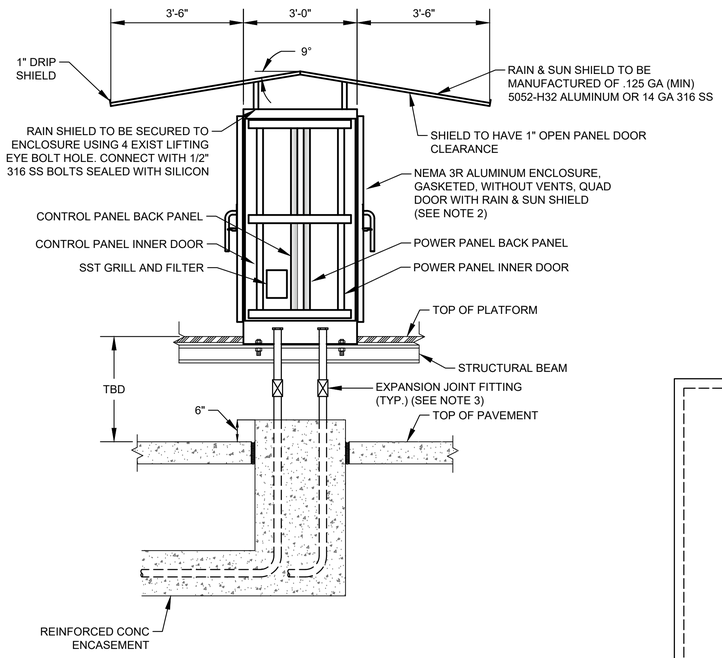

CONTROL CABINET ENCLOSURE WITH PLATFORM

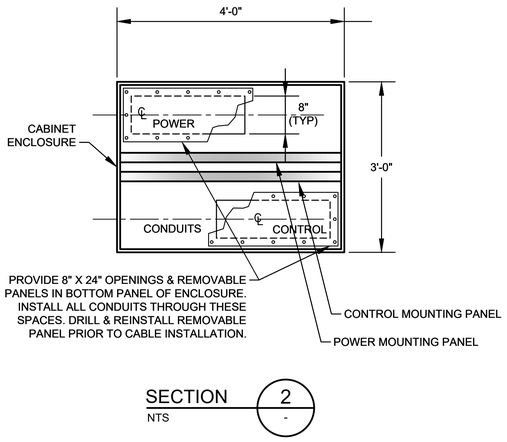

SECTION 2 / NTS

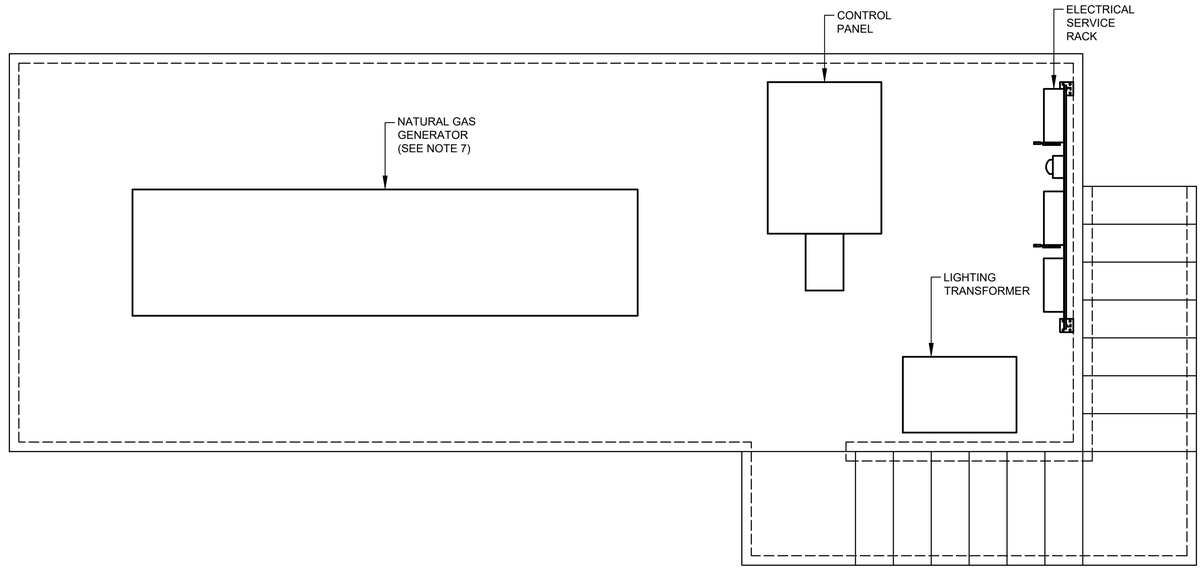

GENERATOR ON ELEVATED PLATFORM DETAIL

DETAIL 3 / 1/2" = 1'-0"

NOTES:

1. SEE SHEET BB-I-04 FOR EQUIPMENT SCHEDULE.
2. REFER TO SPEC 13325-8 FOR PANEL DIMENSIONS.
3. EXPANSION JOINT FITTINGS AS REQUIRED.
4. REFER TO SERVICE RACK FOR DETAIL.
5. REFER TO STRUCTURAL DRAWINGS .
6. CONDUIT TO BE MOUNTED BELOW PLATFORM GRATING.
7. GENERATOR IS FOR EMERGENCY USE ONLY.

NO.	DATE	REVISION	APP.

NOTICE:
FOR YOUR SAFETY, YOU ARE REQUIRED BY TEXAS LAW TO CALL 811 AT LEAST 48 HOURS BEFORE YOU DIG SO THAT UNDERGROUND LINES CAN BE MARKED. THIS SIGNATURE DOES NOT FULFILL YOUR OBLIGATION TO CALL 811

VERIFICATION OF PRIVATE UTILITY LINES

Date

CenterPoint Energy natural gas utilities shown. (Gas service lines are not shown). This signature not be used for conflict verification.

Signature valid for six months.

Date

CenterPoint Energy/UNDERGROUND Electrical Facilities Verification ONLY. (This signature verifies existing underground facilities – not to be used for conflict verification)

Signature valid for six months.

Date

Approved for AT&T underground conduit facilities only.
Signature valid for one year.

PAPE-DAWSON
2107 CITYWEST BLVD, 3RD FLR I HOUSTON, TX 77042 I 713.428.2400
TEXAS ENGINEERING FIRM #470 I TEXAS SURVEYING FIRM #10028800

GAI
Gupta & Associates, Inc.
CONSULTING ENGINEERING
Registration No. F-2593
302 Dennis St.
Houston, Texas 77006
Tel: 713-636-2936
Fax: 713-636-2987
email: hforouzan@gaiconsulting.com

THIS DOCUMENT IS RELEASED FOR INTERIM REVIEW UNDER THE AUTHORIZATION OF HOSS FOROUZAN, P.E. (#77748) AND IS **NOT TO BE USED FOR CONSTRUCTION.**

SURVEYED BY:
PAPE-DAWSON ENGINEERS
FB NO. 24-018

CITY OF HOUSTON
HOUSTON PUBLIC WORKS

LIFT STATION REHABILITATION AND RECONSTRUCTION
BEN'S BRANCH, WOODLAND RIDGE, ELMWOOD HILLS, FOREST SHORES, TRAIL RIVER, RIVERLAWN

ELECTRICAL

BEN'S BRANCH LIFT STATION CONTROL CABINET ENCLOSURE DETAIL

WBS NUMBER	FOR CITY OF HOUSTON USE ONLY
R-000267-0180-3	
DRAWING SCALE	
AS NOTED	
CITY OF HOUSTON PM	
BRENDA JOHNSON P.E.	
SHEET NO. XX OF XX	

BB-E-06

FILE PATH: O:\H8107_Lift Station Rehabilitation And Reconstruction (Pape Dawson)\6 Drawings\Electrical\Working\Ben's Branch\H8107_BB-E-06.dwg

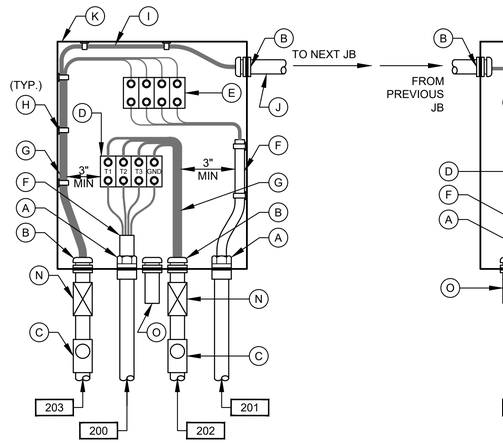

PUMP NO.1
JUNCTION BOX

DETAIL 3
NTS
(SEE NOTE 7)

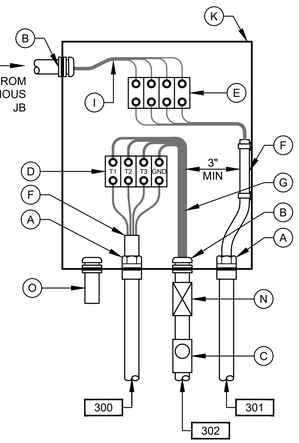

PUMP NO.2
JUNCTION BOX

DETAIL 4
NTS
(SEE NOTE 7)

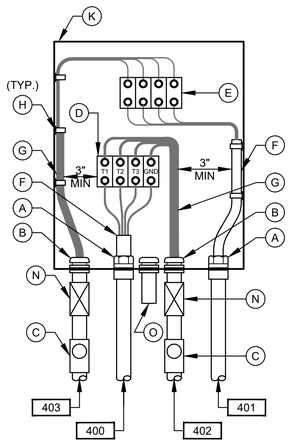

PUMP NO.3
JUNCTION BOX

DETAIL 5
NTS
(SEE NOTE 7)

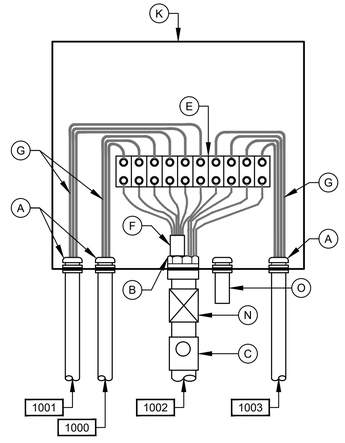

LEVEL TRANSMITTER
JUNCTION BOX

DETAIL 6
NTS
(SEE NOTE 7)

NOTES:

1. NAMEPLATES SHALL BE MOUNTED TO JUNCTION BOXES USING 316 STAINLESS STEEL HARDWARE.
2. MAINTAIN MINIMUM SEPARATION REQUIRED UNDER NEC ARTICLE 504, BETWEEN INTRINSICALLY SAFE CONTROL WIRING AND NON INTRINSICALLY SAFE MOTOR FEEDER WIRING.
3. UNLESS OTHERWISE NOTED, ALL EXTERIOR EXPOSED CONDUITS SHALL BE PVC COATED ALUMINUM.
4. UNLESS OTHERWISE NOTED, ALL NUTS, BOLTS, SCREWS WASHERS, ETC SHALL BE TYPE 316 STAINLESS STEEL.
5. ALL UNDERGROUND CONDUITS TO BE ENCASED IN REINFORCED CONCRETE DUCTBANK.
6. PROVIDE ANTI-CORROSIVE SPRAY ON ANY BARE METAL PARTS OR EXPOSED WIRE.
7. SEE WIRING SCHEMATICS FOR TERMINALS AND WIRE NUMBERS.
8. ANY CONDUIT REQUIRING A CSBE SEAL, SHALL BE A MINIMUM SIZE OF 2 1/2" PER CABLE.
9. DETAIL SHOWN MAY BE MODIFIED PER SITE SITUATION.
10. COORDINATE WITH WASTE WATER OPERATIONS ELECTRICAL ORGANIZATION FOR THE OPENING OF JUNCTION BOXES TO THE SIDE OF WET WELL IF REQUIRED DURING CONSTRUCTION.
11. THE ENCLOSURES WITH ELECTRICAL CIRCUITS SHALL BE A MINIMUM OF 5 FEET FROM ANY CLASSIFIED AREA, OTHERWISE EXPLOSION PROOF TYPE ENCLOSURES SHALL BE USED.

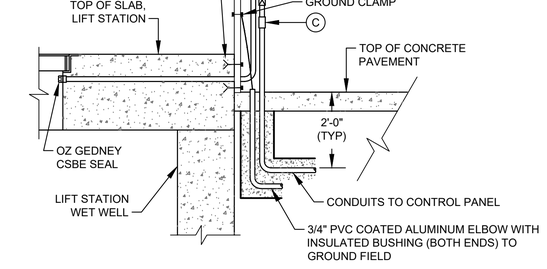

TYP SIDE VIEW FOR DETAIL 1, 2, & 6

(SEE NOTE 10)

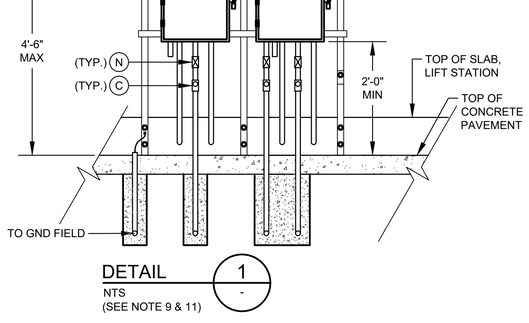

DETAIL 1
NTS
(SEE NOTE 9 & 11)

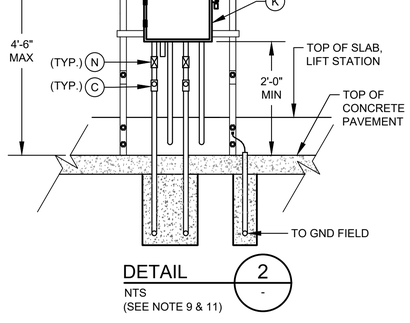

DETAIL 2
NTS
(SEE NOTE 9 & 11)

JUNCTION BOX EQUIPMENT SCHEDULE

A - OZ GEDNEY CSBE SEAL
B - WATERTIGHT CONDUIT HUB WITH INSULATED BUSHING
C - CLASS I, DIV 1, EXPLOSION PROOF SEAL INSTALLED PER NEC DIV 501
D - POWER TERMINAL BLOCK W/SCREW DOWN BOX LUGS
E - CONTROL TERM BLOCK W/SCREW DOWN BOX LUGS
F - MULTI-CONDUCTOR CABLE, REMOVE OUTER JACKET AS SHOWN
G - WIRING AS SCHEDULED
H - WIRING HARNESS PERMANENTLY AFFIXED
I - PUMP CONTROL WIRING FROM PUMP NO.1 TO PUMP NO.2
J - 1 1/2" PVC COATED CONDUIT NIPPLE
K - NEMA 6P STAINLESS STEEL JUNCTION BOX WITH GASKETED FRONT COVER, SINGLE QUARTER TURN, OIL-TIGHT LATCH AND PADLOCKING PROVISIONS, MINIMUM SIZE: 12"W X 16"H X 6"D
L - NAMEPLATE, SEE SPECIFICATIONES (SEE NAMEPLATE SCHEDULE)
M - NOT USED.
N - EXPANSION FITTING
O - DRAIN VENT

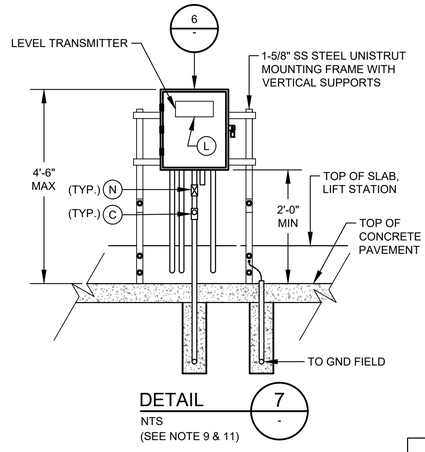

DETAIL 7
NTS
(SEE NOTE 9 & 11)

NO.	DATE	REVISION	APP.

NOTICE:
FOR YOUR SAFETY, YOU ARE REQUIRED BY TEXAS LAW TO CALL 811 AT LEAST 48 HOURS BEFORE YOU DIG SO THAT UNDERGROUND LINES CAN BE MARKED. THIS SIGNATURE DOES NOT FULFILL YOUR OBLIGATION TO CALL 811

VERIFICATION OF PRIVATE UTILITY LINES

Date

CenterPoint Energy natural gas utilities shown. (Gas service lines are not shown). This signature not be used for conflict verification.

Signature valid for six months.

Date

CenterPoint Energy/UNDERGROUND Electrical Facilities Verification ONLY. (This signature verifies existing underground facilities – not to be used for conflict verification)

Signature valid for six months.

Date

Approved for AT&T underground conduit facilities only.
Signature valid for one year.

PAPE–DAWSON
2107 CITYWEST BLVD, 3RD FLR I HOUSTON, TX 77042 I 713.428.2400
TEXAS ENGINEERING FIRM #470 I TEXAS SURVEYING FIRM #10028800

GAI
Gupta & Associates, Inc.
CONSULTING ENGINEERING
Registration No. F-2593
302 Dennis St.
Houston, Texas 77006
Tel: 713-636-2936
Fax: 713-636-2987
email: hforouzan@gaiconsulting.com

THIS DOCUMENT IS RELEASED FOR INTERIM REVIEW UNDER THE AUTHORIZATION OF HOSS FOROUZAN, P.E. (#77748) AND IS **NOT TO BE USED FOR CONSTRUCTION.**

SURVEYED BY:
PAPE–DAWSON ENGINEERS
FB NO. 24–018

CITY OF HOUSTON
HOUSTON PUBLIC WORKS

LIFT STATION REHABILITATION AND RECONSTRUCTION
BEN'S BRANCH, WOODLAND RIDGE, ELMWOOD HILLS, FOREST SHORES, TRAIL RIVER, RIVERLAWN

ELECTRICAL

BEN'S BRANCH LIFT STATION TYPICAL JUNCTION BOX DETAIL

WBS NUMBER	FOR CITY OF HOUSTON USE ONLY
R–000267–0180–3	
DRAWING SCALE	
AS NOTED	
CITY OF HOUSTON PM	
BRENDA JOHNSON P.E.	
SHEET NO. XX OF XX	

BB–E–07

FILE PATH: O:\H8107_Lift Station Rehabilitation And Reconstruction (Pape Dawson)\6 Drawings\Electrical\Working\Ben's Branch\H8107_BB–E–07.dwg

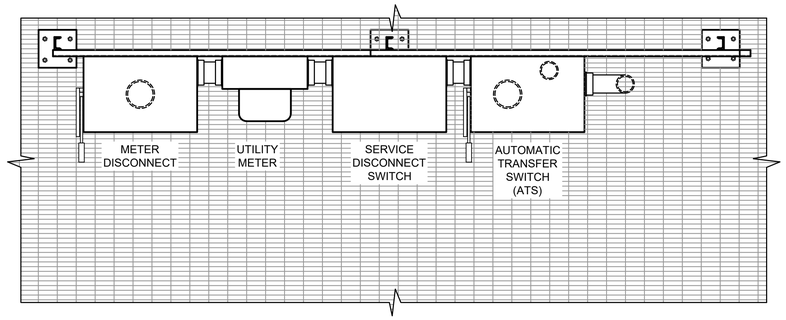

PLAN

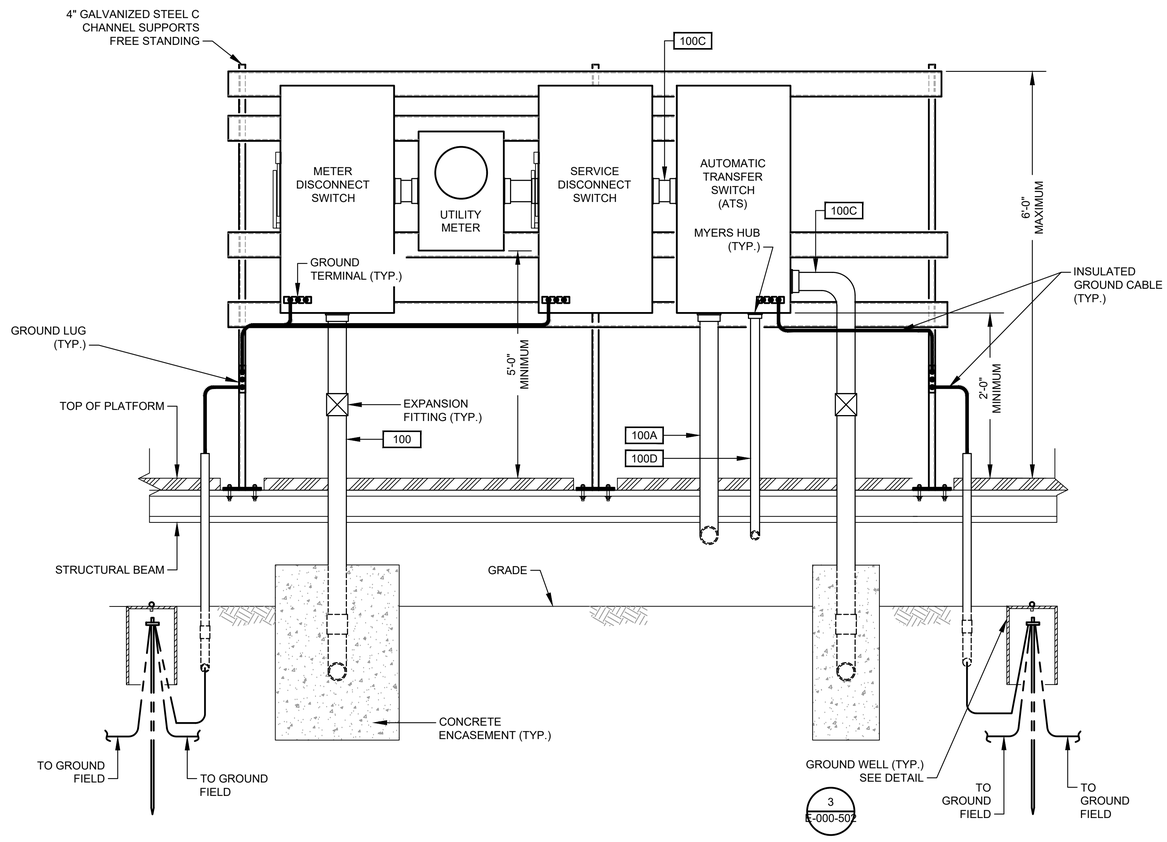

SERVICE MOUNTING RACK

DETAIL 1
NTS. -

NO.	DATE	REVISION	APP.

NOTICE:
FOR YOUR SAFETY, YOU ARE REQUIRED BY TEXAS LAW TO CALL 811 AT LEAST 48 HOURS BEFORE YOU DIG SO THAT UNDERGROUND LINES CAN BE MARKED. THIS SIGNATURE DOES NOT FULFILL YOUR OBLIGATION TO CALL 811

VERIFICATION OF PRIVATE UTILITY LINES

Date

CenterPoint Energy natural gas utilities shown. (Gas service lines are not shown). This signature not be used for conflict verification.

Signature valid for six months.

Date

CenterPoint Energy/UNDERGROUND Electrical Facilities Verification ONLY. (This signature verifies existing underground facilities – not to be used for conflict verification)

Signature valid for six months.

Date

Approved for AT&T underground conduit facilities only.
Signature valid for one year.

PAPE–DAWSON
2107 CITYWEST BLVD, 3RD FLR I HOUSTON, TX 77042 I 713.428.2400
TEXAS ENGINEERING FIRM #470 I TEXAS SURVEYING FIRM #10028800

GAI
Gupta & Associates, Inc.
CONSULTING ENGINEERING
Registration No. F-2593
302 Dennis St.
Houston, Texas 77006
Tel: 713-636-2936
Fax: 713-636-2987
email: hforouzan@gaiconsulting.com

SURVEYED BY:
PAPE–DAWSON ENGINEERS
FB NO. 24–018

THIS DOCUMENT IS RELEASED FOR INTERIM REVIEW UNDER THE AUTHORIZATION OF HOSS FOROUZAN, P.E. (#77748) AND IS **NOT TO BE USED FOR CONSTRUCTION.**

CITY OF HOUSTON
HOUSTON PUBLIC WORKS

LIFT STATION REHABILITATION AND RECONSTRUCTION
BEN'S BRANCH, WOODLAND RIDGE, ELMWOOD HILLS, FOREST SHORES, TRAIL RIVER, RIVERLAWN

ELECTRICAL

BEN'S BRANCH LIFT STATION ELECTRICAL SERVICE RACK DETAIL

WBS NUMBER	FOR CITY OF HOUSTON USE ONLY
R–000267–0180–3	
DRAWING SCALE	
AS NOTED	
CITY OF HOUSTON PM	
BRENDA JOHNSON P.E.	
SHEET NO. XX OF XX	

BB–E–08

FILE PATH: O:\H8107_Lift Station Rehabilitation And Reconstruction (Pape Dawson)\6 Drawings\Electrical\Working\Ben's Branch\H8107_BB-E-08.dwg

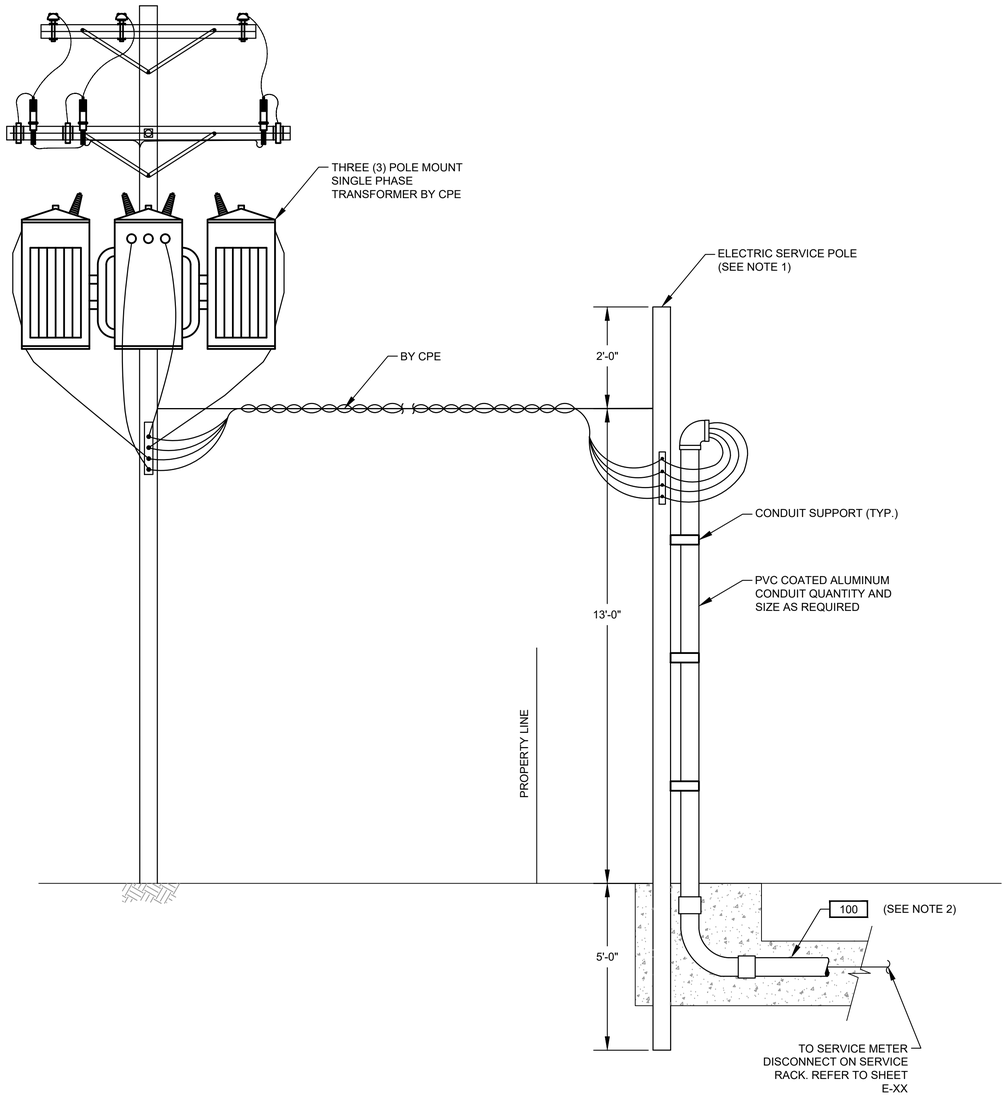

ELECTRICAL SERVICE ENTRANCE

DETAIL 1
NTS. -

NOTES:

1. WOODEN POLE 20' LONG. TOP DIAMETER 6", BOTTOM DIAMETER 8" PROVIDED AND INSTALLED BY ELECTRICAL CONTRACTOR.
2. ELECTRICAL SERVICE FEEDER PROVIDED AND INSTALLED BY ELECTRICAL CONTRACTOR. COORDINATE WITH CPE FOR THE REQUIREMENTS OF THE INSTALLATION.

NO.	DATE	REVISION	APP.

NOTICE:
FOR YOUR SAFETY, YOU ARE REQUIRED BY TEXAS LAW TO CALL 811 AT LEAST 48 HOURS BEFORE YOU DIG SO THAT UNDERGROUND LINES CAN BE MARKED. THIS SIGNATURE DOES NOT FULFILL YOUR OBLIGATION TO CALL 811

VERIFICATION OF PRIVATE UTILITY LINES

Date

CenterPoint Energy natural gas utilities shown. (Gas service lines are not shown). This signature not be used for conflict verification.

Signature valid for six months.

Date

CenterPoint Energy/UNDERGROUND Electrical Facilities Verification ONLY. (This signature verifies existing underground facilities – not to be used for conflict verification)

Signature valid for six months.

Date

Approved for AT&T underground conduit facilities only.
Signature valid for one year.

PAPE-DAWSON
2107 CITYWEST BLVD, 3RD FLR I HOUSTON, TX 77042 I 713.428.2400
TEXAS ENGINEERING FIRM #470 I TEXAS SURVEYING FIRM #10028800

GAI
Gupta & Associates, Inc.
CONSULTING ENGINEERING
Registration No. F-2593
302 Dennis St.
Houston, Texas 77006
Tel: 713-636-2936
Fax: 713-636-2987
email: hforouzan@gaiconsulting.com

SURVEYED BY:
PAPE-DAWSON ENGINEERS
FB NO. 24-018

THIS DOCUMENT IS RELEASED FOR INTERIM REVIEW UNDER THE AUTHORIZATION OF HOSS FOROUZAN, P.E. (#77748) AND IS **NOT TO BE USED FOR CONSTRUCTION.**

CITY OF HOUSTON
HOUSTON PUBLIC WORKS

LIFT STATION REHABILITATION AND RECONSTRUCTION
BEN'S BRANCH, WOODLAND RIDGE, ELMWOOD HILLS, FOREST SHORES, TRAIL RIVER, RIVERLAWN

ELECTRICAL

BEN'S BRANCH LIFT STATION SERIVCE POLE DETAIL

WBS NUMBER	FOR CITY OF HOUSTON USE ONLY
R-000267-0180-3	
DRAWING SCALE	
AS NOTED	
CITY OF HOUSTON PM	
BRENDA JOHNSON P.E.	
SHEET NO. XX OF XX	

BB-E-09

FILE PATH: O:\H8107_Lift Station Rehabilitation And Reconstruction (Pape Dawson)\6 Drawings\Electrical\Working\Ben's Branch\H8107_BB-E-09.dwg

	DESCRIPTION	SERVICE		ROUTING			CONDUIT & WIRE SIZE
		VOLTAGE	AMPS OR HP	FROM	TO	VIA	
A	MAIN BONDING JUMPER	--	--	MAIN FUSED DISCONNECT NEUTRAL	MAIN FUSED DISCONNECT GROUND	--	#2 CU GND.
B	EQUIPMENT BONDING JUMPER	--	--	MCC/POWER PANEL ENCLOSURE	POWER/CONTROL PANEL & EQUIPMENT	--	#2 CU GND.
C	GROUNDED ELECTRODE CONDUCTOR	--	--	GROUNDING ELECTRODE	MAIN SERVICE FUSED DISCONNECT GROUNDING	--	#2 CU GND.
100	SERVICE ENTRANCE	480V	400A	UTILITY POWER SERVICE	METER DISCONNECT	--	3#500MCM., #2 NEUT. #2 GND., 3-1/2" C.
100A	UTILITY POWER ENTRANCE	480V	400A	SERVICE DISCONNECT SWITCH	ATS	--	3#500MCM., #2 NEUT. #2 GND., 3-1/2" C.
100B	GENERATOR POWER ENTRANCE	480V	400A	STANDBY GENERATOR	ATS	--	3#500MCM., #2 NEUT. #2 GND., 3-1/2" C.
100C	480V POWER	480V	400A	ATS	CONTROL PANEL	--	3#500MCM., #2 NEUT. #2 GND., 3-1/2" C.
100D	GENERATOR CONTROL POWER	120/240V	50A	STANDBY GENERATOR	LIGHTING PANEL	--	3#4 AWG., #8 GND., 1-1/2"C.
100E	GENERATOR CONTROLS	24VDC	--	STANDBY GENERATOR	ATS	--	6#14 AWG., #14 GND., 3/4"C.
100F	NORMAL/EMERGENCY POWER STATUS	24VDC	--	ATS	CONTROL PANEL	--	6#14 AWG., #14 GND., 3/4"C.
100G	GENERATOR ANNUNCIATOR	24VDC	--	STANDBY GENERATOR	CONTROL PANEL	--	12#14 AWG., #14 GND., 1"C.
101	GROUND ELECTRODE CONDUCTOR	--	--	MCC ENCLOSURE	GROUND FIELD	--	#2 GND.
104	GROUND ELECTRODE CONDUCTOR	--	--	CONTROL PANEL	GROUND FIELD	--	#2 GND.
105	COMMUNICATION	--	--	COMMUNICATION POLE	CONTROL PANEL	--	1-1/2"C. CAT 5E
200	PUMP NO. 1 POWER	480V	60HP	PUMP NO. 1	PUMP NO. 1 JUNCTION BOX	--	MANUFACTURER CABLE IN 2-1/2"C.
201	PUMP NO. 1 CONTROLS	120V	--	PUMP NO. 1	PUMP NO. 1 JUNCTION BOX	--	MANUFACTURER CABLE IN 2-1/2"C.
202	PUMP NO. 1 POWER	480V	60HP	PUMP NO. 1 JUNCTION BOX	PUMP STARTER	--	3#2, #6 GND., 1-1/2"C.
203	COMBINED PUMP CONTROLS	120V	--	PUMP NO. 1 JUNCTION BOX	PUMP STARTER	COMBINE PUMP 1 & 2 CONTROLS	COMBINE 200 & 300 TAG WIRING, 8#14, 1"C.
300	PUMP NO. 2 POWER	480V	60HP	PUMP NO. 2	PUMP NO. 2 JUNCTION BOX	--	MANUFACTURER CABLE IN 2-1/2"C.
301	PUMP NO. 2 CONTROLS	120V	--	PUMP NO. 2	PUMP NO. 2 JUNCTION BOX	--	MANUFACTURER CABLE IN 2-1/2"C.
302	PUMP NO. 2 POWER	480V	60HP	PUMP NO. 2 JUNCTION BOX	PUMP STARTER	--	3#2, #6 GND., 2"C.
400	PUMP NO. 103 POWER	480V	60HP	PUMP NO. 3	PUMP NO. 3 JUNCTION BOX	--	MANUFACTURER CABLE IN 2-1/2"C.
401	PUMP NO. 103 CONTROLS	120V	--	PUMP NO. 3	PUMP NO. 3 JUNCTION BOX	--	MANUFACTURER CABLE IN 2-1/2"C.
402	PUMP NO. 103 POWER	480V	60HP	PUMP NO. 3 JUNCTION BOX	PUMP STARTER	--	3#2, #6 GND., 1-1/2" C.
403	COMBINED PUMP CONTROLS	120V	--	PUMP NO. 3 JUNCTION BOX	CONTROL PANEL	--	4#14, 1" C.
500	ODOR CONTROL FEEDER	480V	30A	CONTROL PANEL	ODOR CONTROL PANEL	--	3#10 AWG., #10 GND., 1" C.
1000	LEVEL TRANSMITTER	24VDC	--	TRANSMITTER JUNCTION BOX	TRANSMITTER JUNCTION BOX	--	MANUFACTURER'S CABLE IN 2-1/2"C
1001	LEVEL TRANSMITTER	24VDC	--	TRANSMITTER JUNCTION BOX	TRANSMITTER JUNCTION BOX	--	MANUFACTURER'S CABLE IN 2-1/2"C
1002	COMBINED LEVEL TRANSMITTERS & FLOAT SWITCH	24VDC	--	CONTROL PANEL	TRANSMITTER JUNCTION BOX	--	2-TRI, 4#14, 2" C.
1003	WELL FLOAT SWITCHES	24VDC	--	TRANSMITTER JUNCTION BOX	FLOAT SWITCH NO.1 & NO.2	--	MANUFACTURER'S CABLE IN 2-1/2"C
1100	120VAC FOR RECEPTACLE	-	--	LIGHTING PANEL	RECEPTACLE NEXT TO TRANSMITTER J-BOX	--	2#12, #12G, 1" C.
1200	120VAC FOR RECEPTACLE	-	--	LIGHTING PANEL	RECEPTACLE NEXT TO PUMP NO.2 J-BOX	--	2#12, #12G, 1" C.
1300	SITE LIGHTING	120VAC	--	LIGHTING PANEL	SITE LIGHTS	--	2#12, #12G, 1" C.
1400	ODOR CONTROL SIGNAL	24VDC	--	CONTROL PANEL	ODOR CONTROL PANEL	--	8#14, #14 GND., 1" C.
1401	ODOR CONTROL BLOWER	480V	3HP	ODOR CONTROL PANEL	ODOR CONTROL BLOWER	--	3#12, #12G, 1" C.
1500	CHEMICAL INJECTION PUMP	120VAC	--	LIGHTING PANEL	CHEMICAL INJECTION PUMP	--	2#12, #12G, 1" C.
1501	LEVEL TRANSMITTER FOR CHEMICAL TANK	24VDC	--	CONTROL PANEL	LEVEL TRANSMITTER "LT-3" ON CHEMICAL TANK	--	1-TRI, 1" C.

NO.	DATE	REVISION	APP.

NOTICE:
FOR YOUR SAFETY, YOU ARE REQUIRED BY TEXAS LAW TO CALL 811 AT LEAST 48 HOURS BEFORE YOU DIG SO THAT UNDERGROUND LINES CAN BE MARKED. THIS SIGNATURE DOES NOT FULFILL YOUR OBLIGATION TO CALL 811

VERIFICATION OF PRIVATE UTILITY LINES

Date

CenterPoint Energy natural gas utilities shown. (Gas service lines are not shown). This signature not be used for conflict verification.

Signature valid for six months.

Date

CenterPoint Energy/UNDERGROUND Electrical Facilities Verification ONLY. (This signature verifies existing underground facilities – not to be used for conflict verification)

Signature valid for six months.

Date

Approved for AT&T underground conduit facilities only.
Signature valid for one year.

PAPE–DAWSON
2107 CITYWEST BLVD, 3RD FLR I HOUSTON, TX 77042 I 713.428.2400
TEXAS ENGINEERING FIRM #470 I TEXAS SURVEYING FIRM #10028800

GAI
Gupta & Associates, Inc.
CONSULTING ENGINEERING
Registration No. F-2593
302 Dennis St.
Houston, Texas 77006
Tel: 713-636-2936
Fax: 713-636-2987
email: hforouzan@guiconsulting.com

SURVEYED BY:
PAPE–DAWSON ENGINEERS
FB NO. 24–018

THIS DOCUMENT IS RELEASED FOR INTERIM REVIEW UNDER THE AUTHORIZATION OF HOSS FOROUZAN, P.E. (#77748) AND IS **NOT TO BE USED FOR CONSTRUCTION.**

CITY OF HOUSTON
HOUSTON PUBLIC WORKS

LIFT STATION REHABILITATION AND RECONSTRUCTION
BEN'S BRANCH, WOODLAND RIDGE, ELMWOOD HILLS, FOREST SHORES, TRAIL RIVER, RIVERLAWN

ELECTRICAL

BEN'S BRANCH LIFT STATION CONDUIT SCHEDULE

WBS NUMBER	FOR CITY OF HOUSTON USE ONLY
R–000267–0180–3	
DRAWING SCALE	
AS NOTED	
CITY OF HOUSTON PM	
BRENDA JOHNSON P.E.	
SHEET NO. XX OF XX	

BB–E–10

FILE PATH: O:\H8107_Lift Station Rehabilitation And Reconstruction (Pape Dawson)\6 Drawings\Electrical\Working\Ben's Branch\H8107_BB–E–10.dwg

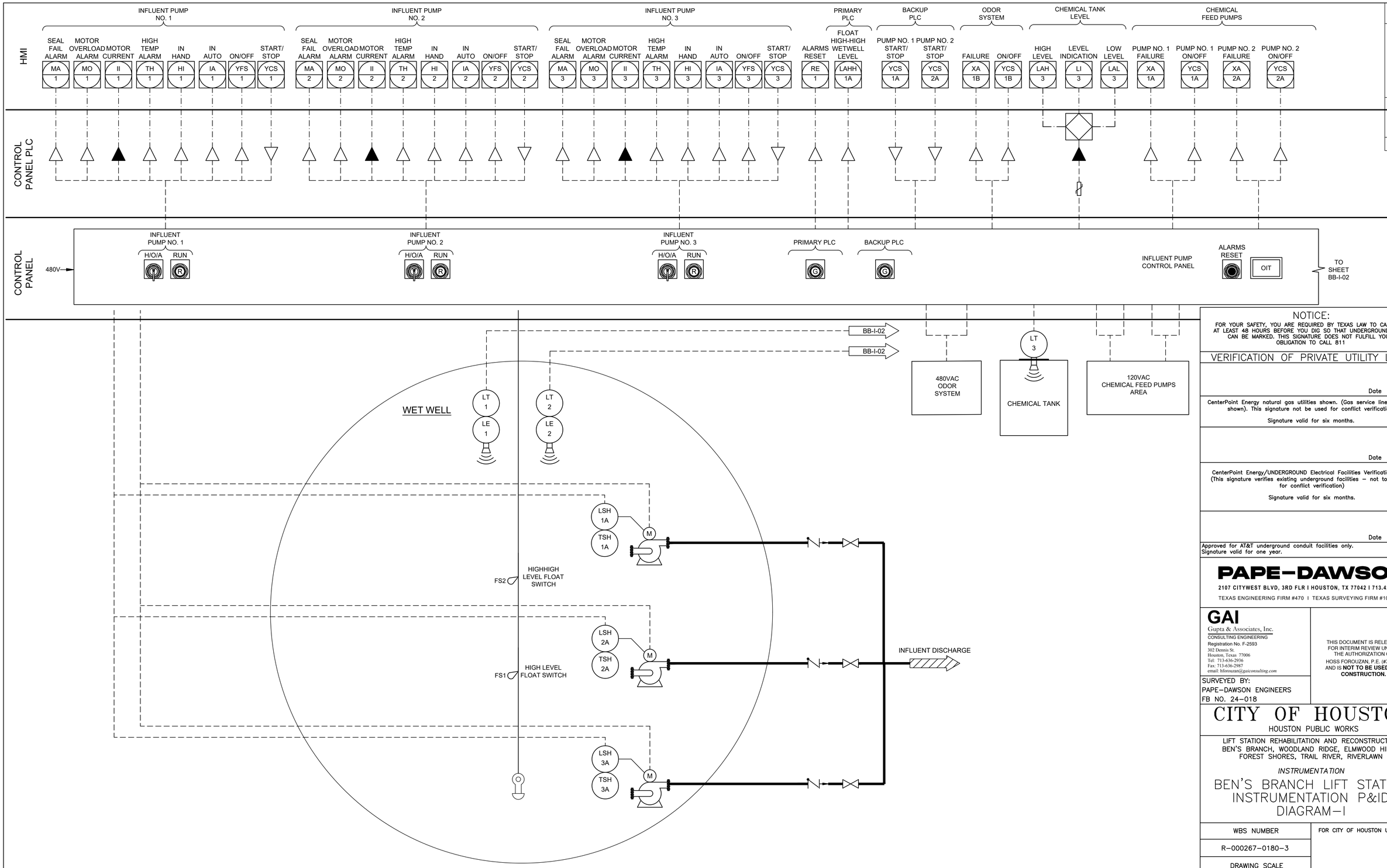

NOTICE:
FOR YOUR SAFETY, YOU ARE REQUIRED BY TEXAS LAW TO CALL 811 AT LEAST 48 HOURS BEFORE YOU DIG SO THAT UNDERGROUND LINES CAN BE MARKED. THIS SIGNATURE DOES NOT FULFILL YOUR OBLIGATION TO CALL 811

VERIFICATION OF PRIVATE UTILITY LINES

Date

CenterPoint Energy natural gas utilities shown. (Gas service lines are not shown). This signature not be used for conflict verification.

Signature valid for six months.

Date

CenterPoint Energy/UNDERGROUND Electrical Facilities Verification ONLY. (This signature verifies existing underground facilities – not to be used for conflict verification)

Signature valid for six months.

Date

Approved for AT&T underground conduit facilities only.
Signature valid for one year.

PAPE–DAWSON
2107 CITYWEST BLVD, 3RD FLR I HOUSTON, TX 77042 I 713.428.2400
TEXAS ENGINEERING FIRM #470 I TEXAS SURVEYING FIRM #10028800

GAI
Gupta & Associates, Inc.
CONSULTING ENGINEERING
Registration No. F-2593
302 Dennis St.
Houston, Texas 77006
Tel: 713-636-2936
Fax: 713-636-2987
email: hforouzan@guiconsulting.com

SURVEYED BY:
PAPE–DAWSON ENGINEERS
FB NO. 24–018

THIS DOCUMENT IS RELEASED FOR INTERIM REVIEW UNDER THE AUTHORIZATION OF HOSS FOROUZAN, P.E. (#77748) AND IS **NOT TO BE USED FOR CONSTRUCTION.**

CITY OF HOUSTON
HOUSTON PUBLIC WORKS

LIFT STATION REHABILITATION AND RECONSTRUCTION
BEN'S BRANCH, WOODLAND RIDGE, ELMWOOD HILLS, FOREST SHORES, TRAIL RIVER, RIVERLAWN

INSTRUMENTATION

BEN'S BRANCH LIFT STATION INSTRUMENTATION P&ID DIAGRAM–I

WBS NUMBER	FOR CITY OF HOUSTON USE ONLY
R–000267–0180–3	
DRAWING SCALE	
AS NOTED	
CITY OF HOUSTON PM	
BRENDA JOHNSON P.E.	
SHEET NO. XX OF XX	

BB–I–01

FILE PATH: O:\H8107_Lift Station Rehabilitation And Reconstruction (Pape Dawson)\6 Drawings\Instrumentation And Control\Working\Ben's Branch\H8107_BB–I–01.dwg

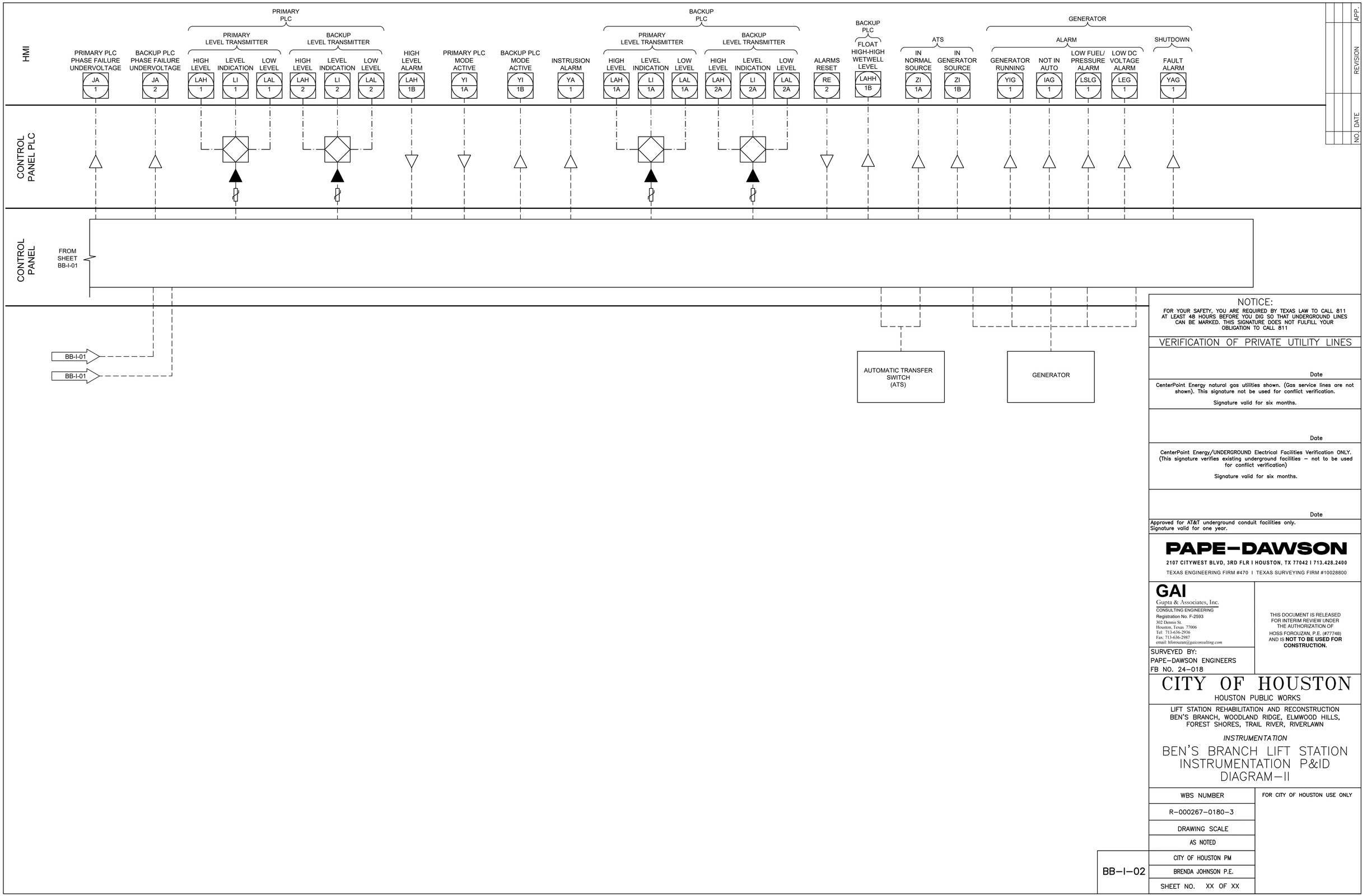

APP. | REVISION | DATE | NO.

NOTICE:
FOR YOUR SAFETY, YOU ARE REQUIRED BY TEXAS LAW TO CALL 811 AT LEAST 48 HOURS BEFORE YOU DIG SO THAT UNDERGROUND LINES CAN BE MARKED. THIS SIGNATURE DOES NOT FULFILL YOUR OBLIGATION TO CALL 811

VERIFICATION OF PRIVATE UTILITY LINES

Date

CenterPoint Energy natural gas utilities shown. (Gas service lines are not shown). This signature not be used for conflict verification.

Signature valid for six months.

Date

CenterPoint Energy/UNDERGROUND Electrical Facilities Verification ONLY. (This signature verifies existing underground facilities – not to be used for conflict verification)

Signature valid for six months.

Date

Approved for AT&T underground conduit facilities only.
Signature valid for one year.

PAPE–DAWSON
2107 CITYWEST BLVD, 3RD FLR I HOUSTON, TX 77042 I 713.428.2400
TEXAS ENGINEERING FIRM #470 I TEXAS SURVEYING FIRM #10028800

GAI
Gupta & Associates, Inc.
CONSULTING ENGINEERING
Registration No. F-2593
302 Dennis St.
Houston, Texas 77006
Tel: 713-636-2936
Fax: 713-636-2987
email: hforouzan@guiconsulting.com

SURVEYED BY:
PAPE–DAWSON ENGINEERS
FB NO. 24–018

THIS DOCUMENT IS RELEASED FOR INTERIM REVIEW UNDER THE AUTHORIZATION OF HOSS FOROUZAN, P.E. (#77748) AND IS **NOT TO BE USED FOR CONSTRUCTION.**

CITY OF HOUSTON
HOUSTON PUBLIC WORKS

LIFT STATION REHABILITATION AND RECONSTRUCTION
BEN'S BRANCH, WOODLAND RIDGE, ELMWOOD HILLS, FOREST SHORES, TRAIL RIVER, RIVERLAWN

INSTRUMENTATION

BEN'S BRANCH LIFT STATION INSTRUMENTATION P&ID DIAGRAM – II

WBS NUMBER	FOR CITY OF HOUSTON USE ONLY
R–000267–0180–3	
DRAWING SCALE	
AS NOTED	
CITY OF HOUSTON PM	
BRENDA JOHNSON P.E.	
SHEET NO. XX OF XX	

BB–I–02

FILE PATH: O:\H8107_Lift Station Rehabilitation And Reconstruction (Pape Dawson)\6 Drawings\Instrumentation And Control\Working\Ben's Branch\H8107_BB–I–02.dwg

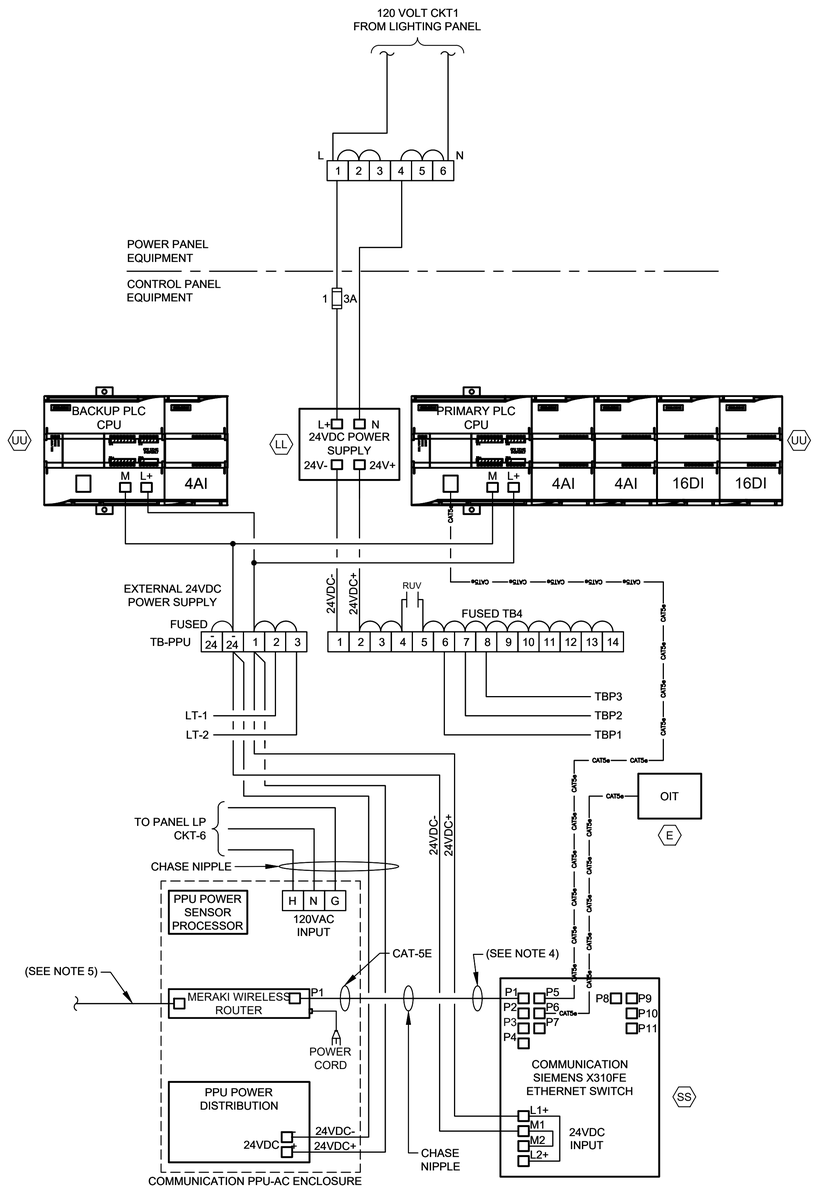

CONTROL POWER &
COMMUNICATIONS WIRING

DIAGRAM

NTS

(SEE NOTE 2 & 6)

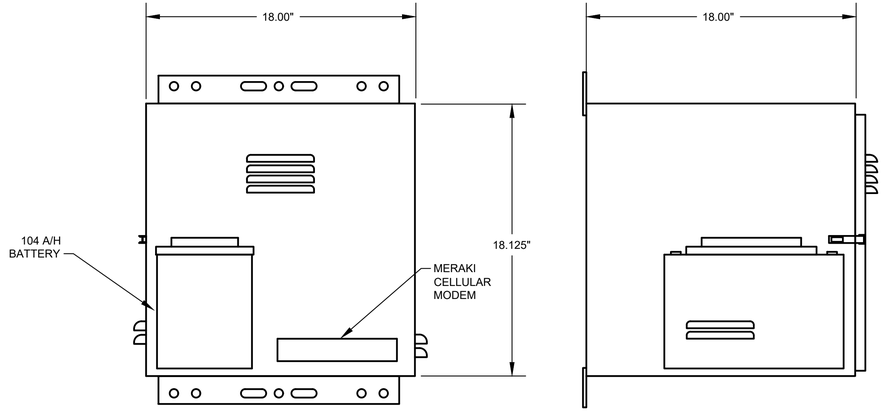

PPU-AC
CONTROL ENCLOSURE

ELEVATION

NTS

(SEE NOTE 7)

NOTES:

1. FOR DESCRIPTION AND RATINGS OF ITEMS INDICATED WITH ITEM TAG, SEE DEVICE RATINGS SCHEDULE.
2. REFER TO SPEC SECTION 16120 FOR CONDUCTOR COLOR CODE.
3. THE PLC POWER SUPPLY SHALL FEED THE 24VDC I/O.
4. ETHERNET CABLE FOR MERAKI CELLULAR ROUTER (P1).
5. POE CABLE TO RADIO.
6. COMMUNICATION PPU-AC & SCADA SHALL BE PROVIDED BY CONTRACTOR INCLUDING TO RUN CONDUITS & WIRES.
7. COORDINATE WITH VENDOR TO PROVIDE PROPER VENTILATION WHERE APPLICABLE.

NO.	DATE	REVISION	APP.

NOTICE:
FOR YOUR SAFETY, YOU ARE REQUIRED BY TEXAS LAW TO CALL 811 AT LEAST 48 HOURS BEFORE YOU DIG SO THAT UNDERGROUND LINES CAN BE MARKED. THIS SIGNATURE DOES NOT FULFILL YOUR OBLIGATION TO CALL 811

VERIFICATION OF PRIVATE UTILITY LINES

Date

CenterPoint Energy natural gas utilities shown. (Gas service lines are not shown). This signature not be used for conflict verification.

Signature valid for six months.

Date

CenterPoint Energy/UNDERGROUND Electrical Facilities Verification ONLY. (This signature verifies existing underground facilities – not to be used for conflict verification)

Signature valid for six months.

Date

Approved for AT&T underground conduit facilities only.
Signature valid for one year.

PAPE–DAWSON

2107 CITYWEST BLVD, 3RD FLR I HOUSTON, TX 77042 I 713.428.2400

TEXAS ENGINEERING FIRM #470 I TEXAS SURVEYING FIRM #10028800

GAI
Gupta & Associates, Inc.
CONSULTING ENGINEERING
Registration No. F-2593
302 Dennis St.
Houston, Texas 77006
Tel: 713-636-2936
Fax: 713-636-2987
email: hforouzan@gaiconsulting.com

THIS DOCUMENT IS RELEASED FOR INTERIM REVIEW UNDER THE AUTHORIZATION OF HOSS FOROUZAN, P.E. (#77748) AND IS **NOT TO BE USED FOR CONSTRUCTION.**

SURVEYED BY:
PAPE–DAWSON ENGINEERS
FB NO. 24–018

CITY OF HOUSTON

HOUSTON PUBLIC WORKS

LIFT STATION REHABILITATION AND RECONSTRUCTION
BEN'S BRANCH, WOODLAND RIDGE, ELMWOOD HILLS, FOREST SHORES, TRAIL RIVER, RIVERLAWN

INSTRUMENTATION

BEN'S BRANCH LIFT STATION COMMUNICATIONS DIAGRAM

WBS NUMBER	FOR CITY OF HOUSTON USE ONLY
R–000267–0180–3	
DRAWING SCALE	
AS NOTED	
CITY OF HOUSTON PM	
BRENDA JOHNSON P.E.	
SHEET NO. XX OF XX	

BB–I–03

FILE PATH: O:\H8107_Lift Station Rehabilitation And Reconstruction (Pape Dawson)\6 Drawings\Instrumentation And Control\Working\Ben's Branch\H8107_BB–I–03.dwg

EQUIPMENT AND DEVICE SCHEDULE

ITEM	QUANTITY	DESCRIPTION
A	1	PANEL BOARD, 120/240V, 1 PHASE, 3 WIRE, 100A, 12 CKTS
B	2	FULL VOLTAGE, NON-REVERSING, SINGLE SPEED, AUTOMATIC MOTOR STARTER W/120 VOLT CONTROL COIL, NEMA SIZE AS SCHEDULED.
C	2	TIME DELAY RELAY WITH THREE FORM C CONTACTS, 120VAC COIL AND 11 PIN SOCKET BASE.
D	1	SINGLE CHANNEL INTRINSICALLY SAFE RELAY
E	1	PROGRAMMING SCREEN (OIT)
F	3	HAND-OFF-AUTO SWITCH, 3 POSITION, HEAVY-DUTY, OILTIGHT WITH 2 SETS OF CONTACT BLOCKS (PUMP CONTROL)
G	3	INDICATING LIGHT, HEAVY DUTY, OILTIGHT, RED, 24 VDC, LED, WITH "RUN" LEGEND
H	1	PERPETUAL POWER UNIT (PPU)
I	1	PUMP ALARM RESET PUSHBUTTON
J	2	SWITCH FOR CABINET LIGHT, 120V, 20A, SPST
K	3	DUPLEX RECEPTACLE, 120V, 20A, 2 WIRE, GROUNDED
L	2	24" LED STRIP LIGHT 120V SUITABLE FOR ZERO DEGREE OPERATION.
M	1	SURGE PROTECTOR - INCOMING POWER
N	*	NOT USED.
P	2	CURRENT TRANSFORMER, RATIO AS SCHEDULED W/4-20mA OUTPUT.
Q	12	TERMINAL BLOCKS, SIZED FOR MOTOR POWER REQUIREMENTS
R	*	RELAY WITH THREE FORM C CONTACTS, AND 11 PIN SOCKET BASE
S	*	NOT USED.
T	*	NAMEPLATES, SEE SPECIFICATIONS (SEE NAMEPLATE SCHEDULE)
U	2	SOLID STATE MOTOR OVERLOAD RELAY
V	6	FUSE HOLDER & FUSES - PHASE FAILURE
W	1	NEMA 3R GASKETED ALUMINUM ENCLOSURE WITHOUT VENTS 72"H x 60"W x 36"D
X	1	DOOR MOUNTED ROTARY HANDLE DISCONNECT SWITCH (SUITABLE FOR ENVIRONMENT)
Y	1	THERMAL-MAGNETIC MOLDED CASE MAIN CIRCUIT BREAKER, SIZE AS SCHEDULED
Z	2	ADJUSTABLE INSTANTENOUS TRIP MOTOR CIRCUIT PROTECTOR, SIZE AS SCHEDULED
AA	*	TERMINAL BLOCKS
BB	2	EXTERNAL OVERLOAD RESET PUSHBUTTON MECHANISM
CC	3	ANALOG I/O SURGE SUPPRESSOR
DD	1	WIRE DUCT 2" WIDE x 2" DEEP MINIMUM
EE	1	THERMAL-MAGNETIC MODLED CASE CIRCUIT BREAKER FOR LIGHTING TRANSFORMER, SIZE AS SCHEDULED
FF	1	GROUND BUS
GG	1	25 KVA, 480 - 240/120V,1ϕ, 3W DRY TYPE NEMA 3R ENCLOSURE TRANSFORMER (PAD MOUNTED)
HH	*	NOT USED.
II	1	120VAC - 24VAC POWER SUPPLY (AS REQUIRED)
JJ	11	CARTRIDGE FUSES & FUSE HOLDER
KK	8	QUARTER TURN CAPTIVE DOOR CLOSURE
LL	1	120VAC - 24VDC PLC POWER SUPPLY 5A
MM	2	MOTION SWITCH
NN	*	NOT USED
PP	2	INDICATING LED LIGHT, HEAVY DUTY, OILTIGHT, GREEN, 24 VDC, LED WITH " PRIMARY PLC" & "BACKUP PLC" LEGEND
QQ	*	NOT USED
RR	*	NOT USED
SS	1	COMMUNICATION ETHERNET SWITCH
TT	1	POWER SURGE PROTECTOR - CONTROL POWER
UU	2	PROGRAMMABLE LOGIC CONTROLLER WITH EXPANSION UNIT
VV	1	PHASE AND UNDER VOLTAGE MONITOR
WW	*	FUSED TERMINAL BLOCKS
XX	2	PUMP PROTECTION MODULE RATED FOR CLASS I, DIVISION I
YY	2	ANALOG SIGNAL ISOLATOR
ZZ	3	POWER FACTOR CORRECTION CAPACITOR NEMA 3R STAINLESS STEEL
AB	-	NOT USED.
AC	1	POWER DISTRIBUTION BLOCK
AD	1	NEUTRAL LUG
AE	1	6" EXHAUST FAN, 120V, STAINLESS FILTERS & GRILL PACKAGE W/BUG GUARD
AF	1	T-STAT FOR EXHAUST FAN

* - AS SCHEDULED

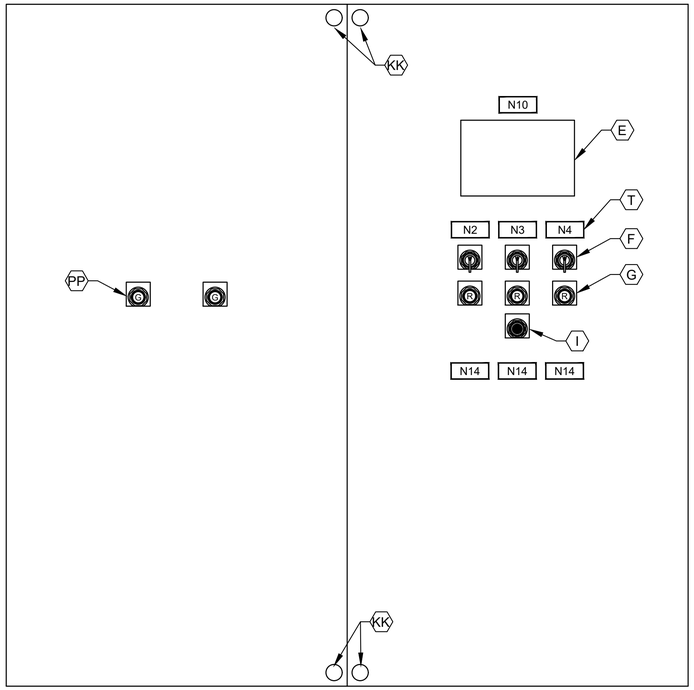

CONTROL PANEL FRONT INNER DOOR

ELEVATION

NTS

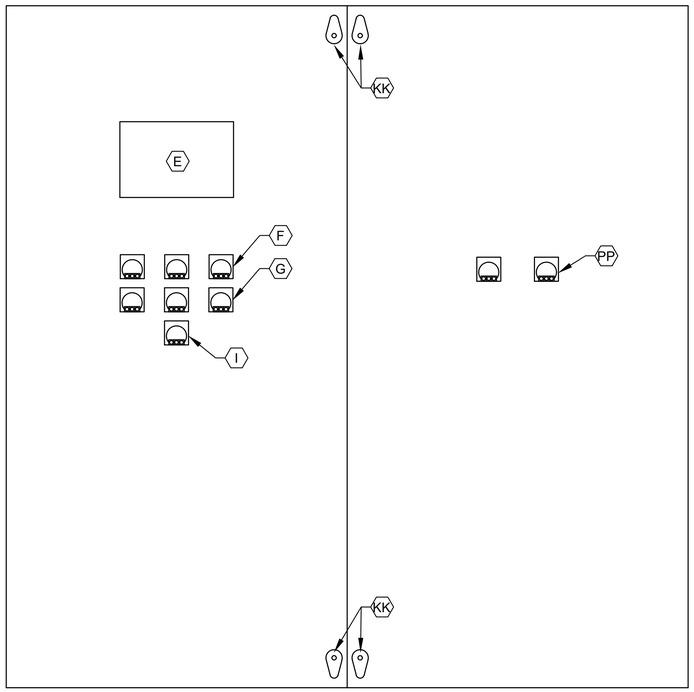

CONTROL PANEL BACK INNER DOOR

ELEVATION

NTS

NOTES:

1. NAMEPLATES SHALL BE MOUNTED TO PANELS USING STAINLESS STEEL HARDWARE.
2. REFER SPECIFICATIONS FOR ALL PANEL COMPONENTS.

NO.	DATE	REVISION	APP.

NOTICE:
FOR YOUR SAFETY, YOU ARE REQUIRED BY TEXAS LAW TO CALL 811 AT LEAST 48 HOURS BEFORE YOU DIG SO THAT UNDERGROUND LINES CAN BE MARKED. THIS SIGNATURE DOES NOT FULFILL YOUR OBLIGATION TO CALL 811

VERIFICATION OF PRIVATE UTILITY LINES

Date

CenterPoint Energy natural gas utilities shown. (Gas service lines are not shown). This signature not be used for conflict verification.

Signature valid for six months.

Date

CenterPoint Energy/UNDERGROUND Electrical Facilities Verification ONLY. (This signature verifies existing underground facilities – not to be used for conflict verification)

Signature valid for six months.

Date

Approved for AT&T underground conduit facilities only.
Signature valid for one year.

PAPE–DAWSON
2107 CITYWEST BLVD, 3RD FLR I HOUSTON, TX 77042 I 713.428.2400
TEXAS ENGINEERING FIRM #470 I TEXAS SURVEYING FIRM #10028800

GAI
Gupta & Associates, Inc.
CONSULTING ENGINEERING
Registration No. F-2593
302 Dennis St.
Houston, Texas 77006
Tel: 713-636-2936
Fax: 713-636-2987
email: hforouzan@gaiconsulting.com

SURVEYED BY:
PAPE–DAWSON ENGINEERS
FB NO. 24–018

THIS DOCUMENT IS RELEASED FOR INTERIM REVIEW UNDER THE AUTHORIZATION OF HOSS FOROUZAN, P.E. (#77748) AND IS **NOT TO BE USED FOR CONSTRUCTION.**

CITY OF HOUSTON
HOUSTON PUBLIC WORKS

LIFT STATION REHABILITATION AND RECONSTRUCTION
BEN'S BRANCH, WOODLAND RIDGE, ELMWOOD HILLS, FOREST SHORES, TRAIL RIVER, RIVERLAWN

INSTRUMENTATION

BEN'S BRANCH LIFT STATION CONTROL CABINET EQUIPMENT LAYOUT & SCHEDULE

WBS NUMBER	FOR CITY OF HOUSTON USE ONLY
R–000267–0180–3	
DRAWING SCALE	
AS NOTED	
CITY OF HOUSTON PM	
BRENDA JOHNSON P.E.	
SHEET NO. XX OF XX	

BB–I–04

FILE PATH: O:\H8107_Lift Station Rehabilitation And Reconstruction (Pape Dawson)\6 Drawings\Instrumentation And Control\Working\Ben's Branch\H8107_BB–I–04.dwg

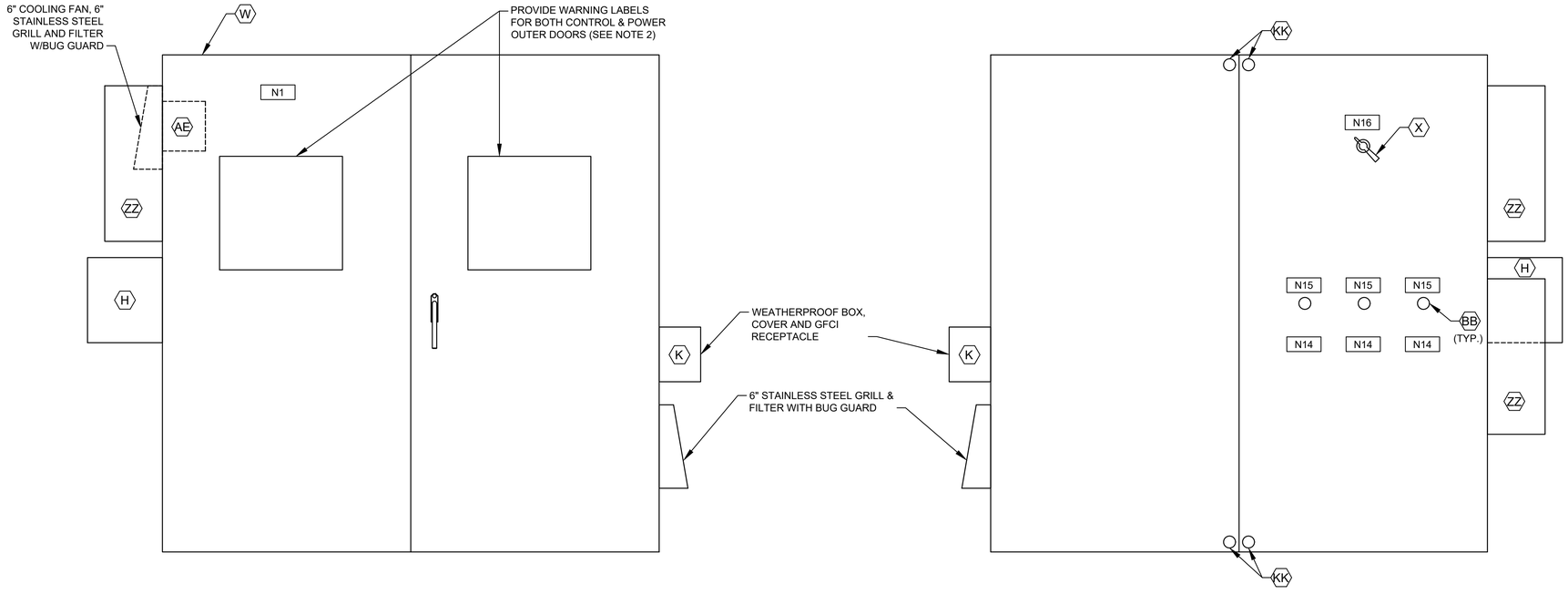

CONTROL CABINET (CONTROL SIDE)
OUTER DOOR

ELEVATION

NTS

CONTROL CABINET (POWER SIDE)
INNER DOOR

ELEVATION

NTS

(SEE NOTE 1)

NOTES:

1. SEE SHEET BB-I-04 FOR EQUIPMENT SCHEDULE.
2. REFER TO NEC SECTIONS 110.16 & 110.21

NAMEPLATE SCHEDULE

DESIGNATION	ENGRAVED	DESIGNATION	ENGRAVED
N1	PUMP STATION DESIGNATION	N8	NOT USED.
N2	PUMP NO. 1	N9	NOT USED.
N3	PUMP NO. 2	N10	PROGRAMMING SCREEN
N4	PUMP NO. 3	N11	NOT USED.
N5	NOT USED.	N12	PRIMARY PLC
N6	NOT USED.	N13	BACKUP PLC
N7	NOT USED.	N14	MOTOR DATA
			HORSEPOWER (OUTPUT) ----------
			RPM AT FULL LOAD ----------
			TIME RATING ----------
			FREQUENCY ----------
			NUMBER OF PHASES ----------
			MODEL NUMBER ----------
			RATED VOLTAGE ----------
			SERVICE FACTOR ----------
			FULL LOAD AMPS ----------
			INSULATION CLAS ----------
			NEMA DESIGN LETTER ----------
			TEMPERATURE RISE ----------
			NEMA FRAME SIZE ----------
			DATE OF MANUFACTURE ----------
			THERMO PROTECTION (IF REQUIRED) --
			MOISTURE PROTECTION (IF REQUIRED)-
		N15	EXTERNAL OVERLOAD RESET PUSH BUTTON MECHANISM
		N16	MAIN BREAKER

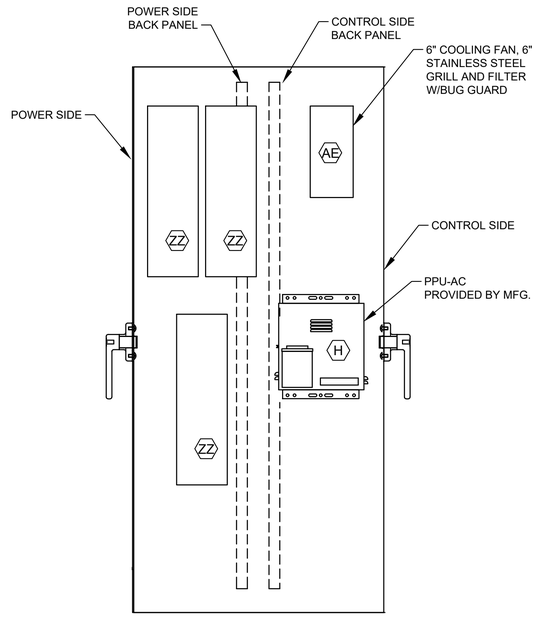

CONTROL CABINET (LEFT SIDE VIEW)

ELEVATION

NTS

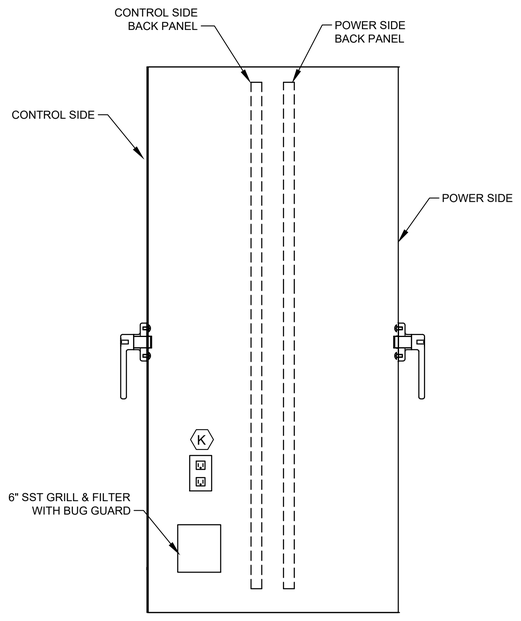

CONTROL CABINET (RIGHT SIDE VIEW)

ELEVATION

NTS

NO.	DATE	REVISION	APP.

NOTICE:
FOR YOUR SAFETY, YOU ARE REQUIRED BY TEXAS LAW TO CALL 811 AT LEAST 48 HOURS BEFORE YOU DIG SO THAT UNDERGROUND LINES CAN BE MARKED. THIS SIGNATURE DOES NOT FULFILL YOUR OBLIGATION TO CALL 811

VERIFICATION OF PRIVATE UTILITY LINES

Date

CenterPoint Energy natural gas utilities shown. (Gas service lines are not shown). This signature not be used for conflict verification.

Signature valid for six months.

Date

CenterPoint Energy/UNDERGROUND Electrical Facilities Verification ONLY. (This signature verifies existing underground facilities – not to be used for conflict verification)

Signature valid for six months.

Date

Approved for AT&T underground conduit facilities only.
Signature valid for one year.

PAPE-DAWSON
2107 CITYWEST BLVD, 3RD FLR I HOUSTON, TX 77042 I 713.428.2400
TEXAS ENGINEERING FIRM #470 I TEXAS SURVEYING FIRM #10028800

GAI
Gupta & Associates, Inc.
CONSULTING ENGINEERING
Registration No. F-2593
302 Dennis St.
Houston, Texas 77006
Tel: 713-636-2936
Fax: 713-636-2987
email: hforouzan@gaiconsulting.com

SURVEYED BY:
PAPE-DAWSON ENGINEERS
FB NO. 24-018

THIS DOCUMENT IS RELEASED FOR INTERIM REVIEW UNDER THE AUTHORIZATION OF HOSS FOROUZAN, P.E. (#77748) AND IS **NOT TO BE USED FOR CONSTRUCTION.**

CITY OF HOUSTON
HOUSTON PUBLIC WORKS

LIFT STATION REHABILITATION AND RECONSTRUCTION
BEN'S BRANCH, WOODLAND RIDGE, ELMWOOD HILLS, FOREST SHORES, TRAIL RIVER, RIVERLAWN

INSTRUMENTATION

BEN'S BRANCH LIFT STATION CONTROL CABINET EQUIPMENT LAYOUT-I

WBS NUMBER	FOR CITY OF HOUSTON USE ONLY
R-000267-0180-3	
DRAWING SCALE	
AS NOTED	
CITY OF HOUSTON PM	
BRENDA JOHNSON P.E.	
SHEET NO. XX OF XX	

BB-I-05

FILE PATH: O:\H8107_Lift Station Rehabilitation And Reconstruction (Pape Dawson)\6 Drawings\Instrumentation And Control\Working\Ben's Branch\H8107_BB-I-05.dwg

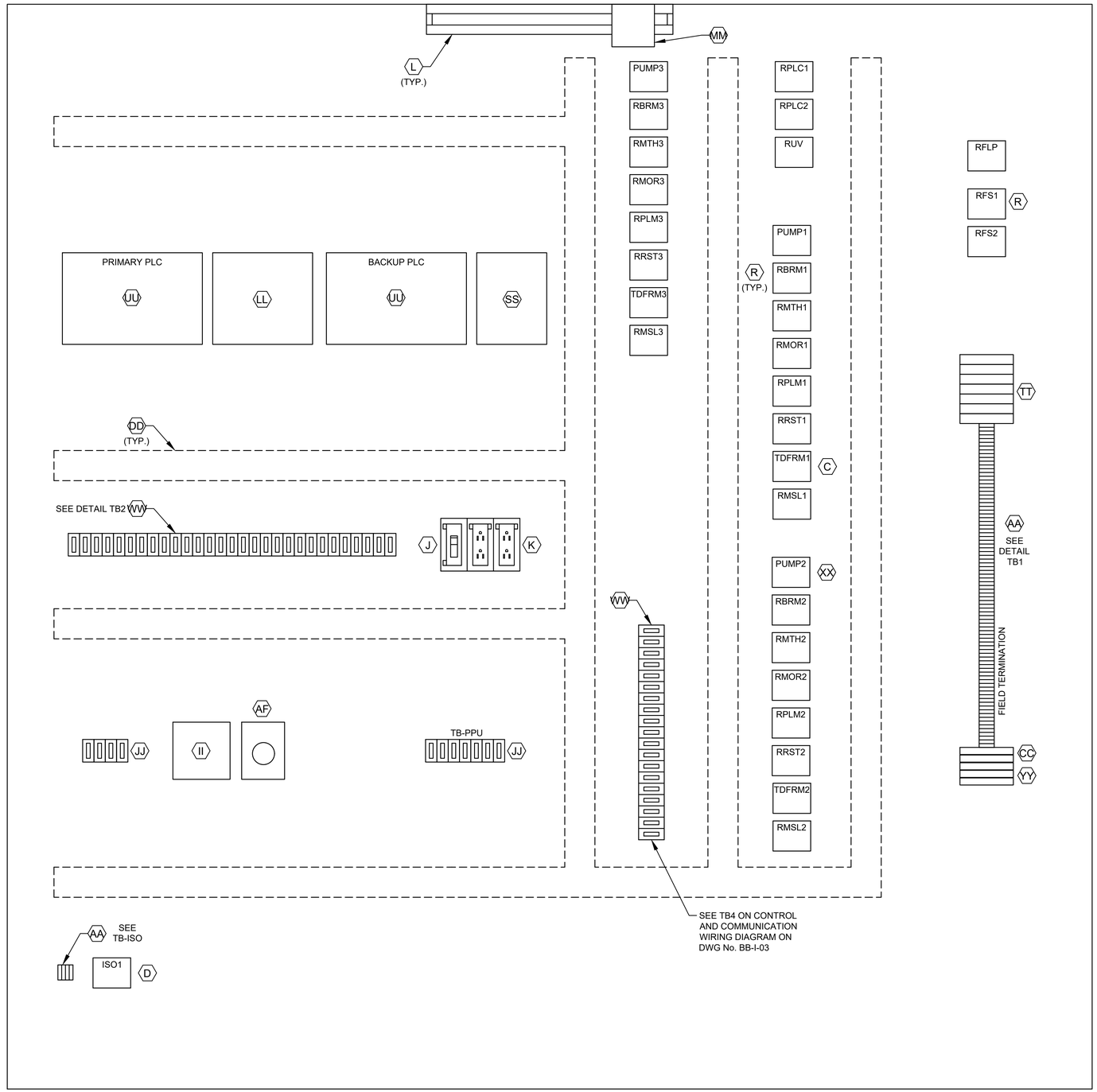

CONTROL PANEL
ELEVATION

L1A
L1N
SPARE
3
3N
49
50
51
52
53
54
1004
1
24V-
24V-
1002
2
11
1001
1001A
12
1003
1003A
1002
1004
18
3N
19
20
36
36N
41
42
43
44
SPARE
L1A
L1N
103
104
105
106
107
108
110
113
115
116
119
SPARE
203
204
205
206
207
208
210
213
215
216
219

DETAIL TB1

ALL L AND N FOR EACH PUMP CONTROL TO BE FUSED

303
304
305
306
307
308
310
313
315
316
319
36A
37A
50
52
54
52A
54A
L+
M
35B
38B
41B
47B
13B
13AB
13GB
L+
M
14B
14AB
14GB
L+
M
13
13A
13G
14
14A
14G
SPARE
18
SPARE
28
29
32
35B
33
42
44
SPARE
103
104
115
109
110
118
120
121
122
123
SPARE
209
210
211
218
220
222
223

DETAIL TB2

1500
1501
1503
1504

DETAIL TB-ISO

LEGEND	
TAG	DESCRIPTION
RMTH	MOTOR HIGH TEMPERATURE ALARM RELAY
RPLM	PLC PUMP RUN RELAY
RRST	PUMP RESET AUX RELAY
RPLC	PLC MODE AUX RELAY
RMOR	MOTOR OVERLOAD ALARM RELAY
RBRM	BACKUP SYSTEM RUN RELAY
RUV	UNDER VOLTAGE RELAY
ISO	INTRINSICALLY SAFE RELAY
RFS	PUMP RUN FLOAT SWITCH RELAY
TDFRM	TIMER FLOAT SWITCH RUN RELAY
RMSL	MOTOR SEAL LEAK ALARM RELAY
RFLP	FLOAT LOCKOUT PUMP RELAY

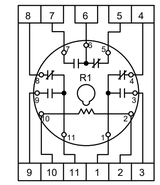

RELAY DETAIL
ITEM R

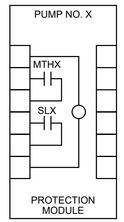

PUMP PROTECTION MODULE
DETAIL, ITEM XX

NOTE: REPLACE "X" WITH APPROPRIATE PUMP NO.

NOTES:

1. SEE SHEET BB-I-04 FOR EQUIPMENT SCHEDULE.

NO.	DATE	REVISION	APP.

NOTICE:
FOR YOUR SAFETY, YOU ARE REQUIRED BY TEXAS LAW TO CALL 811 AT LEAST 48 HOURS BEFORE YOU DIG SO THAT UNDERGROUND LINES CAN BE MARKED. THIS SIGNATURE DOES NOT FULFILL YOUR OBLIGATION TO CALL 811

VERIFICATION OF PRIVATE UTILITY LINES

Date

CenterPoint Energy natural gas utilities shown. (Gas service lines are not shown). This signature not be used for conflict verification.

Signature valid for six months.

Date

CenterPoint Energy/UNDERGROUND Electrical Facilities Verification ONLY. (This signature verifies existing underground facilities – not to be used for conflict verification)

Signature valid for six months.

Date

Approved for AT&T underground conduit facilities only.
Signature valid for one year.

PAPE–DAWSON
2107 CITYWEST BLVD, 3RD FLR I HOUSTON, TX 77042 I 713.428.2400
TEXAS ENGINEERING FIRM #470 I TEXAS SURVEYING FIRM #10028800

GAI
Gupta & Associates, Inc.
CONSULTING ENGINEERING
Registration No. F-2593
302 Dennis St.
Houston, Texas 77006
Tel: 713-636-2936
Fax: 713-636-2987
email: hforouzan@gaiconsulting.com

THIS DOCUMENT IS RELEASED FOR INTERIM REVIEW UNDER THE AUTHORIZATION OF HOSS FOROUZAN, P.E. (#77748) AND IS **NOT TO BE USED FOR CONSTRUCTION.**

SURVEYED BY:
PAPE–DAWSON ENGINEERS
FB NO. 24–018

CITY OF HOUSTON
HOUSTON PUBLIC WORKS

LIFT STATION REHABILITATION AND RECONSTRUCTION
BEN'S BRANCH, WOODLAND RIDGE, ELMWOOD HILLS, FOREST SHORES, TRAIL RIVER, RIVERLAWN

INSTRUMENTATION

BEN'S BRANCH LIFT STATION CONTROL CABINET EQUIPMENT LAYOUT–II

WBS NUMBER	FOR CITY OF HOUSTON USE ONLY
R–000267–0180–3	
DRAWING SCALE	
AS NOTED	
CITY OF HOUSTON PM	
BRENDA JOHNSON P.E.	
SHEET NO. XX OF XX	

BB–I–06

FILE PATH: O:\H8107_Lift Station Rehabilitation And Reconstruction (Pape Dawson)\6 Drawings\Instrumentation And Control\Working\Ben's Branch\H8107_BB–I–06.dwg

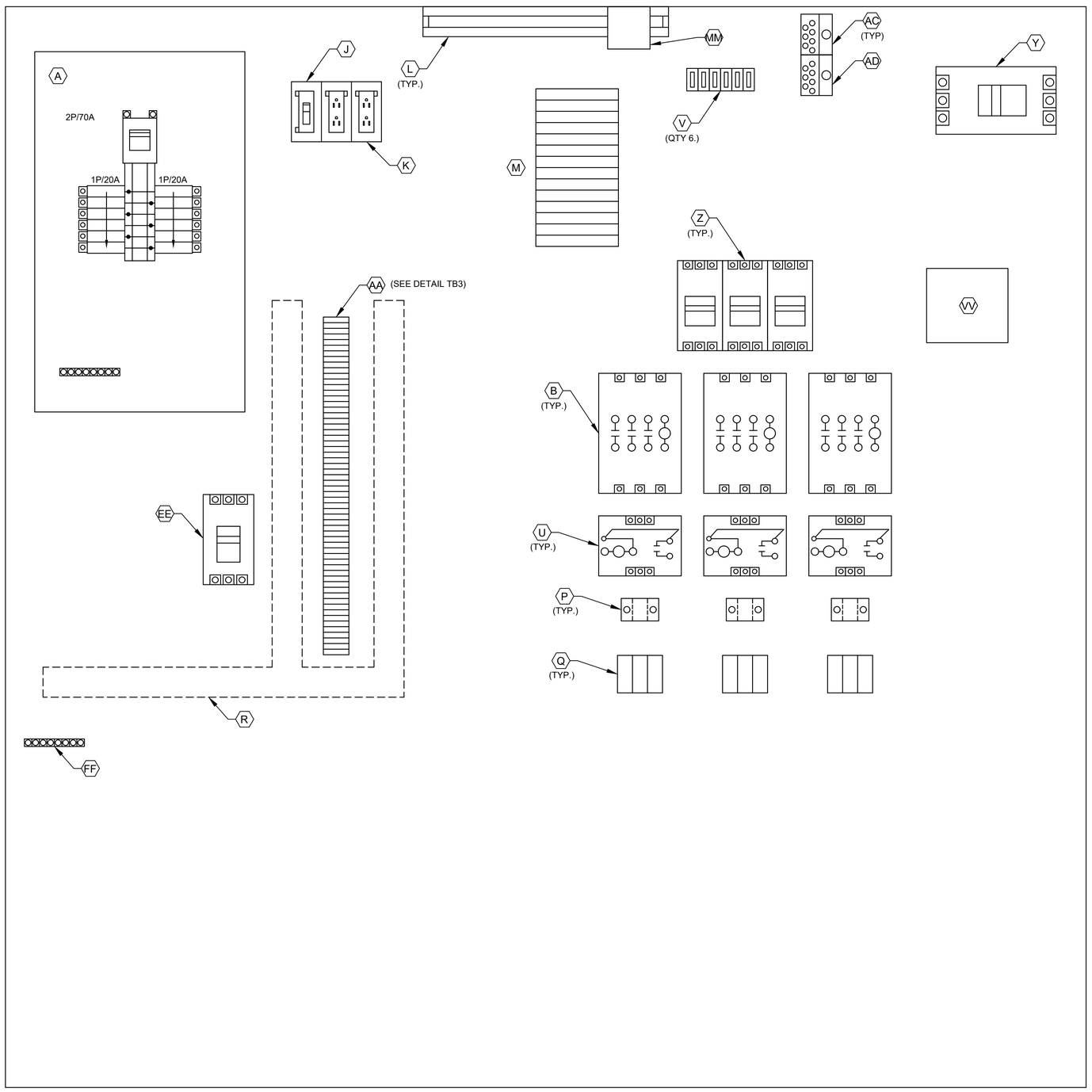

POWER PANEL ELEVATION

3
18
L1A
L1N
SPARE
SPARE
103
104
105
106
107
108
110
113
115
116
119
SPARE
203
204
205
206
207
208
210
213
215
216
216
219
SPARE
303
304
305
306
307
308
310
313
315
316
316
319
SPARE
SPARE
SPARE
SPARE
SPARE
SPARE
SPARE
SPARE
SPARE
SPARE
SPARE

DETAIL TB3

NOTES:

1. SEE SHEET BB-I-04 FOR EQUIPMENT SCHEDULE.

NO.	DATE	REVISION	APP.

NOTICE:
FOR YOUR SAFETY, YOU ARE REQUIRED BY TEXAS LAW TO CALL 811 AT LEAST 48 HOURS BEFORE YOU DIG SO THAT UNDERGROUND LINES CAN BE MARKED. THIS SIGNATURE DOES NOT FULFILL YOUR OBLIGATION TO CALL 811

VERIFICATION OF PRIVATE UTILITY LINES

Date

CenterPoint Energy natural gas utilities shown. (Gas service lines are not shown). This signature not be used for conflict verification.

Signature valid for six months.

Date

CenterPoint Energy/UNDERGROUND Electrical Facilities Verification ONLY. (This signature verifies existing underground facilities – not to be used for conflict verification)

Signature valid for six months.

Date

Approved for AT&T underground conduit facilities only.
Signature valid for one year.

PAPE-DAWSON
2107 CITYWEST BLVD, 3RD FLR I HOUSTON, TX 77042 I 713.428.2400
TEXAS ENGINEERING FIRM #470 I TEXAS SURVEYING FIRM #10028800

GAI
Gupta & Associates, Inc.
CONSULTING ENGINEERING
Registration No. F-2593
302 Dennis St.
Houston, Texas 77006
Tel: 713-636-2936
Fax: 713-636-2987
email: hforouzan@gaiconsulting.com

SURVEYED BY:
PAPE-DAWSON ENGINEERS
FB NO. 24-018

THIS DOCUMENT IS RELEASED FOR INTERIM REVIEW UNDER THE AUTHORIZATION OF HOSS FOROUZAN, P.E. (#77748) AND IS **NOT TO BE USED FOR CONSTRUCTION.**

CITY OF HOUSTON
HOUSTON PUBLIC WORKS

LIFT STATION REHABILITATION AND RECONSTRUCTION
BEN'S BRANCH, WOODLAND RIDGE, ELMWOOD HILLS, FOREST SHORES, TRAIL RIVER, RIVERLAWN

INSTRUMENTATION

BEN'S BRANCH LIFT STATION CONTROL CABINET EQUIPMENT LAYOUT–III

WBS NUMBER	FOR CITY OF HOUSTON USE ONLY
R-000267-0180-3	
DRAWING SCALE	
AS NOTED	
CITY OF HOUSTON PM	
BRENDA JOHNSON P.E.	
SHEET NO. XX OF XX	

BB-I-07

FILE PATH: O:\H8107_Lift Station Rehabilitation And Reconstruction (Pape Dawson)\6 Drawings\Instrumentation And Control\Working\Ben's Branch\H8107_BB-I-07.dwg

FILE PATH: O:\H8107_Lift Station Rehabilitation And Reconstruction (Pape Dawson)\6 Drawings\Instrumentation And Control\Working\Ben's Branch\H8107_BB—I—08.dwg

FIELD | CONTROL PANEL: DOOR | CONTROL PANEL: INTERIOR PANEL | CONTROL PANEL: PLC

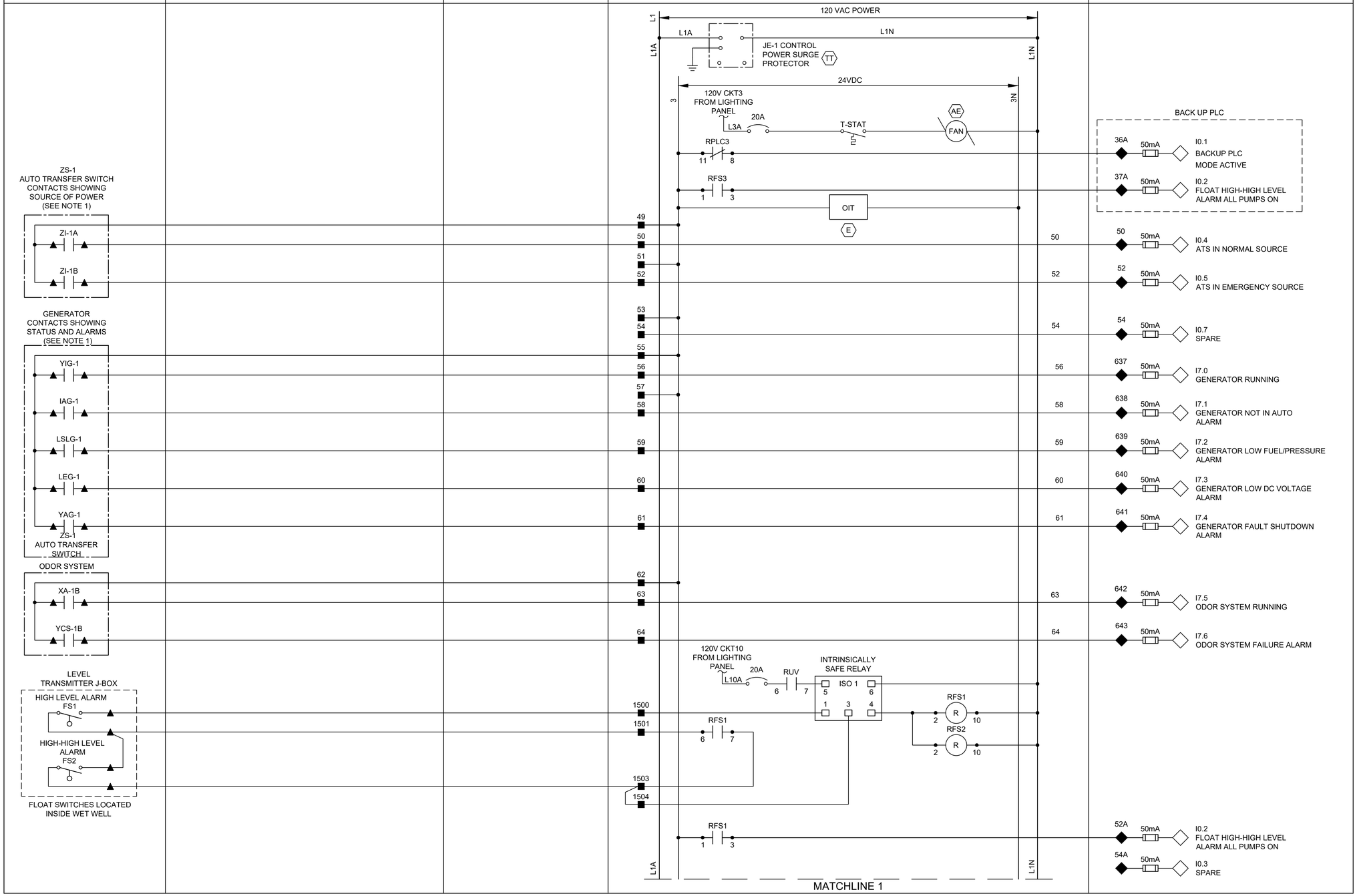

LEGEND

- △ DEVICE OR FIELD TERMINAL LOCATED AT MOTOR
- ✳ DEVICE OR FIELD TERMINAL LOCATED REMOTE
- □ DEVICE OR FIELD TERMINAL LOCATED AT MCC/POWER PANEL
- ■ FIELD TERMINAL LOCATED AT CONTROL PANEL
- ▲ REMOTE TERMINAL
- ● DEVICE TERMINAL NO.
- ◆ PLC INTERFACE TERMINAL

NO.	DATE	REVISION	APP.

NOTES:

1. PROVIDE AUTO TRANSFER SWITCH DRY CONTACT.
2. ALL FLOAT CONTROL CIRCUIT WIRES COLOR SHALL BE YELLOW.

NOTICE:
FOR YOUR SAFETY, YOU ARE REQUIRED BY TEXAS LAW TO CALL 811 AT LEAST 48 HOURS BEFORE YOU DIG SO THAT UNDERGROUND LINES CAN BE MARKED. THIS SIGNATURE DOES NOT FULFILL YOUR OBLIGATION TO CALL 811

VERIFICATION OF PRIVATE UTILITY LINES

Date

CenterPoint Energy natural gas utilities shown. (Gas service lines are not shown). This signature not be used for conflict verification.

Signature valid for six months.

Date

CenterPoint Energy/UNDERGROUND Electrical Facilities Verification ONLY. (This signature verifies existing underground facilities – not to be used for conflict verification)

Signature valid for six months.

Date

Approved for AT&T underground conduit facilities only.
Signature valid for one year.

PAPE–DAWSON
2107 CITYWEST BLVD, 3RD FLR I HOUSTON, TX 77042 I 713.428.2400
TEXAS ENGINEERING FIRM #470 I TEXAS SURVEYING FIRM #10028800

GAI
Gupta & Associates, Inc.
CONSULTING ENGINEERING
Registration No. F-2593
302 Dennis St.
Houston, Texas 77006
Tel: 713-636-2936
Fax: 713-636-2987
email: hforouzan@gaiconsulting.com

SURVEYED BY:
PAPE–DAWSON ENGINEERS
FB NO. 24–018

THIS DOCUMENT IS RELEASED FOR INTERIM REVIEW UNDER THE AUTHORIZATION OF HOSS FOROUZAN, P.E. (#77748) AND IS **NOT TO BE USED FOR CONSTRUCTION.**

CITY OF HOUSTON
HOUSTON PUBLIC WORKS

LIFT STATION REHABILITATION AND RECONSTRUCTION
BEN'S BRANCH, WOODLAND RIDGE, ELMWOOD HILLS, FOREST SHORES, TRAIL RIVER, RIVERLAWN

INSTRUMENTATION

BEN'S BRANCH LIFT STATION CONTROL PANEL CONTROL WIRING DIAGRAM–I

WBS NUMBER	FOR CITY OF HOUSTON USE ONLY
R–000267–0180–3	
DRAWING SCALE	
AS NOTED	
CITY OF HOUSTON PM	
BRENDA JOHNSON P.E.	
SHEET NO. XX OF XX	

BB–I–08

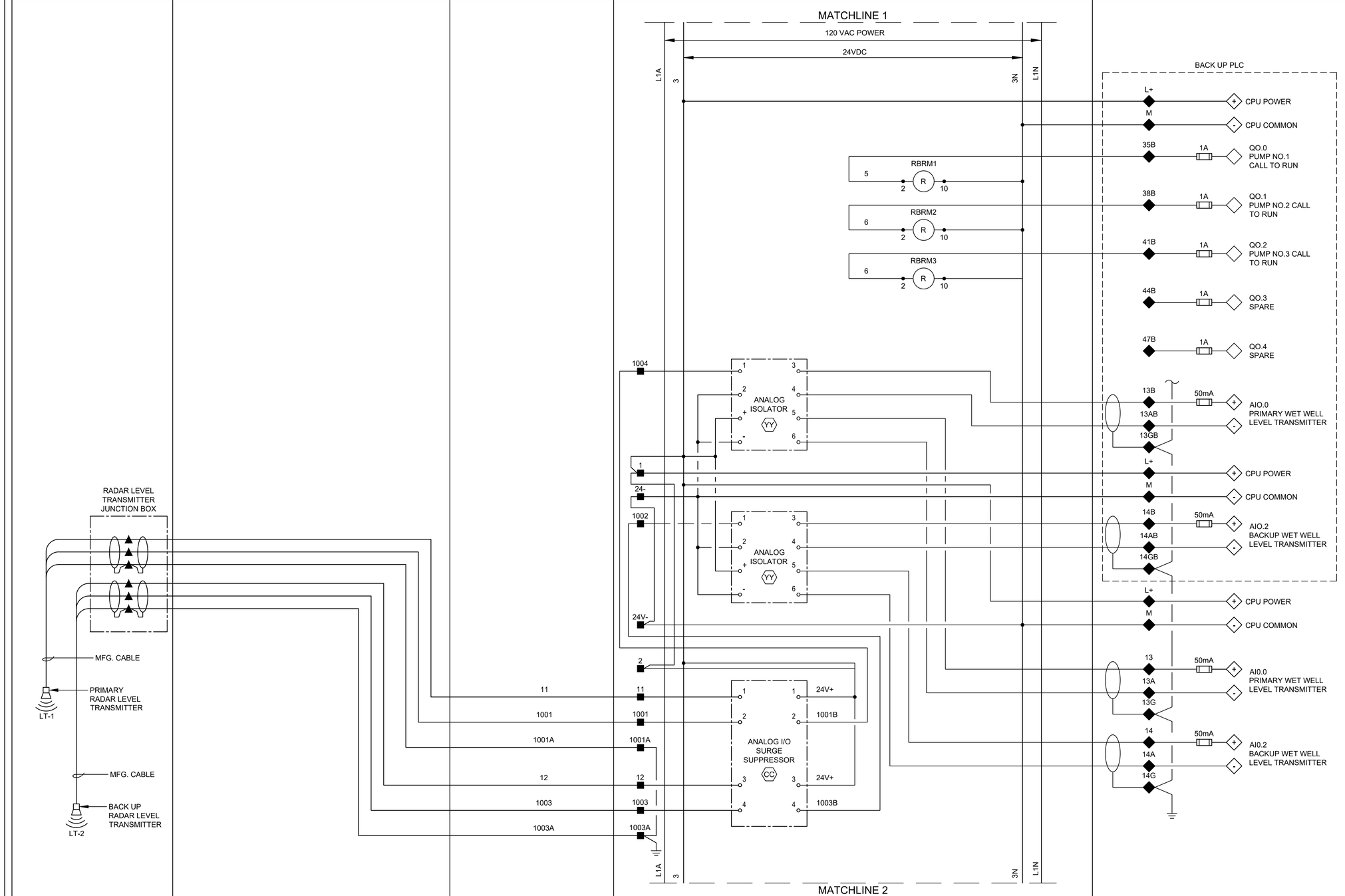

LEGEND

- △ DEVICE OR FIELD TERMINAL LOCATED AT MOTOR
- ✳ DEVICE OR FIELD TERMINAL LOCATED REMOTE
- □ DEVICE OR FIELD TERMINAL LOCATED AT MCC/POWER PANEL
- ■ FIELD TERMINAL LOCATED AT CONTROL PANEL
- ▲ REMOTE TERMINAL
- ● DEVICE TERMINAL NO.
- ◆ PLC INTERFACE TERMINAL

NO.	DATE	REVISION	APP.

NOTICE:
FOR YOUR SAFETY, YOU ARE REQUIRED BY TEXAS LAW TO CALL 811 AT LEAST 48 HOURS BEFORE YOU DIG SO THAT UNDERGROUND LINES CAN BE MARKED. THIS SIGNATURE DOES NOT FULFILL YOUR OBLIGATION TO CALL 811

VERIFICATION OF PRIVATE UTILITY LINES

Date

CenterPoint Energy natural gas utilities shown. (Gas service lines are not shown). This signature not be used for conflict verification.

Signature valid for six months.

Date

CenterPoint Energy/UNDERGROUND Electrical Facilities Verification ONLY. (This signature verifies existing underground facilities – not to be used for conflict verification)

Signature valid for six months.

Date

Approved for AT&T underground conduit facilities only.
Signature valid for one year.

PAPE–DAWSON
2107 CITYWEST BLVD, 3RD FLR I HOUSTON, TX 77042 I 713.428.2400
TEXAS ENGINEERING FIRM #470 I TEXAS SURVEYING FIRM #10028800

GAI
Gupta & Associates, Inc.
CONSULTING ENGINEERING
Registration No. F-2593
302 Dennis St.
Houston, Texas 77006
Tel: 713-636-2936
Fax: 713-636-2987
email: hforouzan@gaiconsulting.com

THIS DOCUMENT IS RELEASED FOR INTERIM REVIEW UNDER THE AUTHORIZATION OF HOSS FOROUZAN, P.E. (#77748) AND IS **NOT TO BE USED FOR CONSTRUCTION.**

SURVEYED BY:
PAPE–DAWSON ENGINEERS
FB NO. 24–018

CITY OF HOUSTON
HOUSTON PUBLIC WORKS

LIFT STATION REHABILITATION AND RECONSTRUCTION
BEN'S BRANCH, WOODLAND RIDGE, ELMWOOD HILLS, FOREST SHORES, TRAIL RIVER, RIVERLAWN

INSTRUMENTATION

BEN'S BRANCH LIFT STATION CONTROL PANEL CONTROL WIRING DIAGRAM–II

WBS NUMBER	FOR CITY OF HOUSTON USE ONLY
R–000267–0180–3	
DRAWING SCALE	
AS NOTED	
CITY OF HOUSTON PM	
BRENDA JOHNSON P.E.	
SHEET NO. XX OF XX	

BB–I–09

FILE PATH: O:\H8107_Lift Station Rehabilitation And Reconstruction (Pape Dawson)\6 Drawings\Instrumentation And Control\Working\Ben's Branch\H8107_BB–I–09.dwg

FILE PATH: O:\H8107_Lift Station Rehabilitation And Reconstruction (Pape Dawson)\6 Drawings\Instrumentation And Control\Working\Ben's Branch\H8107_BB-I-10.dwg

FIELD	POWER PANEL	CONTROL PANEL		
		DOOR	INTERIOR PANEL	PLC

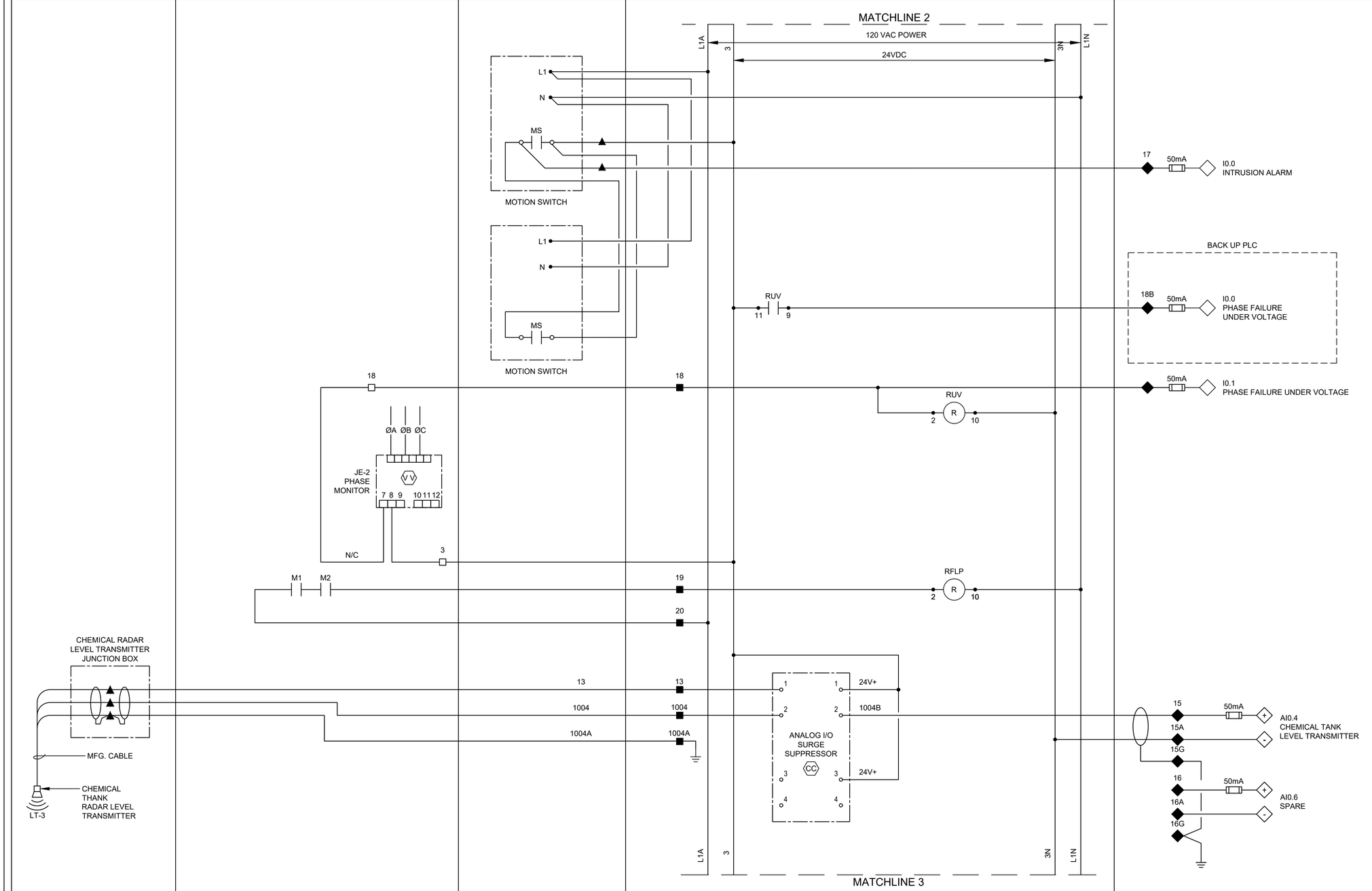

LEGEND

- △ DEVICE OR FIELD TERMINAL LOCATED AT MOTOR
- ✳ DEVICE OR FIELD TERMINAL LOCATED REMOTE
- □ DEVICE OR FIELD TERMINAL LOCATED AT MCC/POWER PANEL
- ■ FIELD TERMINAL LOCATED AT CONTROL PANEL
- ▲ REMOTE TERMINAL
- ● DEVICE TERMINAL NO.
- ◆ PLC INTERFACE TERMINAL

NO.	DATE	REVISION	APP.

NOTES:

1. PROVIDE ONE LIMIT SWITCH PER EXTERIOR CONTROL PANEL AND POWER PANEL DOOR, WIRED IN PARALLEL.

NOTICE:
FOR YOUR SAFETY, YOU ARE REQUIRED BY TEXAS LAW TO CALL 811 AT LEAST 48 HOURS BEFORE YOU DIG SO THAT UNDERGROUND LINES CAN BE MARKED. THIS SIGNATURE DOES NOT FULFILL YOUR OBLIGATION TO CALL 811

VERIFICATION OF PRIVATE UTILITY LINES

Date

CenterPoint Energy natural gas utilities shown. (Gas service lines are not shown). This signature not be used for conflict verification.

Signature valid for six months.

Date

CenterPoint Energy/UNDERGROUND Electrical Facilities Verification ONLY. (This signature verifies existing underground facilities – not to be used for conflict verification)

Signature valid for six months.

Date

Approved for AT&T underground conduit facilities only.
Signature valid for one year.

PAPE-DAWSON
2107 CITYWEST BLVD, 3RD FLR I HOUSTON, TX 77042 I 713.428.2400
TEXAS ENGINEERING FIRM #470 I TEXAS SURVEYING FIRM #10028800

GAI
Gupta & Associates, Inc.
CONSULTING ENGINEERING
Registration No. F-2593
302 Dennis St.
Houston, Texas 77006
Tel: 713-636-2936
Fax: 713-636-2987
email: hforouzan@gaiconsulting.com

SURVEYED BY:
PAPE-DAWSON ENGINEERS
FB NO. 24-018

THIS DOCUMENT IS RELEASED FOR INTERIM REVIEW UNDER THE AUTHORIZATION OF HOSS FOROUZAN, P.E. (#77748) AND IS **NOT TO BE USED FOR CONSTRUCTION.**

CITY OF HOUSTON
HOUSTON PUBLIC WORKS

LIFT STATION REHABILITATION AND RECONSTRUCTION
BEN'S BRANCH, WOODLAND RIDGE, ELMWOOD HILLS, FOREST SHORES, TRAIL RIVER, RIVERLAWN

INSTRUMENTATION

BEN'S BRANCH LIFT STATION CONTROL PANEL CONTROL WIRING DIAGRAM-III

WBS NUMBER	FOR CITY OF HOUSTON USE ONLY
R-000267-0180-3	
DRAWING SCALE	
AS NOTED	
CITY OF HOUSTON PM	
BRENDA JOHNSON P.E.	
SHEET NO. XX OF XX	

BB-I-10

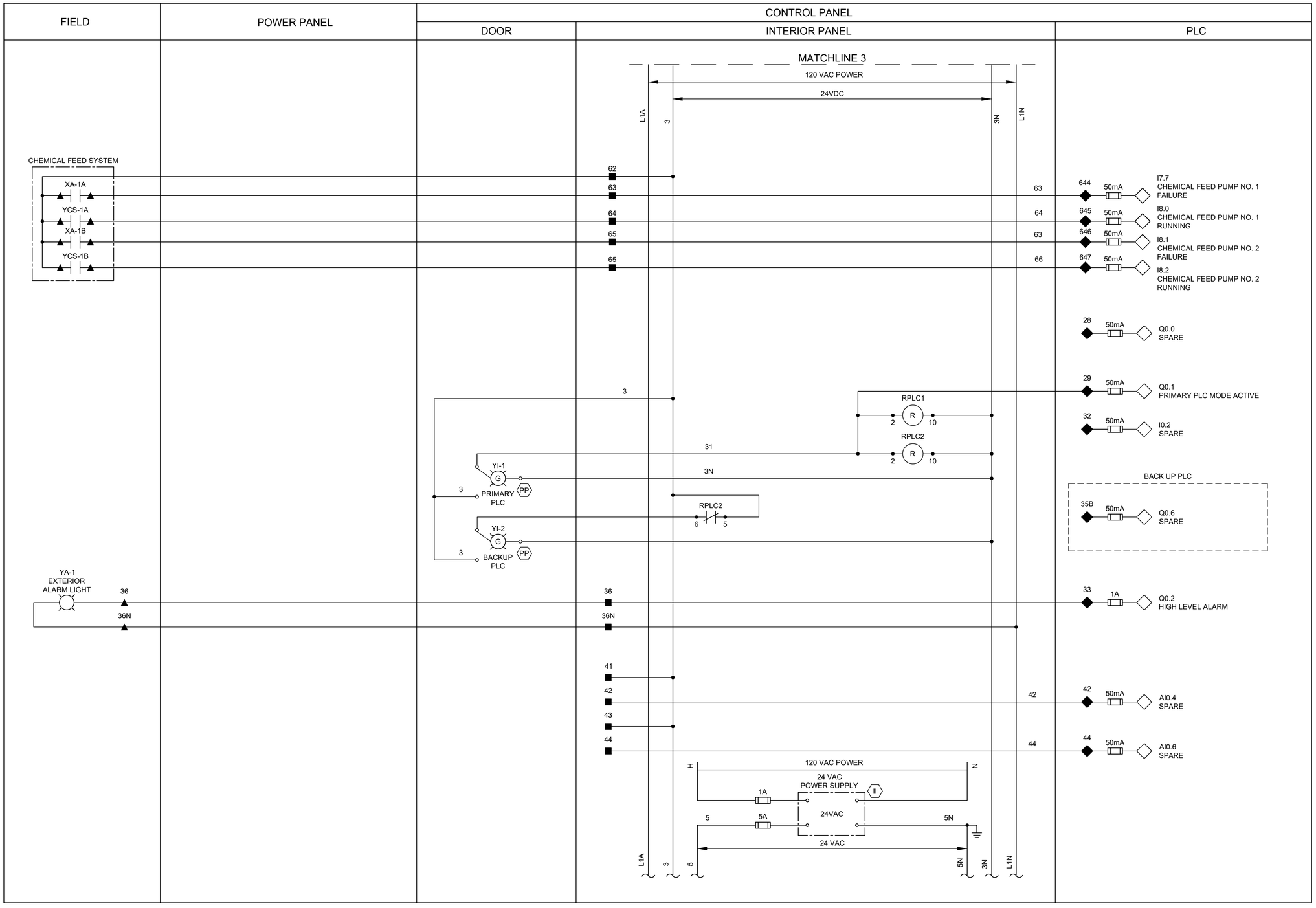

LEGEND

- △ DEVICE OR FIELD TERMINAL LOCATED AT MOTOR
- ✳ DEVICE OR FIELD TERMINAL LOCATED REMOTE
- □ DEVICE OR FIELD TERMINAL LOCATED AT MCC/POWER PANEL
- ■ FIELD TERMINAL LOCATED AT CONTROL PANEL
- ▲ REMOTE TERMINAL
- ● DEVICE TERMINAL NO.
- ◆ PLC INTERFACE TERMINAL

NO.	DATE	REVISION	APP.

NOTICE:
FOR YOUR SAFETY, YOU ARE REQUIRED BY TEXAS LAW TO CALL 811 AT LEAST 48 HOURS BEFORE YOU DIG SO THAT UNDERGROUND LINES CAN BE MARKED. THIS SIGNATURE DOES NOT FULFILL YOUR OBLIGATION TO CALL 811

VERIFICATION OF PRIVATE UTILITY LINES

Date

CenterPoint Energy natural gas utilities shown. (Gas service lines are not shown). This signature not be used for conflict verification.

Signature valid for six months.

Date

CenterPoint Energy/UNDERGROUND Electrical Facilities Verification ONLY. (This signature verifies existing underground facilities – not to be used for conflict verification)

Signature valid for six months.

Date

Approved for AT&T underground conduit facilities only.
Signature valid for one year.

PAPE–DAWSON
2107 CITYWEST BLVD, 3RD FLR I HOUSTON, TX 77042 I 713.428.2400
TEXAS ENGINEERING FIRM #470 I TEXAS SURVEYING FIRM #10028800

GAI
Gupta & Associates, Inc.
CONSULTING ENGINEERING
Registration No. F-2593
302 Dennis St.
Houston, Texas 77006
Tel: 713-636-2936
Fax: 713-636-2987
email: hforouzan@gaiconsulting.com

THIS DOCUMENT IS RELEASED FOR INTERIM REVIEW UNDER THE AUTHORIZATION OF HOSS FOROUZAN, P.E. (#77748) AND IS **NOT TO BE USED FOR CONSTRUCTION.**

SURVEYED BY:
PAPE–DAWSON ENGINEERS
FB NO. 24–018

CITY OF HOUSTON
HOUSTON PUBLIC WORKS

LIFT STATION REHABILITATION AND RECONSTRUCTION
BEN'S BRANCH, WOODLAND RIDGE, ELMWOOD HILLS, FOREST SHORES, TRAIL RIVER, RIVERLAWN

INSTRUMENTATION

BEN'S BRANCH LIFT STATION CONTROL PANEL CONTROL WIRING DIAGRAM–IV

WBS NUMBER	FOR CITY OF HOUSTON USE ONLY
R–000267–0180–3	
DRAWING SCALE	
AS NOTED	
CITY OF HOUSTON PM	
BRENDA JOHNSON P.E.	
SHEET NO. XX OF XX	

BB–I–11

FILE PATH: O:\H8107_Lift Station Rehabilitation And Reconstruction (Pape Dawson)\6 Drawings\Instrumentation And Control\Working\Ben's Branch\H8107_BB–I–11.dwg

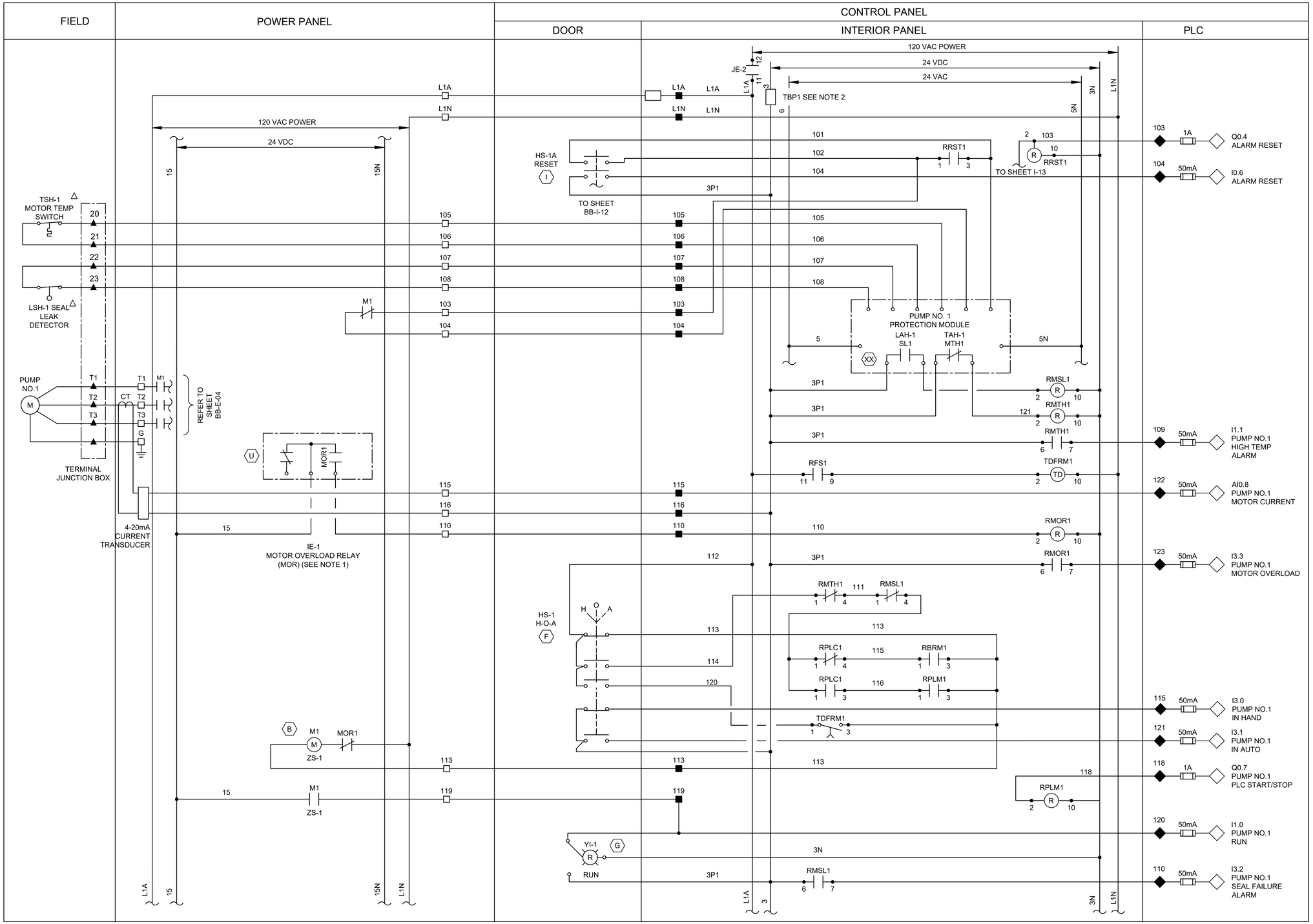

LEGEND

- △ DEVICE OR FIELD TERMINAL LOCATED AT MOTOR
- ✳ DEVICE OR FIELD TERMINAL LOCATED REMOTE
- □ DEVICE OR FIELD TERMINAL LOCATED AT MCC/POWER PANEL
- ■ FIELD TERMINAL LOCATED AT CONTROL PANEL
- ▲ REMOTE TERMINAL
- ● DEVICE TERMINAL NO.
- ◆ PLC INTERFACE TERMINAL

NOTES:

1. MOTOR OVERLOAD RELAY OUTPUT CONTACT SHOWN IS NORMALLY CLOSED WHEN RELAY IS DE-ENERGIZED, OPEN WHEN ENERGIZED, AND CLOSED WHEN IN ALARM. VERIFY OPERATION OF RELAY PROVIDED AND ADJUST CONNECTION OF RMOR AUXILIARY RELAYS.
2. FUSED TERMINAL ON TERMINAL BLOCK TB4 SEE CONTROL POWER AND COMMUNICATION WIRING DIAGRAM DRAWING NO. BB-I-03.
3. ALL FLOAT CONTROL CIRCUIT WIRES COLOR SHALL BE YELLOW.

NOTICE:
FOR YOUR SAFETY, YOU ARE REQUIRED BY TEXAS LAW TO CALL 811 AT LEAST 48 HOURS BEFORE YOU DIG SO THAT UNDERGROUND LINES CAN BE MARKED. THIS SIGNATURE DOES NOT FULFILL YOUR OBLIGATION TO CALL 811

VERIFICATION OF PRIVATE UTILITY LINES

Date

CenterPoint Energy natural gas utilities shown. (Gas service lines are not shown). This signature not be used for conflict verification.

Signature valid for six months.

Date

CenterPoint Energy/UNDERGROUND Electrical Facilities Verification ONLY. (This signature verifies existing underground facilities – not to be used for conflict verification)

Signature valid for six months.

Date

Approved for AT&T underground conduit facilities only. Signature valid for one year.

PAPE–DAWSON
2107 CITYWEST BLVD, 3RD FLR I HOUSTON, TX 77042 I 713.428.2400
TEXAS ENGINEERING FIRM #470 I TEXAS SURVEYING FIRM #10028800

GAI
Gupta & Associates, Inc.
CONSULTING ENGINEERING
Registration No. F-2593
302 Dennis St.
Houston, Texas 77006
Tel: 713-636-2936
Fax: 713-636-2987
email: hforouzan@gaiconsulting.com

THIS DOCUMENT IS RELEASED FOR INTERIM REVIEW UNDER THE AUTHORIZATION OF HOSS FOROUZAN, P.E. (#77748) AND IS **NOT TO BE USED FOR CONSTRUCTION.**

SURVEYED BY:
PAPE–DAWSON ENGINEERS
FB NO. 24–018

CITY OF HOUSTON
HOUSTON PUBLIC WORKS

LIFT STATION REHABILITATION AND RECONSTRUCTION
BEN'S BRANCH, WOODLAND RIDGE, ELMWOOD HILLS, FOREST SHORES, TRAIL RIVER, RIVERLAWN

INSTRUMENTATION

BEN'S BRANCH LIFT STATION PUMP NO.1 CONTROL WIRING DIAGRAM

WBS NUMBER	FOR CITY OF HOUSTON USE ONLY
R–000267–0180–3	
DRAWING SCALE	
AS NOTED	
CITY OF HOUSTON PM	
BRENDA JOHNSON P.E.	
SHEET NO. XX OF XX	

BB–I–12

NO.	DATE	REVISION	APP.

FILE PATH: O:\H8107_Lift Station Rehabilitation And Reconstruction (Pape Dawson)\6 Drawings\Instrumentation And Control\Working\Ben's Branch\H8107_BB–I–12.dwg

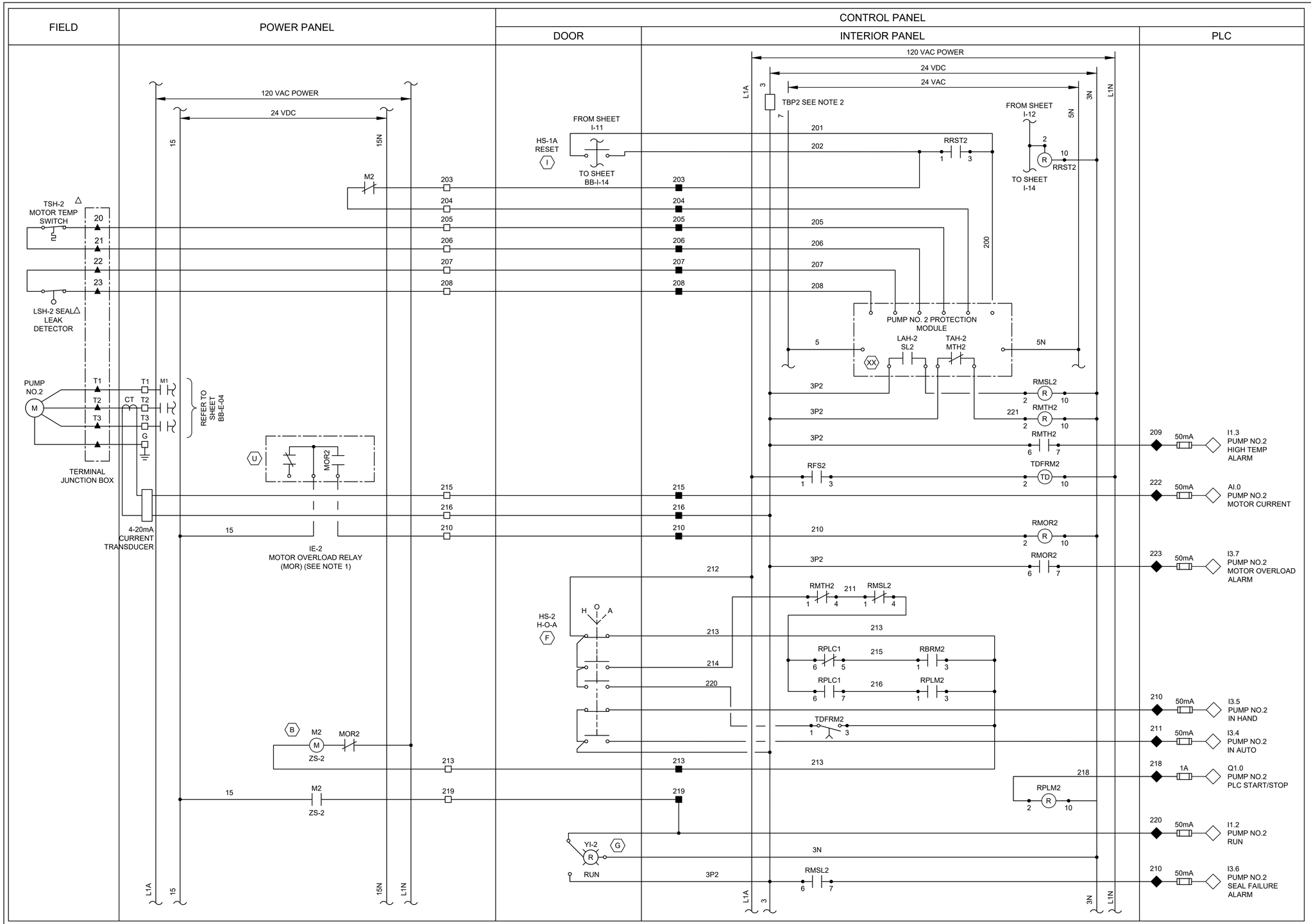

LEGEND

- △ DEVICE OR FIELD TERMINAL LOCATED AT MOTOR
- ✳ DEVICE OR FIELD TERMINAL LOCATED REMOTE
- □ DEVICE OR FIELD TERMINAL LOCATED AT MCC/POWER PANEL
- ■ FIELD TERMINAL LOCATED AT CONTROL PANEL
- ▲ REMOTE TERMINAL
- ● DEVICE TERMINAL NO.
- ◆ PLC INTERFACE TERMINAL

NOTES:

1. MOTOR OVERLOAD RELAY OUTPUT CONTACT SHOWN IS NORMALLY CLOSED WHEN RELAY IS DE-ENERGIZED, OPEN WHEN ENERGIZED, AND CLOSED WHEN IN ALARM. VERIFY OPERATION OF RELAY PROVIDED AND ADJUST CONNECTION OF RMOR AUXILIARY RELAYS.
2. FUSED TERMINAL ON TERMINAL BLOCK TB4 SEE CONTROL POWER AND COMMUNICATION WIRING DIAGRAM DRAWING NO. BB-I-03.
3. ALL FLOAT CONTROL CIRCUIT WIRES COLOR SHALL BE YELLOW.

NOTICE:
FOR YOUR SAFETY, YOU ARE REQUIRED BY TEXAS LAW TO CALL 811 AT LEAST 48 HOURS BEFORE YOU DIG SO THAT UNDERGROUND LINES CAN BE MARKED. THIS SIGNATURE DOES NOT FULFILL YOUR OBLIGATION TO CALL 811

VERIFICATION OF PRIVATE UTILITY LINES

Date

CenterPoint Energy natural gas utilities shown. (Gas service lines are not shown). This signature not be used for conflict verification.

Signature valid for six months.

Date

CenterPoint Energy/UNDERGROUND Electrical Facilities Verification ONLY. (This signature verifies existing underground facilities – not to be used for conflict verification)

Signature valid for six months.

Date

Approved for AT&T underground conduit facilities only. Signature valid for one year.

PAPE–DAWSON
2107 CITYWEST BLVD, 3RD FLR I HOUSTON, TX 77042 I 713.428.2400
TEXAS ENGINEERING FIRM #470 I TEXAS SURVEYING FIRM #10028800

GAI
Gupta & Associates, Inc.
CONSULTING ENGINEERING
Registration No. F-2593
302 Dennis St.
Houston, Texas 77006
Tel: 713-636-2936
Fax: 713-636-2987
email: hforouzan@gaiconsulting.com

THIS DOCUMENT IS RELEASED FOR INTERIM REVIEW UNDER THE AUTHORIZATION OF HOSS FOROUZAN, P.E. (#77748) AND IS **NOT TO BE USED FOR CONSTRUCTION.**

SURVEYED BY:
PAPE–DAWSON ENGINEERS
FB NO. 24–018

CITY OF HOUSTON
HOUSTON PUBLIC WORKS

LIFT STATION REHABILITATION AND RECONSTRUCTION
BEN'S BRANCH, WOODLAND RIDGE, ELMWOOD HILLS, FOREST SHORES, TRAIL RIVER, RIVERLAWN

INSTRUMENTATION

BEN'S BRANCH LIFT STATION PUMP NO.2 CONTROL WIRING DIAGRAM

WBS NUMBER	FOR CITY OF HOUSTON USE ONLY
R–000267–0180–3	
DRAWING SCALE	
AS NOTED	
CITY OF HOUSTON PM	
BRENDA JOHNSON P.E.	
SHEET NO. XX OF XX	

BB–I–13

NO.	DATE	REVISION	APP.

FILE PATH: O:\H8107_Lift Station Rehabilitation And Reconstruction (Pape Dawson)\6 Drawings\Instrumentation And Control\Working\Ben's Branch\H8107_BB–I–13.dwg

FILE PATH: O:\H8107_Lift Station Rehabilitation And Reconstruction (Pape Dawson)\6 Drawings\Instrumentation And Control\Working\Ben's Branch\H8107_BB-I-14.dwg

FIELD | POWER PANEL | CONTROL PANEL: DOOR | CONTROL PANEL: INTERIOR PANEL | PLC

120 VAC POWER
24 VDC
24 VAC
L1A
3
9
TBP3 SEE NOTE 2
3N
5N
L1N
15
15N
M3
HS-1A RESET
FROM SHEET BB-I-13
FROM SHEET I-513
RRST3
TSH-3 MOTOR TEMP SWITCH
LSH-3 SEAL LEAK DETECTOR
PUMP NO.3
TERMINAL JUNCTION BOX
REFER TO SHEET BB-E-04
MOR3
4-20mA CURRENT TRANSDUCER
IE-3 MOTOR OVERLOAD RELAY (MOR) (SEE NOTE 1)
PUMP NO. 3 PROTECTION MODULE
LAH-3 SL3
TAH-3 MTH3
RMSL3
RMTH3
RFS2
TDFRM3
RMOR3
RPLC2
RBRM3
RPLM3
RFLP
HS-3 H-O-A
RUN
YI-3
ZS-3

309	50mA	I1.5 PUMP NO. 3 HIGH TEMPERATURE ALARM
322	50mA	AI1.2 PUMP NO. 3 MOTOR CURRENT
323	50mA	I4.3 PUMP NO. 3 MOTOR OVERLOAD ALARM
316	50mA	I4.1 PUMP NO.3 IN HAND
317	50mA	I4.0 PUMP NO.3 IN AUTO
318	1A	Q1.1 PUMP NO.3 PLC START/STOP
320	50mA	I1.4 PUMP NO. 3 RUN
310	50mA	I4.2 PUMP NO. 3 SEAL FAILURE

LEGEND

- △ DEVICE OR FIELD TERMINAL LOCATED AT MOTOR
- ✳ DEVICE OR FIELD TERMINAL LOCATED REMOTE
- □ DEVICE OR FIELD TERMINAL LOCATED AT MCC/POWER PANEL
- ■ FIELD TERMINAL LOCATED AT CONTROL PANEL
- ▲ REMOTE TERMINAL
- ● DEVICE TERMINAL NO.
- ◆ PLC INTERFACE TERMINAL

NO.	DATE	REVISION	APP.

NOTES:

1. MOTOR OVERLOAD RELAY OUTPUT CONTACT SHOWN NORMALLY CLOSED WHEN RELAY IS DE-ENERGIZED, OPEN WHEN ENERGIZED, AND CLOSED WHEN IN ALARM. VERIFY OPERATION OF RELAY PROVIDED AND ADJUST CONNECTION OF RMOR AUXILIARY RELAYS.
2. FUSED TERMINAL ON TERMINAL BLOCK TB4 SEE CONTROL POWER AND COMMUNICATION WIRING DIAGRAM. DRAWING NO. BB-I-03.
3. ALL FLOAT CONTROL CIRCUIT WIRES COLOR SHALL BE YELLOW.

NOTICE:
FOR YOUR SAFETY, YOU ARE REQUIRED BY TEXAS LAW TO CALL 811 AT LEAST 48 HOURS BEFORE YOU DIG SO THAT UNDERGROUND LINES CAN BE MARKED. THIS SIGNATURE DOES NOT FULFILL YOUR OBLIGATION TO CALL 811

VERIFICATION OF PRIVATE UTILITY LINES

Date

CenterPoint Energy natural gas utilities shown. (Gas service lines are not shown). This signature not be used for conflict verification.

Signature valid for six months.

Date

CenterPoint Energy/UNDERGROUND Electrical Facilities Verification ONLY. (This signature verifies existing underground facilities – not to be used for conflict verification)

Signature valid for six months.

Date

Approved for AT&T underground conduit facilities only.
Signature valid for one year.

PAPE–DAWSON
2107 CITYWEST BLVD, 3RD FLR I HOUSTON, TX 77042 I 713.428.2400
TEXAS ENGINEERING FIRM #470 I TEXAS SURVEYING FIRM #10028800

GAI
Gupta & Associates, Inc.
CONSULTING ENGINEERING
Registration No. F-2593
302 Dennis St.
Houston, Texas 77006
Tel: 713-636-2936
Fax: 713-636-2987
email: hforouzan@gaiconsulting.com

THIS DOCUMENT IS RELEASED FOR INTERIM REVIEW UNDER THE AUTHORIZATION OF HOSS FOROUZAN, P.E. (#77748) AND IS **NOT TO BE USED FOR CONSTRUCTION.**

SURVEYED BY:
PAPE–DAWSON ENGINEERS
FB NO. 24–018

CITY OF HOUSTON
HOUSTON PUBLIC WORKS

LIFT STATION REHABILITATION AND RECONSTRUCTION
BEN'S BRANCH, WOODLAND RIDGE, ELMWOOD HILLS, FOREST SHORES, TRAIL RIVER, RIVERLAWN

INSTRUMENTATION

BEN'S BRANCH LIFT STATION PUMP NO.3 CONTROL WIRING DIAGRAM

WBS NUMBER	FOR CITY OF HOUSTON USE ONLY
R–000267–0180–3	
DRAWING SCALE	
AS NOTED	
CITY OF HOUSTON PM	
BRENDA JOHNSON P.E.	
SHEET NO. XX OF XX	

BB–I–14

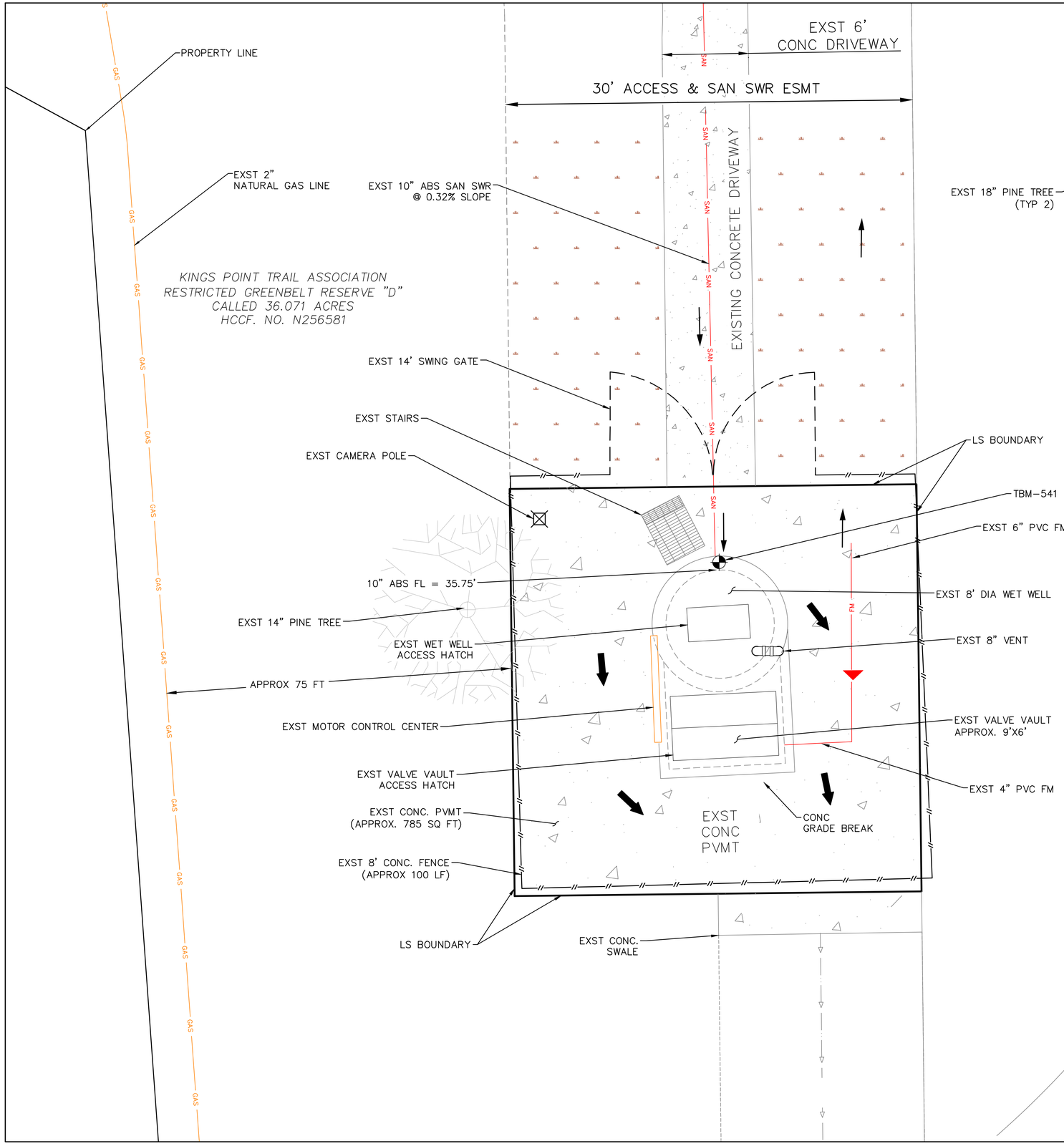

NOTE:

1. THIS SITE PLAN WAS DEVELOPED FROM ORIGINAL CONSTRUCTION DRAWINGS, RECENT TOPOGRAPHICAL SURVEY, AND FIELD OBSERVATIONS. SOME BURIED ITTEMS MAY EXIST ELSEWHERE, THEREFORE THE CONTRACTOR MUST FIELD VERIFY ALL UTLITIES AND STRUCTURE PRIOR TO CONSTRUCTION. SUBSURFACE ELECTRICAL ITEMS ARE SHOWN ON THE ELECTRICAL SITE PLAN
2. SEE PROPERTY BOUNDARY COORDINATES SHEET EH-C-03
3. CONTRACTOR TO REESTABLISH TBMS PRIOR TO DEMOLITION FOR ELEVATION CONTROL
4. SEE SHEET __ FOR EXST ELECTRICAL.

SUMMARY TABLE	
LIFT STATION NAME	ELMWOOD HILL
LIFT STATION NUMBER	519
ADDRESS	5938 ELMWOOD HILL LANE
KEY MAP	338E

FLOODPLAIN TABLE	
FREQUENCY	WATER SURFACE ELEVATION, FT
500-YR	54.0'
100-YR	50.0'
HARVEY	60.3'

TEMPORARY BENCHMARK DESCRIPTION
TBM-540 CUT "X" IN CONCRETE SIDEWALK - ELEVATION 54.89'
TBM-541 CUT "X" IN LS TOP SLAB - ELEVATION 53.24'

LEGEND

- DRAINAGE DIRECTION
- FLOW DIRECTION
- EXISTING PAVEMENT
- EXISTING GRASS AREA

SCALE: 1"= 4'
0' 4' 8' 12'

NO.	DATE	REVISION	APP.

NOTICE:
FOR YOUR SAFETY, YOU ARE REQUIRED BY TEXAS LAW TO CALL 811 AT LEAST 48 HOURS BEFORE YOU DIG SO THAT UNDERGROUND LINES CAN BE MARKED. THIS SIGNATURE DOES NOT FULFILL YOUR OBLIGATION TO CALL 811

VERIFICATION OF PRIVATE UTILITY LINES

Date

CenterPoint Energy natural gas utilities shown. (Gas service lines are not shown). This signature not be used for conflict verification.

Signature valid for six months.

Date

CenterPoint Energy/UNDERGROUND Electrical Facilities Verification ONLY. (This signature verifies existing underground facilities - not to be used for conflict verification)

Signature valid for six months.

Date

Approved for AT&T underground conduit facilities only. Signature valid for one year.

PAPE-DAWSON
2107 CITYWEST BLVD, 3RD FLR I HOUSTON, TX 77042 I 713.428.2400
TEXAS ENGINEERING FIRM #470 I TEXAS SURVEYING FIRM #10028800

PAPE-DAWSON
2107 CITYWEST BOULEVARD
3RD FLR
HOUSTON, TEXAS 77402
713-428-2400
TX FIRM #470

SURVEYED BY:
PAPE-DAWSON
FB NO. 24-018

THIS DOCUMENT IS RELEASED FOR INTERIM REVIEW UNDER THE AUTHORIZATION OF AMIRHOSSEIN SHOKOUHI, P.E. (#139835) AND IS **NOT TO BE USED FOR CONSTRUCTION.**

CITY OF HOUSTON
HOUSTON PUBLIC WORKS

LIFT STATION REHABILITATION AND RECONSTRUCTION
BEN'S BRANCH, WOODLAND RIDGE, ELMWOOD HILLS, FOREST SHORES, TRAIL RIVER, RIVERLAWN

CIVIL

ELMWOOD HILLS LIFT STATION EXISTING SITE PLAN & YARD PIPING

WBS NUMBER	FOR CITY OF HOUSTON USE ONLY
R-000267-0180-3	
DRAWING SCALE	
AS NOTED	
CITY OF HOUSTON PM	
BRENDA JOHNSON P.E.	
SHEET NO. 150 OF 338	

EH-C-01

FILE PATH: K:\Projects\423\77 COH LS Package\00\03 CADD\Plans\Sheets\05 Elmwood Hills\ELM Existing Yard Piping.dwg

REMOVE EXST 10" ABS SAN SWR

REMOVE EXST 14' SWING GATE

30' ACCESS & SAN SWR ESMT

EXST 6" PVC FM TO REMAIN

LS BOUNDARY

REMOVE EXST CAMERA POLE

REMOVE EXST ACCESS PLATFORM

EXST 14" PINE TREE

TBM-541

REMOVE EXST WET WELL CONC TOP SLAB

REMOVE EXST 6" PVC FM

REMOVE EXST WET WELL ACCESS HATCH

EXST 8' DIA WET WELL

REMOVE EXST 8" VENT

REMOVE EXST MOTOR CONTROL CENTER

EXST 4" PVC FM

REMOVE EXST VALVE VAULT ACCESS HATCH

REMOVE EXST VALVE VAULT CONC TOP SLAB

ABANDON EXST VALVE VAULT AND FILL WITH GROUT

REPAIR EXST CONC PVMT

REMOVE EXST 8' CONC FENCE

TEMPORARY BENCHMARK DESCRIPTION

TBM-540 CUT "X" IN CONCRETE SIDEWALK - ELEVATION 54.89'
TBM-541 CUT "X" IN LS TOP SLAB - ELEVATION 53.24'

LEGEND

TO BE REMOVED

NOTE:

1. CONTRACTOR TO REESTABLISH TBM PRIOR TO DEMOLITION FOR ELEVATION CONTROL.
2. SEE ELECTRICAL SHEETS FOR ELECTRICAL DEMOLITION.
3. THE SOUND PRODUCED BY THE ERECTION, EXCAVATION, CONSTRUCTION, OR DEMOLITION OF ANY BUILDING OR STRUCTURE, INCLUDING THE USE OF ANY NECESSARY TOOLS OR EQUIPMENT, CONDUCTED BETWEEN THE HOURS OF 7 A.M. AND 8 P.M., SHALL NOT PRODUCE A SOUND EXCEEDING 85 DB(A) WHEN MEASURED FROM THE PROPERTY LINE OF THE RESIDENTIAL PROPERTY WHERE THE SOUND IS BEING RECEIVED
4. PER SECTION 01145S, THE CITY OF HOUSTON TO HAVE FIRST REFUSAL RIGHTS TO RETAIN ALL ITEMS SHOWN TO BE DEMOLISHED AND/OR REMOVED.

SCALE: 1"= 2'

0' 2' 4' 6'

NO.	DATE	REVISION	APP.

NOTICE:
FOR YOUR SAFETY, YOU ARE REQUIRED BY TEXAS LAW TO CALL 811 AT LEAST 48 HOURS BEFORE YOU DIG SO THAT UNDERGROUND LINES CAN BE MARKED. THIS SIGNATURE DOES NOT FULFILL YOUR OBLIGATION TO CALL 811

VERIFICATION OF PRIVATE UTILITY LINES

Date

CenterPoint Energy natural gas utilities shown. (Gas service lines are not shown). This signature not be used for conflict verification.

Signature valid for six months.

Date

CenterPoint Energy/UNDERGROUND Electrical Facilities Verification ONLY. (This signature verifies existing underground facilities – not to be used for conflict verification)

Signature valid for six months.

Date

Approved for AT&T underground conduit facilities only.
Signature valid for one year.

PAPE-DAWSON
2107 CITYWEST BLVD, 3RD FLR I HOUSTON, TX 77042 I 713.428.2400
TEXAS ENGINEERING FIRM #470 I TEXAS SURVEYING FIRM #10028800

PAPE-DAWSON
2107 CITYWEST BOULEVARD
3RD FLR
HOUSTON, TEXAS 77402
713-428-2400
TX FIRM #470

SURVEYED BY:
PAPE-DAWSON
FB NO. 24-018

THIS DOCUMENT IS RELEASED FOR INTERIM REVIEW UNDER THE AUTHORIZATION OF AMIRHOSSEIN SHOKOUHI, P.E. (#139835) AND IS **NOT TO BE USED FOR CONSTRUCTION.**

CITY OF HOUSTON
HOUSTON PUBLIC WORKS

LIFT STATION REHABILITATION AND RECONSTRUCTION
BEN'S BRANCH, WOODLAND RIDGE, ELMWOOD HILLS, FOREST SHORES, TRAIL RIVER, RIVERLAWN

CIVIL

ELMWOOD HILLS LIFT STATION DEMOLITION PLAN

WBS NUMBER	FOR CITY OF HOUSTON USE ONLY
R-000267-0180-3	
DRAWING SCALE	
AS NOTED	
CITY OF HOUSTON PM	
BRENDA JOHNSON P.E.	
SHEET NO. 151 OF 338	

EH-C-02

FILE PATH: K:\Projects\423\77 COH LS Package\00\03 CADD\Plans\Sheets\05 Elmwood Hills\ELM DEMO - C - 4237700.dwg

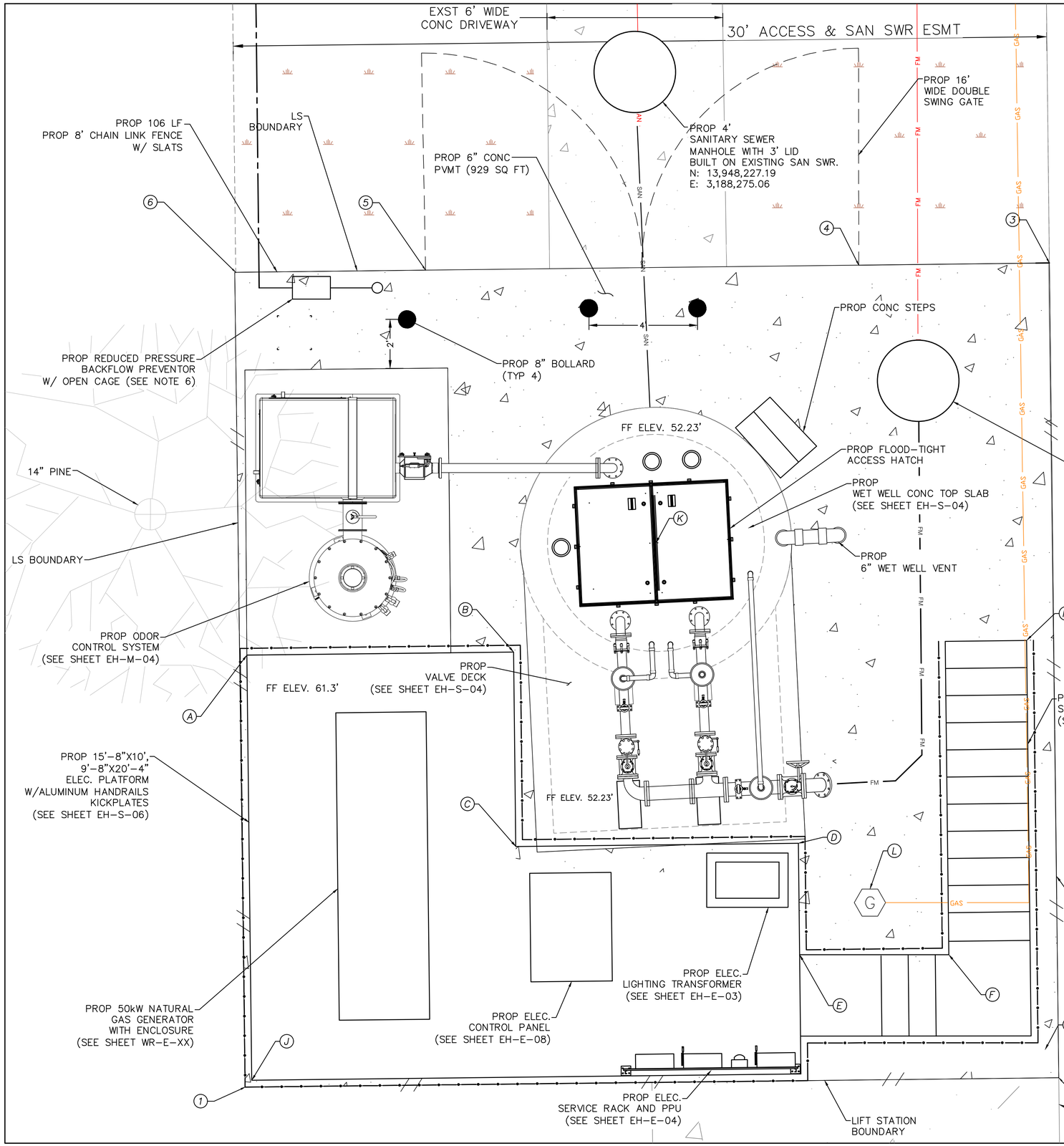

PROPERTY COORDINATION				
POINT #	PROPOSED ELEVATIONS	EXIST ELEVATION	NORTHING	EASTING
1	51.81	51.81	13948189.79	3188260.69
2	51.64	51.64	13948190.13	3188290.69
3	52.10	52.10	13948220.16	3188290.34
4	52.09	52.09	13948220.08	3188283.31
5	51.91	51.91	13948219.89	3188267.34
6	52.37	52.37	13948219.81	3188260.35

STRUCTURE COORDINATION				
POINT #	PROPOSED ELEVATIONS	EXIST ELEVATION	NORTHING	EASTING
A	52.00	52.00	13948205.71	3188260.76
B	52.05	52.05	13948205.82	3188270.59
C	51.84	51.84	13948198.65	3188270.67
D	51.80	51.80	13948198.77	3188281.09
E	51.05	51.05	13948194.67	3188281.13
F	51.15	51.15	13948194.67	3188286.64
G	51.12	51.12	13948206.22	3188286.50
H	51.28	51.28	13948206.25	3188289.50
I	51.61	51.61	13948191.17	3188290.19
J	51.81	51.81	13948190.04	3188260.94
K	52.23	52.23	13948209.84	3188275.84
L	51.02	51.02	13948196.59	3188283.75

NOTE:
1. THE ELEVATED ELECTRICAL/GENERATOR PLATFORM TO BE INSTALLED AT ELEVATION OF 61.3' (9.3 FT HIGHER THAN GROUND ELEVATION OF 52.0').
2. CONTRACTOR SHALL BE RESPONSIBLE FOR REPAIRING AND REPAVING ANY PORTION OF CONC ACCESS ROAD AND PAVING.
3. WET WELL TOP SLAB TO BE REPLACED TO ACCOMMODATE NEW OPENING AND FLOOD TIGHT ACCESS HATCHES (SEE SHEET __)
4. THE EXST VALVE VAULT TO BE FILLED WITH GROUT AND ABANDONED. NEW VALVE PAD TO BE INSTALLED.
5. ACCORDING TO SURVEY, THE EXST FENCE IS CONSTRUCTED SLIGHTLY OUTSIDE THE LIFT STATION BOUNDARY. THE NEW FENCE LOCATION TO BE ADJUSTED ACCORDINGLY AND INSTALLED AT THE LIFT STATION BOUNDARY.
6. CONTRACTOR TO TAP A 3/4" WATER LINE TO THE EXST 4" PVC WATER LINE LOCATED AT THE ROW. THE 3/4" LINE TO BE EXTENDED WITHIN SANITARY SEWER AND ACCESS EASEMENT AND CONNECTED TO THE PROP BACKFLOW PREVENTER (SEE SHEET GC-04 FOR DETAIL)
7. THE EXST WET WELL INTERIOR WALLS AND CEILING TO BE RE-COATED WITH COH WWO APPROVED MATERIAL
8. THE EXST PAVEMENT TO BE REPAIRED AT THE SAME ELEVATION AND GRADE. NO UNDERGROUND DETENTION IS REQUIRED.
9. PROP GENERATOR WILL BE USED FOR EMERGENCY AND TESTING ONLY. NOISE AND SOUND REGULATION IN CODE COMPLIANCE CHAPTER 30 NOT APPLICABLE.

TEMPORARY BENCHMARK DESCRIPTION
TBM-540 CUT "X" IN CONCRETE SIDEWALK - ELEVATION 54.89'
TBM-541 CUT "X" IN LS TOP SLAB - ELEVATION 53.24'

LEGEND

EXISTING PAVEMENT

EXISTING GRASS AREA

PROPOSED PAVEMENT

SCALE: 1"= 2'
0' 2' 4' 6'

NO.	DATE	REVISION	APP.

NOTICE:
FOR YOUR SAFETY, YOU ARE REQUIRED BY TEXAS LAW TO CALL 811 AT LEAST 48 HOURS BEFORE YOU DIG SO THAT UNDERGROUND LINES CAN BE MARKED. THIS SIGNATURE DOES NOT FULFILL YOUR OBLIGATION TO CALL 811

VERIFICATION OF PRIVATE UTILITY LINES

Date

CenterPoint Energy natural gas utilities shown. (Gas service lines are not shown). This signature not be used for conflict verification.

Signature valid for six months.

Date

CenterPoint Energy/UNDERGROUND Electrical Facilities Verification ONLY. (This signature verifies existing underground facilities - not to be used for conflict verification)

Signature valid for six months.

Date

Approved for AT&T underground conduit facilities only. Signature valid for one year.

PAPE-DAWSON
2107 CITYWEST BLVD, 3RD FLR I HOUSTON, TX 77042 I 713.428.2400
TEXAS ENGINEERING FIRM #470 I TEXAS SURVEYING FIRM #10028800

PAPE-DAWSON
2107 CITYWEST BOULEVARD
3RD FLR
HOUSTON, TEXAS 77402
713-428-2400
TX FIRM #470

SURVEYED BY:
PAPE-DAWSON
FB NO. 24-018

THIS DOCUMENT IS RELEASED FOR INTERIM REVIEW UNDER THE AUTHORIZATION OF AMIRHOSSEIN SHOKOUHI, P.E. (#139835) AND IS **NOT TO BE USED FOR CONSTRUCTION.**

CITY OF HOUSTON
HOUSTON PUBLIC WORKS

LIFT STATION REHABILITATION AND RECONSTRUCTION
BEN'S BRANCH, WOODLAND RIDGE, ELMWOOD HILLS, FOREST SHORES, TRAIL RIVER, RIVERLAWN

CIVIL

ELMWOOD HILLS LIFT STATION PROPOSED SITE PLAN

WBS NUMBER	FOR CITY OF HOUSTON USE ONLY
R-000267-0180-3	
DRAWING SCALE	
AS NOTED	
CITY OF HOUSTON PM	
BRENDA JOHNSON P.E.	
SHEET NO. 152 OF 338	

EH-C-03

FILE PATH: K:\Projects\423\77 COH LS Package\00\03 CADD\Plans\Sheets\05 Elmwood Hills\LAYOUT-C-4237700.dwg

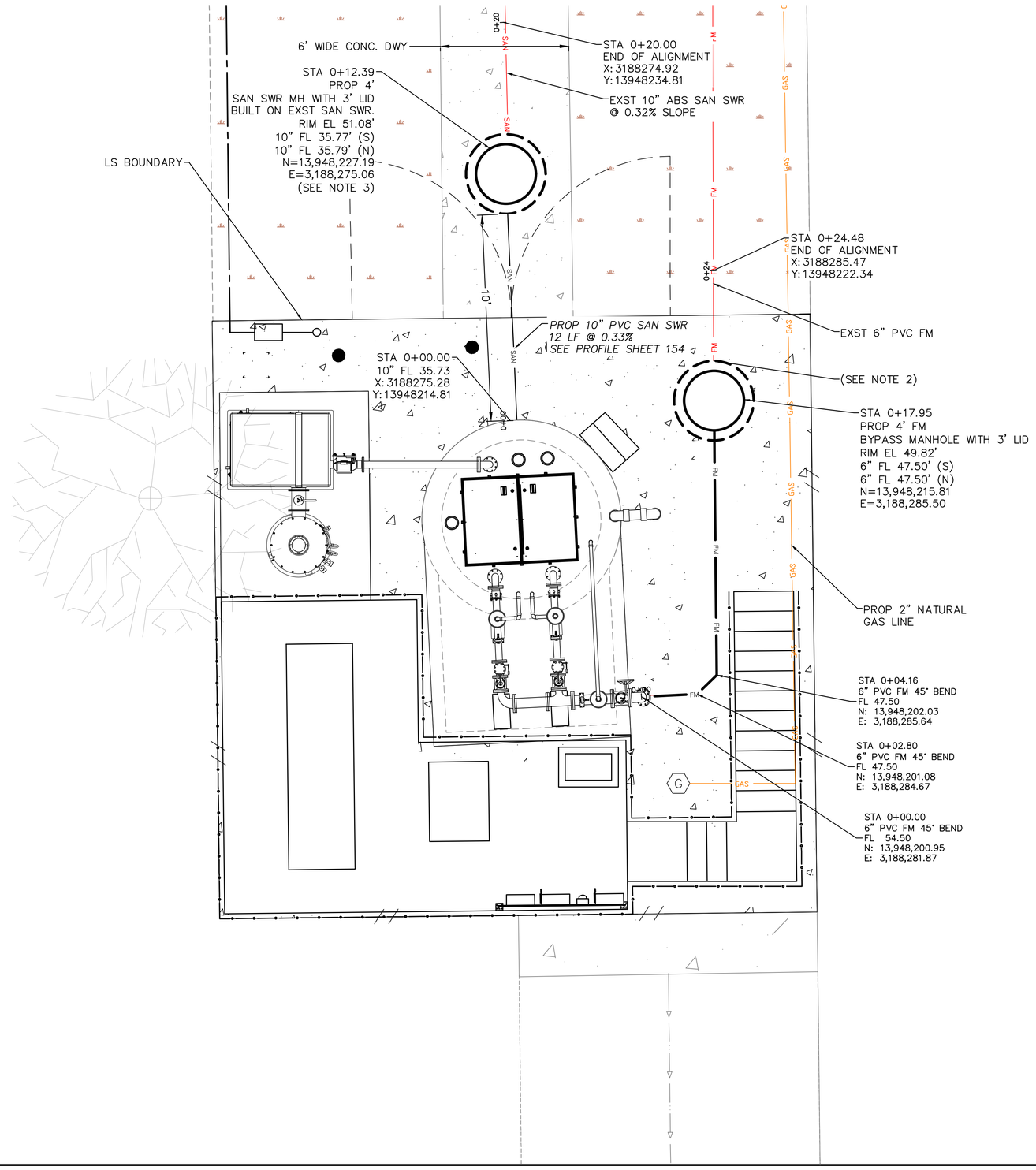

PROPOSED WATER LINE PIPE SCHEDULE		
SIZE	MATERIAL	FITTING
3/4 INCH	SCH 40 G.S.	STRAIGHT PIPE
3/4 INCH	SCH 40 G.S.	BACKFLOW PREVENTER
3/4 INCH	SCH 40 G.S.	STRAIGHT PIPE
3/4 INCH	SCH 40 G.S.	HOSE BIBB

TEMPORARY BENCHMARK DESCRIPTION

TBM-540 CUT "X" IN CONCRETE SIDEWALK – ELEVATION 54.89'
TBM-541 CUT "X" IN LS TOP SLAB – ELEVATION 53.24'

LEGEND

EXISTING PAVEMENT

EXISTING GRASS AREA

PROPOSED PAVEMENT

SCALE: 1"= 4'

0' 4' 8' 12'

NOTE:

1. CONTRACTOR TO TAP A ¾" WATER LINE TO THE EXISTING 4" PVC WATER LINE LOCATED AT THE ROW. THE ¾" LINE TO BE EXTENDED WITHIN SANITARY SEWER AND ACCESS EASEMENT AND CONNECTED TO THE PROPOSED BACKFLOW PREVENTOR.
2. CONTRACTOR TO LOCATE EXISTING 6" PVC FM EXISTING THE FACILITY AT STA 0+17.95 AND CONNECT TO THE PROPOSED 4' FM BYPASS MANHOLE.
3. CONTRACTOR TO LOCATE THE EXISTING 10" SAN SWR FL AT STA 0+12.39 AND CONNECT TO THE PROPOSED 4' SANITARY SEWER MANHOLE.
4. CONTRACTOR TO FIELD VERIFY THE EXISTING NATURAL GAS LINE AND TAP THE PROPOSED NATURAL GAS LINE TO THE EXISTING LINE, EXTEND TO THE FACILITY AND CONNECT TO THE GAS METER.

NO.	DATE	REVISION	APP.

NOTICE:
FOR YOUR SAFETY, YOU ARE REQUIRED BY TEXAS LAW TO CALL 811 AT LEAST 48 HOURS BEFORE YOU DIG SO THAT UNDERGROUND LINES CAN BE MARKED. THIS SIGNATURE DOES NOT FULFILL YOUR OBLIGATION TO CALL 811

VERIFICATION OF PRIVATE UTILITY LINES

Date

CenterPoint Energy natural gas utilities shown. (Gas service lines are not shown). This signature not be used for conflict verification.

Signature valid for six months.

Date

CenterPoint Energy/UNDERGROUND Electrical Facilities Verification ONLY. (This signature verifies existing underground facilities – not to be used for conflict verification)

Signature valid for six months.

Date

Approved for AT&T underground conduit facilities only.
Signature valid for one year.

PAPE-DAWSON
2107 CITYWEST BLVD, 3RD FLR I HOUSTON, TX 77042 I 713.428.2400
TEXAS ENGINEERING FIRM #470 I TEXAS SURVEYING FIRM #10028800

PAPE-DAWSON
2107 CITYWEST BOULEVARD
3RD FLR
HOUSTON, TEXAS 77402
713-428-2400
TX FIRM #470

SURVEYED BY:
PAPE-DAWSON
FB NO. 24-018

THIS DOCUMENT IS RELEASED FOR INTERIM REVIEW UNDER THE AUTHORIZATION OF AMIRHOSSEIN SHOKOUHI, P.E. (#139835) AND IS **NOT TO BE USED FOR CONSTRUCTION.**

CITY OF HOUSTON
HOUSTON PUBLIC WORKS

LIFT STATION REHABILITATION AND RECONSTRUCTION
BEN'S BRANCH, WOODLAND RIDGE, ELMWOOD HILLS, FOREST SHORES, TRAIL RIVER, RIVERLAWN

CIVIL

ELMWOOD HILLS LIFT STATION PROPOSED YARD PIPING PLAN

WBS NUMBER	FOR CITY OF HOUSTON USE ONLY
R-000267-0180-3	
DRAWING SCALE	
AS NOTED	
CITY OF HOUSTON PM	
BRENDA JOHNSON P.E.	
SHEET NO. 153 OF 338	

EH-C-04

FILE PATH: K:\Projects\423\77 COH LS Package\00\03 CADD\Plans\Sheets\05 Elmwood Hills\ELM PYPP-C-4237700.dwg

NOTE 1:
THE EXSTING PAVEMENT TO BE REPAIRED AT THE SAME GRADE AND ELEVATION. NO UNDERGROUND DETENTION IS REQUIRED.

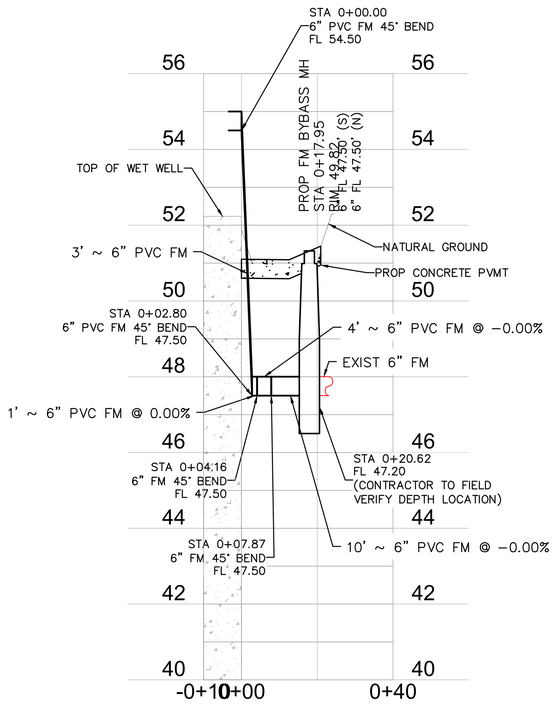

ELMWOOD PROPOSED 6 INCH FM

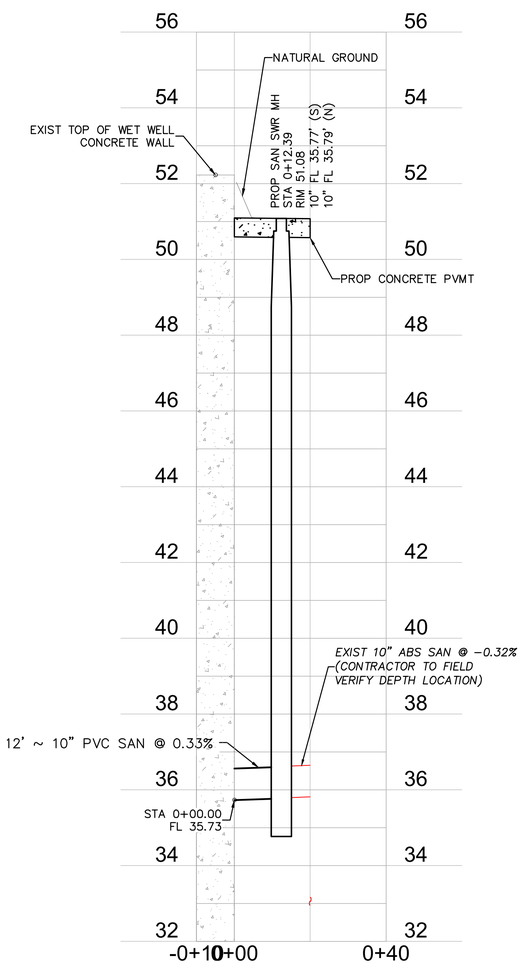

ELMWOOD PROPOSED 10 INCH SANITARY

SCALE: 1"= 2'
0' 2' 4' 6'

NOTICE:
FOR YOUR SAFETY, YOU ARE REQUIRED BY TEXAS LAW TO CALL 811 AT LEAST 48 HOURS BEFORE YOU DIG SO THAT UNDERGROUND LINES CAN BE MARKED. THIS SIGNATURE DOES NOT FULFILL YOUR OBLIGATION TO CALL 811

VERIFICATION OF PRIVATE UTILITY LINES

Date

CenterPoint Energy natural gas utilities shown. (Gas service lines are not shown). This signature not be used for conflict verification.

Signature valid for six months.

Date

CenterPoint Energy/UNDERGROUND Electrical Facilities Verification ONLY. (This signature verifies existing underground facilities – not to be used for conflict verification)

Signature valid for six months.

Date

Approved for AT&T underground conduit facilities only.
Signature valid for one year.

PAPE–DAWSON
2107 CITYWEST BLVD, 3RD FLR I HOUSTON, TX 77042 I 713.428.2400
TEXAS ENGINEERING FIRM #470 I TEXAS SURVEYING FIRM #10028800

PAPE–DAWSON
2107 CITYWEST BOULEVARD
3RD FLR
HOUSTON, TEXAS 77402
713–428–2400
TX FIRM #470

SURVEYED BY:
PAPE–DAWSON
FB NO. 24–018

THIS DOCUMENT IS RELEASED FOR INTERIM REVIEW UNDER THE AUTHORIZATION OF AMIRHOSSEIN SHOKOUHI, P.E. (#139835) AND IS **NOT TO BE USED FOR CONSTRUCTION.**

CITY OF HOUSTON
HOUSTON PUBLIC WORKS

LIFT STATION REHABILITATION AND RECONSTRUCTION
BEN'S BRANCH, WOODLAND RIDGE, ELMWOOD HILLS, FOREST SHORES, TRAIL RIVER, RIVERLAWN

CIVIL

ELMWOOD HILLS LIFT STATION SANITARY AND FM PLAN & PROFILE

WBS NUMBER	FOR CITY OF HOUSTON USE ONLY
R–000267–0180–3	
DRAWING SCALE	
AS NOTED	
CITY OF HOUSTON PM	
BRENDA JOHNSON P.E.	
SHEET NO. 154 OF 338	

EH–C–05

NO.	DATE	REVISION	APP.

FILE PATH: K:\Projects\423\77 COH LS Package\00\03 CADD\Plans\Sheets\05 Elmwood Hills\ELM PYP P&P–C–4237700.dwg

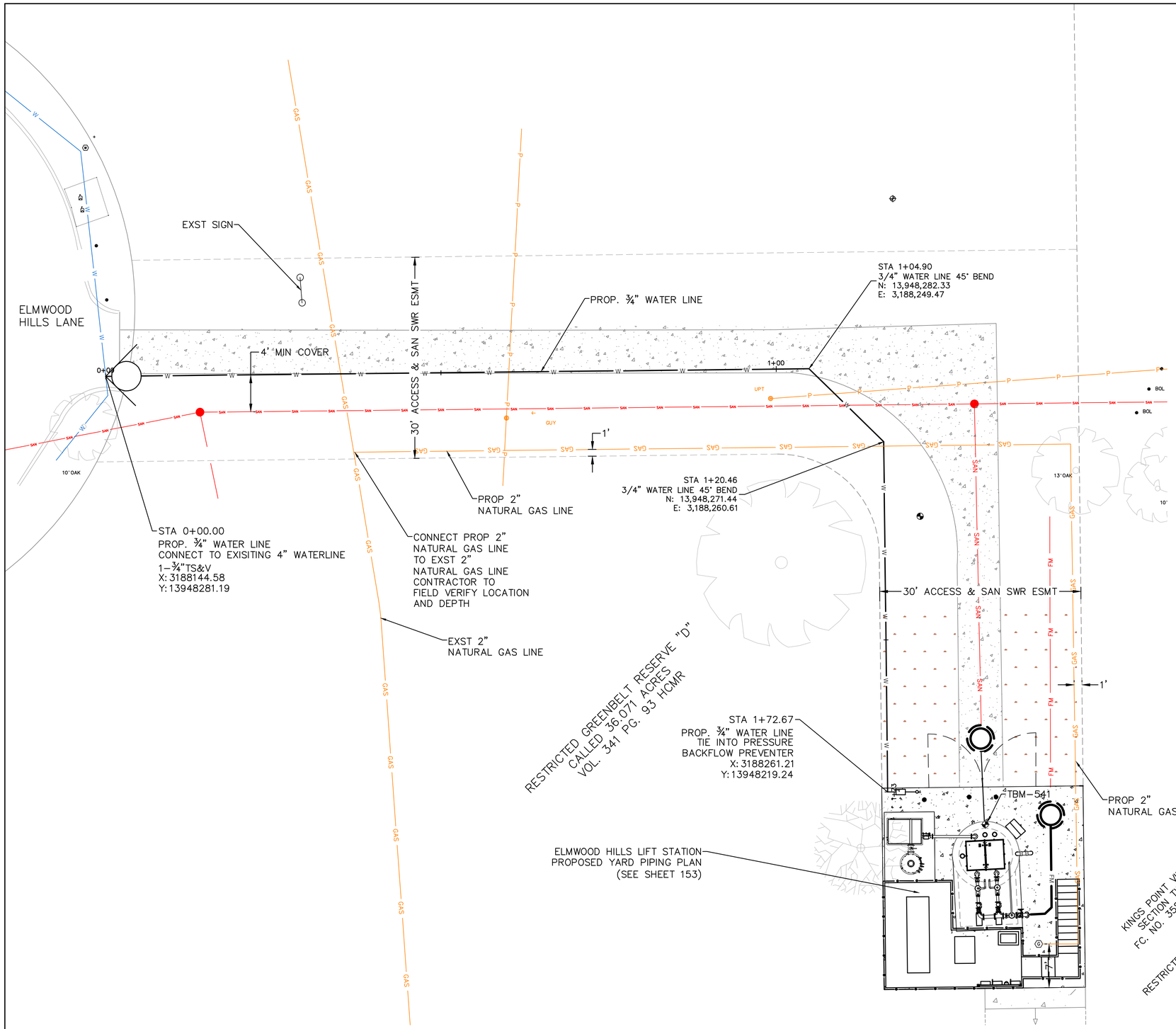

NOTE:

1. THE PROPOSED WATER LINE TO BE INSTALLED 3 FT BELOW NATURAL GROUND ELEVATION.
2. CONTRACTOR TO PROVIDE MIN. 4 FT HORIZONTAL DISTANCE AND 2 FT VERTICAL DISTANCE FROM THE EXST SANITARY SEWER AT ALL LOCATIONS.
3. CONTRACTOR TO FIELD VERIFY THE EXST GAS LINE LOCATION AND TAP THE PROPOSED NATURAL GAS LINE TO THE EXST GAS LINE AS SHOWN HERE AND EXTENDED TO THE GAS METER.
4. PROPOSED NATURAL GAS LINE TO BE INSTALLED 3 FT BELOW NATURAL GROUND ELEVATION.

TEMPORARY BENCHMARK DESCRIPTION

TBM-540 CUT "X" IN CONCRETE SIDEWALK - ELEVATION 54.89'
TBM-541 CUT "X" IN LS TOP SLAB - ELEVATION 53.24'

LEGEND

- EXISTING PAVEMENT
- EXISTING GRASS AREA
- PROPOSED PAVEMENT

NO.	DATE	REVISION	APP.

SCALE: 1"= 4'

0' 4' 8' 12'

NOTICE:
FOR YOUR SAFETY, YOU ARE REQUIRED BY TEXAS LAW TO CALL 811 AT LEAST 48 HOURS BEFORE YOU DIG SO THAT UNDERGROUND LINES CAN BE MARKED. THIS SIGNATURE DOES NOT FULFILL YOUR OBLIGATION TO CALL 811

VERIFICATION OF PRIVATE UTILITY LINES

Date

CenterPoint Energy natural gas utilities shown. (Gas service lines are not shown). This signature not be used for conflict verification.

Signature valid for six months.

Date

CenterPoint Energy/UNDERGROUND Electrical Facilities Verification ONLY. (This signature verifies existing underground facilities - not to be used for conflict verification)

Signature valid for six months.

Date

Approved for AT&T underground conduit facilities only.
Signature valid for one year.

PAPE-DAWSON
2107 CITYWEST BLVD, 3RD FLR I HOUSTON, TX 77042 I 713.428.2400
TEXAS ENGINEERING FIRM #470 I TEXAS SURVEYING FIRM #10028800

PAPE-DAWSON
2107 CITYWEST BOULEVARD
3RD FLR
HOUSTON, TEXAS 77402
713-428-2400
TX FIRM #470

SURVEYED BY:
PAPE-DAWSON
FB NO. 24-018

THIS DOCUMENT IS RELEASED FOR INTERIM REVIEW UNDER THE AUTHORIZATION OF AMIRHOSSEIN SHOKOUHI, P.E. (#139835) AND IS **NOT TO BE USED FOR CONSTRUCTION.**

CITY OF HOUSTON
HOUSTON PUBLIC WORKS

LIFT STATION REHABILITATION AND RECONSTRUCTION
BEN'S BRANCH, WOODLAND RIDGE, ELMWOOD HILLS, FOREST SHORES, TRAIL RIVER, RIVERLAWN

CIVIL

ELMWOOD HILLS LIFT STATION PROPOSED UTILITY LINE PLAN

WBS NUMBER	FOR CITY OF HOUSTON USE ONLY
R-000267-0180-3	
DRAWING SCALE	
AS NOTED	
CITY OF HOUSTON PM	
BRENDA JOHNSON P.E.	
SHEET NO. 155 OF 338	

EH-C-06

FILE PATH: K:\Projects\423\77 COH LS Package\00\03 CADD\Plans\Sheets\05 Elmwood Hills\ELM PYPP WTR-C-4237700.dwg

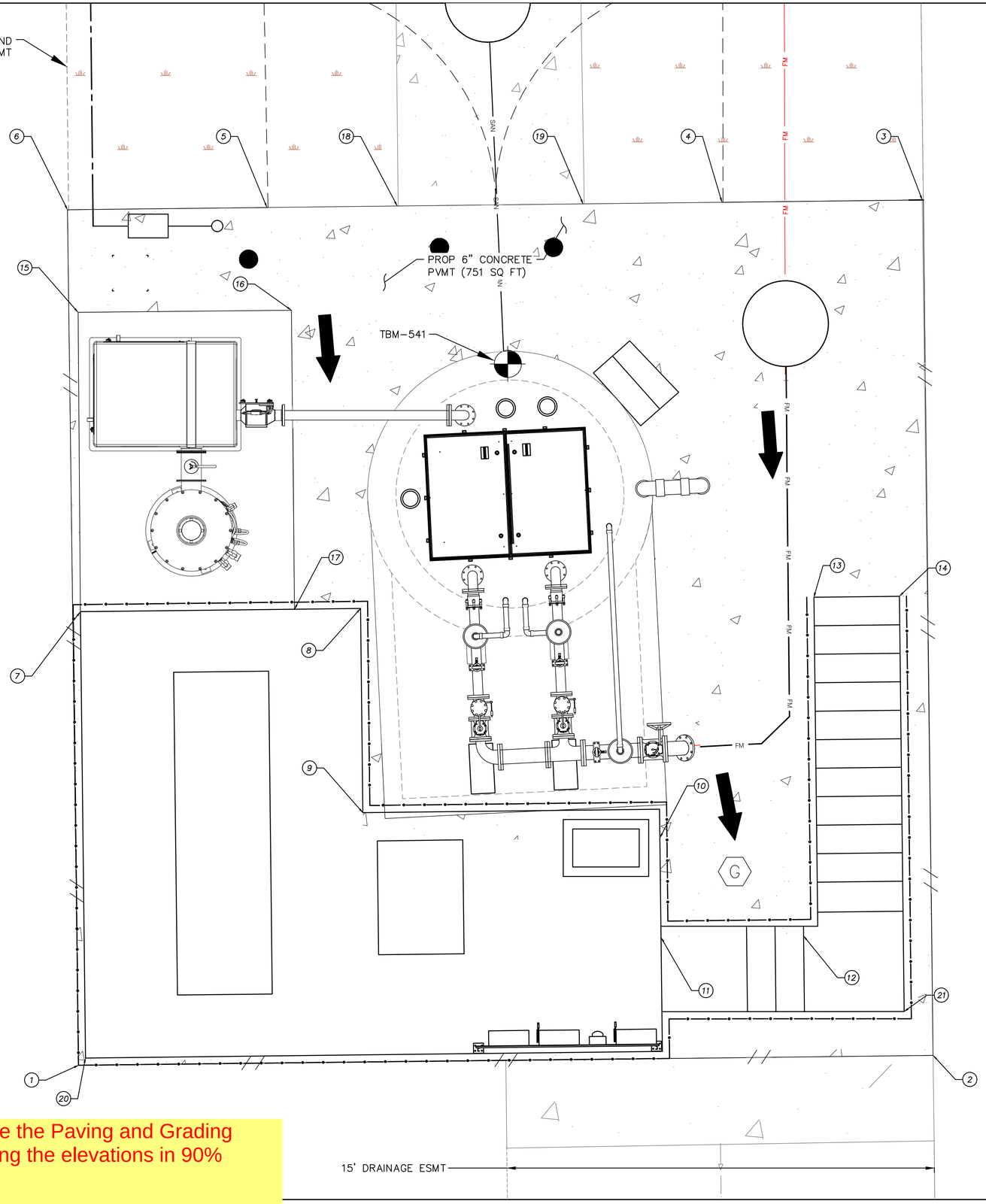

PAVEMENT COORDINATION			
Point #	Elevation	Northing	Easting
1	51.81	13948189.79	3188260.69
2	51.64	13948190.13	3188290.69
3	51.83	13948220.16	3188290.31
4	51.86	13948220.08	3188283.28
5	51.81	13948219.89	3188267.31
6	52.34	13948219.81	3188260.31
7	52.16	13948205.71	3188260.76
8	52.05	13948205.82	3188270.59
9	51.84	13948198.65	3188270.67
10	51.80	13948197.77	3188281.10
11	51.05	13948194.27	3188281.14
12	51.15	13948194.33	3188286.14
13	51.12	13948206.22	3188286.50
14	51.28	13948206.25	3188289.50
15	52.20	13948216.21	3188260.68
16	51.41	13948216.29	3188268.16
17	51.53	13948205.79	3188268.27
18	51.21	13948219.95	3188271.88
19	51.29	13948220.02	3188278.40
20	51.81	13948190.04	3188260.94
21	51.64	13948191.67	3188289.67

NOTES:

1. THE CONTRACTOR SHALL BE FULLY RESPONSIBLE FOR ANY DAMAGES TO EXISTING WATER, WASTEWATER, STORM WATER LINES AND TRAFFIC CONTROL DEVICES. ALL DAMAGES SHALL BE IN ACCORDANCE WITH THE "STANDARD CONSTRUCTION SPECIFICATIONS" REFERENCED ABOVE, AT NO COST TO THE CITY OF HOUSTON.
2. ADEQUATE DRAINAGE SHALL BE MAINTAINED AT ALL TIMES DURING CONSTRUCTION AND ANY DRAINAGE DITCH OR STRUCTURE DISTURBED DURING CONSTRUCTION SHALL BE RESTORED TO THE SATISFACTION OF THE OWNING AUTHORITY.
3. CONTRACTOR SHALL TAKE NECESSARY PRECAUTIONS TO PROTECT ROOT SYSTEMS OF SHRUBS, PLANTS, AND TREES ALONG THE AREA OF EXCAVATION.
4. THE CONTRACTOR SHALL COMPLY WITH THE LATEST EDITION OF OSHA REGULATIONS AND THE STATE OF TEXAS LAWS CONCERNING EXCAVATION.
5. REFER TO TOPOGRAPHIC SURVEY DRAWING FOR PROPERTY LINES BEARING AND DISTANCE.
6. CONTRACTOR TO COORDINATE OF LAYDOWN AREA WITH OWNER.
7. THE EXISTING PAVEMENT TO BE REPAIRED AT THE SAME ELEVATION AND GRADE. NO UNDERGROUND DETENTION IS REQUIRED.

PROPOSED PAVEMENT			
ITEM	LOCATION	ACTION	SQUARE FOOTAGE
SITE PAVEMENT	INSIDE PROPERTY BOUNDARY	ADDING CONCRETE UNDER/AROUND PLATFORM	±751.57
CONCRETE PAD	INSIDE PROPERTY BOUNDARY	ADDING CONCRETE PAD FOR ODOR CONTROL SYSTEM	±78.78

PD will finalize the Paving and Grading sheet, including the elevations in 90% deliverable.

TEMPORARY BENCHMARK DESCRIPTION
TBM-540 CUT "X" IN CONCRETE SIDEWALK - ELEVATION 54.89'
TBM-541 CUT "X" IN LS TOP SLAB - ELEVATION 53.24'

LEGEND

- DRAINAGE DIRECTION
- EXISTING PAVEMENT
- EXISTING GRASS AREA
- PROPOSED PAVEMENT

SCALE: 1"= 2'

0' 2' 4' 6'

NO.	DATE	REVISION	APP.

NOTICE:
FOR YOUR SAFETY, YOU ARE REQUIRED BY TEXAS LAW TO CALL 811 AT LEAST 48 HOURS BEFORE YOU DIG SO THAT UNDERGROUND LINES CAN BE MARKED. THIS SIGNATURE DOES NOT FULFILL YOUR OBLIGATION TO CALL 811

VERIFICATION OF PRIVATE UTILITY LINES

Date

CenterPoint Energy natural gas utilities shown. (Gas service lines are not shown). This signature not be used for conflict verification.
Signature valid for six months.

Date

CenterPoint Energy/UNDERGROUND Electrical Facilities Verification ONLY. (This signature verifies existing underground facilities – not to be used for conflict verification)
Signature valid for six months.

Date

Approved for AT&T underground conduit facilities only.
Signature valid for one year.

PAPE-DAWSON
2107 CITYWEST BLVD, 3RD FLR I HOUSTON, TX 77042 I 713.428.2400
TEXAS ENGINEERING FIRM #470 I TEXAS SURVEYING FIRM #10028800

PAPE-DAWSON
2107 CITYWEST BOULEVARD
3RD FLR
HOUSTON, TEXAS 77402
713-428-2400
TX FIRM #470

SURVEYED BY:
PAPE-DAWSON
FB NO. 24-018

THIS DOCUMENT IS RELEASED FOR INTERIM REVIEW UNDER THE AUTHORIZATION OF AMIRHOSSEIN SHOKOUHI, P.E. (#139835) AND IS **NOT TO BE USED FOR CONSTRUCTION.**

CITY OF HOUSTON
HOUSTON PUBLIC WORKS

LIFT STATION REHABILITATION AND RECONSTRUCTION
BEN'S BRANCH, WOODLAND RIDGE, ELMWOOD HILLS, FOREST SHORES, TRAIL RIVER, RIVERLAWN

CIVIL

ELMWOOD HILLS LIFT STATION PAVING AND GRADING PLAN

WBS NUMBER	FOR CITY OF HOUSTON USE ONLY
R-000267-0180-3	
DRAWING SCALE	
AS NOTED	
CITY OF HOUSTON PM	
BRENDA JOHNSON P.E.	
SHEET NO. 156 OF 338	

EH-C-07

FILE PATH: K:\Projects\423\77 COH LS Package\00\03 CADD\Plans\Sheets\05 Elmwood Hills\ELM PAVING & GRADING -C- 4237700.dwg

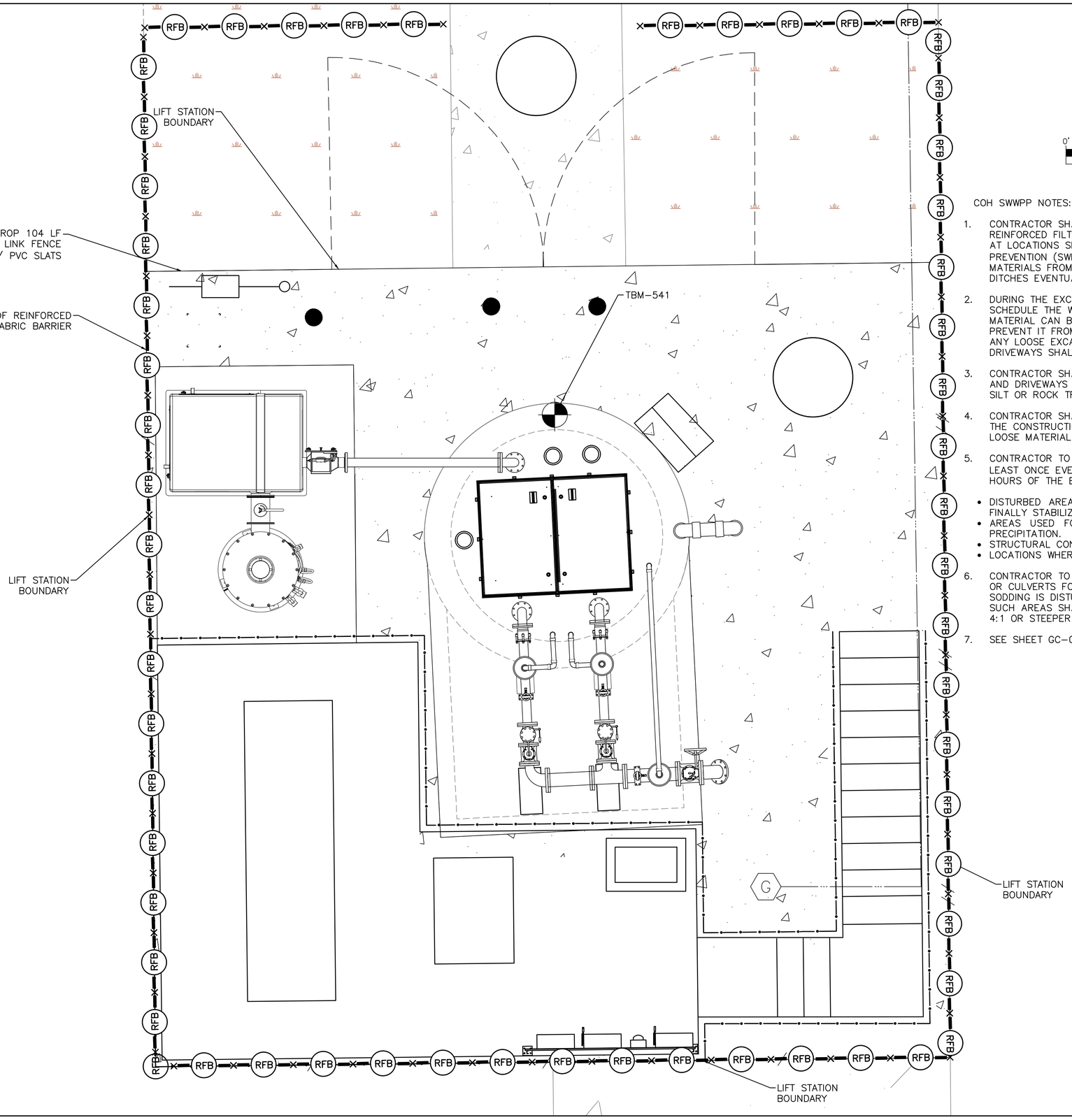

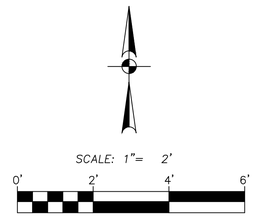

TEMPORARY BENCHMARK DESCRIPTION

TBM-540 CUT "X" IN CONCRETE SIDEWALK – ELEVATION 54.89'
TBM-541 CUT "X" IN LS TOP SLAB – ELEVATION 53.24'

LEGEND

- REINFORCED FILTER FABRIC BARRIER
- EXISTING PAVEMENT
- EXISTING GRASS AREA
- PROPOSED PAVEMENT
- IPB — INLET PROTECTION BARRIER

COH SWWPP NOTES:

1. CONTRACTOR SHALL IMPLEMENT INLET PROTECTION DEVICES AND REINFORCED FILTER FABRIC BARRIER ALONG ROAD AND SIDE DITCHES AT LOCATIONS SHOWN ON THE TYPICAL STORM WATER POLLUTION PREVENTION (SWPP) PLANS TO KEEP SILT AND OR EXCAVATED MATERIALS FROM ENTERING INTO THE STORM WATER INLETS AND DITCHES EVENTUALLY POLLUTING THE RECEIVING STORM.
2. DURING THE EXCAVATION PHASE OF THE PROJECT, CONTRACTOR SHALL SCHEDULE THE WORK IN SHORT SEGMENTS SO THAT EXCAVATION MATERIAL CAN BE QUICKLY HAULED AWAY FROM THE SITE AND TO PREVENT IT FROM STAYING UNCOLLECTED ON THE EXISTING PAVEMENT. ANY LOOSE EXCAVATED MATERIAL WHICH FALLS ON PAVEMENTS OR DRIVEWAYS SHALL BE SWEPT BACK INTO THE EXCAVATED AREA.
3. CONTRACTOR SHALL CLEAN UP THE EXISTING STREET INTERSECTIONS AND DRIVEWAYS DAILY, AS NECESSARY, TO REMOVE ANY EXCESS MUD, SILT OR ROCK TRACKED FORM THE EXCAVATED AREA.
4. CONTRACTOR SHALL FOLLOW GOOD HOUSEKEEPING PRACTICES DURING THE CONSTRUCTION OF THE PROJECT, ALWAYS CLEANING UP DIRT AND LOOSE MATERIAL AS CONSTRUCTION PROGRESSES.
5. CONTRACTOR TO INSPECT AND MAINTAIN THE AREAS LISTED BELOW AT LEAST ONCE EVERY FOURTEEN (14) CALENDAR DAYS AND WITHIN 24 HOURS OF THE END OF A STORM EVENT OF 0.5 INCHES OR GREATER.
   - DISTURBED AREAS OF THE CONSTRUCTION SITE THAT HAVE NOT BEEN FINALLY STABILIZED.
   - AREAS USED FOR STORAGE OF MATERIALS THAT ARE EXPOSED TO PRECIPITATION.
   - STRUCTURAL CONTROL MEASURES.
   - LOCATIONS WHERE VEHICLES ENTER OR EXIT THE SITE.
6. CONTRACTOR TO BE RESPONSIBLE TO MAINTAIN EXISTING DITCHES AND OR CULVERTS FOR UNOBSTRUCTED DRAINAGE AT ALL TIMES. WHERE SODDING IS DISTURBED BY EXCAVATION ON BACKFILLING OPERATIONS, SUCH AREAS SHALL BE REPLACED BY SEEDING OR SODDING. SLOPES 4:1 OR STEEPER SHALL BE REPLACED BY BLOCK SODDING.
7. SEE SHEET GC-02 FOR DETAILS.

NO.	DATE	REVISION	APP.

NOTICE:
FOR YOUR SAFETY, YOU ARE REQUIRED BY TEXAS LAW TO CALL 811 AT LEAST 48 HOURS BEFORE YOU DIG SO THAT UNDERGROUND LINES CAN BE MARKED. THIS SIGNATURE DOES NOT FULFILL YOUR OBLIGATION TO CALL 811

VERIFICATION OF PRIVATE UTILITY LINES

Date

CenterPoint Energy natural gas utilities shown. (Gas service lines are not shown). This signature not be used for conflict verification.

Signature valid for six months.

Date

CenterPoint Energy/UNDERGROUND Electrical Facilities Verification ONLY. (This signature verifies existing underground facilities – not to be used for conflict verification)

Signature valid for six months.

Date

Approved for AT&T underground conduit facilities only.
Signature valid for one year.

PAPE-DAWSON
2107 CITYWEST BLVD, 3RD FLR I HOUSTON, TX 77042 I 713.428.2400
TEXAS ENGINEERING FIRM #470 I TEXAS SURVEYING FIRM #10028800

PAPE-DAWSON
2107 CITYWEST BOULEVARD
3RD FLR
HOUSTON, TEXAS 77402
713-428-2400
TX FIRM #470

SURVEYED BY:
PAPE-DAWSON
FB NO. 24-018

THIS DOCUMENT IS RELEASED FOR INTERIM REVIEW UNDER THE AUTHORIZATION OF AMIRHOSSEIN SHOKOUHI, P.E. (#139835) AND IS **NOT TO BE USED FOR CONSTRUCTION.**

CITY OF HOUSTON
HOUSTON PUBLIC WORKS

LIFT STATION REHABILITATION AND RECONSTRUCTION
BEN'S BRANCH, WOODLAND RIDGE, ELMWOOD HILLS, FOREST SHORES, TRAIL RIVER, RIVERLAWN

~~MECHANICAL~~ ~~ELECTRICAL~~

ELMWOOD HILLS LIFT STATION SWPPP

WBS NUMBER	FOR CITY OF HOUSTON USE ONLY
R-000267-0180-3	
DRAWING SCALE	
AS NOTED	
CITY OF HOUSTON PM	
BRENDA JOHNSON P.E.	
SHEET NO. 158 OF 338	

EH-C-09

FILE PATH: K:\Projects\423\77 COH LS Package\00\03 CADD\Plans\Sheets\05 Elmwood Hills\ELM SWPPP- C - 4237700.dwg

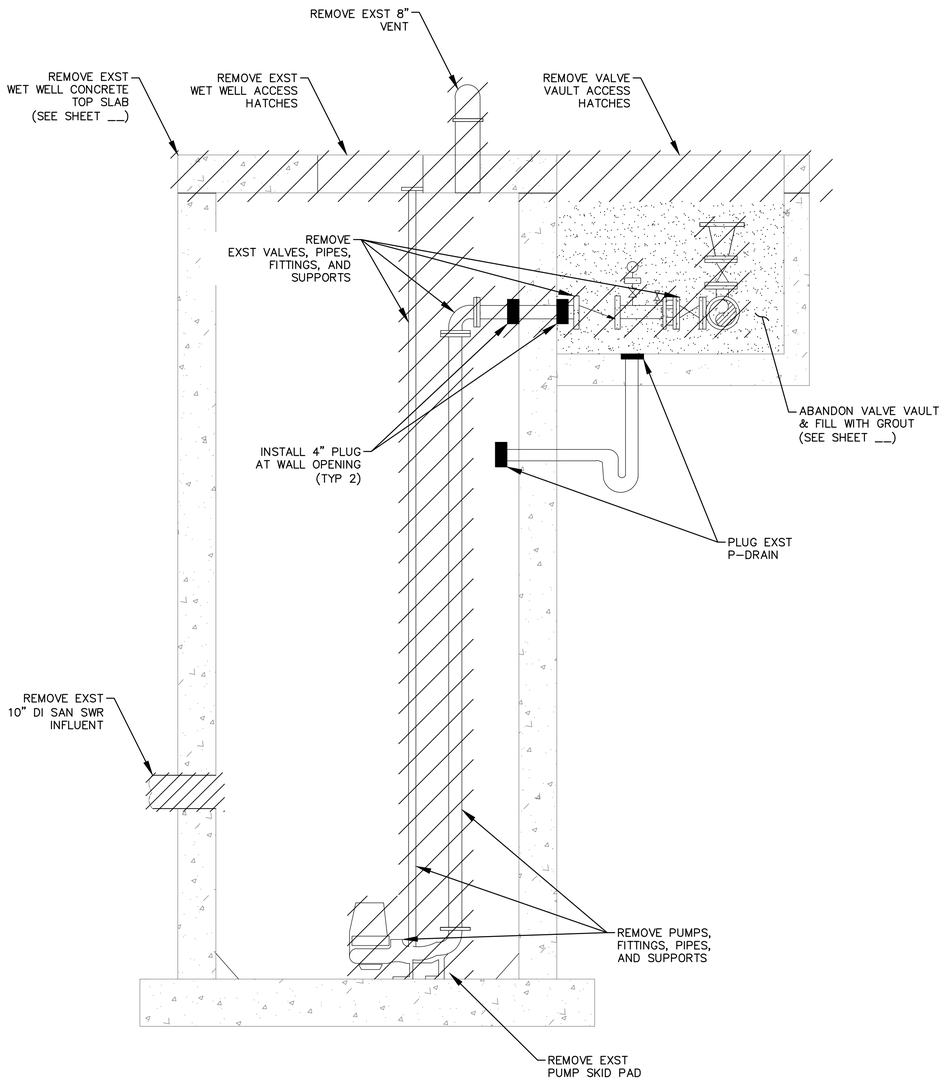

SECTION A

SCALE 1/2"=1'-0"

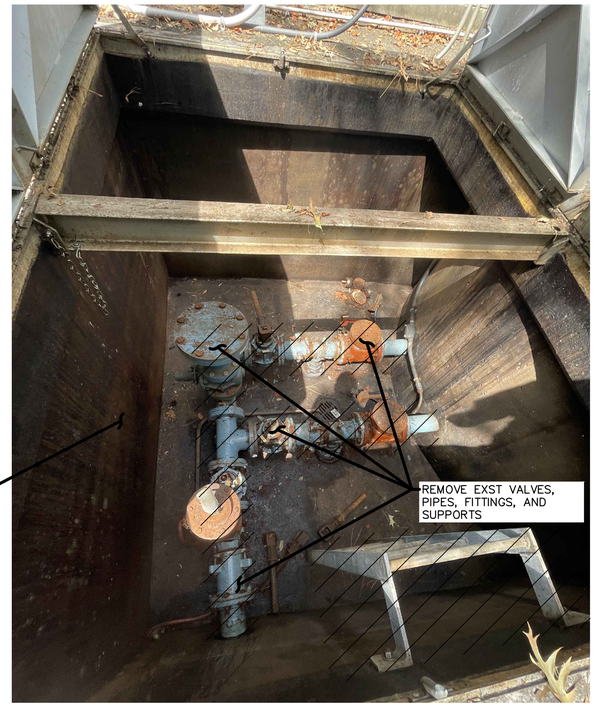

VALVE VAULT

NTS

LEGEND

TO BE REMOVED

NO.	DATE	REVISION	APP.

NOTICE:

FOR YOUR SAFETY, YOU ARE REQUIRED BY TEXAS LAW TO CALL 811 AT LEAST 48 HOURS BEFORE YOU DIG SO THAT UNDERGROUND LINES CAN BE MARKED. THIS SIGNATURE DOES NOT FULFILL YOUR OBLIGATION TO CALL 811

VERIFICATION OF PRIVATE UTILITY LINES

Date

CenterPoint Energy natural gas utilities shown. (Gas service lines are not shown). This signature not be used for conflict verification.

Signature valid for six months.

Date

CenterPoint Energy/UNDERGROUND Electrical Facilities Verification ONLY. (This signature verifies existing underground facilities – not to be used for conflict verification)

Signature valid for six months.

Date

Approved for AT&T underground conduit facilities only.
Signature valid for one year.

PAPE-DAWSON

2107 CITYWEST BLVD, 3RD FLR I HOUSTON, TX 77042 I 713.428.2400

TEXAS ENGINEERING FIRM #470 I TEXAS SURVEYING FIRM #10028800

PAPE-DAWSON
2107 CITYWEST BOULEVARD
3RD FLR
HOUSTON, TEXAS 77402
713-428-2400
TX FIRM #470

SURVEYED BY:
PAPE-DAWSON
FB NO. 24-018

THIS DOCUMENT IS RELEASED FOR INTERIM REVIEW UNDER THE AUTHORIZATION OF AMIRHOSSEIN SHOKOUHI, P.E. (#139835) AND IS **NOT TO BE USED FOR CONSTRUCTION.**

CITY OF HOUSTON

HOUSTON PUBLIC WORKS

LIFT STATION REHABILITATION AND RECONSTRUCTION
BEN'S BRANCH, WOODLAND RIDGE, ELMWOOD HILLS, FOREST SHORES, TRAIL RIVER, RIVERLAWN

~~MECHANICAL~~

ELMWOOD HILLS LIFT STATION DEMOLITION SECTIONS

WBS NUMBER	FOR CITY OF HOUSTON USE ONLY
R-000267-0180-3	
DRAWING SCALE	
AS NOTED	
CITY OF HOUSTON PM	
BRENDA JOHNSON P.E.	
SHEET NO. 163 OF 338	

EH-M-01

FILE PATH: K:\Projects\423\77 COH LS Package\00\03 CADD\Plans\Sheets\05 Elmwood Hills\ELM EXIST DEMO SECTION-M-4237700.dwg

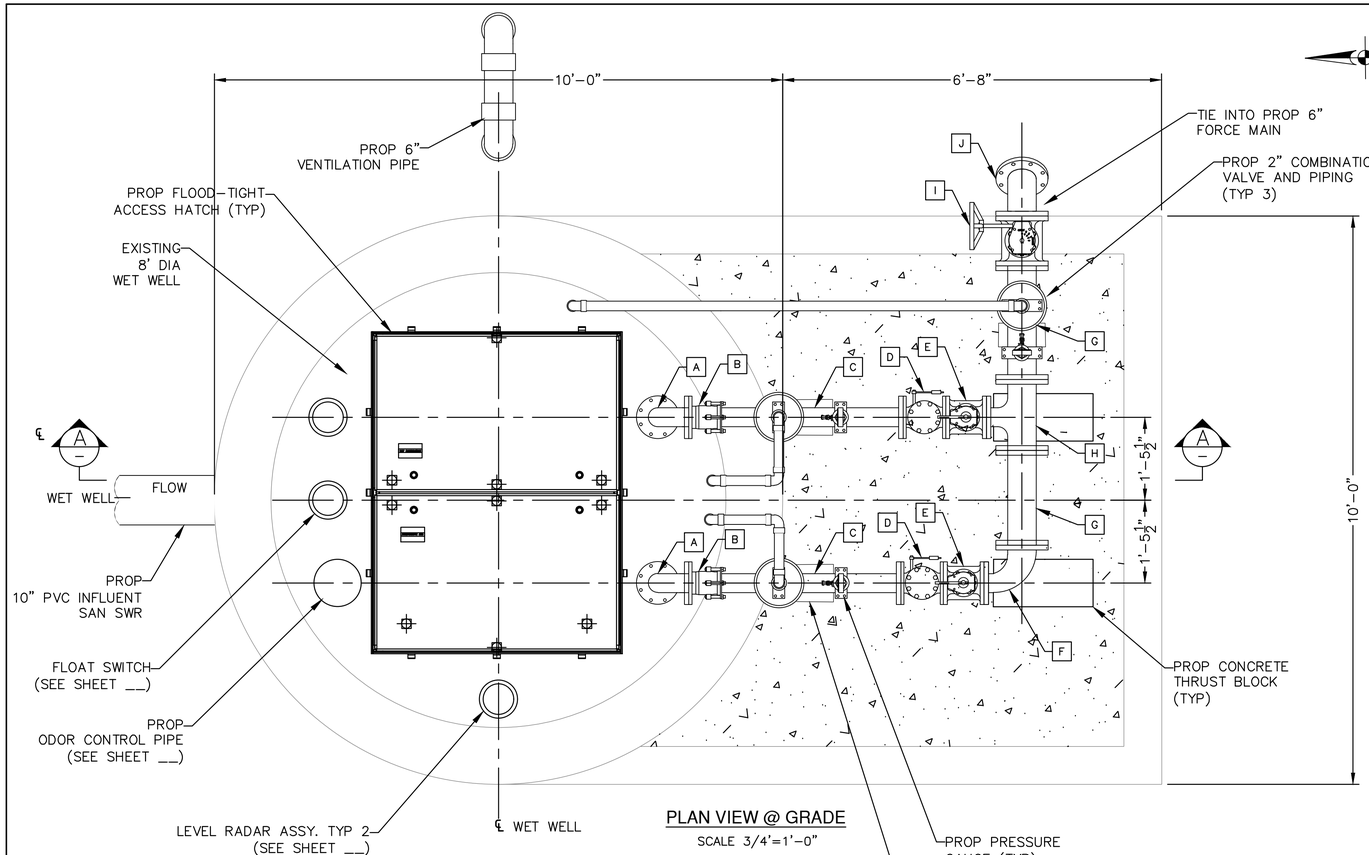

PLAN VIEW @ GRADE

SCALE 3/4'=1'-0"

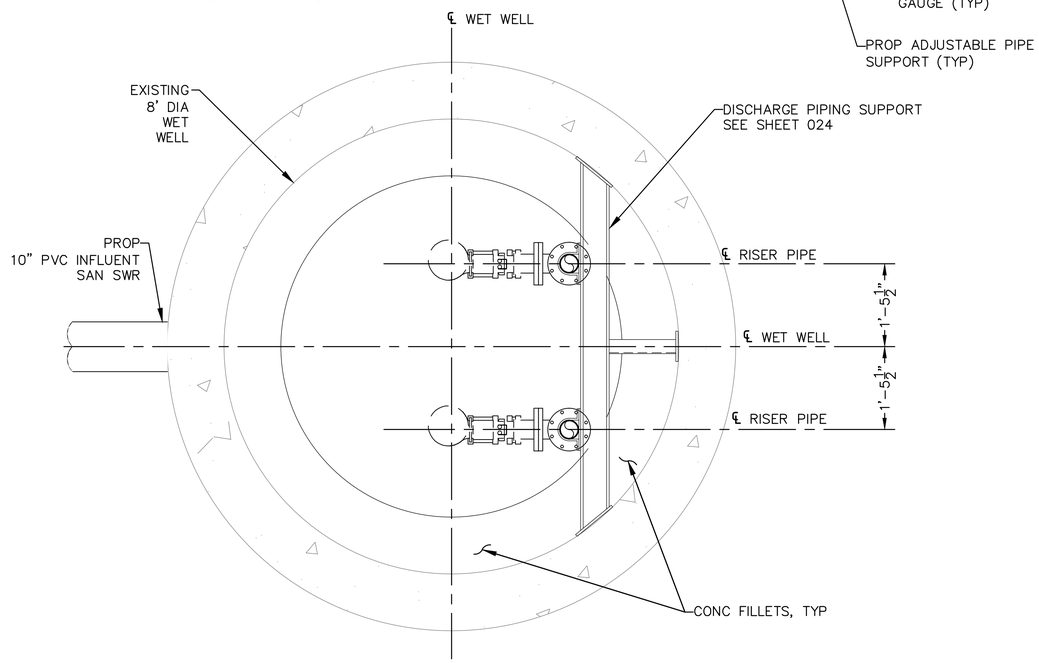

SECTION VIEW @ ELEVATION 49.00'

SCALE 3/4'=1'-0"

PIPE AND FITTING SCHEDULE		
MARK	DESCRIPTION	CONNECTION
A	4"x90° BEND	FLG/FLG
B	4" RESTRAINED FLANGED COUPLING ADAPTOR	FCA501 OR APPROVED EQUAL
C	4" SPOOL	FLG/FLG
D	4" CHECK VALVE	FLG
E	4" PLUG VALVE	FLG
F	4"x6"x90° REDUCING BEND	FLG/FLG
G	6" SPOOL	FLG/FLG
H	4"x6" REDUCING TEE	FLG
I	6" PLUG VALVE	FLG
J	6"x45° BEND	FLG
K	4"x45° BEND	FLG
L	4"x45° BEND	FLG/FLG
M	4"x6" REDUCER	FLG/FLG

LIFT STATION NOTES:

1. ALL SUPPORT BRACKETS, HARDWARE, ANCHORS, BOLTS, ETC. INSIDE WET WELL SHALL BE TYPE 316 STAINLESS STEEL.
2. ALL INTERIOR SURFACES OF CONCRETE WET WELL SHALL BE COATED WITH AN 80 MIL (MIN.) COAT OF RAVEN 405 ULTRA HIGH BUILD EPOXY COATING, SPRAY WALL EPOXY COATING, OR APPROVED EQUAL.
3. ALL PUMP DISCHARGE PIPING IN WET WELL AND VALVE PAD TO BE FLANGED (INSIDE WET WELL/PAD) OR TR FLEX RESTRAINED MECHANICAL JOINT (WHEN BURIED) DUCTILE IRON PIPING. ALL DUCTILE IRON PIPING SHALL BE EPOXY LINED WITH TNEMEC SERIES 431 PERMA-SHIELD PL CERAMIC EPOXY OR APPROVED EQUAL.
4. ALL EXPOSED DUCTILE IRON PIPING, FITTINGS, AND VALVES SHALL BE SANDBLASTED AND COATED WITH TWO (2) COATS OF TNEMEC SERIES 27WB TYPOXY APPLIED AT 6.0 TO 8.0 DRY MILS AND TOPCOATED WITH TNEMEC SERIES 740 UVX APPLIED AT 3.0 TO 5.0 DRY MILS. FINAL COLOR TO BE APPROVED BY THE DISTRICT. SHOP PRIMING WITH TNEMEC SERIES N140 IS ACCEPTABLE. BITUMASTIC COATING SHALL NOT BE APPLIED TO EXPOSED DI PIPING.
5. ALL BURIED DUCTILE IRON PIPING, FITTINGS, AND VALVES SHALL BE WRAPPED WITH A POLYETHYLENE ENCASEMENT IN ACCORDANCE WITH THE LATEST REVISION OF AWWA C105.
6. ALL MECHANICAL JOINT FITTINGS TO BE RESTRAINED USING SERIES 1100 OR 2000PV MEGALUG JOINT RESTRAINTS.
7. PUMP SPACING DIMENSIONS SHOWN ARE APPROXIMATE. ACTUAL DIMENSIONS SHALL BE DETERMINED BY SPECIFIC PUMP MANUFACTURER.
8. PRIMARY LEVEL CONTROL WILL BE PROVIDED BY A SUBMERSIBLE LEVEL TRANSDUCER WITH OPERATION POINTS AS DETERMINED BY ENGINEER. MULTITRODE PROBES ARE FOR BACKUP OPERATION ONLY. REFER TO ELECTRICAL SPECIFICATIONS FOR EQUIPMENT INFORMATION.
9. FLOOD-TIGHT ACCESS HATCH AS SHOWN OR AS REQUIRED BY PUMP MANUFACTURER. DIMENSION MAY VARY PER HATCH MANUFACTURER.

NO.	DATE	REVISION	APP.

NOTICE:
FOR YOUR SAFETY, YOU ARE REQUIRED BY TEXAS LAW TO CALL 811 AT LEAST 48 HOURS BEFORE YOU DIG SO THAT UNDERGROUND LINES CAN BE MARKED. THIS SIGNATURE DOES NOT FULFILL YOUR OBLIGATION TO CALL 811

VERIFICATION OF PRIVATE UTILITY LINES

Date

CenterPoint Energy natural gas utilities shown. (Gas service lines are not shown). This signature not be used for conflict verification.

Signature valid for six months.

Date

CenterPoint Energy/UNDERGROUND Electrical Facilities Verification ONLY. (This signature verifies existing underground facilities – not to be used for conflict verification)

Signature valid for six months.

Date

Approved for AT&T underground conduit facilities only.
Signature valid for one year.

PAPE-DAWSON
2107 CITYWEST BLVD, 3RD FLR I HOUSTON, TX 77042 I 713.428.2400
TEXAS ENGINEERING FIRM #470 I TEXAS SURVEYING FIRM #10028800

PAPE-DAWSON
2107 CITYWEST BOULEVARD
3RD FLR
HOUSTON, TEXAS 77402
713-428-2400
TX FIRM #470

SURVEYED BY:
PAPE-DAWSON
FB NO. 24-018

THIS DOCUMENT IS RELEASED FOR INTERIM REVIEW UNDER THE AUTHORIZATION OF AMIRHOSSEIN SHOKOUHI, P.E. (#139835) AND IS **NOT TO BE USED FOR CONSTRUCTION.**

CITY OF HOUSTON
HOUSTON PUBLIC WORKS

LIFT STATION REHABILITATION AND RECONSTRUCTION
BEN'S BRANCH, WOODLAND RIDGE, ELMWOOD HILLS, FOREST SHORES, TRAIL RIVER, RIVERLAWN

MECHANICAL

ELMWOOD HILLS LIFT STATION PROPOSED PLAN

WBS NUMBER	FOR CITY OF HOUSTON USE ONLY
R-000267-0180-3	
DRAWING SCALE	
AS NOTED	
CITY OF HOUSTON PM	
BRENDA JOHNSON P.E.	
SHEET NO. 164 OF 338	

EH-M-02

FILE PATH: K:\Projects\423\77 COH LS Package\00\03 CADD\Plans\Sheets\05 Elmwood Hills\ELM PROP PLAN VIEW & SECTION-M-4237700.dwg

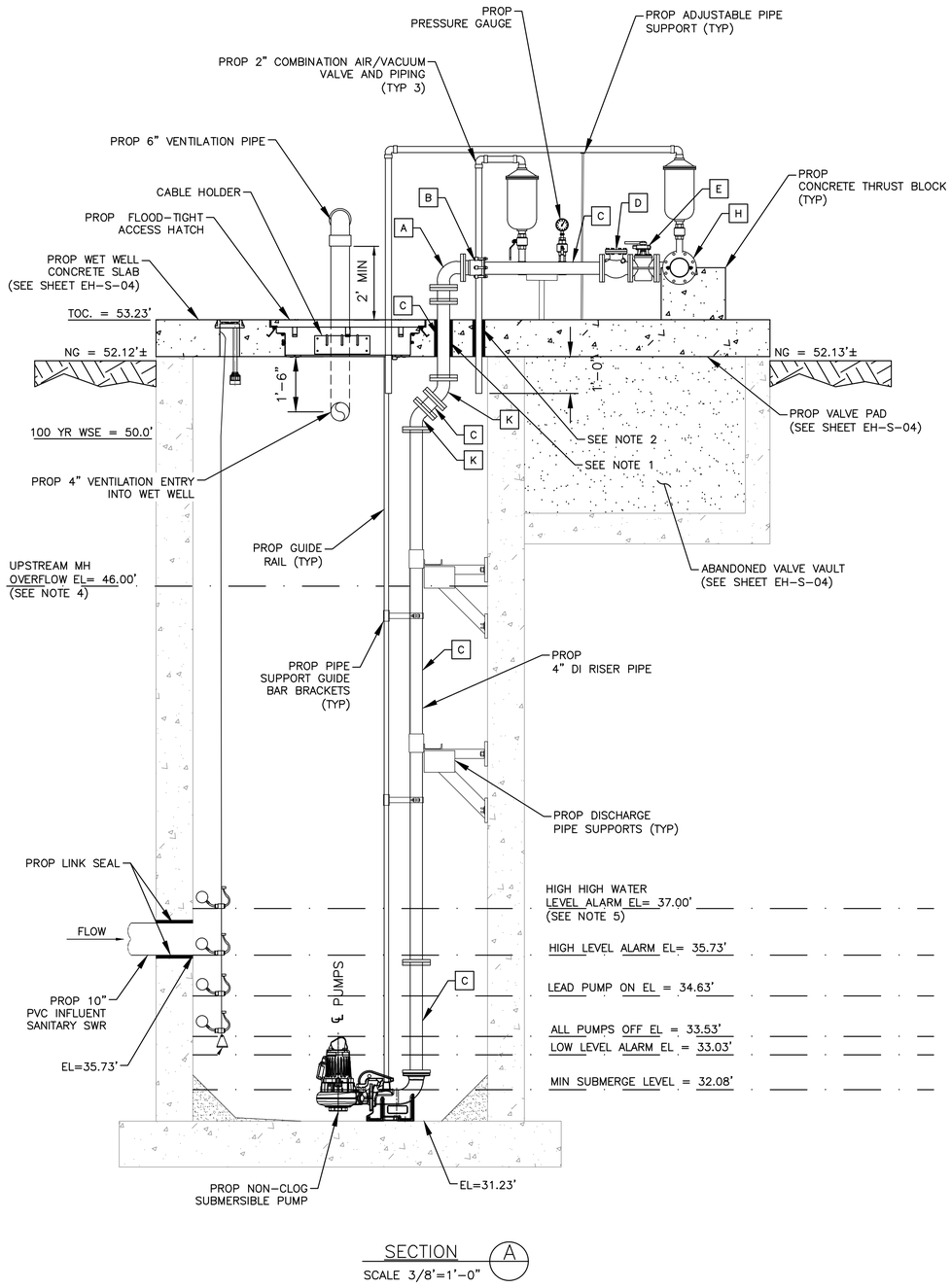

SECTION A
SCALE 3/8"=1'-0"

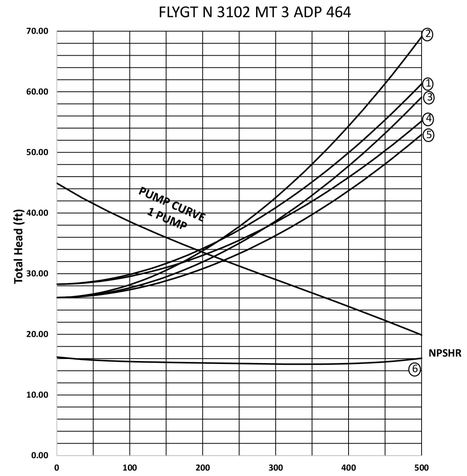

PUMP OPERATION CURVES

PUMP CURVE NOTES:

1. LOW NORMAL OPERATING LEVEL C=120 – DESIGN.
2. HIGH NORMAL OPERATING LEVEL C=100 – INFORMATION ONLY (TCEQ)
3. HIGH NORMAL OPERATING LEVEL C=100 – DESIGN
4. HIGH NORMAL OPERATING LEVEL C=140 – INFORMATION ONLY
5. EMERGENCY FLOODED OPERATING LEVEL C=140 – MAXIMUM DISCHARGE
6. NET POSITIVE SUCTION HEAD AVAILABLE (NPSHA) BASED ON NORMAL OPERATING WATER LEVELS
7. PUMP CURVES ARE MODIFIED FOR STATION LOSSES.

NOTE:

1. SLEEVED OPENING, SEAL W/ LINK-SEAL OR APPROVED EQUAL. AT TOP OF SLAB FILL VOID AROUND SEAL W/ GROUT & RECESS APPROX ¼" BELOW TOP OF SLAB. (SEE SHEET GM-03)
2. SLEEVED WET WELL PENETRATION (SEE SHEET GM-03)
3. PROP ALL PUMPS OFF LEVEL 1 FT HIGHER THE PUMP MIN SUBMERGE LEVEL
4. UPSTREAM MH OVERFLOW ELEVATION PROVIDED BY CITY OF HOUSTON WASTEWATER PLANNING DEPARTMENT.
5. HIGH HIGH WATER LEVEL ALARM ELEVATION TO PROVIDE MINIMUM 2 HOURS RESPONSE TIME PRIOR TO UPSTREAM MANHOLE OVERFLOW ELEVATION
6. SEE SHEET EH-M-03 FOR LIFT STATION NOTES.

PUMP DATA TABLE

PUMP CHARACTERISTICS	PUMP NO. 1	PUMP NO. 2
MOTOR DATA NOMINAL SIZE (HP) MAX SPEED (RPM)	 5 1760	 5 1760
SOLIDS PASSAGE MIN SPHERE (IN)	 <3	 <3
CAPACITY (GPM) DESIGN RUNOUT	 243.2 590.7	 243.2 590.7
DISCHARGE HEAD (FT) DESIGN RUNOUT SHUT OFF	 37.3 20.4 52.00	 37.3 20.4 52.00
EFFICIENCY (%) DESIGN	 69.9	 69.9
NPSHR (FT) DESIGN RUNOUT	 15.1 32.0	 15.1 32.0
PUMP CYCLE TIME	6	6

STATION OPERATION TABLES

RISING LEVEL CYCLE

WATER LEVEL DEPTH	WATER LEVEL ELEVATION	ACTION	PUMP(S) IN OPERATION
2.30	33.53	PUMPS OFF LEVEL – NO ACTION	ALL PUMPS ARE OFF
3.40	34.63	LEAD PUMP TURNS ON	LEAD PUMP ON
4.50	35.73	HIGH WATER ALARM ON	HIGH WATER ALARM SOUND
5.77	37.00	HIGH HIGH LEVEL ALARM (FLOAT ON LEVEL)	ALL PUMPS ON (FLOATS)

FALLING LEVEL CYCLE

WATER LEVEL DEPTH	WATER LEVEL ELEVATION	ACTION	PUMP(S) IN OPERATION
5.27	36.50	FLOAT LEVEL OFF	LEAD & SECOND PUMPS OFF
4.50	35.73	HIGH WATER LEVEL ALARM OFF	LEAD & SECOND PUMPS ON
3.40	34.63	LEAD PUMP TURNS OFF	SECOND PUMP ON
1.80	33.03	LOW LEVEL ALARM	–

PIPE AND FITTING SCHEDULE

MARK	DESCRIPTION	CONNECTION
A	4"x90° BEND	FLG/FLG
B	4" RESTRAINED FLANGED COUPLING ADAPTOR	FCA501 OR APPROVED EQUAL
C	4" SPOOL	FLG/FLG
D	4" CHECK VALVE	FLG
E	4" PLUG VALVE	FLG
F	4"x6"x90° REDUCING BEND	FLG/FLG
G	6" SPOOL	FLG/FLG
H	4"x6" REDUCING TEE	FLG
I	6" PLUG VALVE	FLG
J	6"x45° BEND	FLG
K	4"x45° BEND	FLG
L	4"x6"x90° REDUCING BEND	FLG/FLG
M	PUMP BASE	FLG/FLG

NOTICE:
FOR YOUR SAFETY, YOU ARE REQUIRED BY TEXAS LAW TO CALL 811 AT LEAST 48 HOURS BEFORE YOU DIG SO THAT UNDERGROUND LINES CAN BE MARKED. THIS SIGNATURE DOES NOT FULFILL YOUR OBLIGATION TO CALL 811

VERIFICATION OF PRIVATE UTILITY LINES

Date

CenterPoint Energy natural gas utilities shown. (Gas service lines are not shown). This signature not be used for conflict verification.

Signature valid for six months.

Date

CenterPoint Energy/UNDERGROUND Electrical Facilities Verification ONLY. (This signature verifies existing underground facilities – not to be used for conflict verification)

Signature valid for six months.

Date

Approved for AT&T underground conduit facilities only.
Signature valid for one year.

PAPE-DAWSON
2107 CITYWEST BLVD, 3RD FLR I HOUSTON, TX 77042 I 713.428.2400
TEXAS ENGINEERING FIRM #470 I TEXAS SURVEYING FIRM #10028800

PAPE-DAWSON
2107 CITYWEST BOULEVARD
3RD FLR
HOUSTON, TEXAS 77402
713-428-2400
TX FIRM #470

SURVEYED BY:
PAPE-DAWSON
FB NO. 24-018

THIS DOCUMENT IS RELEASED FOR INTERIM REVIEW UNDER THE AUTHORIZATION OF AMIRHOSSEIN SHOKOUHI, P.E. (#139835) AND IS **NOT TO BE USED FOR CONSTRUCTION.**

CITY OF HOUSTON
HOUSTON PUBLIC WORKS

LIFT STATION REHABILITATION AND RECONSTRUCTION
BEN'S BRANCH, WOODLAND RIDGE, ELMWOOD HILLS, FOREST SHORES, TRAIL RIVER, RIVERLAWN

MECHANICAL

ELMWOOD HILLS LIFT STATION PROPOSED SECTIONS

WBS NUMBER	FOR CITY OF HOUSTON USE ONLY
R-000267-0180-3	
DRAWING SCALE	
AS NOTED	
CITY OF HOUSTON PM	
BRENDA JOHNSON P.E.	
SHEET NO. 165 OF 338	

EH-M-03

NO.	DATE	REVISION	APP.

FILE PATH: K:\Projects\423\77 COH LS Package\00\03 CADD\Plans\Sheets\05 Elmwood Hills\ELM PROP PLAN VIEW & SECTION-M-4237700.dwg

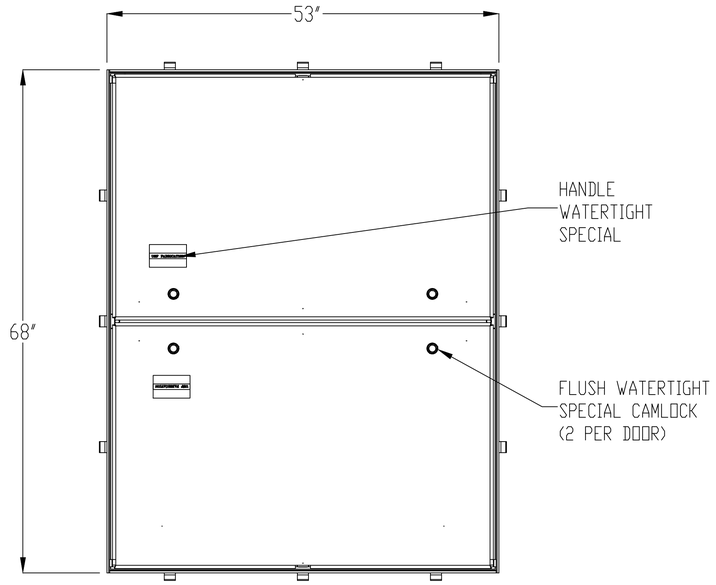

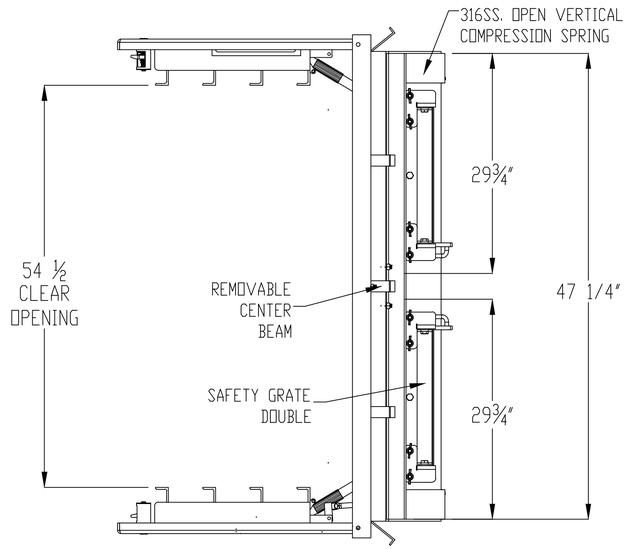

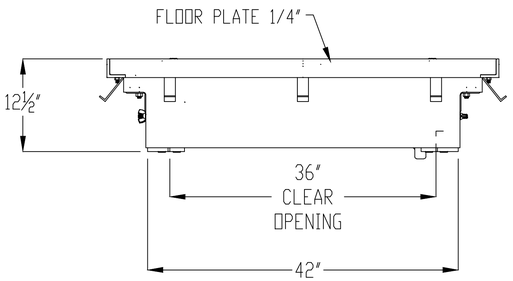

NOTES:
1- MATERIAL: ALUMINUM
MILL FINISH
2- LOADING DESIGNED FOR OFF STREET
LOCATIONS WHICH MAY OCCASIONALLY
RECEIVE H-20 WHEEL LOADS.
3- 316 STAINLESS STEEL BOLTS & NUTS
4- AREA OF FRAME IN CONTACT WITH CONCRETE
TO BE PAINTED WITH BITUMINOUS COATING
5- THIS DESIGN HAS BEEN TESTED AND CERTIFIELD TO BE FLOOD TIGHT
FOR UP TO 13FT. OF WATER, WITH ZERO LEAKAGE.
6- GASKET AND FRAME MUST BE FREE OF ANY DIRT OR DEBRIS PRIOR TO
CLOSING AND ALL CAM LOCKS MUST BE FULLY ENGAGED TO ENSURE
MAXIMUM FLOOD RESISTANCE

THIS DOCUMENT IS THE PROPERTY OF U.S.F. FABRICATION, INC AND CONTAINS PROPRIETARY INFORMATION. IT SHALL NOT BE MODIFIED, COPIED, FURNISHED NOR DISTRIBUTED (IN WHOLE OR IN PART) WITHOUT PROPER AUTHORIZATION OF U.S.F. FABRICATION, INC.

INTERPRET DIMENSIONS AND TOLERANCES PER ASME Y14.5M

BREAK ALL SHARP CORNERS & EDGES TO 0.01

TOLERANCES UNLESS OTHERWISE SPECIFIED:
INCHES = +/- 1/16
1/16 = +/- 1/32
1/32 = +/- 1/64

COPYRIGHT © 2025 ALL RIGHTS RESERVED

U.S.F. FABRICATION INC.
HIALEAH, FLORIDA

HATCH ZAHDRB 42X63
ASSEMBLY

DRAWN BY:	SCALE: 1:16	SHEET 2 OF 2	DATE: 9/29/25	
JG				
APP'D BY: JG	DWG. NO: 1000290590		SHEET SIZE: B	REV: 0

TEMPORARY BENCHMARK DESCRIPTION

LEGEND

NO.	DATE	REVISION	APP.

NOTICE:
FOR YOUR SAFETY, YOU ARE REQUIRED BY TEXAS LAW TO CALL 811 AT LEAST 48 HOURS BEFORE YOU DIG SO THAT UNDERGROUND LINES CAN BE MARKED. THIS SIGNATURE DOES NOT FULFILL YOUR OBLIGATION TO CALL 811

VERIFICATION OF PRIVATE UTILITY LINES

Date

CenterPoint Energy natural gas utilities shown. (Gas service lines are not shown). This signature not be used for conflict verification.

Signature valid for six months.

Date

CenterPoint Energy/UNDERGROUND Electrical Facilities Verification ONLY. (This signature verifies existing underground facilities – not to be used for conflict verification)

Signature valid for six months.

Date

Approved for AT&T underground conduit facilities only.
Signature valid for one year.

PAPE-DAWSON
2107 CITYWEST BLVD, 3RD FLR I HOUSTON, TX 77042 I 713.428.2400
TEXAS ENGINEERING FIRM #470 I TEXAS SURVEYING FIRM #10028800

PAPE-DAWSON
2107 CITYWEST BOULEVARD
3RD FLR
HOUSTON, TEXAS 77402
713-428-2400
TX FIRM #470

SURVEYED BY:
PAPE-DAWSON
FB NO. 24-018

THIS DOCUMENT IS RELEASED FOR INTERIM REVIEW UNDER THE AUTHORIZATION OF AMIRHOSSEIN SHOKOUHI, P.E. (#139835) AND IS **NOT TO BE USED FOR CONSTRUCTION.**

CITY OF HOUSTON
HOUSTON PUBLIC WORKS

LIFT STATION REHABILITATION AND RECONSTRUCTION
BEN'S BRANCH, WOODLAND RIDGE, ELMWOOD HILLS, FOREST SHORES, TRAIL RIVER, RIVERLAWN

CIVIL

ELMWOOD HILLS LIFT STATION FLOOD-TIGHT ACCESS HATCH DETAIL

WBS NUMBER	FOR CITY OF HOUSTON USE ONLY
R-000267-0180-3	
DRAWING SCALE	
AS NOTED	
CITY OF HOUSTON PM	
BRENDA JOHNSON P.E.	
SHEET NO. OF 338	

FILE PATH: K:\Projects\423\77 COH LS Package\00\03 CADD\Plans\Sheets\05 Elmwood Hills\ELM ACCESS HATCH DETAIL.dwg

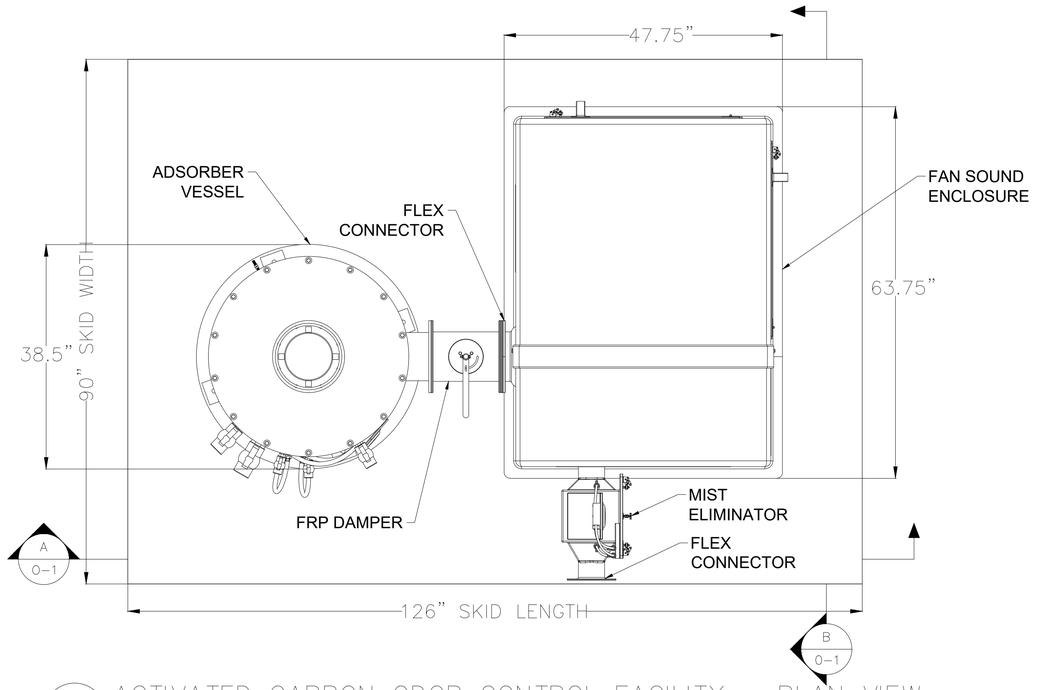

1 / O-1 ACTIVATED CARBON ODOR CONTROL FACILITY – PLAN VIEW

SCALE

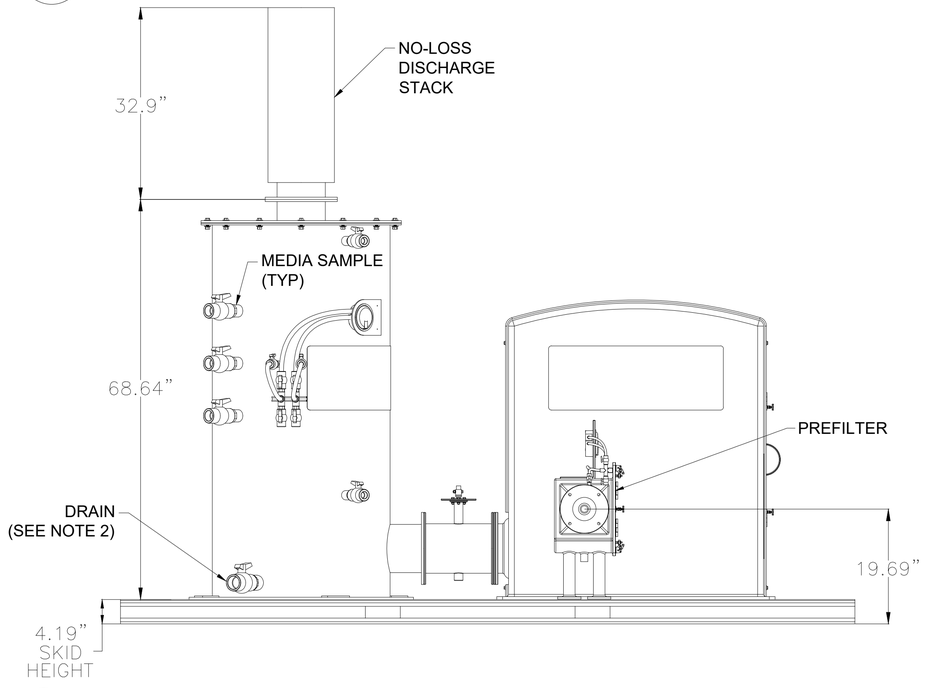

A / O-1 ACTIVATED CARBON ODOR CONTROL FACILITY – SECTION VIEW

SCALE

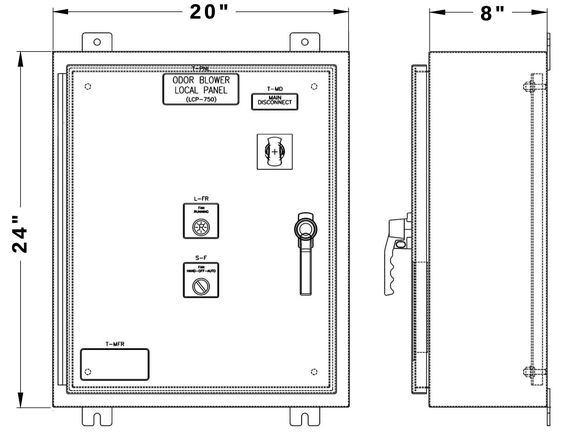

NOTE: PANEL SHALL BE SUPPLIED, LOCATED, AND INSTALLED MINIMUM THREE FEET AWAY FROM BLOWER, OR ODOR CONTROL VESSEL.

2 / O-1 ACTIVATED CARBON CONTROL PANEL

NTS

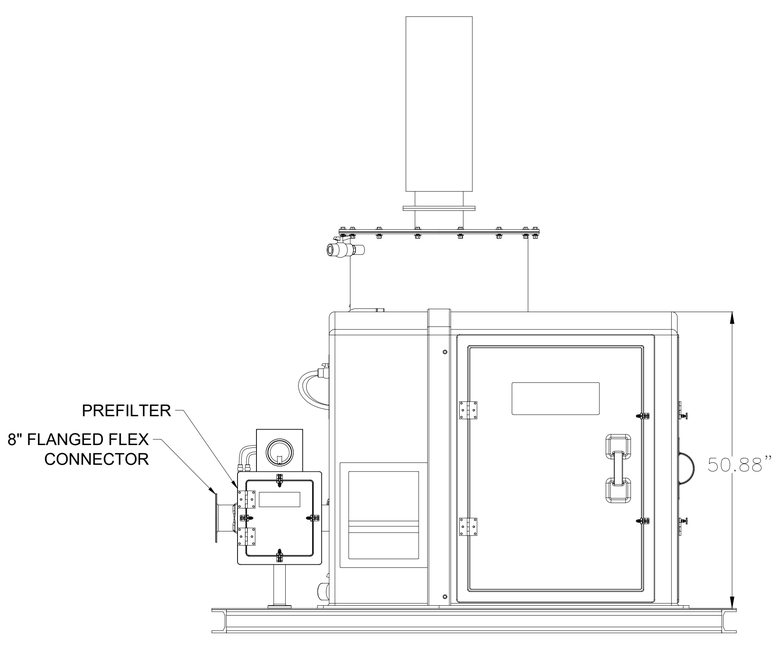

B / O-1 ACTIVATED CARBON ODOR CONTROL FACILITY – SECTION VIEW

SCALE

NOTES:

1. SKID IS 10'–6" LONG BY 7'–6" WIDE. THE SKID AREA CONTAINS THE ACTIVATED CARBON ODOR CONTROL FACILITY.
2. DRAIN PORT TO BE CONNECTED TO DRAIN TO SEWER WITH 6" TRAP AS SHOWN ON SITE PLAN

NO.	DATE	REVISION	APP.

0' 1' 2' 3'

1" = 1'-0" (FULL)

DWG No. O-1

PAPE–DAWSON

2107 CITYWEST BLVD, 3RD FLR I HOUSTON, TX 77042 I 713.428.2400

TEXAS ENGINEERING FIRM #470 I TEXAS SURVEYING FIRM #10028800

V&A Consulting Engineers, Inc.
15720 Park Row, Suite 500
Houston, TX 77084 Tel. (713) 568-9067
F-9154
V&A Project No.: 22-0426

INTERIM REVIEW ONLY
Document incomplete: not intended for regulatory approval, permit, or construction.
JAMES VAUGHAN HARSHMAN
Engineer
153247
Registration Number
09/02/2025
Date

SURVEYED BY:
PAPE–DAWSON ENGINEERS
FB NO. 24–018

V&A CONSULTING ENGINEERS, INC.
Texas Registered Engineering Firm
F-9154

CITY OF HOUSTON
HOUSTON PUBLIC WORKS

LIFT STATION REHABILITATION AND RECONSTRUCTION
BEN'S BRANCH, WOODLAND RIDGE, ELMWOOD HILLS, FOREST SHORES, TRAIL RIVER, RIVERLAWN

ELMWOOD HILLS LIFT STATION ODOR CONTROL SYSTEM CARBON ADSORBER PLAN AND SECTION VIEW

WBS NUMBER	FOR CITY OF HOUSTON USE ONLY
R–000267–0180–3	
DRAWING SCALE	
AS NOTED	
CITY OF HOUSTON PM	
BRENDA JOHNSON P.E.	
SHEET NO. OF	

FILE PATH: E:\Projects\2022\0400 Thru 0499\22-0426 Vor City Of Houston\500 Drawings\DESIGN\60%\60% Odor Sheets\05 Elmwood Hills Odor Control Detail.dwg

ODOR CONTROL SYSTEM ELECTRICAL CONTROL PANEL

LEGEND

- dP-X — Differential Pressure Gauge
- DV-XX — Manual Damper Butterfly Valve
- FC-XX — Flexible Duct Connection
- BV-XX — 2 Way Manual Ball Valve
- FXX_XXX — Flange Connection (size per chart)
- WL_XXX — Water Trap
- Drain

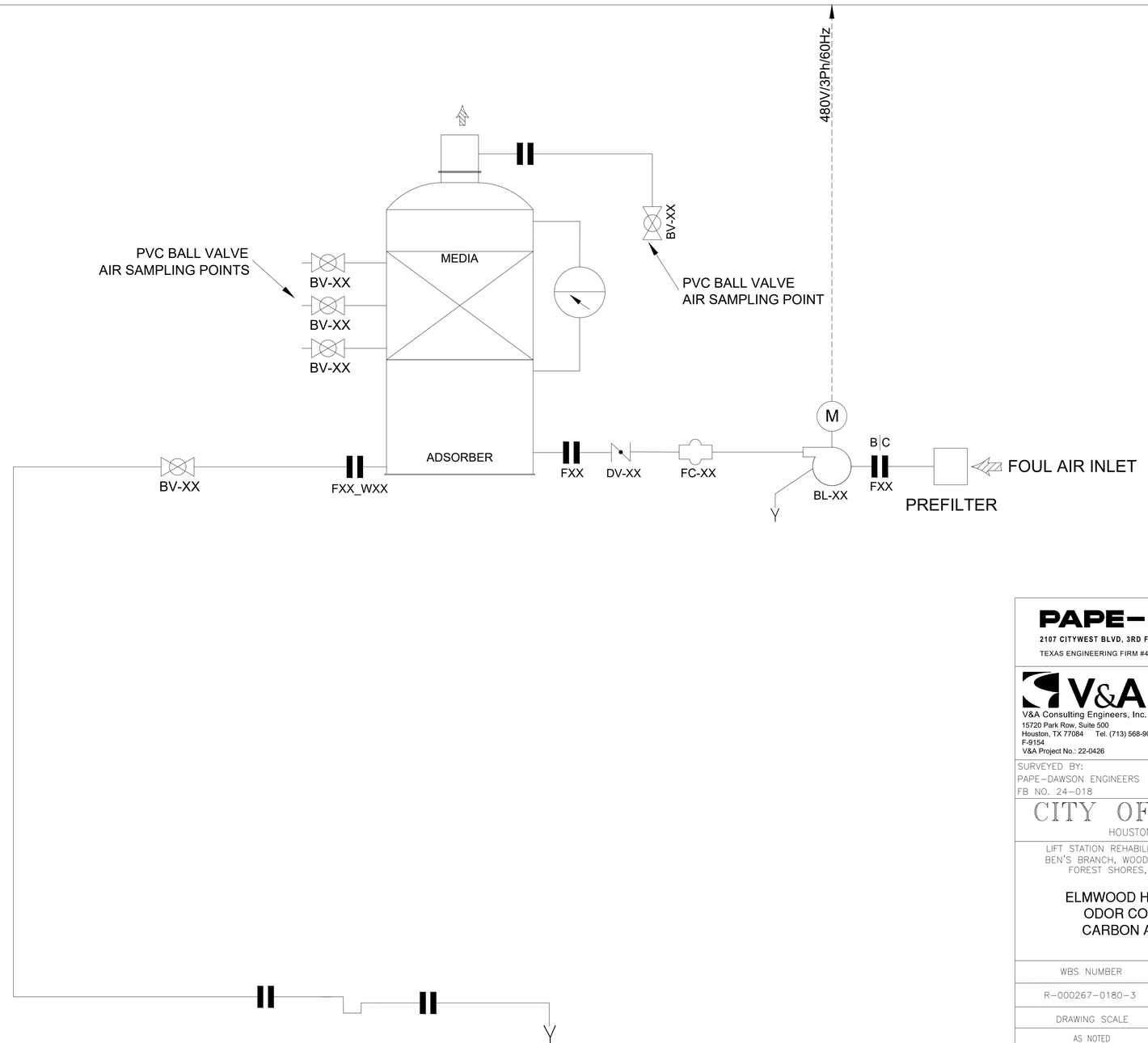

REVISION | NO. | DATE | APP.

PAPE-DAWSON
2107 CITYWEST BLVD, 3RD FLR I HOUSTON, TX 77042 I 713.428.2400
TEXAS ENGINEERING FIRM #470 I TEXAS SURVEYING FIRM #10028800

V&A Consulting Engineers, Inc.
15720 Park Row, Suite 500
Houston, TX 77084 Tel. (713) 568-9067
F-9154
V&A Project No.: 22-0426

INTERIM REVIEW ONLY
Document incomplete; not intended for regulatory approval, permit, or construction.
JAMES VAUGHAN HARSHMAN
Engineer
153247
Registration Number
09/02/2025
Date

SURVEYED BY:
PAPE-DAWSON ENGINEERS
FB NO. 24-018

V&A CONSULTING ENGINEERS, INC.
Texas Registered Engineering Firm
F-9154

CITY OF HOUSTON
HOUSTON PUBLIC WORKS

LIFT STATION REHABILITATION AND RECONSTRUCTION
BEN'S BRANCH, WOODLAND RIDGE, ELMWOOD HILLS, FOREST SHORES, TRAIL RIVER, RIVERLAWN

ELMWOOD HILLS LIFT STATION
ODOR CONTROL SYSTEM
CARBON ADSORBER P&ID

WBS NUMBER	FOR CITY OF HOUSTON USE ONLY
R-000267-0180-3	
DRAWING SCALE	
AS NOTED	
CITY OF HOUSTON PM	
BRENDA JOHNSON P.E.	
SHEET NO. OF	

DWG No.
O-2

FILE PATH: E:\Projects\2022\0400 Thru 0499\22-0426 Var City Of Houston\500 Drawings\DESIGN\60%\60% Odor Sheets\05 Elmwood Hills\22-0426 Var City Of Houston Elmwood Hills Odor Control Detail.dwg

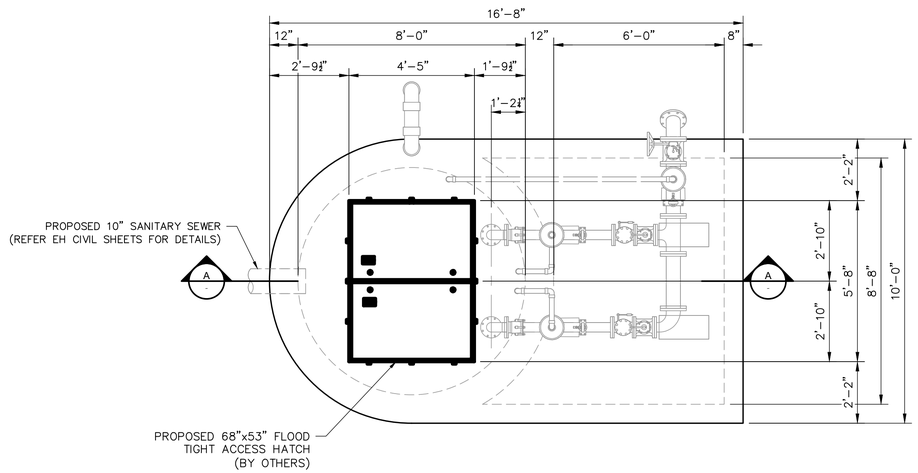

TOP SLAB PLAN VIEW

SCALE: 3/8" = 1'-0"

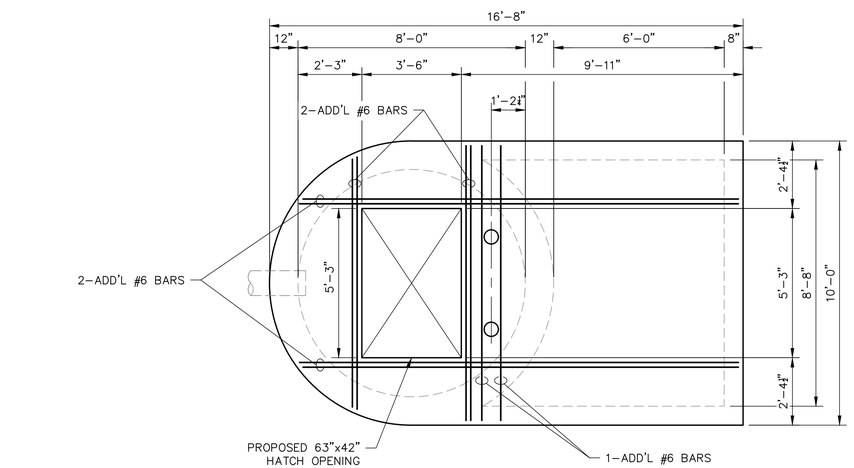

REINFORCING PLAN VIEW

SCALE: 3/8" = 1'-0"

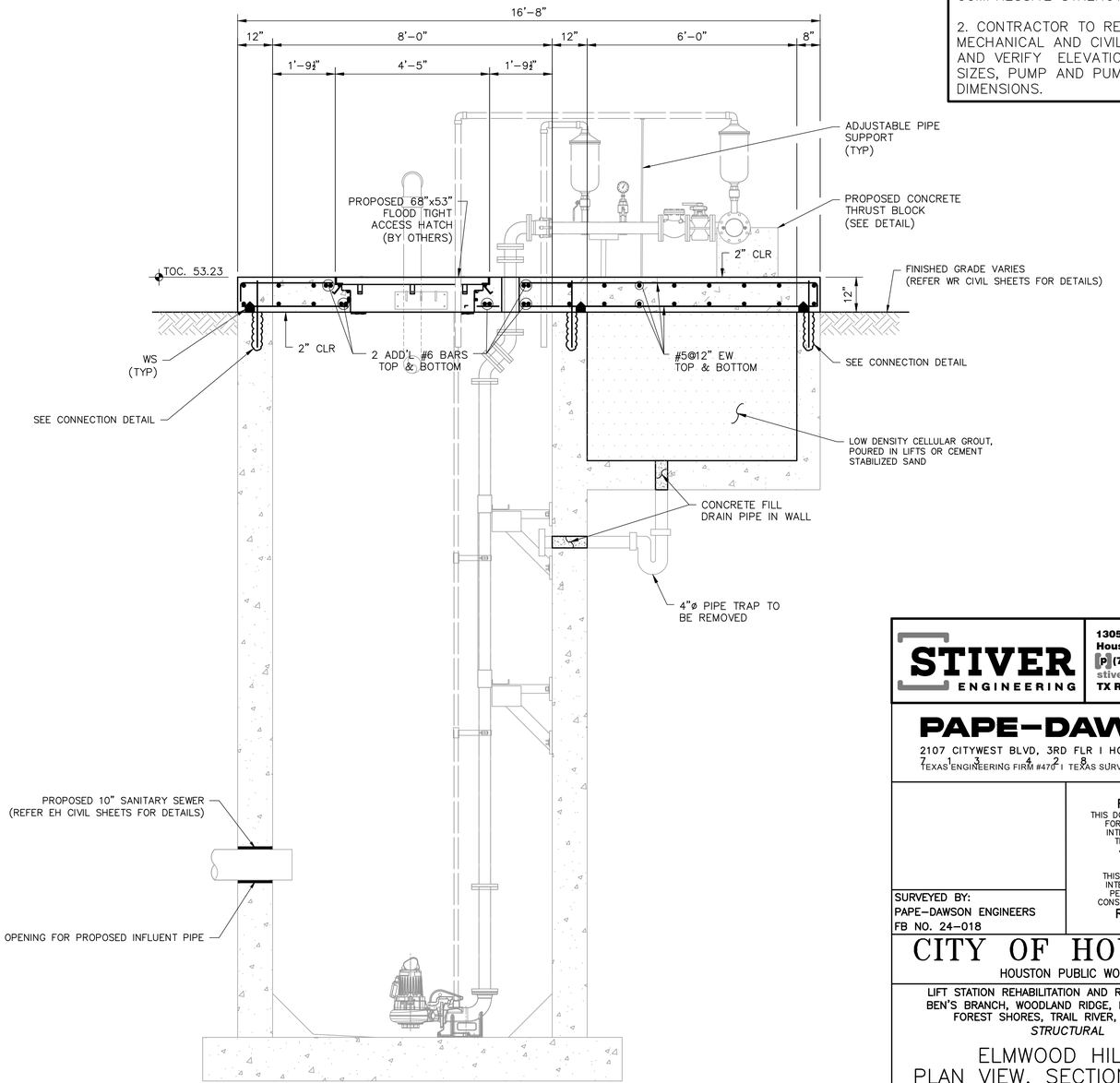

EH SECTION A

SCALE: 1/2" = 1'-0"

NOTE:

1. FLOWABLE BACKFILL MUST BE PLACED IN 12" LIFTS AND MUST COMPLY WITH SPECIFICATION 02322. THE PLACEMENT INTERVALS MUST NOT BE EARLIER THAN 24 HOURS BETWEEN DIFFERENT LIFTS. THE FLOWABLE FILL MUST HAVE 100 PSI COMPRESSIVE STRENGTH AT 7 DAYS.

2. CONTRACTOR TO REFER MECHANICAL AND CIVIL DRAWINGS AND VERIFY ELEVATIONS, PIPE SIZES, PUMP AND PUMP HATCH DIMENSIONS.

STIVER ENGINEERING
1305 Peden Street
Houston, Texas 77006
P (713) 526-3478
stivereng.com
TX Registration No. F-190

PAPE-DAWSON
2107 CITYWEST BLVD, 3RD FLR I HOUSTON, TX 77042 I 713.462.8400
TEXAS ENGINEERING FIRM #470 I TEXAS SURVEYING FIRM #10028800

FOR INTERIM
THIS DOCUMENT IS RELEASED FOR THE PURPOSE OF INTERIM REVIEW UNDER THE AUTHORITY OF JOHN M. STIVER 105179 10/16/25 THIS DOCUMENT IS NOT INTENDED FOR BIDDING, PERMITTING AND/OR CONSTRUCTION PURPOSES
REVIEW ONLY

SURVEYED BY:
PAPE-DAWSON ENGINEERS
FB NO. 24-018

CITY OF HOUSTON
HOUSTON PUBLIC WORKS

LIFT STATION REHABILITATION AND RECONSTRUCTION
BEN'S BRANCH, WOODLAND RIDGE, ELMWOOD HILLS, FOREST SHORES, TRAIL RIVER, RIVERLAWN
STRUCTURAL

ELMWOOD HILLS
PLAN VIEW, SECTION A AND REINFORCING PLAN VIEW

WBS NUMBER	FOR CITY OF HOUSTON USE ONLY
R-000267-0180-3	
DRAWING SCALE	
CITY OF HOUSTON PM	
BRENDA JOHNSON P.E.	
SHEET NO. 163 OF	

EH-S-01

FILE PATH: F:\SE\PROJECTS\2023 Projects\23154.2-Pape-Dawson-Amir Shokouhi-COH LS Rehab For 6 Lift Stations Pkg 2-Phase II Design\CADD FILES\23154.2 CADD\Elmwood Hills LS\CAD 23154.2\23154.2_ELMWOOD TOP SLAB.dwg

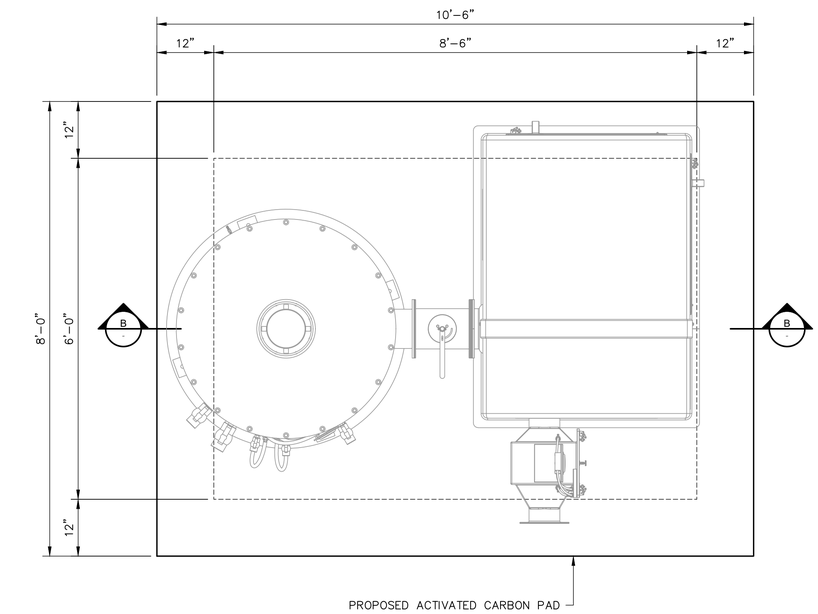

PLAN VIEW

SCALE: 3/4" = 1'-0"

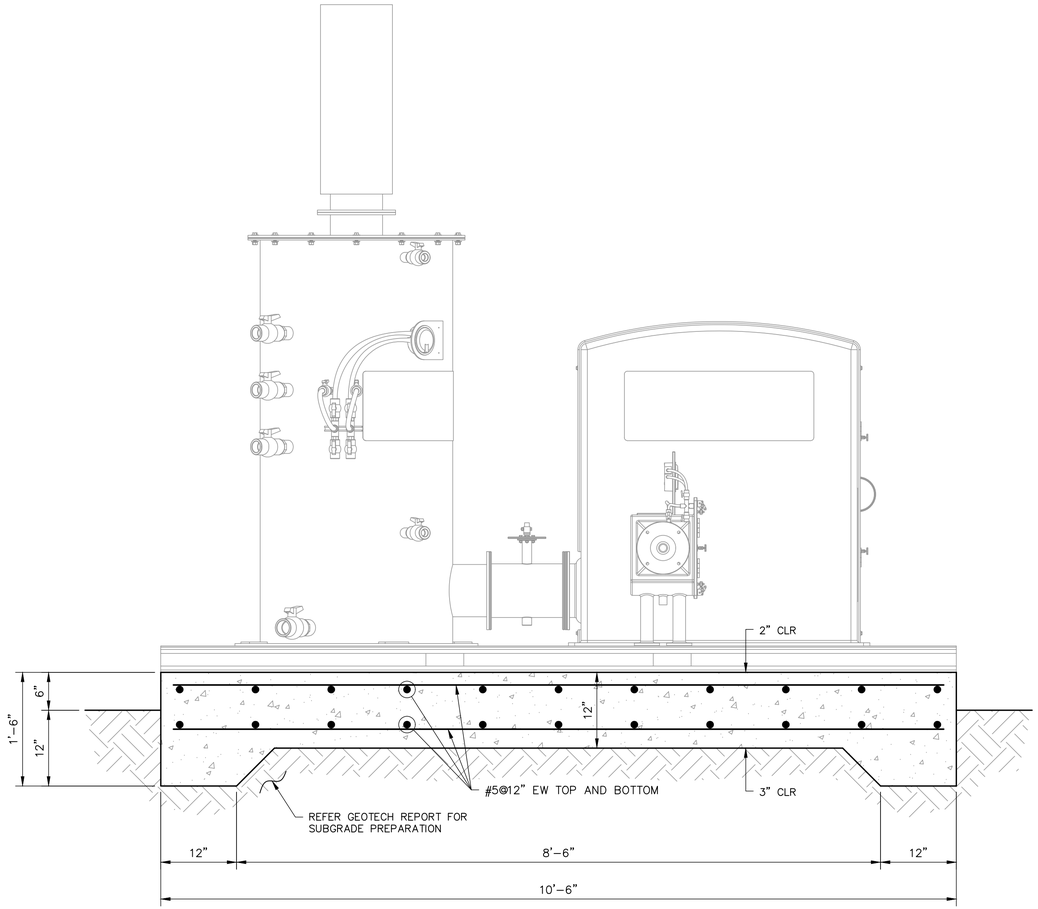

EH SECTION B

SCALE: 1" = 1'-0"

*PAD THICKNESS SUBJECT TO CHANGE, PENDING ANCHORAGE VERIFICATION.

STIVER ENGINEERING
1305 Peden Street
Houston, Texas 77006
P (713) 526-3478
stivereng.com
TX Registration No. F-190

PAPE-DAWSON
2107 CITYWEST BLVD, 3RD FLR I HOUSTON, TX 77042 I
7 1 3 4 2 8 2 4 0 0
TEXAS ENGINEERING FIRM #470 I TEXAS SURVEYING FIRM #10028800

SURVEYED BY:
PAPE-DAWSON ENGINEERS
FB NO. 24-018

FOR INTERIM
THIS DOCUMENT IS RELEASED FOR THE PURPOSE OF INTERIM REVIEW UNDER THE AUTHORITY OF JOHN M. STIVER 105179 10/16/25
THIS DOCUMENT IS NOT INTENDED FOR BIDDING, PERMITTING AND/OR CONSTRUCTION PURPOSES
REVIEW ONLY

CITY OF HOUSTON

HOUSTON PUBLIC WORKS

LIFT STATION REHABILITATION AND RECONSTRUCTION
BEN'S BRANCH, WOODLAND RIDGE, ELMWOOD HILLS, FOREST SHORES, TRAIL RIVER, RIVERLAWN
STRUCTURAL

ELMWOOD HILLS ODOR CONTROL PAD PLAN VIEW AND SECTION B

WBS NUMBER	FOR CITY OF HOUSTON USE ONLY
R-000267-0180-3	
DRAWING SCALE	
CITY OF HOUSTON PM	
BRENDA JOHNSON P.E.	
SHEET NO. 164 OF	

EH-S-02

FILE PATH: F:\SE\PROJECTS\2023 Projects\23154.2-Pape-Dawson-Amir Shokouhi-COH LS Rehab For 6 Lift Stations Pkg 2-Phase II Design\CADD FILES\23154.2 CADD\Elmwood Hills LS\CAD 23154.2\23154.2_ELMWOOD TOP SLAB.dwg

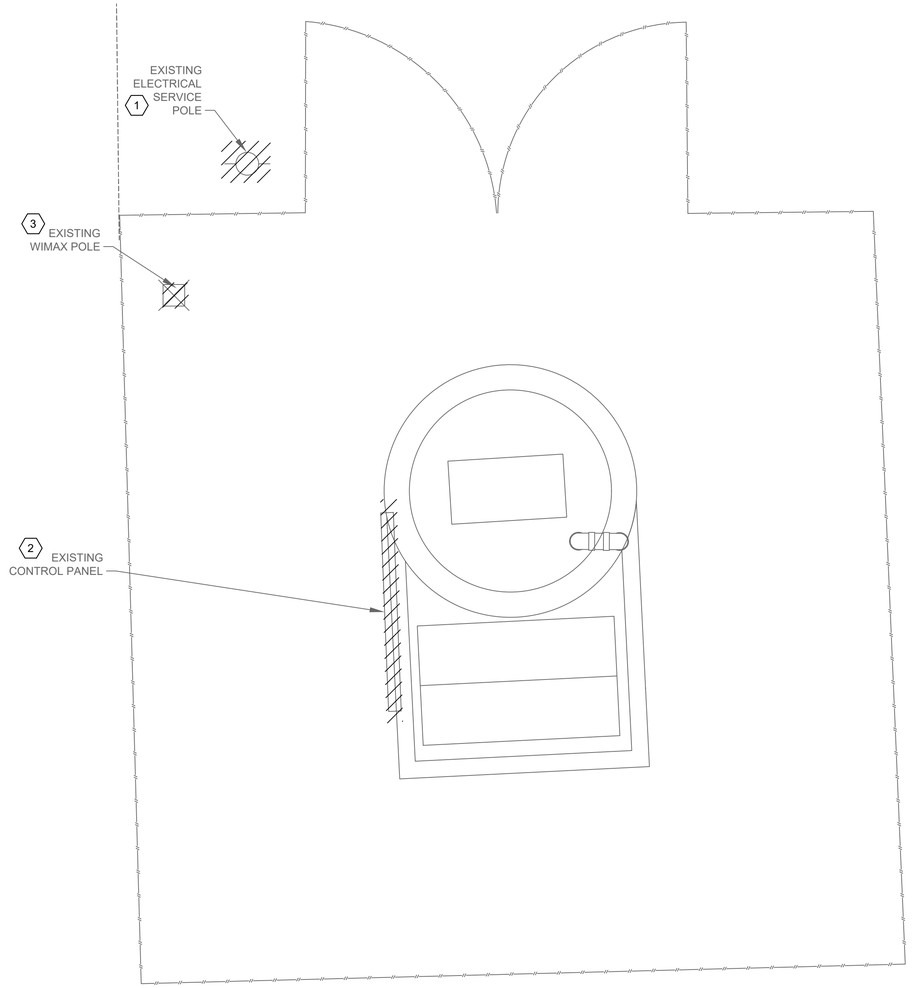

ELMWOOD HILLS ELECTRICAL
DEMOLITION SITE

PLAN

1"= 3'-0"

NOTES BY SYMBOL "#":

1. EXISTING ELECTRIC SERVICE POLE, SERVICE DISCONNECT, AND METER TO BE DEMOLISHED AND REMOVED.
2. EXISTING CONTROL PANEL, ASSOCIATED CONDUITS AND WIRES TO BE DEMOLISHED AND REMOVED.
3. EXISTING WIMAX POLE FIXTURES, CONDUITS AND WIRES TO BE DEMOLISHED AND REMOVED.

EXISTING SERVICE POLE
AND WIMAX

PHOTOGRAPH A
NTS
--
1 3

EXISTING SERVICE DISCONNECT
SWITCH AND METER

PHOTOGRAPH B
NTS
--
1

EXISTING WIMAX
POLE

PHOTOGRAPH C
NTS
--
3

NO.	DATE	REVISION	APP.

SCALE: 1"= 3'

0' 3' 6' 9'

NOTICE:
FOR YOUR SAFETY, YOU ARE REQUIRED BY TEXAS LAW TO CALL 811 AT LEAST 48 HOURS BEFORE YOU DIG SO THAT UNDERGROUND LINES CAN BE MARKED. THIS SIGNATURE DOES NOT FULFILL YOUR OBLIGATION TO CALL 811

VERIFICATION OF PRIVATE UTILITY LINES

Date

CenterPoint Energy natural gas utilities shown. (Gas service lines are not shown). This signature not be used for conflict verification.

Signature valid for six months.

Date

CenterPoint Energy/UNDERGROUND Electrical Facilities Verification ONLY. (This signature verifies existing underground facilities – not to be used for conflict verification)

Signature valid for six months.

Date

Approved for AT&T underground conduit facilities only.
Signature valid for one year.

PAPE–DAWSON
2107 CITYWEST BLVD, 3RD FLR I HOUSTON, TX 77042 I 713.428.2400
TEXAS ENGINEERING FIRM #470 I TEXAS SURVEYING FIRM #10028800

GAI
Gupta & Associates, Inc.
CONSULTING ENGINEERING
Registration No. F-2593
302 Dennis St.
Houston, Texas 77006
Tel: 713-636-2936
Fax: 713-636-2987
email: hforouzan@gaiconsulting.com

SURVEYED BY:
PAPE–DAWSON ENGINEERS
FB NO. 24–018

THIS DOCUMENT IS RELEASED FOR INTERIM REVIEW UNDER THE AUTHORIZATION OF HOSS FOROUZAN, P.E. (#77746) AND IS **NOT TO BE USED FOR CONSTRUCTION.**

CITY OF HOUSTON
HOUSTON PUBLIC WORKS

LIFT STATION REHABILITATION AND RECONSTRUCTION
BEN'S BRANCH, WOODLAND RIDGE, ELMWOOD HILLS, FOREST SHORES, TRAIL RIVER, RIVERLAWN

ELECTRICAL

ELMWOOD HILLS LIFT STATION ELECTRICAL EXISTING SITE PLAN

WBS NUMBER	FOR CITY OF HOUSTON USE ONLY
R–000267–0180–3	
DRAWING SCALE	
AS NOTED	
CITY OF HOUSTON PM	
BRENDA JOHNSON P.E.	
SHEET NO. XX OF XX	

EH–E–01

FILE PATH: O:\H8107_Lift Station Rehabilitation And Reconstruction (Pape Dawson)\6 Drawings\Electrical\Working\Elmwood Hills\H8107_EH–E–01.dwg

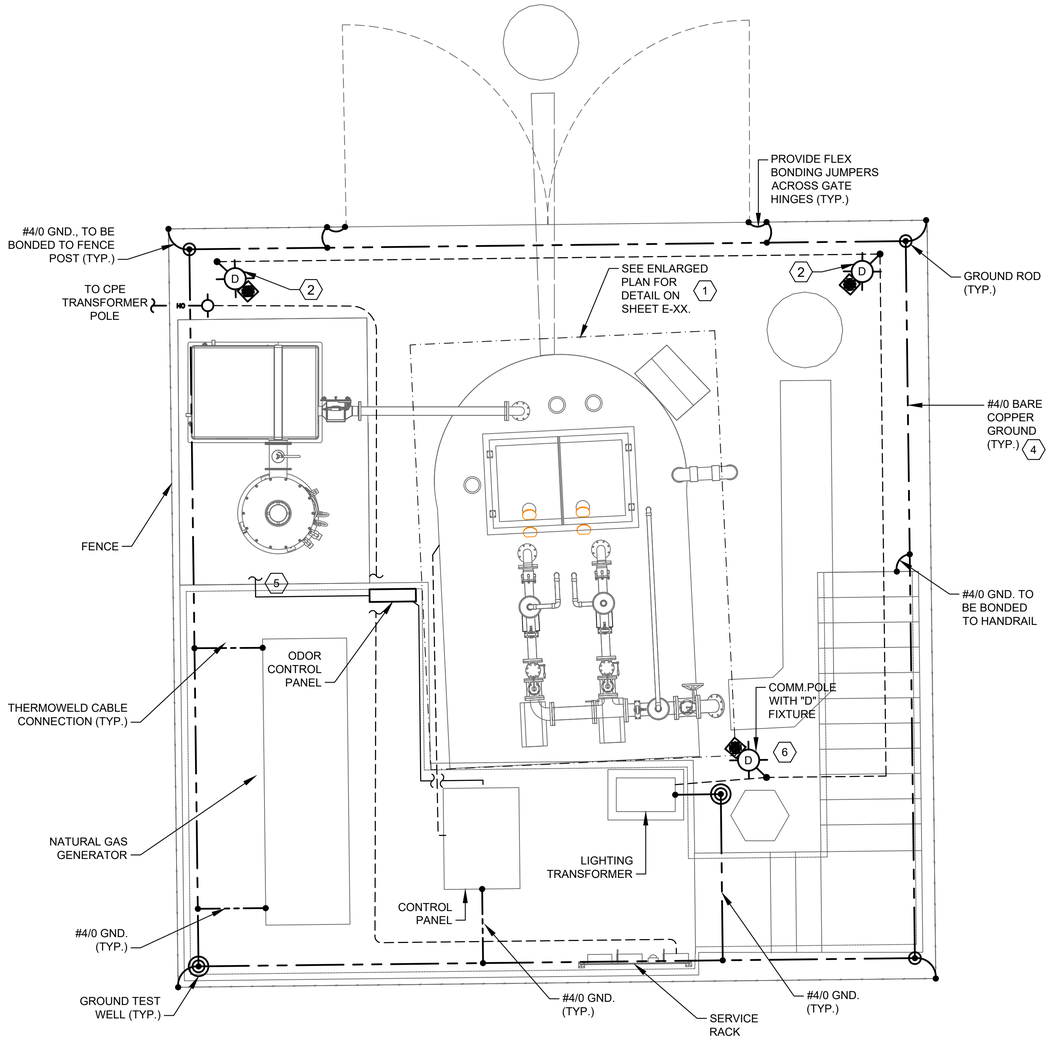

ELMWOOD HILLS ELECTRICAL
PROPOSED SITE

PLAN

1"= 3'-0"

NOTES BY SYMBOL "⟨#⟩":

1. THE ELECTRICAL INSTALLATION IN THE WET WELL SHALL BE EXPLOSION PROOF, IN ACCORDANCE WITH THE NATIONAL ELECTRICAL CODE FOR CLASS I, DIVISION 1 LOCATIONS.
2. YARD LIGHT CONTROLLED BY LIGHTING SWITCH.
3. INSIDE WETWELL RATED NEMA CLASS 1, DIV. 1. OUTSIDE ABOVE GROUND, AROUND WETWELL RATED CLASS 1, DIV. 2 ACCORDING TO NFPA 820.
4. GROUNDING LOOP SHALL BE BURIED 30" BELOW FINISHED GRADE.
5. CONTRACTOR TO MAKE THE FINAL CONNECTION TO ODOR CONTROL BLOWER.
6. TYPE "B" FIXTURE TO BE INSTALLED ON THE POLE PROVIDING WIRES FOR THE "B" LIGHT.

SCALE: 1"= 3'

0' 3' 6' 9'

NO.	DATE	REVISION	APP.

NOTICE:
FOR YOUR SAFETY, YOU ARE REQUIRED BY TEXAS LAW TO CALL 811 AT LEAST 48 HOURS BEFORE YOU DIG SO THAT UNDERGROUND LINES CAN BE MARKED. THIS SIGNATURE DOES NOT FULFILL YOUR OBLIGATION TO CALL 811

VERIFICATION OF PRIVATE UTILITY LINES

Date

CenterPoint Energy natural gas utilities shown. (Gas service lines are not shown). This signature not be used for conflict verification.

Signature valid for six months.

Date

CenterPoint Energy/UNDERGROUND Electrical Facilities Verification ONLY. (This signature verifies existing underground facilities – not to be used for conflict verification)

Signature valid for six months.

Date

Approved for AT&T underground conduit facilities only.
Signature valid for one year.

PAPE–DAWSON
2107 CITYWEST BLVD, 3RD FLR I HOUSTON, TX 77042 I 713.428.2400
TEXAS ENGINEERING FIRM #470 I TEXAS SURVEYING FIRM #10028800

GAI
Gupta & Associates, Inc.
CONSULTING ENGINEERING
Registration No. F-2593
302 Dennis St.
Houston, Texas 77006
Tel: 713-636-2936
Fax: 713-636-2987
email: hforouzan@gaiconsulting.com

THIS DOCUMENT IS RELEASED FOR INTERIM REVIEW UNDER THE AUTHORIZATION OF HOSS FOROUZAN, P.E. (#77748) AND IS **NOT TO BE USED FOR CONSTRUCTION.**

SURVEYED BY:
PAPE–DAWSON ENGINEERS
FB NO. 24–018

CITY OF HOUSTON
HOUSTON PUBLIC WORKS

LIFT STATION REHABILITATION AND RECONSTRUCTION
BEN'S BRANCH, WOODLAND RIDGE, ELMWOOD HILLS, FOREST SHORES, TRAIL RIVER, RIVERLAWN

ELECTRICAL

ELMWOOD HILLS LIFT STATION ELECTRICAL PROPOSED SITE PLAN

WBS NUMBER	FOR CITY OF HOUSTON USE ONLY
R–000267–0180–3	
DRAWING SCALE	
AS NOTED	
CITY OF HOUSTON PM	
BRENDA JOHNSON P.E.	
SHEET NO. XX OF XX	

EH–E–02

FILE PATH: O:\H8107_Lift Station Rehabilitation And Reconstruction (Pape Dawson)\6 Drawings\Electrical\Working\Elmwood Hills\H8107_EH–E–02.dwg

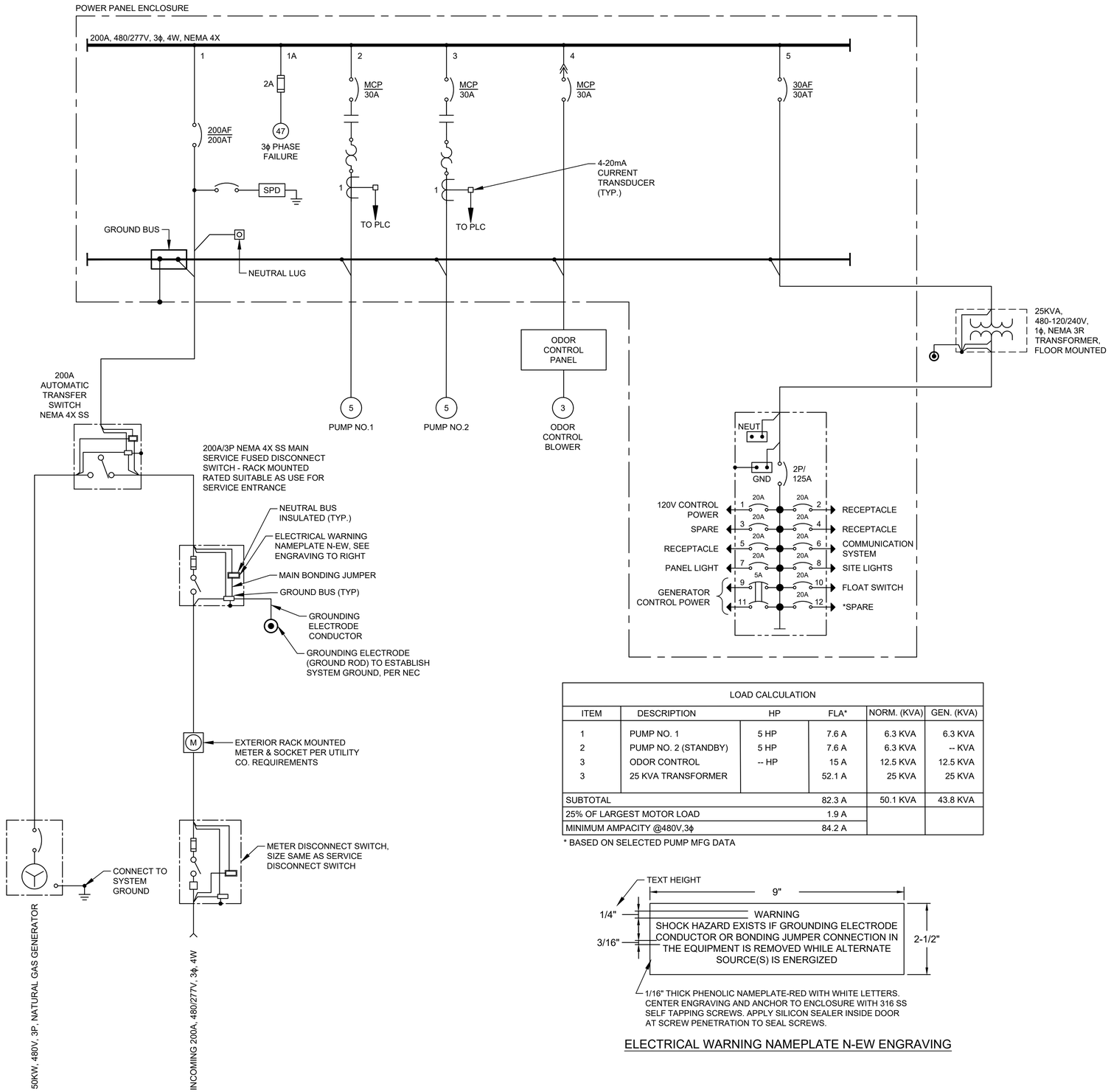

LOAD CALCULATION					
ITEM	DESCRIPTION	HP	FLA*	NORM. (KVA)	GEN. (KVA)
1	PUMP NO. 1	5 HP	7.6 A	6.3 KVA	6.3 KVA
2	PUMP NO. 2 (STANDBY)	5 HP	7.6 A	6.3 KVA	-- KVA
3	ODOR CONTROL	-- HP	15 A	12.5 KVA	12.5 KVA
3	25 KVA TRANSFORMER		52.1 A	25 KVA	25 KVA
SUBTOTAL			82.3 A	50.1 KVA	43.8 KVA
25% OF LARGEST MOTOR LOAD			1.9 A		
MINIMUM AMPACITY @480V,3ϕ			84.2 A		

* BASED ON SELECTED PUMP MFG DATA

1/16" THICK PHENOLIC NAMEPLATE-RED WITH WHITE LETTERS. CENTER ENGRAVING AND ANCHOR TO ENCLOSURE WITH 316 SS SELF TAPPING SCREWS. APPLY SILICON SEALER INSIDE DOOR AT SCREW PENETRATION TO SEAL SCREWS.

ELECTRICAL WARNING NAMEPLATE N-EW ENGRAVING

NO.	DATE	REVISION	APP.

NOTICE:
FOR YOUR SAFETY, YOU ARE REQUIRED BY TEXAS LAW TO CALL 811 AT LEAST 48 HOURS BEFORE YOU DIG SO THAT UNDERGROUND LINES CAN BE MARKED. THIS SIGNATURE DOES NOT FULFILL YOUR OBLIGATION TO CALL 811

VERIFICATION OF PRIVATE UTILITY LINES

Date

CenterPoint Energy natural gas utilities shown. (Gas service lines are not shown). This signature not be used for conflict verification.

Signature valid for six months.

Date

CenterPoint Energy/UNDERGROUND Electrical Facilities Verification ONLY. (This signature verifies existing underground facilities – not to be used for conflict verification)

Signature valid for six months.

Date

Approved for AT&T underground conduit facilities only.
Signature valid for one year.

PAPE–DAWSON
2107 CITYWEST BLVD, 3RD FLR I HOUSTON, TX 77042 I 713.428.2400
TEXAS ENGINEERING FIRM #470 I TEXAS SURVEYING FIRM #10028800

GAI
Gupta & Associates, Inc.
CONSULTING ENGINEERING
Registration No. F-2593
302 Dennis St.
Houston, Texas 77006
Tel: 713-636-2936
Fax: 713-636-2987
email: hforouzan@gaiconsulting.com

THIS DOCUMENT IS RELEASED FOR INTERIM REVIEW UNDER THE AUTHORIZATION OF HOSS FOROUZAN, P.E. (#77748) AND IS **NOT TO BE USED FOR CONSTRUCTION.**

SURVEYED BY:
PAPE–DAWSON ENGINEERS
FB NO. 24–018

CITY OF HOUSTON
HOUSTON PUBLIC WORKS

LIFT STATION REHABILITATION AND RECONSTRUCTION
BEN'S BRANCH, WOODLAND RIDGE, ELMWOOD HILLS, FOREST SHORES, TRAIL RIVER, RIVERLAWN

ELECTRICAL

ELMWOOD HILLS LIFT STATION ELECTRICAL ONE–LINE DIAGRAM

WBS NUMBER	FOR CITY OF HOUSTON USE ONLY
R–000267–0180–3	
DRAWING SCALE	
AS NOTED	
CITY OF HOUSTON PM	
BRENDA JOHNSON P.E.	
SHEET NO. XX OF XX	

EH–E–03

FILE PATH: O:\H8107_Lift Station Rehabilitation And Reconstruction (Pape Dawson)\6 Drawings\Electrical\Working\Elmwood Hills\H8107_EH–E–03.dwg

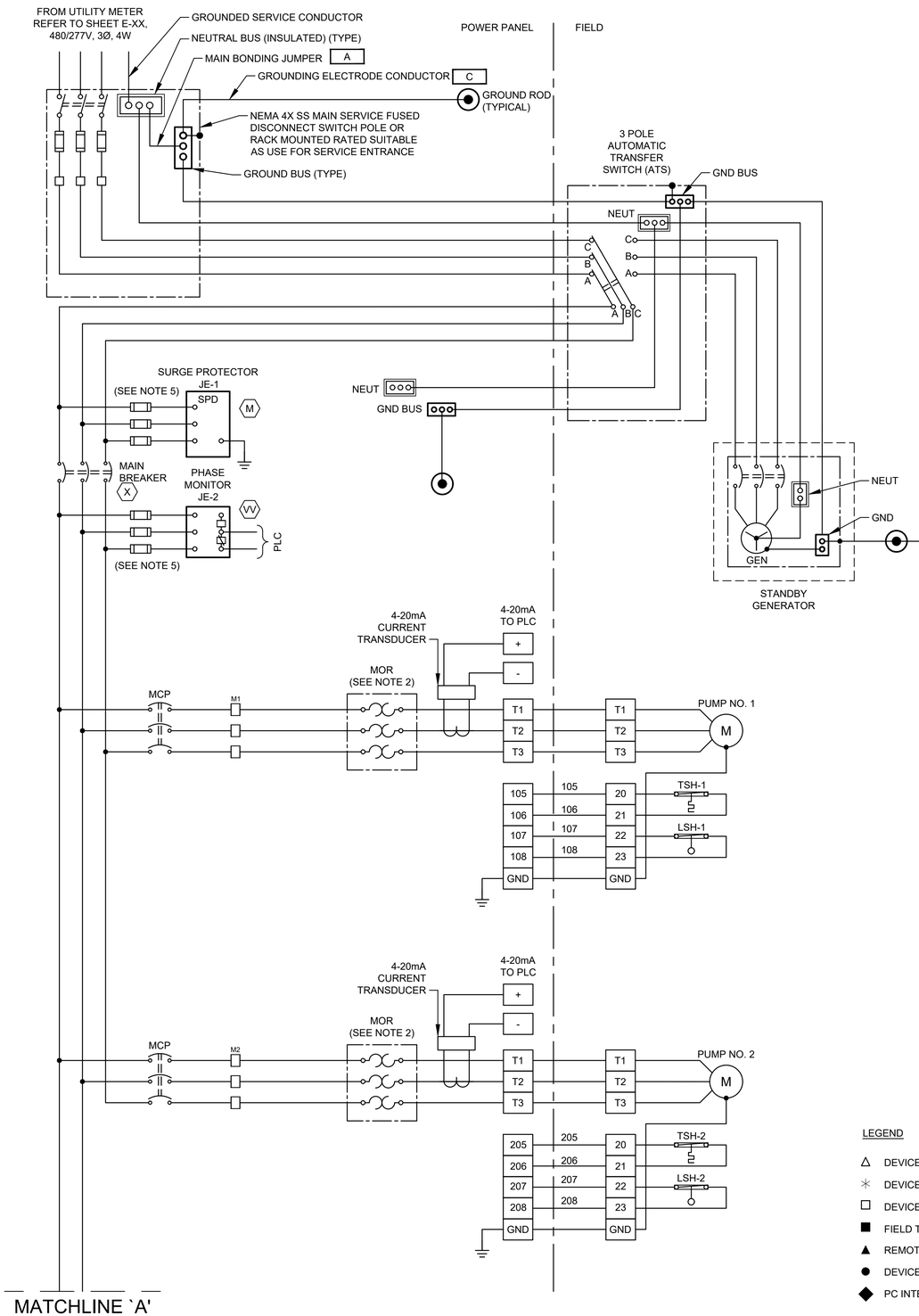

NOTES:

1. UNLESS OTHERWISE INDICATE, ALL DEVICES WITHOUT FURTHER DESIGNATION ARE LOCATED AT THE CONTROL PANEL.
2. THE COMBINATION OF CT AND MOTOR OVERLOAD RELAY IF REQUIRED.
3. CONTRACTOR TO REVISE DWG. BASED ON MANUFACTURE AND SIZE.
4. CONTRACTOR SHALL TERMINATE POWER & CONTROL WIRES PER MANUFACTURER'S REQUIREMENTS.
5. PROVIDE FUSE SIZE ACCORDING TO MANUFACTURER'S REQUIREMENTS.

LEGEND

- △ DEVICE OR FIELD TERMINAL LOCATED AT MOTOR
- ✳ DEVICE OR FIELD TERMINAL LOCATED REMOTE
- □ DEVICE OR FIELD TERMINAL LOCATED AT POWER PANEL
- ■ FIELD TERMINAL LOCATED AT CONTROL PANEL
- ▲ REMOTE TERMINAL
- ● DEVICE TERMINAL NO.
- ◆ PC INTERFACE TERMINAL

NO.	DATE	REVISION	APP.

NOTICE:
FOR YOUR SAFETY, YOU ARE REQUIRED BY TEXAS LAW TO CALL 811 AT LEAST 48 HOURS BEFORE YOU DIG SO THAT UNDERGROUND LINES CAN BE MARKED. THIS SIGNATURE DOES NOT FULFILL YOUR OBLIGATION TO CALL 811

VERIFICATION OF PRIVATE UTILITY LINES

Date

CenterPoint Energy natural gas utilities shown. (Gas service lines are not shown). This signature not be used for conflict verification.

Signature valid for six months.

Date

CenterPoint Energy/UNDERGROUND Electrical Facilities Verification ONLY. (This signature verifies existing underground facilities – not to be used for conflict verification)

Signature valid for six months.

Date

Approved for AT&T underground conduit facilities only.
Signature valid for one year.

PAPE–DAWSON
2107 CITYWEST BLVD, 3RD FLR I HOUSTON, TX 77042 I 713.428.2400
TEXAS ENGINEERING FIRM #470 I TEXAS SURVEYING FIRM #10028800

GAI
Gupta & Associates, Inc.
CONSULTING ENGINEERING
Registration No. F-2593
302 Dennis St.
Houston, Texas 77006
Tel: 713-636-2936
Fax: 713-636-2987
email: hforouzan@gaiconsulting.com

SURVEYED BY:
PAPE–DAWSON ENGINEERS
FB NO. 24–018

THIS DOCUMENT IS RELEASED FOR INTERIM REVIEW UNDER THE AUTHORIZATION OF HOSS FOROUZAN, P.E. (#77748) AND IS **NOT TO BE USED FOR CONSTRUCTION.**

CITY OF HOUSTON
HOUSTON PUBLIC WORKS

LIFT STATION REHABILITATION AND RECONSTRUCTION
BEN'S BRANCH, WOODLAND RIDGE, ELMWOOD HILLS, FOREST SHORES, TRAIL RIVER, RIVERLAWN

ELECTRICAL

ELMWOOD HILLS LIFT STATION ELECTRICAL THREE LINE DIAGRAM

WBS NUMBER	FOR CITY OF HOUSTON USE ONLY
R–000267–0180–3	
DRAWING SCALE	
AS NOTED	
CITY OF HOUSTON PM	
BRENDA JOHNSON P.E.	
SHEET NO. XX OF XX	

EH–E–04

FILE PATH: O:\H8107_Lift Station Rehabilitation And Reconstruction (Pape Dawson)\6 Drawings\Electrical\Working\Elmwood Hills\H8107_EH–E–04.dwg

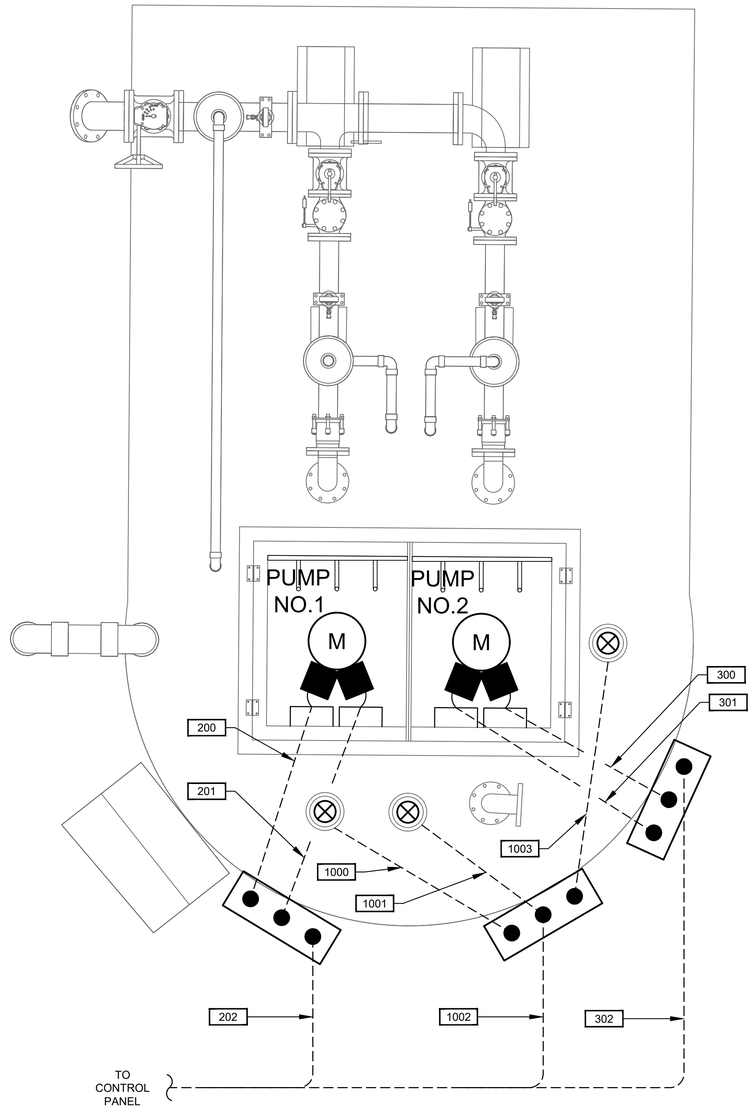

ELMWOOD HILLS LIFT STATION
ENLARGED PLAN

PLAN

3/4"=1'-0"

NO.	DATE	REVISION	APP.

6' 0 1 2

SCALE: 3/4" = 1'-0"

NOTICE:
FOR YOUR SAFETY, YOU ARE REQUIRED BY TEXAS LAW TO CALL 811 AT LEAST 48 HOURS BEFORE YOU DIG SO THAT UNDERGROUND LINES CAN BE MARKED. THIS SIGNATURE DOES NOT FULFILL YOUR OBLIGATION TO CALL 811

VERIFICATION OF PRIVATE UTILITY LINES

Date

CenterPoint Energy natural gas utilities shown. (Gas service lines are not shown). This signature not be used for conflict verification.

Signature valid for six months.

Date

CenterPoint Energy/UNDERGROUND Electrical Facilities Verification ONLY. (This signature verifies existing underground facilities – not to be used for conflict verification)

Signature valid for six months.

Date

Approved for AT&T underground conduit facilities only.
Signature valid for one year.

PAPE–DAWSON
2107 CITYWEST BLVD, 3RD FLR I HOUSTON, TX 77042 I 713.428.2400
TEXAS ENGINEERING FIRM #470 I TEXAS SURVEYING FIRM #10028800

GAI
Gupta & Associates, Inc.
CONSULTING ENGINEERING
Registration No. F-2593
302 Dennis St.
Houston, Texas 77006
Tel: 713-636-2936
Fax: 713-636-2987
email: hforouzan@gaiconsulting.com

SURVEYED BY:
PAPE–DAWSON ENGINEERS
FB NO. 24–018

THIS DOCUMENT IS RELEASED FOR INTERIM REVIEW UNDER THE AUTHORIZATION OF HOSS FOROUZAN, P.E. (#77748) AND IS **NOT TO BE USED FOR CONSTRUCTION.**

CITY OF HOUSTON
HOUSTON PUBLIC WORKS

LIFT STATION REHABILITATION AND RECONSTRUCTION
BEN'S BRANCH, WOODLAND RIDGE, ELMWOOD HILLS, FOREST SHORES, TRAIL RIVER, RIVERLAWN

ELECTRICAL

ELMWOOD HILLS LIFT STATION ELECTRICAL ENLARGED LIFT STATION PLAN

WBS NUMBER	FOR CITY OF HOUSTON USE ONLY
R–000267–0180–3	
DRAWING SCALE	
AS NOTED	
CITY OF HOUSTON PM	
BRENDA JOHNSON P.E.	
SHEET NO. XX OF XX	

EH–E–05

FILE PATH: O:\H8107_Lift Station Rehabilitation And Reconstruction (Pape Dawson)\6 Drawings\Electrical\Working\Elmwood Hills\H8107_EH–E–05.dwg

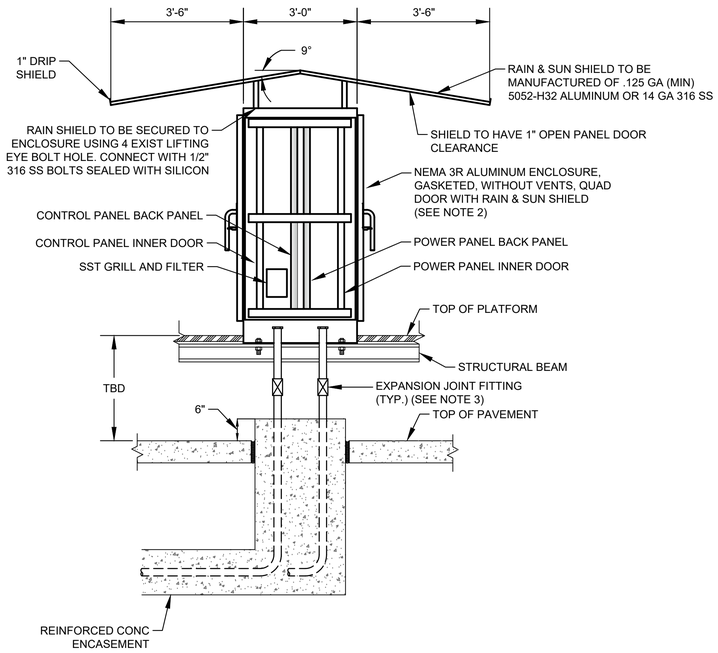

CONTROL CABINET ENCLOSURE WITH PLATFORM

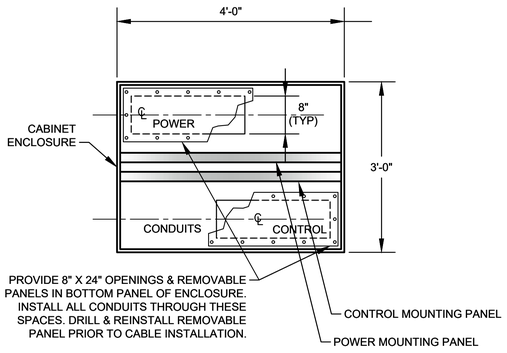

SECTION 2 / NTS

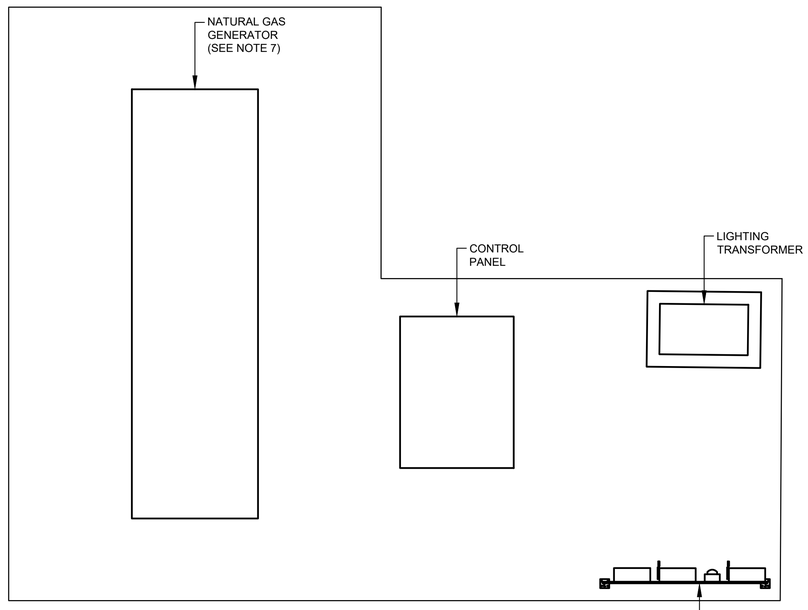

GENERATOR ON ELEVATED PLATFORM DETAIL

DETAIL 3 / 1/2" = 1'-0"

NOTES:

1. SEE SHEET EH-I-04 FOR EQUIPMENT SCHEDULE.
2. REFER TO SPEC 13325-8 FOR PANEL DIMENSIONS.
3. EXPANSION JOINT FITTINGS AS REQUIRED.
4. REFER TO SERVICE RACK FOR DETAIL.
5. REFER TO STRUCTURAL DRAWINGS .
6. CONDUIT TO BE MOUNTED BELOW PLATFORM GRATING.
7. GENERATOR IS FOR EMERGENCY USE ONLY.

NO.	DATE	REVISION	APP.

NOTICE:
FOR YOUR SAFETY, YOU ARE REQUIRED BY TEXAS LAW TO CALL 811 AT LEAST 48 HOURS BEFORE YOU DIG SO THAT UNDERGROUND LINES CAN BE MARKED. THIS SIGNATURE DOES NOT FULFILL YOUR OBLIGATION TO CALL 811

VERIFICATION OF PRIVATE UTILITY LINES

Date

CenterPoint Energy natural gas utilities shown. (Gas service lines are not shown). This signature not be used for conflict verification.

Signature valid for six months.

Date

CenterPoint Energy/UNDERGROUND Electrical Facilities Verification ONLY. (This signature verifies existing underground facilities – not to be used for conflict verification)

Signature valid for six months.

Date

Approved for AT&T underground conduit facilities only.
Signature valid for one year.

PAPE-DAWSON
2107 CITYWEST BLVD, 3RD FLR I HOUSTON, TX 77042 I 713.428.2400
TEXAS ENGINEERING FIRM #470 I TEXAS SURVEYING FIRM #10028800

GAI
Gupta & Associates, Inc.
CONSULTING ENGINEERING
Registration No. F-2593
302 Dennis St.
Houston, Texas 77006
Tel: 713-636-2936
Fax: 713-636-2987
email: hforouzan@gaiconsulting.com

SURVEYED BY:
PAPE-DAWSON ENGINEERS
FB NO. 24-018

THIS DOCUMENT IS RELEASED FOR INTERIM REVIEW UNDER THE AUTHORIZATION OF HOSS FOROUZAN, P.E. (#77748) AND IS **NOT TO BE USED FOR CONSTRUCTION.**

CITY OF HOUSTON
HOUSTON PUBLIC WORKS

LIFT STATION REHABILITATION AND RECONSTRUCTION
BEN'S BRANCH, WOODLAND RIDGE, ELMWOOD HILLS, FOREST SHORES, TRAIL RIVER, RIVERLAWN

ELECTRICAL

ELMWOOD HILLS LIFT STATION CONTROL CABINET ENCLOSURE DETAIL

WBS NUMBER	FOR CITY OF HOUSTON USE ONLY
R-000267-0180-3	
DRAWING SCALE	
AS NOTED	
CITY OF HOUSTON PM	
BRENDA JOHNSON P.E.	
SHEET NO. XX OF XX	

EH-E-06

FILE PATH: O:\H8107_Lift Station Rehabilitation And Reconstruction (Pape Dawson)\6 Drawings\Electrical\Working\Elmwood Hills\H8107_EH-E-06.dwg

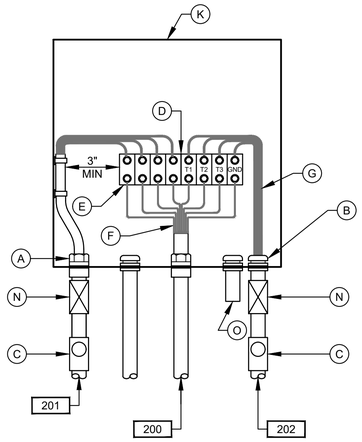

PUMP NO.1
JUNCTION BOX

DETAIL 3
NTS
(SEE NOTE 7)

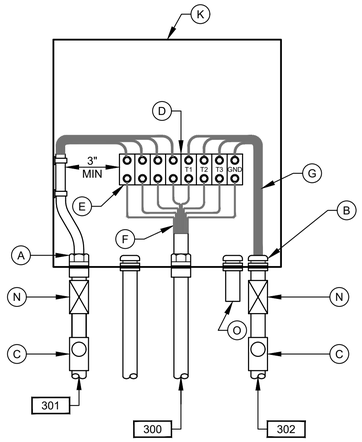

PUMP NO.2
JUNCTION BOX

DETAIL 4
NTS
(SEE NOTE 7)

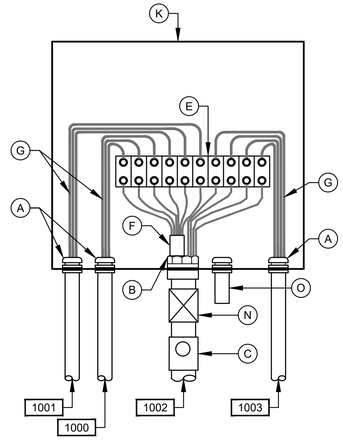

LEVEL TRANSMITTER
JUNCTION BOX

DETAIL 5
NTS
(SEE NOTE 7)

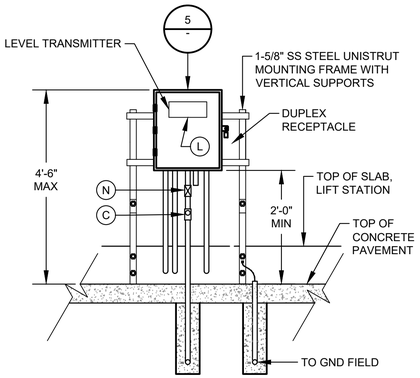

DETAIL 6
NTS
(SEE NOTE 9 & 12)

NOTES:

1. NAMEPLATES SHALL BE MOUNTED TO JUNCTION BOXES USING 316 STAINLESS STEEL HARDWARE.
2. MAINTAIN MINIMUM SEPARATION REQUIRED UNDER NEC ARTICLE 504, BETWEEN INTRINSICALLY SAFE CONTROL WIRING AND NON INTRINSICALLY SAFE MOTOR FEEDER WIRING.
3. UNLESS OTHERWISE NOTED, ALL EXTERIOR EXPOSED CONDUITS SHALL BE PVC COATED ALUMINUM.
4. UNLESS OTHERWISE NOTED, ALL NUTS, BOLTS, SCREWS WASHERS, ETC SHALL BE TYPE 316 STAINLESS STEEL.
5. ALL UNDERGROUND CONDUITS TO BE ENCASED IN REINFORCED CONCRETE DUCTBANK.
6. PROVIDE ANTI-CORROSIVE SPRAY ON ANY BARE METAL PARTS OR EXPOSED WIRE.
7. SEE WIRING SCHEMATICS FOR TERMINALS AND WIRE NUMBERS.
8. ANY CONDUIT REQUIRING A CSBE SEAL, SHALL BE A MINIMUM SIZE OF 2 1/2" PER CABLE.
9. DETAIL SHOWN MAY BE MODIFIED PER SITE SITUATION.
10. COORDINATE WITH WASTE WATER OPERATIONS ELECTRICAL ORGANIZATION FOR THE OPENING OF JUNCTION BOXES TO THE SIDE OF WET WELL IF REQUIRED DURING CONSTRUCTION.
11. THE ENCLOSURES WITH ELECTRICAL CIRCUITS SHALL BE A MINIMUM OF 5 FEET FROM ANY CLASSIFIED AREA, OTHERWISE EXPLOSION PROOF TYPE ENCLOSURES SHALL BE USED.

NO.	DATE	REVISION	APP.

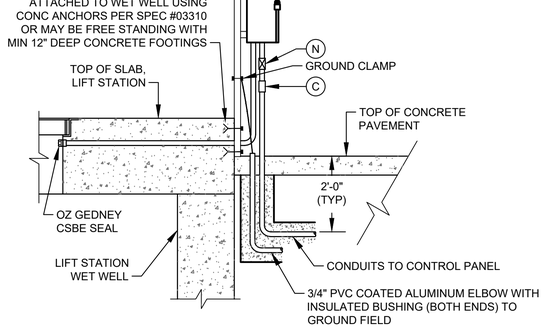

TYP SIDE VIEW FOR DETAIL 1, 2, & 6

(SEE NOTE 10)

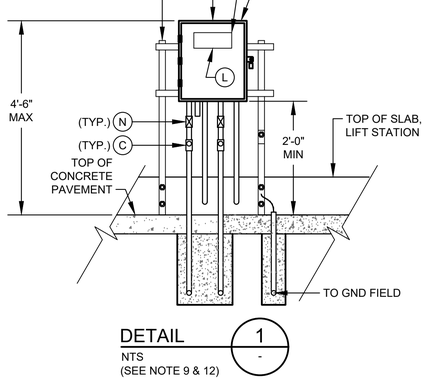

DETAIL 1
NTS
(SEE NOTE 9 & 12)

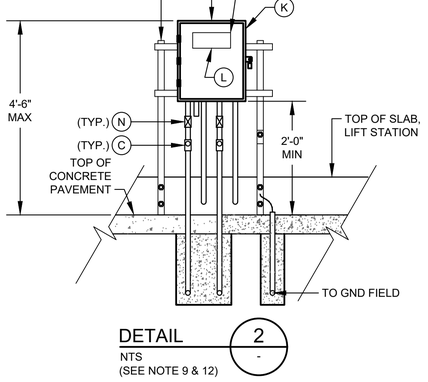

DETAIL 2
NTS
(SEE NOTE 9 & 12)

JUNCTION BOX EQUIPMENT SCHEDULE

- A - OZ GEDNEY CSBE SEAL
- B - WATERTIGHT CONDUIT HUB WITH INSULATED BUSHING
- C - CLASS I, DIV 1, EXPLOSION PROOF SEAL INSTALLED PER NEC DIV 501
- D - POWER TERMINAL BLOCK W/SCREW DOWN BOX LUGS
- E - CONTROL TERM BLOCK W/SCREW DOWN BOX LUGS
- F - MULTI-CONDUCTOR CABLE, REMOVE OUTER JACKET AS SHOWN
- G - WIRING AS SCHEDULED
- H - NOT USED.
- I - NOT USED.
- J - NOT USED
- K - NEMA 6P STAINLESS STEEL JUNCTION BOX WITH GASKETED FRONT COVER, SINGLE QUARTER TURN, OIL-TIGHT LATCH AND PADLOCKING PROVISIONS, MINIMUM SIZE: 12"W X 16"H X 6"D
- L - NAMEPLATE, SEE SPECIFICATIONES (SEE NAMEPLATE SCHEDULE)
- M - NOT USED.
- N - EXPANSION FITTING
- O - DRAIN VENT

NOTICE:
FOR YOUR SAFETY, YOU ARE REQUIRED BY TEXAS LAW TO CALL 811 AT LEAST 48 HOURS BEFORE YOU DIG SO THAT UNDERGROUND LINES CAN BE MARKED. THIS SIGNATURE DOES NOT FULFILL YOUR OBLIGATION TO CALL 811

VERIFICATION OF PRIVATE UTILITY LINES

Date

CenterPoint Energy natural gas utilities shown. (Gas service lines are not shown). This signature not be used for conflict verification.

Signature valid for six months.

Date

CenterPoint Energy/UNDERGROUND Electrical Facilities Verification ONLY. (This signature verifies existing underground facilities – not to be used for conflict verification)

Signature valid for six months.

Date

Approved for AT&T underground conduit facilities only.
Signature valid for one year.

PAPE–DAWSON
2107 CITYWEST BLVD, 3RD FLR I HOUSTON, TX 77042 I 713.428.2400
TEXAS ENGINEERING FIRM #470 I TEXAS SURVEYING FIRM #10028800

GAI
Gupta & Associates, Inc.
CONSULTING ENGINEERING
Registration No. F-2593
302 Dennis St.
Houston, Texas 77006
Tel: 713-636-2936
Fax: 713-636-2987
email: hforouzan@gaiconsulting.com

SURVEYED BY:
PAPE–DAWSON ENGINEERS
FB NO. 24–018

THIS DOCUMENT IS RELEASED FOR INTERIM REVIEW UNDER THE AUTHORIZATION OF HOSS FOROUZAN, P.E. (#77748) AND IS **NOT TO BE USED FOR CONSTRUCTION.**

CITY OF HOUSTON
HOUSTON PUBLIC WORKS

LIFT STATION REHABILITATION AND RECONSTRUCTION
BEN'S BRANCH, WOODLAND RIDGE, ELMWOOD HILLS, FOREST SHORES, TRAIL RIVER, RIVERLAWN

ELECTRICAL

ELMWOOD HILLS LIFT STATION TYPICAL JUNCTION BOX DETAILS

WBS NUMBER	FOR CITY OF HOUSTON USE ONLY
R–000267–0180–3	
DRAWING SCALE	
AS NOTED	
CITY OF HOUSTON PM	
BRENDA JOHNSON P.E.	
SHEET NO. XX OF XX	

EH–E–07

FILE PATH: O:\H8107_Lift Station Rehabilitation And Reconstruction (Pape Dawson)\6 Drawings\Electrical\Working\Elmwood Hills\H8107_EH–E–07.dwg

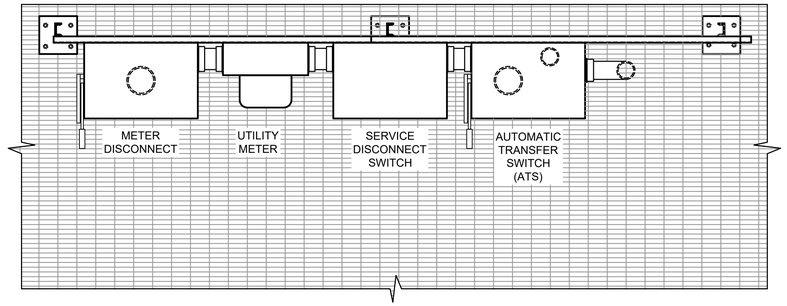

PLAN

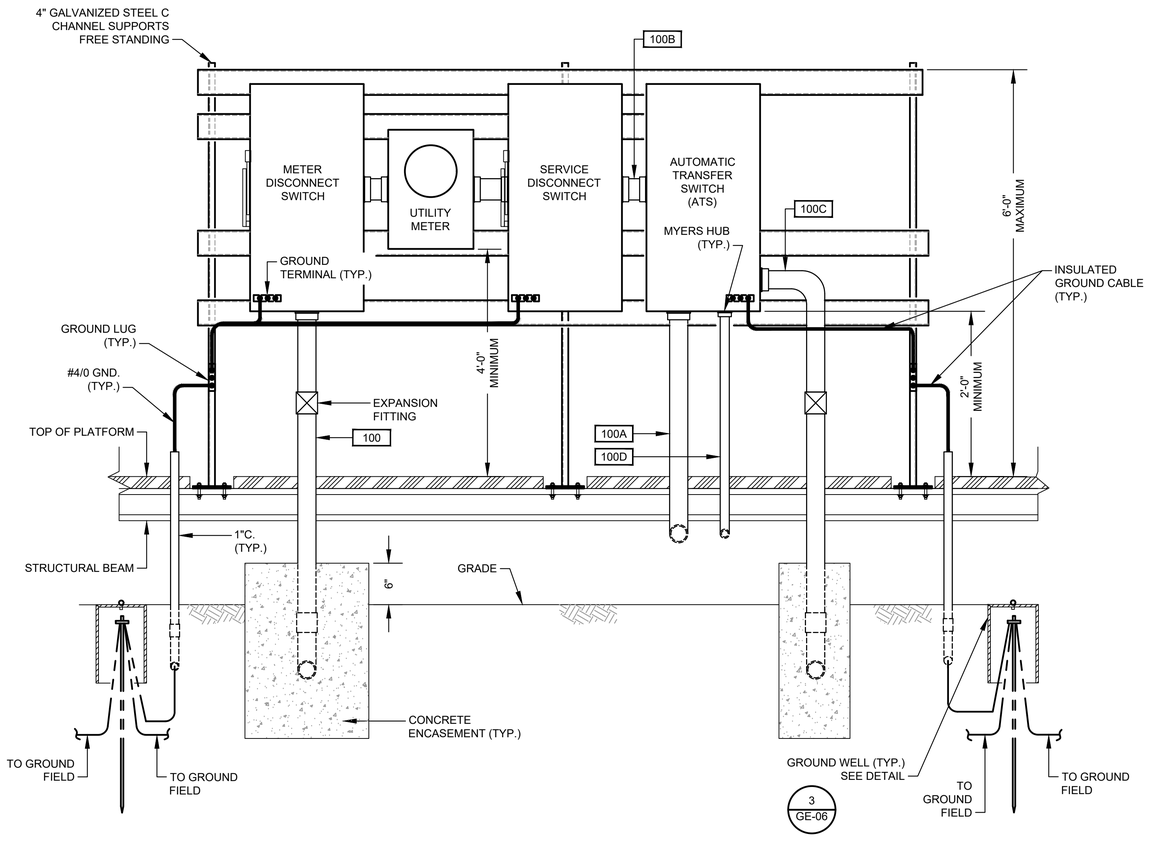

SERVICE MOUNTING RACK

DETAIL 1
NTS. -

NO.	DATE	REVISION	APP.

NOTICE:
FOR YOUR SAFETY, YOU ARE REQUIRED BY TEXAS LAW TO CALL 811 AT LEAST 48 HOURS BEFORE YOU DIG SO THAT UNDERGROUND LINES CAN BE MARKED. THIS SIGNATURE DOES NOT FULFILL YOUR OBLIGATION TO CALL 811

VERIFICATION OF PRIVATE UTILITY LINES

Date

CenterPoint Energy natural gas utilities shown. (Gas service lines are not shown). This signature not be used for conflict verification.

Signature valid for six months.

Date

CenterPoint Energy/UNDERGROUND Electrical Facilities Verification ONLY. (This signature verifies existing underground facilities – not to be used for conflict verification)

Signature valid for six months.

Date

Approved for AT&T underground conduit facilities only.
Signature valid for one year.

PAPE–DAWSON
2107 CITYWEST BLVD, 3RD FLR I HOUSTON, TX 77042 I 713.428.2400
TEXAS ENGINEERING FIRM #470 I TEXAS SURVEYING FIRM #10028800

GAI
Gupta & Associates, Inc.
CONSULTING ENGINEERING
Registration No. F-2593
302 Dennis St.
Houston, Texas 77006
Tel: 713-636-2936
Fax: 713-636-2987
email: hfarouzan@gaiconsulting.com

SURVEYED BY:
PAPE–DAWSON ENGINEERS
FB NO. 24–018

THIS DOCUMENT IS RELEASED FOR INTERIM REVIEW UNDER THE AUTHORIZATION OF HOSS FOROUZAN, P.E. (#77748) AND IS **NOT TO BE USED FOR CONSTRUCTION.**

CITY OF HOUSTON
HOUSTON PUBLIC WORKS

LIFT STATION REHABILITATION AND RECONSTRUCTION
BEN'S BRANCH, WOODLAND RIDGE, ELMWOOD HILLS, FOREST SHORES, TRAIL RIVER, RIVERLAWN

ELECTRICAL

ELMWOOD HILLS LIFT STATION ELECTRICAL SERVICE RACK DETAIL

WBS NUMBER	FOR CITY OF HOUSTON USE ONLY
R–000267–0180–3	
DRAWING SCALE	
AS NOTED	
CITY OF HOUSTON PM	
BRENDA JOHNSON P.E.	
SHEET NO. XX OF XX	

EH–E–08

FILE PATH: O:\H8107_Lift Station Rehabilitation And Reconstruction (Pape Dawson)\6 Drawings\Electrical\Working\Elmwood Hills\H8107_EH–E–08.dwg

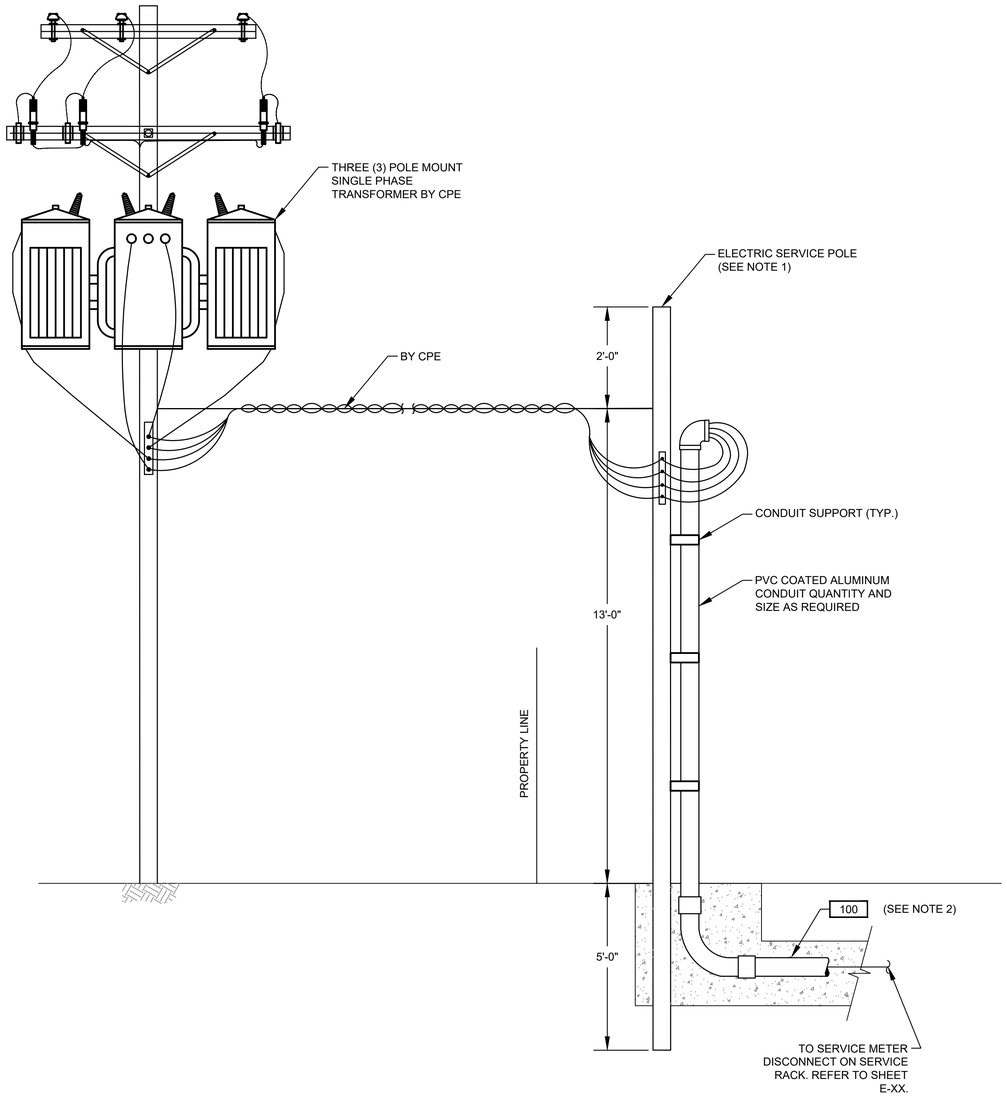

ELECTRICAL SERVICE ENTRANCE

DETAIL 1
NTS. -

NOTES:

1. WOODEN POLE 20' LONG. TOP DIAMETER 6", BOTTOM DIAMETER 8" PROVIDED AND INSTALLED BY ELECTRICAL CONTRACTOR.
2. ELECTRICAL SERVICE FEEDER PROVIDED AND INSTALLED BY ELECTRICAL CONTRACTOR. COORDINATE WITH CPE FOR THE REQUIREMENTS OF THE INSTALLATION.

NO.	DATE	REVISION	APP.

NOTICE:
FOR YOUR SAFETY, YOU ARE REQUIRED BY TEXAS LAW TO CALL 811 AT LEAST 48 HOURS BEFORE YOU DIG SO THAT UNDERGROUND LINES CAN BE MARKED. THIS SIGNATURE DOES NOT FULFILL YOUR OBLIGATION TO CALL 811

VERIFICATION OF PRIVATE UTILITY LINES

Date

CenterPoint Energy natural gas utilities shown. (Gas service lines are not shown). This signature not be used for conflict verification.

Signature valid for six months.

Date

CenterPoint Energy/UNDERGROUND Electrical Facilities Verification ONLY. (This signature verifies existing underground facilities – not to be used for conflict verification)

Signature valid for six months.

Date

Approved for AT&T underground conduit facilities only.
Signature valid for one year.

PAPE-DAWSON
2107 CITYWEST BLVD, 3RD FLR I HOUSTON, TX 77042 I 713.428.2400
TEXAS ENGINEERING FIRM #470 I TEXAS SURVEYING FIRM #10028800

GAI
Gupta & Associates, Inc.
CONSULTING ENGINEERING
Registration No. F-2593
302 Dennis St.
Houston, Texas 77006
Tel: 713-636-2936
Fax: 713-636-2987
email: hforouzan@gaiconsulting.com

SURVEYED BY:
PAPE-DAWSON ENGINEERS
FB NO. 24-018

THIS DOCUMENT IS RELEASED FOR INTERIM REVIEW UNDER THE AUTHORIZATION OF HOSS FOROUZAN, P.E. (#77748) AND IS **NOT TO BE USED FOR CONSTRUCTION.**

CITY OF HOUSTON
HOUSTON PUBLIC WORKS

LIFT STATION REHABILITATION AND RECONSTRUCTION
BEN'S BRANCH, WOODLAND RIDGE, ELMWOOD HILLS, FOREST SHORES, TRAIL RIVER, RIVERLAWN

ELECTRICAL

ELMWOOD HILLS LIFT STATION SERVICE POLE DETAIL

WBS NUMBER	FOR CITY OF HOUSTON USE ONLY
R-000267-0180-3	
DRAWING SCALE	
AS NOTED	
CITY OF HOUSTON PM	
BRENDA JOHNSON P.E.	
SHEET NO. XX OF XX	

EH-E-09

FILE PATH: O:\H8107_Lift Station Rehabilitation And Reconstruction (Pape Dawson)\6 Drawings\Electrical\Working\Elmwood Hills\H8107_EH-E-09.dwg

	DESCRIPTION	SERVICE		ROUTING			CONDUIT & WIRE SIZE
		VOLTAGE	AMPS OR HP	FROM	TO	VIA	
A	MAIN BONDING JUMPER	--	--	MAIN FUSED DISCONNECT NEUTRAL	MAIN FUSED DISCONNECT GROUND	--	#4 CU GND.
B	EQUIPMENT BONDING JUMPER	--	--	MCC/POWER PANEL ENCLOSURE	POWER/CONTROL PANEL & EQUIPMENT	--	#4 CU GND.
C	GROUNDED ELECTRODE CONDUCTOR	--	--	GROUNDING ELECTRODE	MAIN SERVICE FUSED DISCONNECT GROUNDING	--	#4 CU GND.
100	SERVICE ENTRANCE	480V	200A	UTILITY POWER SERVICE	METER DISCONNECT		3 #3/0 AWG., #4 NEUT. #3 GND., 2-1/2" C.
100A	UTILITY POWER ENTRANCE	480V	200A	SERVICE DISCONNECT SWITCH	ATS	--	3 #3/0 AWG., #4 NEUT. #3 GND., 2-1/2" C.
100B	GENERATOR POWER ENTRANCE	480V	200A	STANDBY GENERATOR	ATS	--	3 #3/0 AWG., #4 NEUT. #3 GND., 2-1/2" C.
100C	480V POWER	480V	200A	ATS	CONTROL PANEL	--	3 #3/0 AWG., #4 NEUT. #3 GND., 2-1/2" C.
100D	GENERATOR CONTROL POWER	120/240V	50A	STANDBY GENERATOR	LIGHTING PANEL	--	3#4 AWG., #8 GND., 1-1/2"C.
100E	GENERATOR CONTROLS	24VDC	--	STANDBY GENERATOR	ATS	--	6#14 AWG., #14 GND., 3/4"C.
100F	NORMAL/EMERGENCY POWER STATUS	24VDC	--	ATS	CONTROL PANEL	--	4 #14 AWG., #14 GND., 3/4"C.
100G	GENERATOR ANNUNCIATOR	24VDC	--	STANDBY GENERATOR	CONTROL PANEL	--	16#14 AWG., #14 GND., 1"C.
101	GROUND ELECTRODE CONDUCTOR	--	--	MCC ENCLOSURE	GROUND FIELD	--	#2/0 GND.
102	GROUND ELECTRODE CONDUCTOR	--	--	BUILDING STEEL	GROUND FIELD	--	#2/0 GND.
103	BUILDING GROUNDING	--	--	BUILDING REBAR	LIGHTNING GROUND ROD	--	#2/0 GND.
104	GROUND ELECTRODE CONDUCTOR	--	--	CONTROL PANEL	GROUND FIELD	--	#2/0 GND.
105	COMMUNICATION	--	--	COMMUNICATION POLE	CONTROL PANEL	--	1-1/2"C. CAT 5E
105A	COMMUNICATION POLE LIGHT	120V	--	COMMUNICATION POLE	LIGHTING PANEL	--	2#12, #12G, 1"C.
200	PUMP NO. 1 POWER	480V	10 HP	PUMP NO. 1	PUMP NO. 1 JUNCTION BOX	--	MANUFACTURER CABLE IN 2-1/2"C.
201	PUMP NO. 1 CONTROLS	120V	--	PUMP NO. 1	PUMP NO. 1 JUNCTION BOX	--	MANUFACTURER CABLE IN 2-1/2"C.
202	PUMP NO. 1 POWER	480V	10 HP	PUMP NO. 1 JUNCTION BOX	PUMP STARTER	--	3#8, #10 GND., 2"C.
203	COMBINED PUMP CONTROLS	120V	--	PUMP NO. 1 JUNCTION BOX	PUMP STARTER	COMBINE PUMP 1 & 2 CONTROLS	COMBINE 200 & 300 TAG WIRING, 8#14, 1"C.
300	PUMP NO. 2 POWER	480V	10 HP	PUMP NO. 2	PUMP NO. 2 JUNCTION BOX	--	MANUFACTURER CABLE IN 2-1/2"C.
301	PUMP NO. 2 CONTROLS	120V	--	PUMP NO. 2	PUMP NO. 2 JUNCTION BOX	--	MANUFACTURER CABLE IN 2-1/2"C.
302	PUMP NO. 2 POWER	480V	10 HP	PUMP NO. 2 JUNCTION BOX	PUMP STARTER	--	3#8, #10 GND., 2"C.
400	ODOR CONTROL FEEDER	480V	30A	CONTROL PANEL	ODOR CONTROL PANEL	--	3#10 AWG., #10 GND., 1"C.
1000	LEVEL TRANSMITTER	24VDC	--	TRANSMITTER JUNCTION BOX	TRANSMITTER JUNCTION BOX	--	MANUFACTURER'S CABLE IN 2-1/2"C
1001	LEVEL TRANSMITTER	24VDC	--	TRANSMITTER JUNCTION BOX	TRANSMITTER JUNCTION BOX	--	MANUFACTURER'S CABLE IN 2-1/2"C
1002	COMBINED LEVEL TRANSMITTERS & FLOAT SWITCH	24VDC	--	CONTROL PANEL	TRANSMITTER JUNCTION BOX	--	2-TRI, 4#14, 2" C.
1003	WELL FLOAT SWITCHES	24VDC	--	TRANSMITTER JUNCTION BOX	FLOAT SWITCH NO.1 & NO.2	--	MANUFACTURER'S CABLE IN 2-1/2"C
1100	120VAC FOR RECEPTACLE	-	--	LIGHTING PANEL	RECEPTACLE NEXT TO TRANSMITTER J-BOX	--	2#12, #12G, 1" C.
1200	120VAC FOR RECEPTACLE	-	--	LIGHTING PANEL	RECEPTACLE NEXT TO PUMP NO.2 J-BOX	--	2#12, #12G, 1" C.
1300	SITE LIGHTING	120VAC	--	LIGHTING PANEL	SITE LIGHTS	--	2#12, #12G, 1" C.
1400	ODOR CONTROL SIGNAL	24VDC	--	CONTROL PANEL	ODOR CONTROL PANEL	--	8#14, #14 GND., 1" C.
1401	ODOR CONTROL BLOWER	480VAC	3 HP	ODOR CONTROL PANEL	ODOR CONTROL BLOWER	--	3#12, #12G, 1" C.

NO.	DATE	REVISION	APP.

NOTICE:
FOR YOUR SAFETY, YOU ARE REQUIRED BY TEXAS LAW TO CALL 811 AT LEAST 48 HOURS BEFORE YOU DIG SO THAT UNDERGROUND LINES CAN BE MARKED. THIS SIGNATURE DOES NOT FULFILL YOUR OBLIGATION TO CALL 811

VERIFICATION OF PRIVATE UTILITY LINES

Date

CenterPoint Energy natural gas utilities shown. (Gas service lines are not shown). This signature not be used for conflict verification.

Signature valid for six months.

Date

CenterPoint Energy/UNDERGROUND Electrical Facilities Verification ONLY. (This signature verifies existing underground facilities – not to be used for conflict verification)

Signature valid for six months.

Date

Approved for AT&T underground conduit facilities only.
Signature valid for one year.

PAPE–DAWSON
2107 CITYWEST BLVD, 3RD FLR I HOUSTON, TX 77042 I 713.428.2400
TEXAS ENGINEERING FIRM #470 I TEXAS SURVEYING FIRM #10028800

GAI
Gupta & Associates, Inc.
CONSULTING ENGINEERING
Registration No. F-2593
302 Dennis St.
Houston, Texas 77006
Tel: 713-636-2936
Fax: 713-636-2987
email: hforouzan@gaiconsulting.com

SURVEYED BY:
PAPE–DAWSON ENGINEERS
FB NO. 24–018

THIS DOCUMENT IS RELEASED FOR INTERIM REVIEW UNDER THE AUTHORIZATION OF HOSS FOROUZAN, P.E. (#77748) AND IS **NOT TO BE USED FOR CONSTRUCTION.**

CITY OF HOUSTON
HOUSTON PUBLIC WORKS

LIFT STATION REHABILITATION AND RECONSTRUCTION
BEN'S BRANCH, WOODLAND RIDGE, ELMWOOD HILLS, FOREST SHORES, TRAIL RIVER, RIVERLAWN

ELECTRICAL

ELMWOOD HILLS LIFT STATION CONDUIT SCHEDULE

WBS NUMBER	FOR CITY OF HOUSTON USE ONLY
R–000267–0180–3	
DRAWING SCALE	
AS NOTED	
CITY OF HOUSTON PM	
BRENDA JOHNSON P.E.	
SHEET NO. XX OF XX	

EH–E–10

FILE PATH: O:\H8107_Lift Station Rehabilitation And Reconstruction (Pape Dawson)\6 Drawings\Electrical\Working\Elmwood Hills\H8107_EH–E–10.dwg

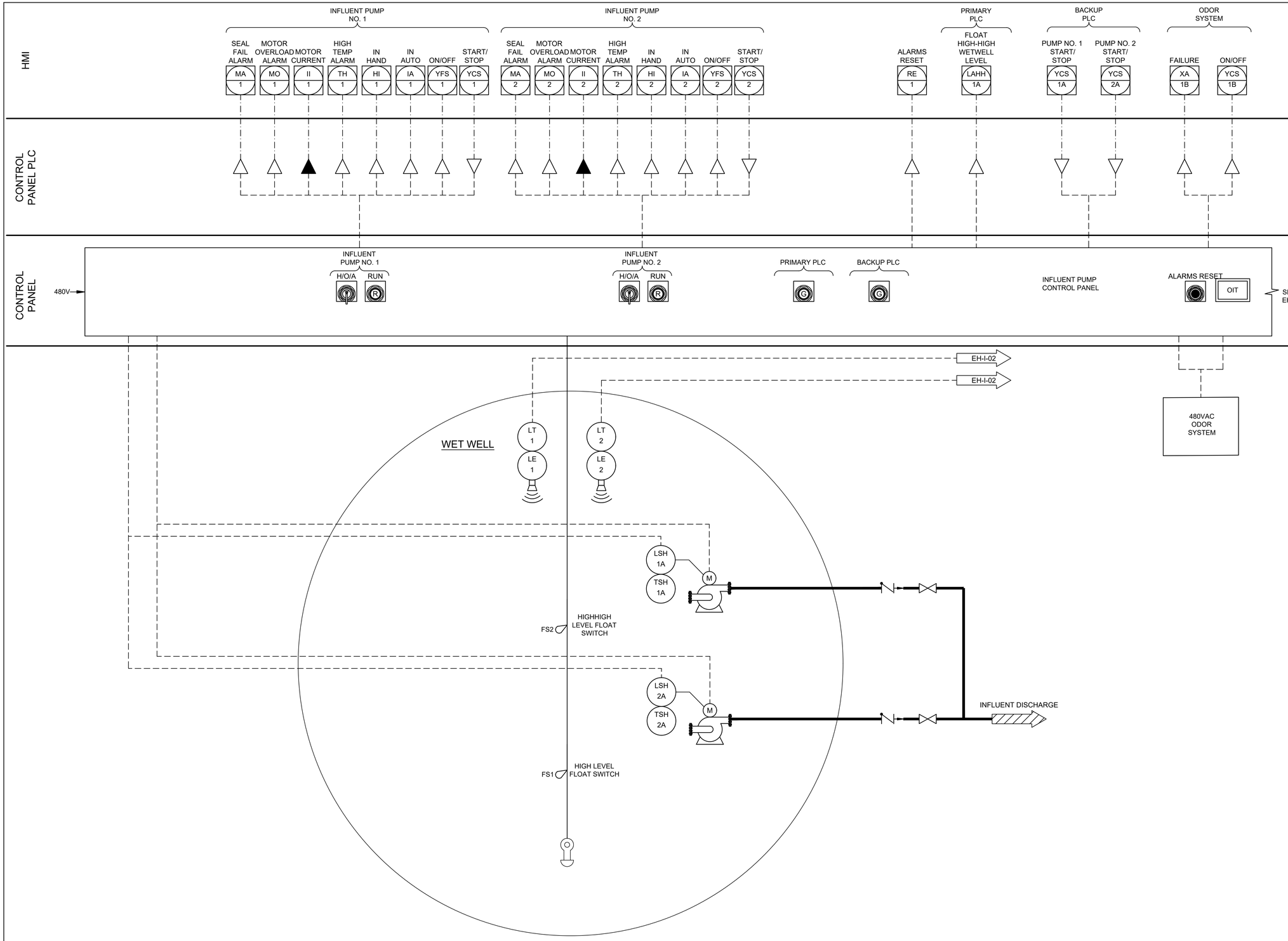

NO.	DATE	REVISION	APP.

NOTICE:
FOR YOUR SAFETY, YOU ARE REQUIRED BY TEXAS LAW TO CALL 811 AT LEAST 48 HOURS BEFORE YOU DIG SO THAT UNDERGROUND LINES CAN BE MARKED. THIS SIGNATURE DOES NOT FULFILL YOUR OBLIGATION TO CALL 811

VERIFICATION OF PRIVATE UTILITY LINES

Date

CenterPoint Energy natural gas utilities shown. (Gas service lines are not shown). This signature not be used for conflict verification.

Signature valid for six months.

Date

CenterPoint Energy/UNDERGROUND Electrical Facilities Verification ONLY. (This signature verifies existing underground facilities – not to be used for conflict verification)

Signature valid for six months.

Date

Approved for AT&T underground conduit facilities only.
Signature valid for one year.

PAPE–DAWSON
2107 CITYWEST BLVD, 3RD FLR I HOUSTON, TX 77042 I 713.428.2400
TEXAS ENGINEERING FIRM #470 I TEXAS SURVEYING FIRM #10028800

GAI
Gupta & Associates, Inc.
CONSULTING ENGINEERING
Registration No. F-2593
302 Dennis St.
Houston, Texas 77006
Tel: 713-636-2936
Fax: 713-636-2987
email: hforouzan@guiconsulting.com

SURVEYED BY:
PAPE–DAWSON ENGINEERS
FB NO. 24–018

THIS DOCUMENT IS RELEASED FOR INTERIM REVIEW UNDER THE AUTHORIZATION OF HOSS FOROUZAN, P.E. (#77748) AND IS **NOT TO BE USED FOR CONSTRUCTION.**

CITY OF HOUSTON
HOUSTON PUBLIC WORKS

LIFT STATION REHABILITATION AND RECONSTRUCTION
BEN'S BRANCH, WOODLAND RIDGE, ELMWOOD HILLS, FOREST SHORES, TRAIL RIVER, RIVERLAWN

INSTRUMENTATION

ELMWOOD HILLS LIFT STATION INSTRUMENTATION P&ID DIAGRAM–I

WBS NUMBER	FOR CITY OF HOUSTON USE ONLY
R–000267–0180–3	
DRAWING SCALE	
AS NOTED	
CITY OF HOUSTON PM	
BRENDA JOHNSON P.E.	
SHEET NO. XX OF XX	

EH–I–01

FILE PATH: O:\H8107_Lift Station Rehabilitation And Reconstruction (Pape Dawson)\6 Drawings\Instrumentation And Control\Working\Elmwood Hills\H8107_EH–I–01.dwg

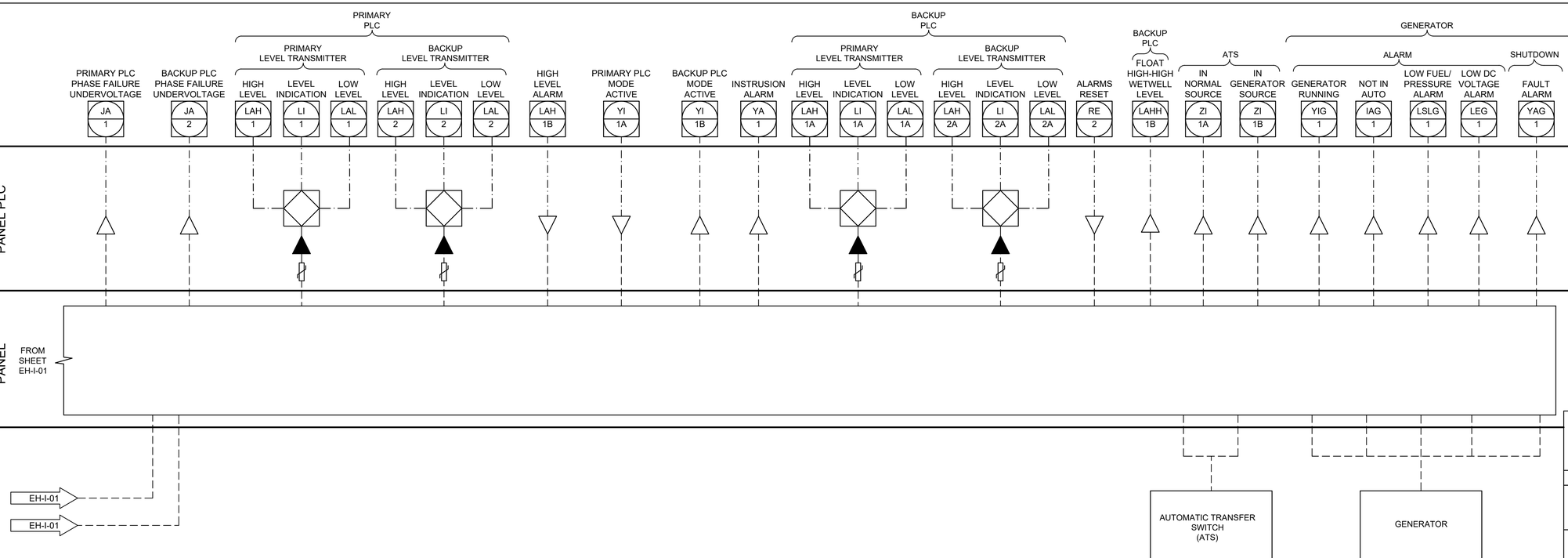

APP. | REVISION | DATE | NO.

NOTICE:
FOR YOUR SAFETY, YOU ARE REQUIRED BY TEXAS LAW TO CALL 811 AT LEAST 48 HOURS BEFORE YOU DIG SO THAT UNDERGROUND LINES CAN BE MARKED. THIS SIGNATURE DOES NOT FULFILL YOUR OBLIGATION TO CALL 811

VERIFICATION OF PRIVATE UTILITY LINES

Date

CenterPoint Energy natural gas utilities shown. (Gas service lines are not shown). This signature not be used for conflict verification.

Signature valid for six months.

Date

CenterPoint Energy/UNDERGROUND Electrical Facilities Verification ONLY. (This signature verifies existing underground facilities – not to be used for conflict verification)

Signature valid for six months.

Date

Approved for AT&T underground conduit facilities only.
Signature valid for one year.

PAPE–DAWSON
2107 CITYWEST BLVD, 3RD FLR I HOUSTON, TX 77042 I 713.428.2400
TEXAS ENGINEERING FIRM #470 I TEXAS SURVEYING FIRM #10028800

GAI
Gupta & Associates, Inc.
CONSULTING ENGINEERING
Registration No. F-2593
302 Dennis St.
Houston, Texas 77006
Tel: 713-636-2936
Fax: 713-636-2987
email: hforouzan@guiconsulting.com

SURVEYED BY:
PAPE–DAWSON ENGINEERS
FB NO. 24–018

THIS DOCUMENT IS RELEASED FOR INTERIM REVIEW UNDER THE AUTHORIZATION OF HOSS FOROUZAN, P.E. (#77748) AND IS **NOT TO BE USED FOR CONSTRUCTION.**

CITY OF HOUSTON
HOUSTON PUBLIC WORKS

LIFT STATION REHABILITATION AND RECONSTRUCTION
BEN'S BRANCH, WOODLAND RIDGE, ELMWOOD HILLS, FOREST SHORES, TRAIL RIVER, RIVERLAWN

INSTRUMENTATION

ELMWOOD HILLS LIFT STATION INSTRUMENTATION P&ID DIAGRAM – II

WBS NUMBER	FOR CITY OF HOUSTON USE ONLY
R–000267–0180–3	
DRAWING SCALE	
AS NOTED	
CITY OF HOUSTON PM	
BRENDA JOHNSON P.E.	
SHEET NO. XX OF XX	

EH–I–02

FILE PATH: O:\H8107_Lift Station Rehabilitation And Reconstruction (Pape Dawson)\6 Drawings\Instrumentation And Control\Working\Elmwood Hills\H8107_EH–I–02.dwg

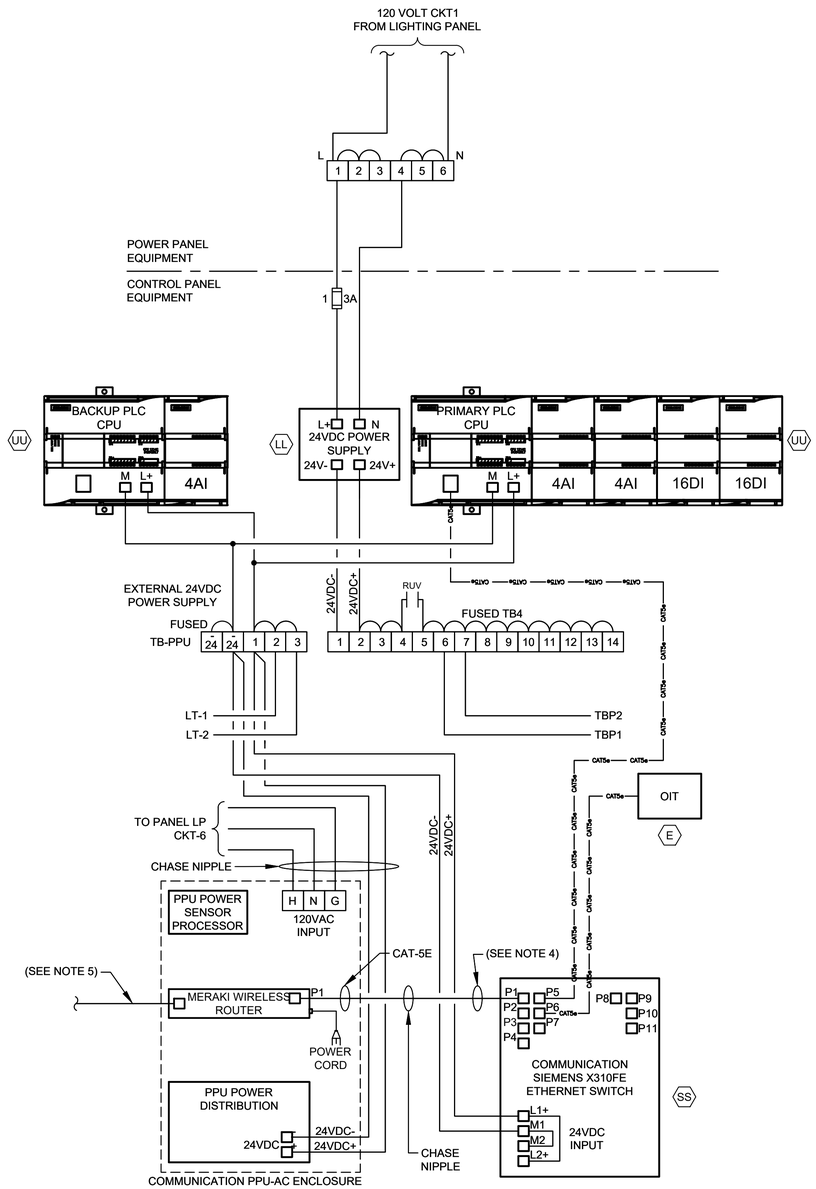

CONTROL POWER &
COMMUNICATIONS WIRING

DIAGRAM

NTS

(SEE NOTE 2 & 6)

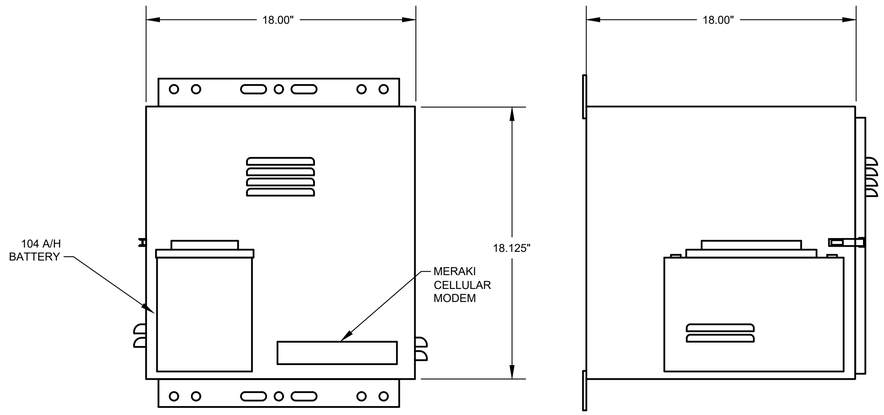

PPU-AC ENCLOSURE
FRONT VIEW

PPU-AC ENCLOSURE
SIDE VIEW

PPU-AC
CONTROL ENCLOSURE

ELEVATION

NTS

(SEE NOTE 7)

NOTES:

1. FOR DESCRIPTION AND RATINGS OF ITEMS INDICATED WITH ITEM TAG, SEE DEVICE RATINGS SCHEDULE.
2. REFER TO SPEC SECTION 16120 FOR CONDUCTOR COLOR CODE.
3. THE PLC POWER SUPPLY SHALL FEED THE 24VDC I/O.
4. ETHERNET CABLE FOR MERAKI CELLULAR ROUTER (P1).
5. POE CABLE TO RADIO.
6. COMMUNICATION PPU-AC & SCADA SHALL BE PROVIDED BY CONTRACTOR INCLUDING TO RUN CONDUITS & WIRES.
7. COORDINATE WITH VENDOR TO PROVIDE PROPER VENTILATION WHERE APPLICABLE.

NO.	DATE	REVISION	APP.

NOTICE:
FOR YOUR SAFETY, YOU ARE REQUIRED BY TEXAS LAW TO CALL 811 AT LEAST 48 HOURS BEFORE YOU DIG SO THAT UNDERGROUND LINES CAN BE MARKED. THIS SIGNATURE DOES NOT FULFILL YOUR OBLIGATION TO CALL 811

VERIFICATION OF PRIVATE UTILITY LINES

Date

CenterPoint Energy natural gas utilities shown. (Gas service lines are not shown). This signature not be used for conflict verification.

Signature valid for six months.

Date

CenterPoint Energy/UNDERGROUND Electrical Facilities Verification ONLY. (This signature verifies existing underground facilities – not to be used for conflict verification)

Signature valid for six months.

Date

Approved for AT&T underground conduit facilities only.
Signature valid for one year.

PAPE–DAWSON
2107 CITYWEST BLVD, 3RD FLR I HOUSTON, TX 77042 I 713.428.2400
TEXAS ENGINEERING FIRM #470 I TEXAS SURVEYING FIRM #10028800

GAI
Gupta & Associates, Inc.
CONSULTING ENGINEERING
Registration No. F-2593
302 Dennis St.
Houston, Texas 77006
Tel: 713-636-2936
Fax: 713-636-2987
email: hforouzan@guiconsulting.com

SURVEYED BY:
PAPE–DAWSON ENGINEERS
FB NO. 24–018

THIS DOCUMENT IS RELEASED FOR INTERIM REVIEW UNDER THE AUTHORIZATION OF HOSS FOROUZAN, P.E. (#77748) AND IS **NOT TO BE USED FOR CONSTRUCTION.**

CITY OF HOUSTON
HOUSTON PUBLIC WORKS

LIFT STATION REHABILITATION AND RECONSTRUCTION
BEN'S BRANCH, WOODLAND RIDGE, ELMWOOD HILLS, FOREST SHORES, TRAIL RIVER, RIVERLAWN

INSTRUMENTATION

ELMWOOD HILLS LIFT STATION COMMUNICATIONS DIAGRAM

WBS NUMBER	FOR CITY OF HOUSTON USE ONLY
R–000267–0180–3	
DRAWING SCALE	
AS NOTED	
CITY OF HOUSTON PM	
BRENDA JOHNSON P.E.	
SHEET NO. XX OF XX	

EH–I–03

FILE PATH: O:\H8107_Lift Station Rehabilitation And Reconstruction (Pape Dawson)\6 Drawings\Instrumentation And Control\Working\Elmwood Hills\H8107_EH-I-03.dwg

EQUIPMENT AND DEVICE SCHEDULE

ITEM	QUANTITY	DESCRIPTION
A	1	PANEL BOARD, 120/240V, 1 PHASE, 3 WIRE, 100A, 12 CKTS
B	2	FULL VOLTAGE, NON-REVERSING, SINGLE SPEED, AUTOMATIC MOTOR STARTER W/120 VOLT CONTROL COIL, NEMA SIZE AS SCHEDULED.
C	2	TIME DELAY RELAY WITH THREE FORM C CONTACTS, 120VAC COIL AND 11 PIN SOCKET BASE.
D	1	SINGLE CHANNEL INTRINSICALLY SAFE RELAY
E	1	PROGRAMMING SCREEN (OIT)
F	2	HAND-OFF-AUTO SWITCH, 3 POSITION, HEAVY-DUTY, OILTIGHT WITH 2 SETS OF CONTACT BLOCKS (PUMP CONTROL)
G	2	INDICATING LIGHT, HEAVY DUTY, OILTIGHT, RED, 24 VDC, LED, WITH "RUN" LEGEND
H	1	PERPETUAL POWER UNIT (PPU)
I	1	PUMP ALARM RESET PUSHBUTTON
J	2	SWITCH FOR CABINET LIGHT, 120V, 20A, SPST
K	3	DUPLEX RECEPTACLE, 120V, 20A, 2 WIRE, GROUNDED
L	2	24" LED STRIP LIGHT 120V SUITABLE FOR ZERO DEGREE OPERATION.
M	1	SURGE PROTECTOR - INCOMING POWER
N	*	NOT USED.
P	2	CURRENT TRANSFORMER, RATIO AS SCHEDULED W/4-20mA OUTPUT.
Q	12	TERMINAL BLOCKS, SIZED FOR MOTOR POWER REQUIREMENTS
R	*	RELAY WITH THREE FORM C CONTACTS, AND 11 PIN SOCKET BASE
S	*	NOT USED.
T	*	NAMEPLATES, SEE SPECIFICATIONS (SEE NAMEPLATE SCHEDULE)
U	2	SOLID STATE MOTOR OVERLOAD RELAY
V	6	FUSE HOLDER & FUSES - PHASE FAILURE
W	1	NEMA 3R GASKETED ALUMINUM ENCLOSURE WITHOUT VENTS 72"H x 48"W x 36"D
X	1	DOOR MOUNTED ROTARY HANDLE DISCONNECT SWITCH (SUITABLE FOR ENVIRONMENT)
Y	1	THERMAL-MAGNETIC MOLDED CASE MAIN CIRCUIT BREAKER, SIZE AS SCHEDULED
Z	2	ADJUSTABLE INSTANTENOUS TRIP MOTOR CIRCUIT PROTECTOR, SIZE AS SCHEDULED
AA	*	TERMINAL BLOCKS
BB	2	EXTERNAL OVERLOAD RESET PUSHBUTTON MECHANISM
CC	2	ANALOG I/O SURGE SUPPRESSOR
DD	1	WIRE DUCT 2" WIDE x 2" DEEP MINIMUM
EE	1	THERMAL-MAGNETIC MODLED CASE CIRCUIT BREAKER FOR LIGHTING TRANSFORMER, SIZE AS SCHEDULED
FF	1	GROUND BUS
GG	1	25 KVA, 480 - 240/120V,1ϕ, 3W DRY TYPE NEMA 3R ENCLOSURE TRANSFORMER (PAD MOUNTED)
HH	*	NOT USED.
II	1	120VAC - 24VAC POWER SUPPLY (AS REQUIRED)
JJ	11	CARTRIDGE FUSES & FUSE HOLDER
KK	8	QUARTER TURN CAPTIVE DOOR CLOSURE
LL	1	120VAC - 24VDC PLC POWER SUPPLY 5A
MM	2	MOTION SWITCH
NN	*	NOT USED
PP	2	INDICATING LED LIGHT, HEAVY DUTY, OILTIGHT, GREEN, 24 VDC, LED WITH " PRIMARY PLC" & "BACKUP PLC" LEGEND
QQ	*	NOT USED
RR	*	NOT USED
SS	1	COMMUNICATION ETHERNET SWITCH
TT	1	POWER SURGE PROTECTOR - CONTROL POWER
UU	2	PROGRAMMABLE LOGIC CONTROLLER WITH EXPANSION UNIT
VV	1	PHASE AND UNDER VOLTAGE MONITOR
WW	*	FUSED TERMINAL BLOCKS
XX	2	PUMP PROTECTION MODULE RATED FOR CLASS I, DIVISION I
YY	2	ANALOG SIGNAL ISOLATOR
ZZ	-	NOT USED
AB	-	NOT USED.
AC	1	POWER DISTRIBUTION BLOCK
AD	1	NEUTRAL LUG
AE	1	6" EXHAUST FAN, 120V, STAINLESS FILTERS & GRILL PACKAGE W/BUG GUARD
AF	1	T-STAT FOR EXHAUST FAN

* - AS SCHEDULED

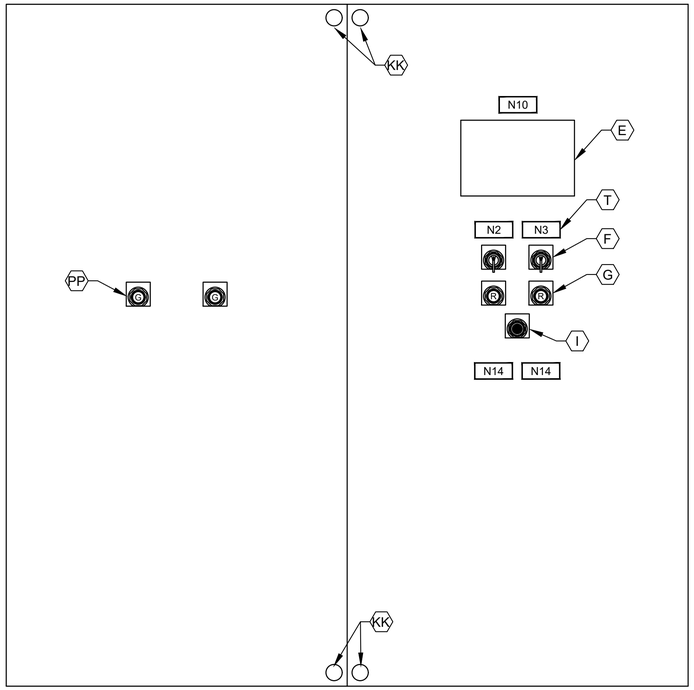

CONTROL PANEL FRONT INNER DOOR

ELEVATION

NTS

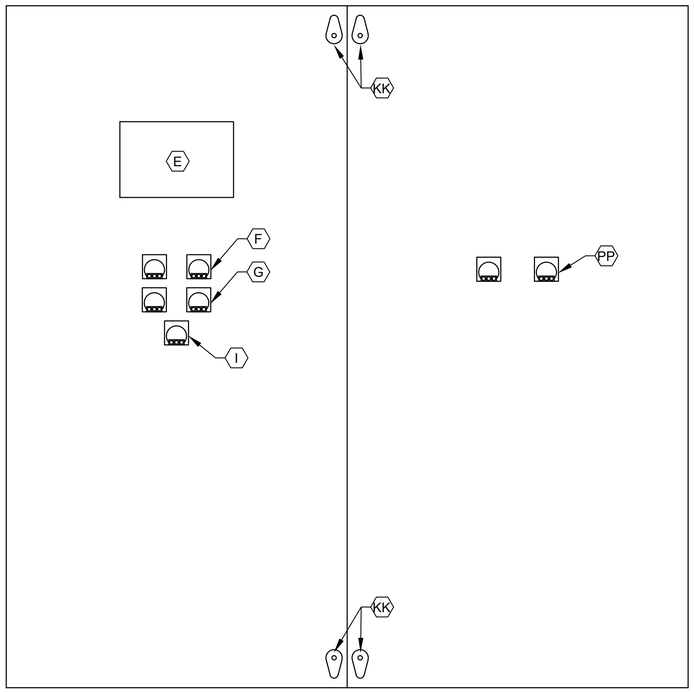

CONTROL PANEL BACK INNER DOOR

ELEVATION

NTS

NOTES:

1. NAMEPLATES SHALL BE MOUNTED TO PANELS USING STAINLESS STEEL HARDWARE.
2. REFER SPECIFICATIONS FOR ALL PANEL COMPONENTS.

NO.	DATE	REVISION	APP.

NOTICE:
FOR YOUR SAFETY, YOU ARE REQUIRED BY TEXAS LAW TO CALL 811 AT LEAST 48 HOURS BEFORE YOU DIG SO THAT UNDERGROUND LINES CAN BE MARKED. THIS SIGNATURE DOES NOT FULFILL YOUR OBLIGATION TO CALL 811

VERIFICATION OF PRIVATE UTILITY LINES

Date

CenterPoint Energy natural gas utilities shown. (Gas service lines are not shown). This signature not be used for conflict verification.

Signature valid for six months.

Date

CenterPoint Energy/UNDERGROUND Electrical Facilities Verification ONLY. (This signature verifies existing underground facilities – not to be used for conflict verification)

Signature valid for six months.

Date

Approved for AT&T underground conduit facilities only.
Signature valid for one year.

PAPE–DAWSON
2107 CITYWEST BLVD, 3RD FLR I HOUSTON, TX 77042 I 713.428.2400
TEXAS ENGINEERING FIRM #470 I TEXAS SURVEYING FIRM #10028800

GAI
Gupta & Associates, Inc.
CONSULTING ENGINEERING
Registration No. F-2593
302 Dennis St.
Houston, Texas 77006
Tel: 713-636-2936
Fax: 713-636-2987
email: hforouzan@guiconsulting.com

THIS DOCUMENT IS RELEASED FOR INTERIM REVIEW UNDER THE AUTHORIZATION OF HOSS FOROUZAN, P.E. (#77748) AND IS **NOT TO BE USED FOR CONSTRUCTION.**

SURVEYED BY:
PAPE–DAWSON ENGINEERS
FB NO. 24–018

CITY OF HOUSTON
HOUSTON PUBLIC WORKS

LIFT STATION REHABILITATION AND RECONSTRUCTION
BEN'S BRANCH, WOODLAND RIDGE, ELMWOOD HILLS, FOREST SHORES, TRAIL RIVER, RIVERLAWN

INSTRUMENTATION

ELMWOOD HILLS LIFT STATION CONTROL CABINET EQUIPMENT LAYOUT & SCHEDULE

WBS NUMBER	FOR CITY OF HOUSTON USE ONLY
R–000267–0180–3	
DRAWING SCALE	
AS NOTED	
CITY OF HOUSTON PM	
BRENDA JOHNSON P.E.	
SHEET NO. XX OF XX	

EH–I–04

FILE PATH: O:\H8107_Lift Station Rehabilitation And Reconstruction (Pape Dawson)\6 Drawings\Instrumentation And Control\Working\Elmwood Hills\H8107_EH–I–04.dwg

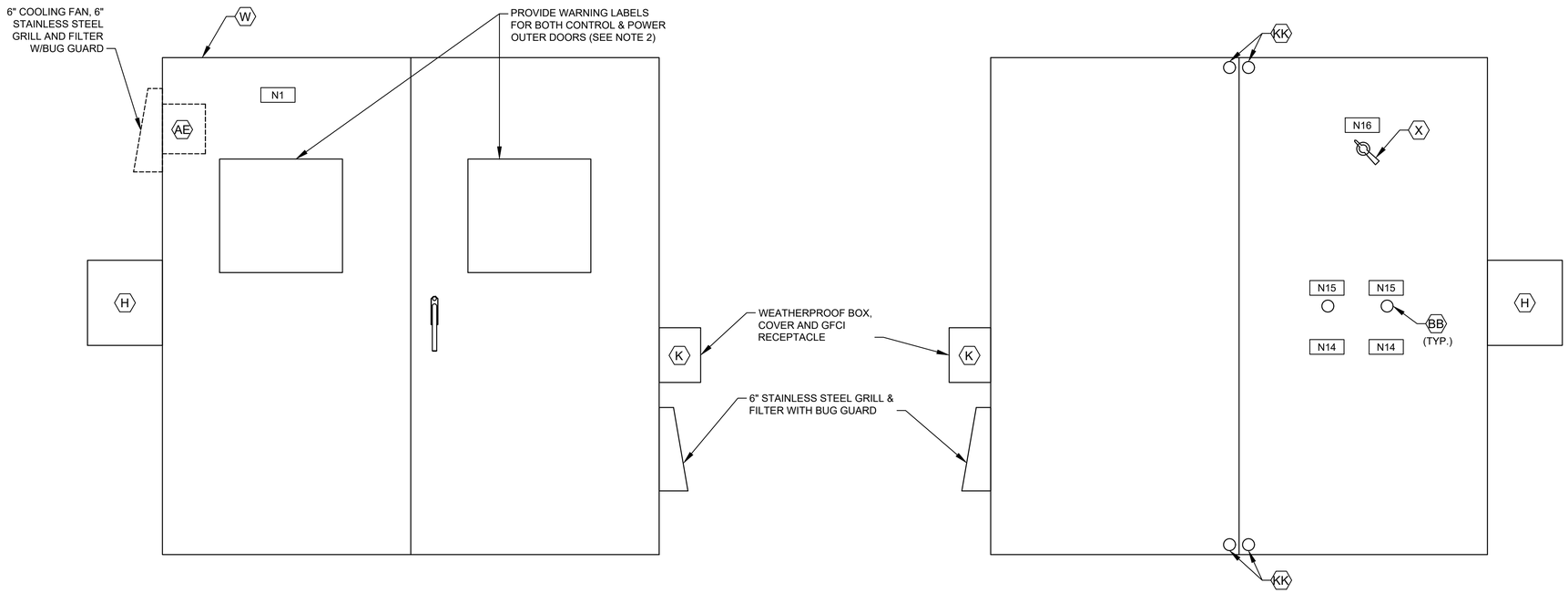

CONTROL CABINET (CONTROL SIDE)
OUTER DOOR

ELEVATION

NTS

CONTROL CABINET (POWER SIDE)
INNER DOOR

ELEVATION

NTS
(SEE NOTE 1)

NOTES:

1. SEE SHEET EH-I-04 FOR EQUIPMENT SCHEDULE.
2. REFER TO NEC SECTIONS 110.16 & 110.21

NAMEPLATE SCHEDULE

DESIGNATION	ENGRAVED	DESIGNATION	ENGRAVED
N1	PUMP STATION DESIGNATION	N8	NOT USED.
N2	PUMP NO. 1	N9	NOT USED.
N3	PUMP NO. 2	N10	PROGRAMMING SCREEN
N4	NOT USED.	N11	NOT USED.
N5	NOT USED.	N12	PRIMARY PLC
N6	NOT USED.	N13	BACKUP PLC
N7	NOT USED.	N14	MOTOR DATA
			HORSEPOWER (OUTPUT) ----------
			RPM AT FULL LOAD ----------
			TIME RATING ----------
			FREQUENCY ----------
			NUMBER OF PHASES ----------
			MODEL NUMBER ----------
			RATED VOLTAGE ----------
			SERVICE FACTOR ----------
			FULL LOAD AMPS ----------
			INSULATION CLAS ----------
			NEMA DESIGN LETTER ----------
			TEMPERATURE RISE ----------
			NEMA FRAME SIZE ----------
			DATE OF MANUFACTURE ----------
			THERMO PROTECTION (IF REQUIRED) --
			MOISTURE PROTECTION (IF REQUIRED)-
		N15	EXTERNAL OVERLOAD RESET PUSH BUTTON MECHANISM
		N16	MAIN BREAKER

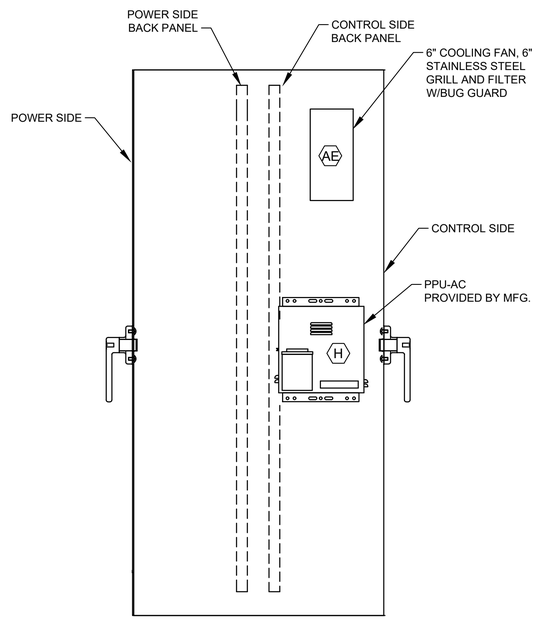

CONTROL CABINET (LEFT SIDE VIEW)

ELEVATION

NTS

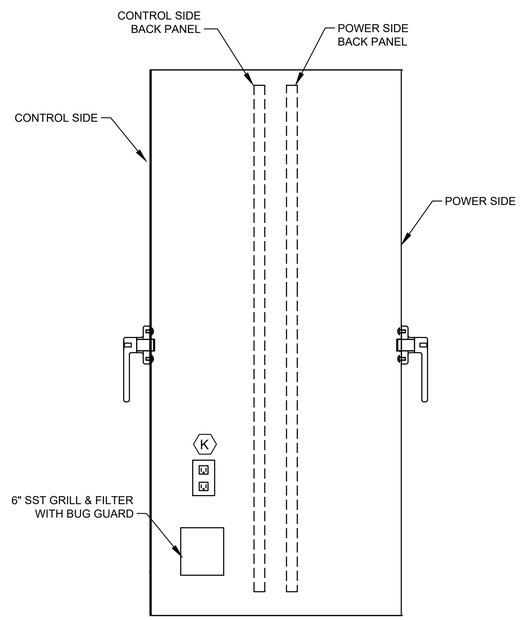

CONTROL CABINET (RIGHT SIDE VIEW)

ELEVATION

NTS

NO.	DATE	REVISION	APP.

NOTICE:
FOR YOUR SAFETY, YOU ARE REQUIRED BY TEXAS LAW TO CALL 811 AT LEAST 48 HOURS BEFORE YOU DIG SO THAT UNDERGROUND LINES CAN BE MARKED. THIS SIGNATURE DOES NOT FULFILL YOUR OBLIGATION TO CALL 811

VERIFICATION OF PRIVATE UTILITY LINES

Date

CenterPoint Energy natural gas utilities shown. (Gas service lines are not shown). This signature not be used for conflict verification.

Signature valid for six months.

Date

CenterPoint Energy/UNDERGROUND Electrical Facilities Verification ONLY. (This signature verifies existing underground facilities – not to be used for conflict verification)

Signature valid for six months.

Date

Approved for AT&T underground conduit facilities only.
Signature valid for one year.

PAPE–DAWSON
2107 CITYWEST BLVD, 3RD FLR I HOUSTON, TX 77042 I 713.428.2400
TEXAS ENGINEERING FIRM #470 I TEXAS SURVEYING FIRM #10028800

GAI
Gupta & Associates, Inc.
CONSULTING ENGINEERING
Registration No. F-2593
302 Dennis St.
Houston, Texas 77006
Tel: 713-636-2936
Fax: 713-636-2987
email: hforouzan@guiconsulting.com

SURVEYED BY:
PAPE–DAWSON ENGINEERS
FB NO. 24–018

THIS DOCUMENT IS RELEASED FOR INTERIM REVIEW UNDER THE AUTHORIZATION OF HOSS FOROUZAN, P.E. (#77748) AND IS **NOT TO BE USED FOR CONSTRUCTION.**

CITY OF HOUSTON

HOUSTON PUBLIC WORKS

LIFT STATION REHABILITATION AND RECONSTRUCTION
BEN'S BRANCH, WOODLAND RIDGE, ELMWOOD HILLS, FOREST SHORES, TRAIL RIVER, RIVERLAWN

INSTRUMENTATION

ELMWOOD HILLS LIFT STATION CONTROL CABINET EQUIPMENT LAYOUT–I

WBS NUMBER	FOR CITY OF HOUSTON USE ONLY
R–000267–0180–3	
DRAWING SCALE	
AS NOTED	
CITY OF HOUSTON PM	
BRENDA JOHNSON P.E.	
SHEET NO. XX OF XX	

EH–I–05

FILE PATH: O:\H8107_Lift Station Rehabilitation And Reconstruction (Pape Dawson)\6 Drawings\Instrumentation And Control\Working\Elmwood Hills\H8107_EH-I-05.dwg

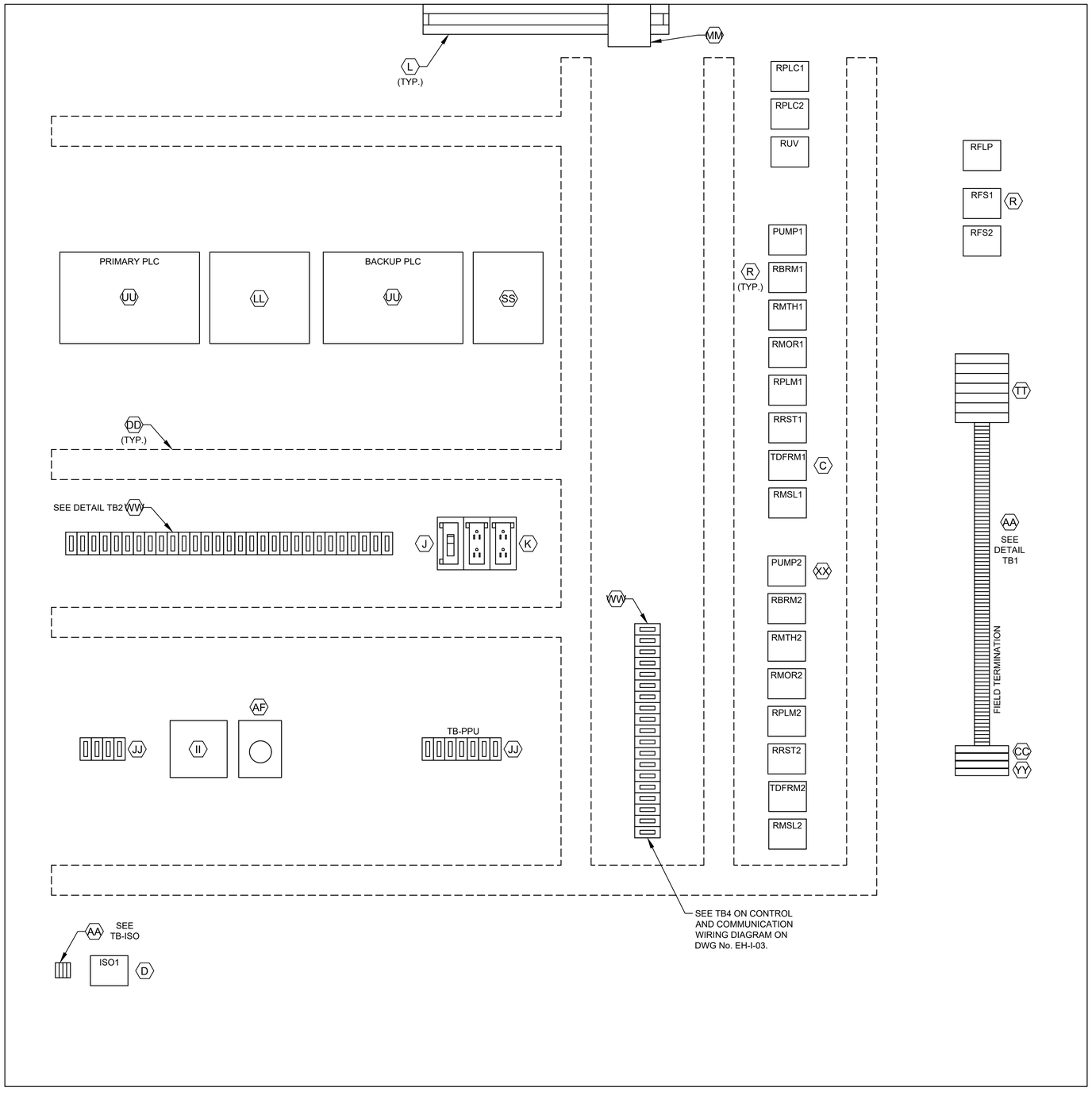

CONTROL PANEL
ELEVATION

L1A
L1N
SPARE
3
3N
49
50
51
52
53
54
1004
1
24V-
24V-
1002
2
11
1001
1001A
12
1003
1003A
1002
1004
18
3N
19
20
36
36N
41
42
43
44
SPARE
L1A
L1N
103
104
105
106
107
108
110
113
115
116
119
SPARE
203
204
205
206
207
208
210
213
215
216
219

DETAIL TB1

ALL L AND N FOR EACH PUMP CONTROL TO BE FUSED

36A
37A
50
52
54
52A
54A
L+
M
35B
38B
41B
47B
13B
13AB
13GB
L+
M
14B
14AB
14GB
L+
M
13
13A
13G
14
14A
14G
SPARE
18
SPARE
28
29
32
35B
33
42
44
SPARE
103
104
115
109
110
118
120
121
122
123
SPARE
209
210
211
218
220
222
223

DETAIL TB2

1500
1501
1503
1504

DETAIL TB-ISO

LEGEND	
TAG	DESCRIPTION
RMTH	MOTOR HIGH TEMPERATURE ALARM RELAY
RPLM	PLC PUMP RUN RELAY
RRST	PUMP RESET AUX RELAY
RPLC	PLC MODE AUX RELAY
RMOR	MOTOR OVERLOAD ALARM RELAY
RBRM	BACKUP SYSTEM RUN RELAY
RUV	UNDER VOLTAGE RELAY
ISO	INTRINSICALLY SAFE RELAY
RFS	PUMP RUN FLOAT SWITCH RELAY
TDFRM	TIMER FLOAT SWITCH RUN RELAY
RMSL	MOTOR SEAL LEAK ALARM RELAY
RFLP	FLOAT LOCKOUT PUMP RELAY

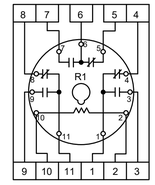

RELAY DETAIL
ITEM R

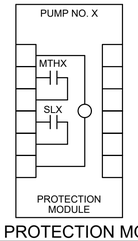

PUMP PROTECTION MODULE
DETAIL, ITEM XX

NOTE: REPLACE "X" WITH APPROPRIATE PUMP NO.

NOTES:

1. SEE SHEET EH-I-04 FOR EQUIPMENT SCHEDULE.

NO.	DATE	REVISION	APP.

NOTICE:
FOR YOUR SAFETY, YOU ARE REQUIRED BY TEXAS LAW TO CALL 811 AT LEAST 48 HOURS BEFORE YOU DIG SO THAT UNDERGROUND LINES CAN BE MARKED. THIS SIGNATURE DOES NOT FULFILL YOUR OBLIGATION TO CALL 811

VERIFICATION OF PRIVATE UTILITY LINES

Date

CenterPoint Energy natural gas utilities shown. (Gas service lines are not shown). This signature not be used for conflict verification.

Signature valid for six months.

Date

CenterPoint Energy/UNDERGROUND Electrical Facilities Verification ONLY. (This signature verifies existing underground facilities – not to be used for conflict verification)

Signature valid for six months.

Date

Approved for AT&T underground conduit facilities only.
Signature valid for one year.

PAPE–DAWSON
2107 CITYWEST BLVD, 3RD FLR I HOUSTON, TX 77042 I 713.428.2400
TEXAS ENGINEERING FIRM #470 I TEXAS SURVEYING FIRM #10028800

GAI
Gupta & Associates, Inc.
CONSULTING ENGINEERING
Registration No. F-2593
302 Dennis St.
Houston, Texas 77006
Tel: 713-636-2936
Fax: 713-636-2987
email: hforouzan@gaiconsulting.com

THIS DOCUMENT IS RELEASED FOR INTERIM REVIEW UNDER THE AUTHORIZATION OF HOSS FOROUZAN, P.E. (#77748) AND IS **NOT TO BE USED FOR CONSTRUCTION.**

SURVEYED BY:
PAPE–DAWSON ENGINEERS
FB NO. 24–018

CITY OF HOUSTON
HOUSTON PUBLIC WORKS

LIFT STATION REHABILITATION AND RECONSTRUCTION
BEN'S BRANCH, WOODLAND RIDGE, ELMWOOD HILLS, FOREST SHORES, TRAIL RIVER, RIVERLAWN

INSTRUMENTATION

ELMWOOD HILLS LIFT STATION CONTROL CABINET EQUIPMENT LAYOUT–II

WBS NUMBER	FOR CITY OF HOUSTON USE ONLY
R–000267–0180–3	
DRAWING SCALE	
AS NOTED	
CITY OF HOUSTON PM	
BRENDA JOHNSON P.E.	
SHEET NO. XX OF XX	

EH–I–06

FILE PATH: O:\H8107_Lift Station Rehabilitation And Reconstruction (Pape Dawson)\6 Drawings\Instrumentation And Control\Working\Elmwood Hills\H8107_EH–I–06.dwg

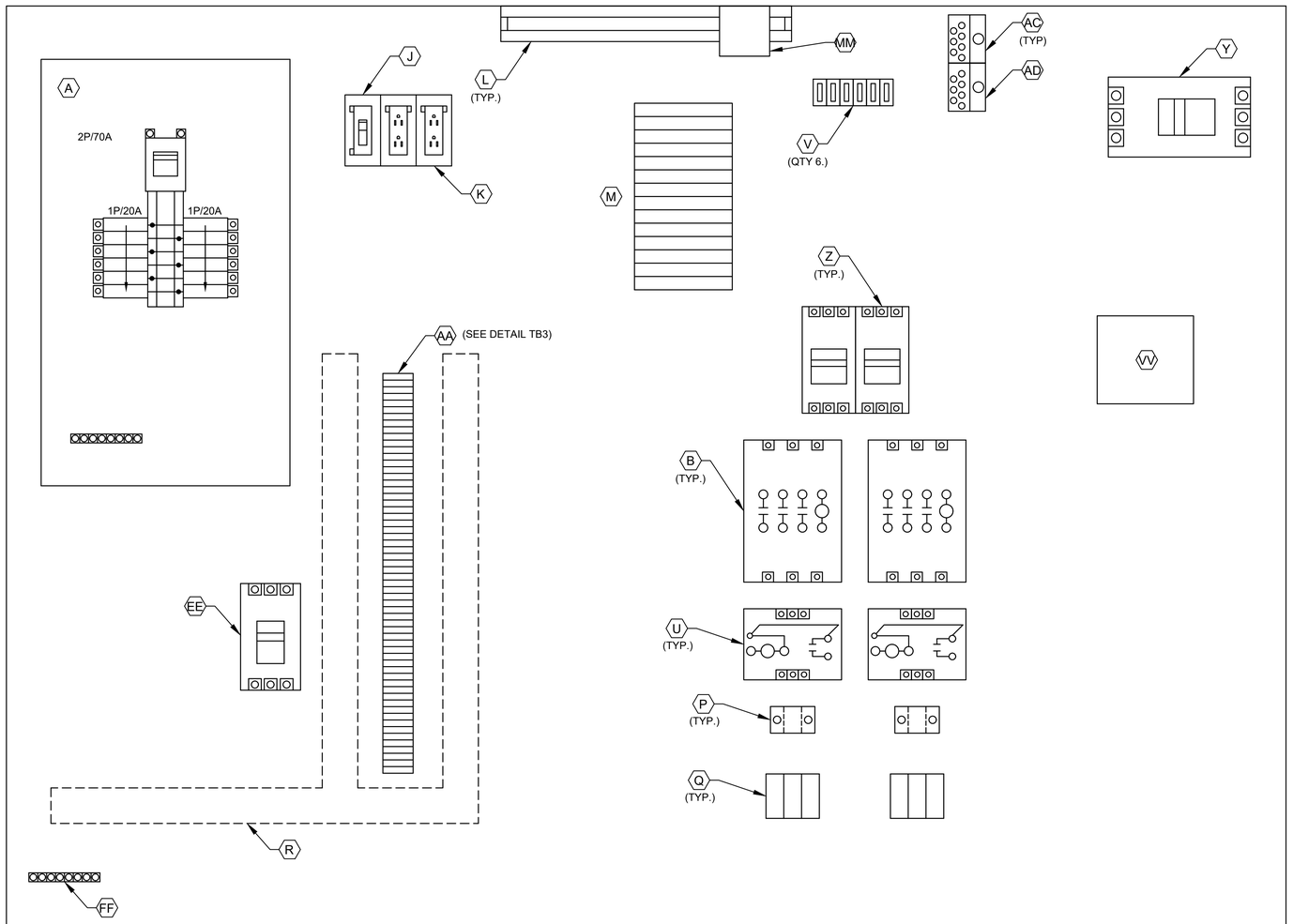

POWER PANEL
ELEVATION

3
18
L1A
L1N
SPARE
SPARE
103
104
105
106
107
108
110
113
115
116
119
SPARE
203
204
205
206
207
208
210
213
215
216
219
SPARE
SPARE
SPARE
SPARE
SPARE
SPARE
SPARE
SPARE
SPARE
SPARE

DETAIL TB3

NOTES:

1. SEE SHEET EH-I-04 FOR EQUIPMENT SCHEDULE.

NO.	DATE	REVISION	APP.

NOTICE:
FOR YOUR SAFETY, YOU ARE REQUIRED BY TEXAS LAW TO CALL 811 AT LEAST 48 HOURS BEFORE YOU DIG SO THAT UNDERGROUND LINES CAN BE MARKED. THIS SIGNATURE DOES NOT FULFILL YOUR OBLIGATION TO CALL 811

VERIFICATION OF PRIVATE UTILITY LINES

Date

CenterPoint Energy natural gas utilities shown. (Gas service lines are not shown). This signature not be used for conflict verification.

Signature valid for six months.

Date

CenterPoint Energy/UNDERGROUND Electrical Facilities Verification ONLY. (This signature verifies existing underground facilities – not to be used for conflict verification)

Signature valid for six months.

Date

Approved for AT&T underground conduit facilities only.
Signature valid for one year.

PAPE-DAWSON
2107 CITYWEST BLVD, 3RD FLR I HOUSTON, TX 77042 I 713.428.2400
TEXAS ENGINEERING FIRM #470 I TEXAS SURVEYING FIRM #10028800

GAI
Gupta & Associates, Inc.
CONSULTING ENGINEERING
Registration No. F-2593
302 Dennis St.
Houston, Texas 77006
Tel: 713-636-2936
Fax: 713-636-2987
email: hforouzan@gaiconsulting.com

SURVEYED BY:
PAPE-DAWSON ENGINEERS
FB NO. 24-018

THIS DOCUMENT IS RELEASED FOR INTERIM REVIEW UNDER THE AUTHORIZATION OF HOSS FOROUZAN, P.E. (#77748) AND IS **NOT TO BE USED FOR CONSTRUCTION.**

CITY OF HOUSTON
HOUSTON PUBLIC WORKS

LIFT STATION REHABILITATION AND RECONSTRUCTION
BEN'S BRANCH, WOODLAND RIDGE, ELMWOOD HILLS, FOREST SHORES, TRAIL RIVER, RIVERLAWN

INSTRUMENTATION

ELMWOOD HILLS LIFT STATION CONTROL CABINET EQUIPMENT LAYOUT–III

WBS NUMBER	FOR CITY OF HOUSTON USE ONLY
R-000267-0180-3	
DRAWING SCALE	
AS NOTED	
CITY OF HOUSTON PM	
BRENDA JOHNSON P.E.	
SHEET NO. XX OF XX	

EH-I-07

FILE PATH: O:\H8107_Lift Station Rehabilitation And Reconstruction (Pape Dawson)\6 Drawings\Instrumentation And Control\Working\Elmwood Hills\H8107_EH-I-07.dwg

FILE PATH: O:\H8107_Lift Station Rehabilitation And Reconstruction (Pape Dawson)\6 Drawings\Instrumentation And Control\Working\Elmwood Hills\H8107_EH-I-08.dwg

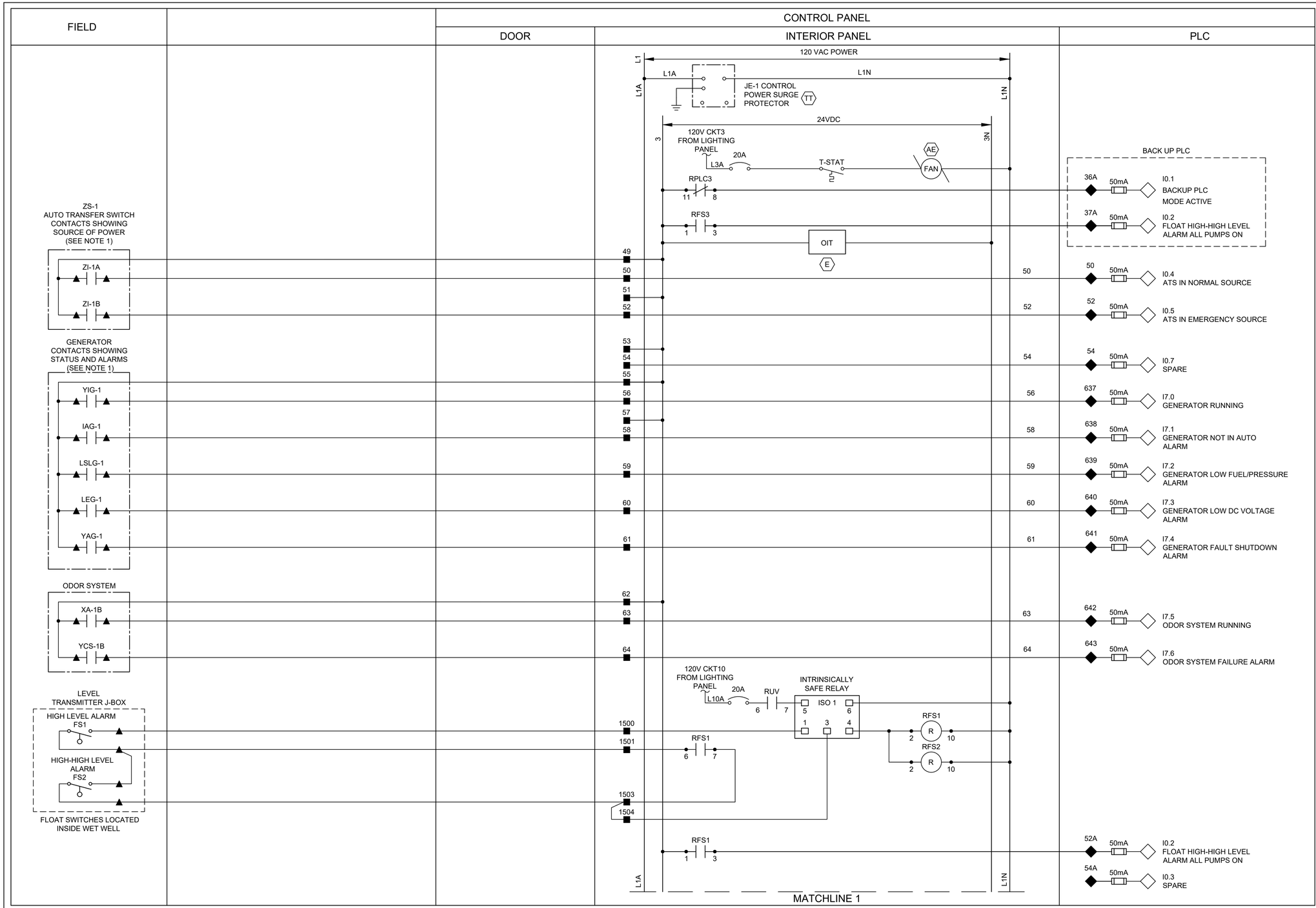

LEGEND

- △ DEVICE OR FIELD TERMINAL LOCATED AT MOTOR
- ✳ DEVICE OR FIELD TERMINAL LOCATED REMOTE
- □ DEVICE OR FIELD TERMINAL LOCATED AT MCC/POWER PANEL
- ■ FIELD TERMINAL LOCATED AT CONTROL PANEL
- ▲ REMOTE TERMINAL
- ● DEVICE TERMINAL NO.
- ◆ PLC INTERFACE TERMINAL

NO.	DATE	REVISION	APP.

NOTES:

1. PROVIDE AUTO TRANSFER SWITCH DRY CONTACT.
2. ALL FLOAT CONTROL CIRCUIT WIRES COLOR SHALL BE YELLOW.

NOTICE:
FOR YOUR SAFETY, YOU ARE REQUIRED BY TEXAS LAW TO CALL 811 AT LEAST 48 HOURS BEFORE YOU DIG SO THAT UNDERGROUND LINES CAN BE MARKED. THIS SIGNATURE DOES NOT FULFILL YOUR OBLIGATION TO CALL 811

VERIFICATION OF PRIVATE UTILITY LINES

NOTES:

1. PROVIDE MANUAL TRANSFER SWITCH DRY CONTACT.
2. ALL FLOAT CONTROL CIRCUIT WIRES COLOR SHALL BE YELLOW.

Date

CenterPoint Energy natural gas utilities shown. (Gas service lines are not shown) This signature not be used for conflict verification.
Signature valid for six months.

Date

CenterPoint Energy/UNDERGROUND Electrical Facilities Verification ONLY. (This signature verifies existing underground facilities – not to be used for conflict verification)
Signature valid for six months.

Date

Approved for AT&T underground conduit facilities only.
Signature valid for one year.

PAPE–DAWSON
2107 CITYWEST BLVD, 3RD FLR I HOUSTON, TX 77042 I 713.428.2400
TEXAS ENGINEERING FIRM #470 I TEXAS SURVEYING FIRM #10028800

GAI
Gupta & Associates, Inc.
CONSULTING ENGINEERING
Registration No. F-2593
302 Dennis St.
Houston, Texas 77006
Tel: 713-636-2936
Fax: 713-636-2987
email: hforouzan@gaiconsulting.com

SURVEYED BY:
PAPE–DAWSON ENGINEERS
FB NO. 24–018

THIS DOCUMENT IS RELEASED FOR INTERIM REVIEW UNDER THE AUTHORIZATION OF HOSS FOROUZAN, P.E. (#77748) AND IS **NOT TO BE USED FOR CONSTRUCTION.**

CITY OF HOUSTON
HOUSTON PUBLIC WORKS

LIFT STATION REHABILITATION AND RECONSTRUCTION
BEN'S BRANCH, WOODLAND RIDGE, ELMWOOD HILLS, FOREST SHORES, TRAIL RIVER, RIVERLAWN

INSTRUMENTATION

ELMWOOD HILLS LIFT STATION CONTROL PANEL CONTROL WIRING DIAGRAM–I

WBS NUMBER	FOR CITY OF HOUSTON USE ONLY
R–000267–0180–3	
DRAWING SCALE	
AS NOTED	
CITY OF HOUSTON PM	
BRENDA JOHNSON P.E.	
SHEET NO. XX OF XX	

EH–I–08

FILE PATH: O:\H8107_Lift Station Rehabilitation And Reconstruction (Pape Dawson)\6 Drawings\Instrumentation And Control\Working\Elmwood Hills\H8107_EH-I-09.dwg

FIELD		CONTROL PANEL		
		DOOR	INTERIOR PANEL	PLC

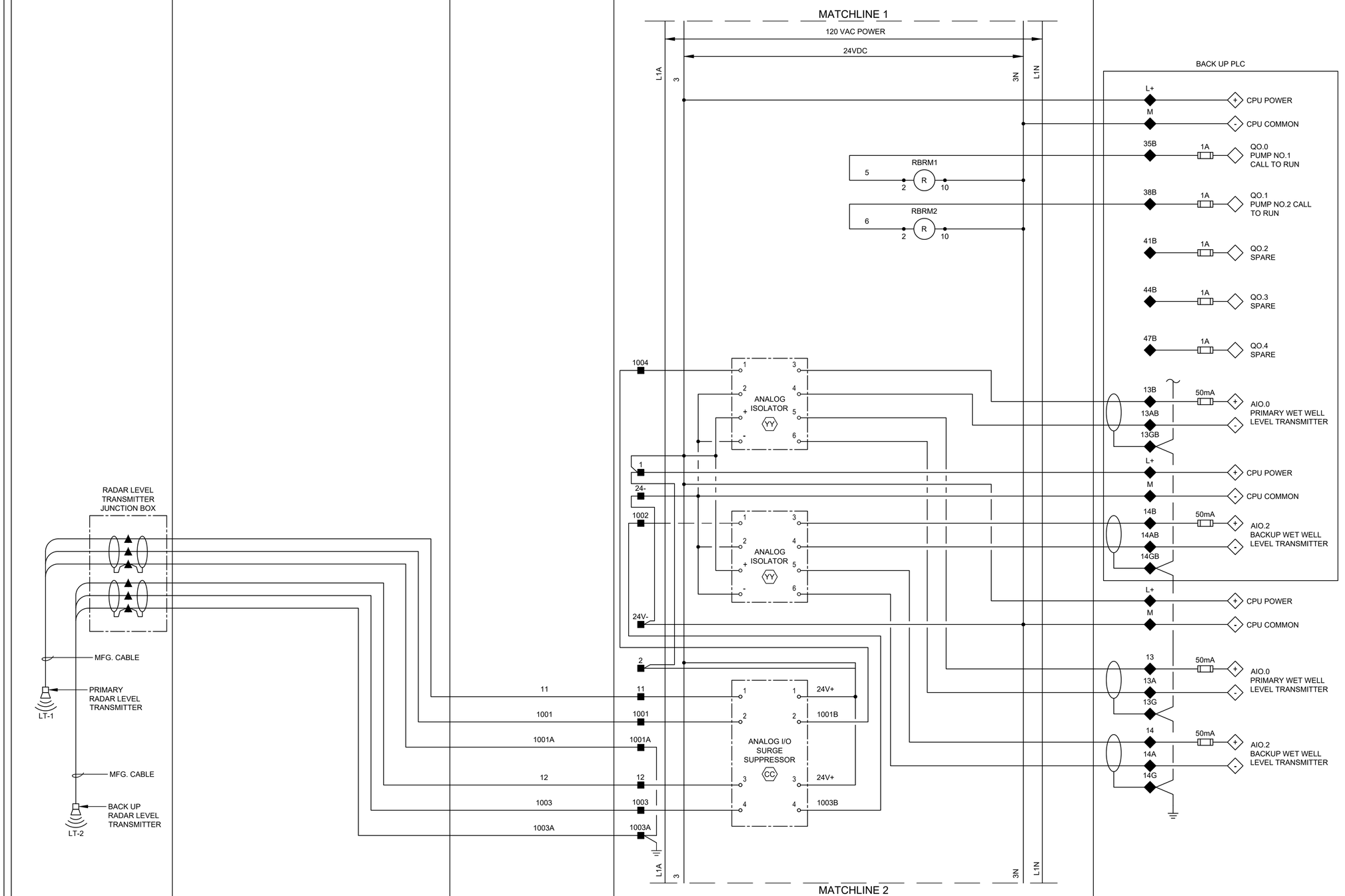

LEGEND

- △ DEVICE OR FIELD TERMINAL LOCATED AT MOTOR
- ✳ DEVICE OR FIELD TERMINAL LOCATED REMOTE
- □ DEVICE OR FIELD TERMINAL LOCATED AT MCC/POWER PANEL
- ■ FIELD TERMINAL LOCATED AT CONTROL PANEL
- ▲ REMOTE TERMINAL
- ● DEVICE TERMINAL NO.
- ◆ PLC INTERFACE TERMINAL

NO.	DATE	REVISION	APP.

NOTICE:
FOR YOUR SAFETY, YOU ARE REQUIRED BY TEXAS LAW TO CALL 811 AT LEAST 48 HOURS BEFORE YOU DIG SO THAT UNDERGROUND LINES CAN BE MARKED. THIS SIGNATURE DOES NOT FULFILL YOUR OBLIGATION TO CALL 811

VERIFICATION OF PRIVATE UTILITY LINES

NOTES:

1. PROVIDE MANUAL TRANSFER SWITCH DRY CONTACT.
2. ALL FLOAT CONTROL CIRCUIT WIRES COLOR SHALL BE YELLOW. Signature valid for six months.

Date
CenterPoint Energy natural gas utilities shown. (Gas service lines are not shown) This signature not be used for conflict verification.

Date
CenterPoint Energy/UNDERGROUND Electrical Facilities Verification ONLY. (This signature verifies existing underground facilities – not to be used for conflict verification)
Signature valid for six months.

Date
Approved for AT&T underground conduit facilities only.
Signature valid for one year.

PAPE–DAWSON
2107 CITYWEST BLVD, 3RD FLR I HOUSTON, TX 77042 I 713.428.2400
TEXAS ENGINEERING FIRM #470 I TEXAS SURVEYING FIRM #10028800

GAI
Gupta & Associates, Inc.
CONSULTING ENGINEERING
Registration No. F-2593
302 Dennis St.
Houston, Texas 77006
Tel: 713-636-2936
Fax: 713-636-2987
email: hforouzan@guiconsulting.com

THIS DOCUMENT IS RELEASED FOR INTERIM REVIEW UNDER THE AUTHORIZATION OF HOSS FOROUZAN, P.E. (#77748) AND IS **NOT TO BE USED FOR CONSTRUCTION.**

SURVEYED BY:
PAPE–DAWSON ENGINEERS
FB NO. 24–018

CITY OF HOUSTON
HOUSTON PUBLIC WORKS

LIFT STATION REHABILITATION AND RECONSTRUCTION
BEN'S BRANCH, WOODLAND RIDGE, ELMWOOD HILLS, FOREST SHORES, TRAIL RIVER, RIVERLAWN

INSTRUMENTATION

ELMWOOD HILLS LIFT STATION CONTROL PANEL CONTROL WIRING DIAGRAM–II

WBS NUMBER	FOR CITY OF HOUSTON USE ONLY
R–000267–0180–3	
DRAWING SCALE	
AS NOTED	
CITY OF HOUSTON PM	
BRENDA JOHNSON P.E.	
SHEET NO. XX OF XX	

EH–I–09

FILE PATH: O:\H8107_Lift Station Rehabilitation And Reconstruction (Pape Dawson)\6 Drawings\Instrumentation And Control\Working\Elmwood Hills\H8107_EH-I-10.dwg

FIELD	POWER PANEL	CONTROL PANEL		
		DOOR	INTERIOR PANEL	PLC

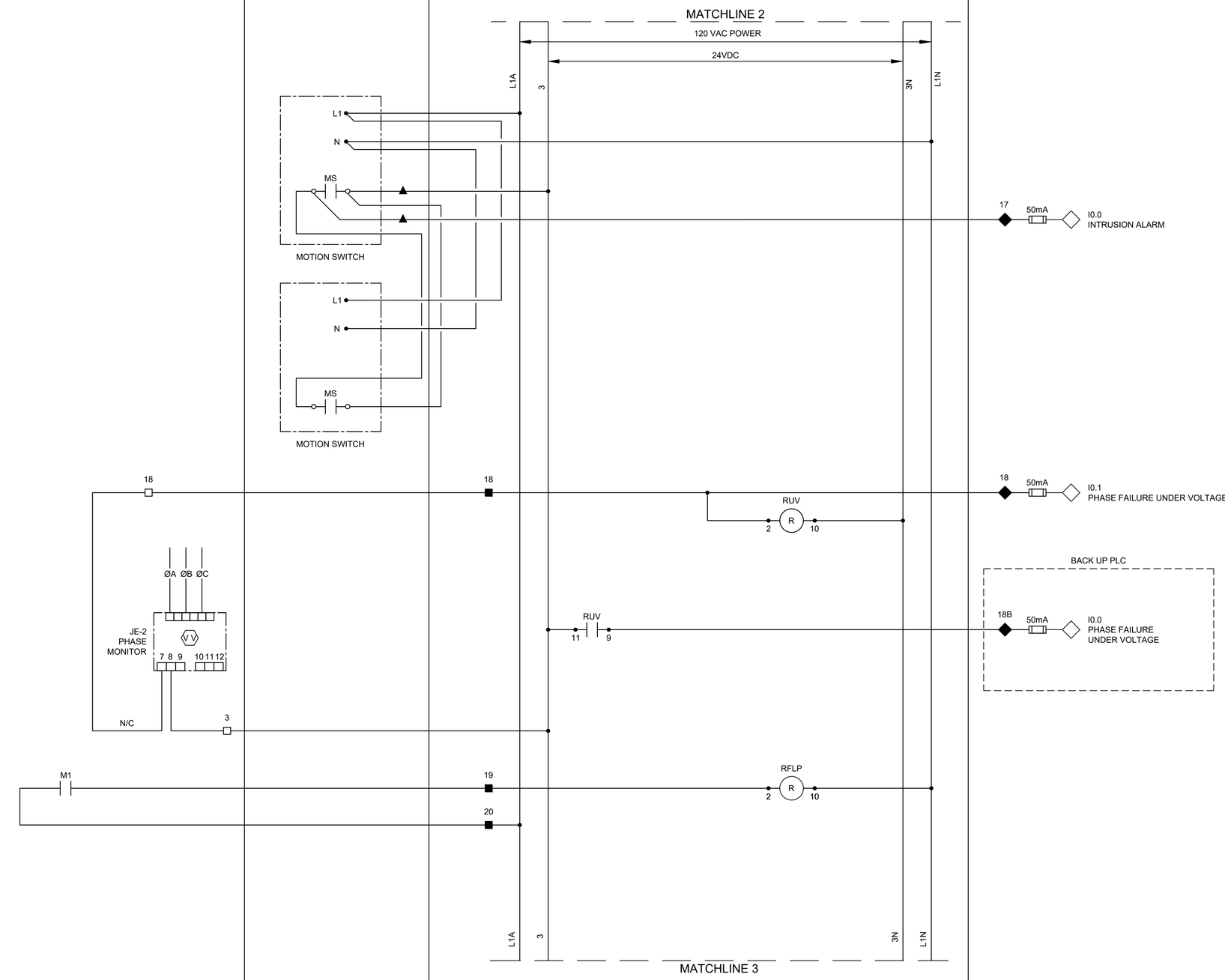

LEGEND

- △ DEVICE OR FIELD TERMINAL LOCATED AT MOTOR
- ✳ DEVICE OR FIELD TERMINAL LOCATED REMOTE
- □ DEVICE OR FIELD TERMINAL LOCATED AT MCC/POWER PANEL
- ■ FIELD TERMINAL LOCATED AT CONTROL PANEL
- ▲ REMOTE TERMINAL
- ● DEVICE TERMINAL NO.
- ◆ PLC INTERFACE TERMINAL

NO.	DATE	REVISION	APP.

NOTES:

1. PROVIDE ONE UNIT TRANSCEIVER EACH FOR CONTROL PANEL AND POWER PANEL DOOR, WIRED IN PARALLEL.
2. ALL FLOAT CONTROL CIRCUIT WIRES COLOR SHALL BE YELLOW.

NOTICE:
FOR YOUR SAFETY, YOU ARE REQUIRED BY TEXAS LAW TO CALL 811 AT LEAST 48 HOURS BEFORE YOU DIG SO THAT UNDERGROUND LINES CAN BE MARKED. THIS SIGNATURE DOES NOT FULFILL YOUR OBLIGATION TO CALL 811

VERIFICATION OF PRIVATE UTILITY LINES

Date

CenterPoint Energy natural gas utilities shown. (Gas service lines are not shown). This signature not be used for conflict verification.

Signature valid for six months.

Date

CenterPoint Energy/UNDERGROUND Electrical Facilities Verification ONLY. (This signature verifies existing underground facilities – not to be used for conflict verification)

Signature valid for six months.

Date

Approved for AT&T underground conduit facilities only.
Signature valid for one year.

PAPE–DAWSON
2107 CITYWEST BLVD, 3RD FLR I HOUSTON, TX 77042 I 713.428.2400
TEXAS ENGINEERING FIRM #470 I TEXAS SURVEYING FIRM #10028800

GAI
Gupta & Associates, Inc.
CONSULTING ENGINEERING
Registration No. F-2593
302 Dennis St.
Houston, Texas 77006
Tel: 713-636-2936
Fax: 713-636-2987
email: hforouzan@guiconsulting.com

SURVEYED BY:
PAPE–DAWSON ENGINEERS
FB NO. 24–018

THIS DOCUMENT IS RELEASED FOR INTERIM REVIEW UNDER THE AUTHORIZATION OF HOSS FOROUZAN, P.E. (#77748) AND IS **NOT TO BE USED FOR CONSTRUCTION.**

CITY OF HOUSTON
HOUSTON PUBLIC WORKS

LIFT STATION REHABILITATION AND RECONSTRUCTION
BEN'S BRANCH, WOODLAND RIDGE, ELMWOOD HILLS, FOREST SHORES, TRAIL RIVER, RIVERLAWN

INSTRUMENTATION

ELMWOOD HILLS LIFT STATION CONTROL PANEL CONTROL WIRING DIAGRAM–III

WBS NUMBER	FOR CITY OF HOUSTON USE ONLY
R–000267–0180–3	
DRAWING SCALE	
AS NOTED	
CITY OF HOUSTON PM	
BRENDA JOHNSON P.E.	
SHEET NO. XX OF XX	

EH–I–10

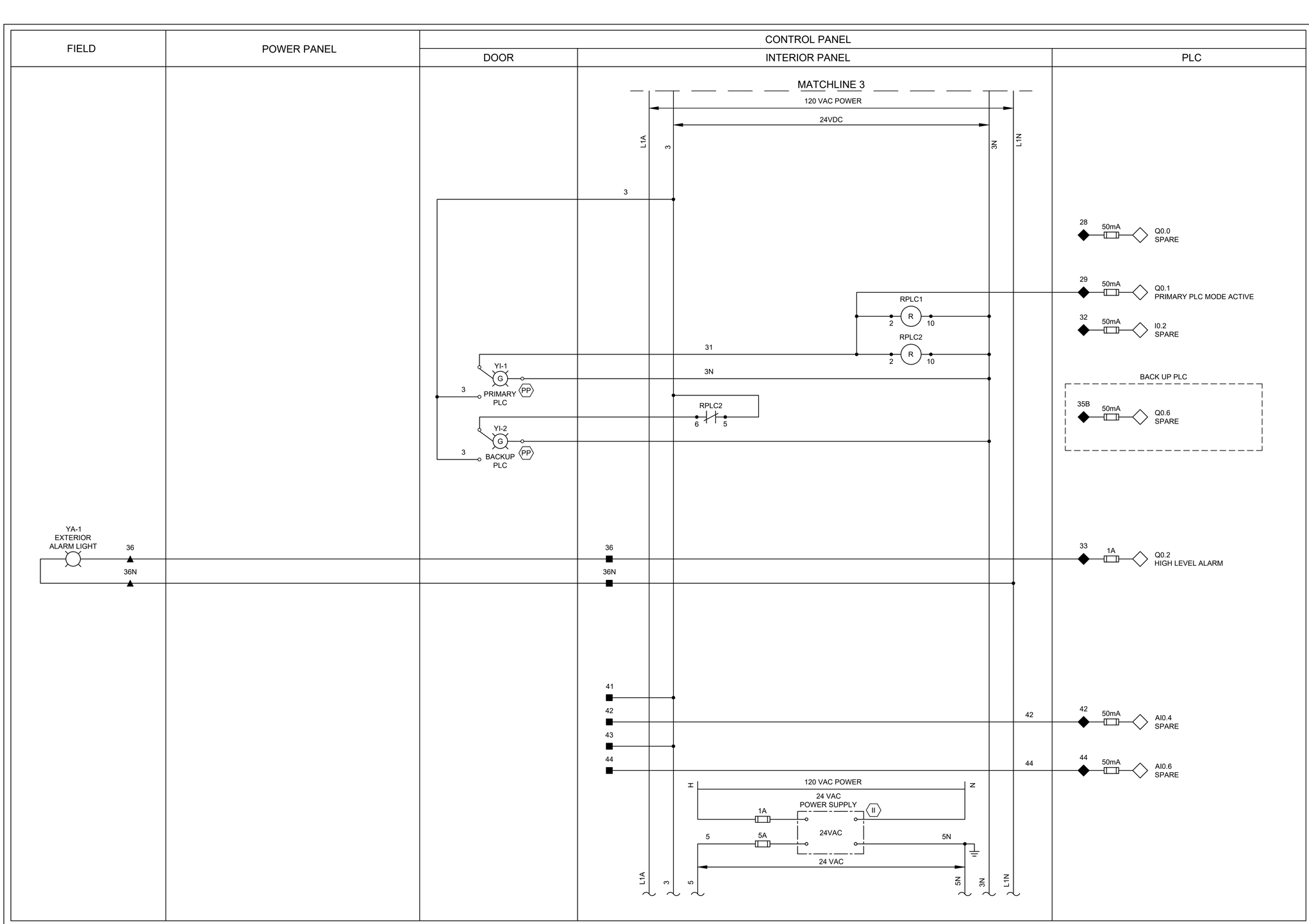

LEGEND

- △ DEVICE OR FIELD TERMINAL LOCATED AT MOTOR
- ✳ DEVICE OR FIELD TERMINAL LOCATED REMOTE
- □ DEVICE OR FIELD TERMINAL LOCATED AT MCC/POWER PANEL
- ■ FIELD TERMINAL LOCATED AT CONTROL PANEL
- ▲ REMOTE TERMINAL
- ● DEVICE TERMINAL NO.
- ◆ PLC INTERFACE TERMINAL

NO.	DATE	REVISION	APP.

NOTICE:
FOR YOUR SAFETY, YOU ARE REQUIRED BY TEXAS LAW TO CALL 811 AT LEAST 48 HOURS BEFORE YOU DIG SO THAT UNDERGROUND LINES CAN BE MARKED. THIS SIGNATURE DOES NOT FULFILL YOUR OBLIGATION TO CALL 811

VERIFICATION OF PRIVATE UTILITY LINES

Date

CenterPoint Energy natural gas utilities shown. (Gas service lines are not shown). This signature not be used for conflict verification.

Signature valid for six months.

Date

CenterPoint Energy/UNDERGROUND Electrical Facilities Verification ONLY. (This signature verifies existing underground facilities – not to be used for conflict verification)

Signature valid for six months.

Date

Approved for AT&T underground conduit facilities only.
Signature valid for one year.

PAPE–DAWSON
2107 CITYWEST BLVD, 3RD FLR I HOUSTON, TX 77042 I 713.428.2400
TEXAS ENGINEERING FIRM #470 I TEXAS SURVEYING FIRM #10028800

GAI
Gupta & Associates, Inc.
CONSULTING ENGINEERING
Registration No. F-2593
302 Dennis St.
Houston, Texas 77006
Tel: 713-636-2936
Fax: 713-636-2987
email: hforouzan@gaiconsulting.com

THIS DOCUMENT IS RELEASED FOR INTERIM REVIEW UNDER THE AUTHORIZATION OF HOSS FOROUZAN, P.E. (#77748) AND IS **NOT TO BE USED FOR CONSTRUCTION.**

SURVEYED BY:
PAPE–DAWSON ENGINEERS
FB NO. 24–018

CITY OF HOUSTON
HOUSTON PUBLIC WORKS

LIFT STATION REHABILITATION AND RECONSTRUCTION
BEN'S BRANCH, WOODLAND RIDGE, ELMWOOD HILLS, FOREST SHORES, TRAIL RIVER, RIVERLAWN

INSTRUMENTATION

ELMWOOD HILLS LIFT STATION CONTROL PANEL CONTROL WIRING DIAGRAM–IV

WBS NUMBER	FOR CITY OF HOUSTON USE ONLY
R–000267–0180–3	
DRAWING SCALE	
AS NOTED	
CITY OF HOUSTON PM	
BRENDA JOHNSON P.E.	
SHEET NO. XX OF XX	

EH–I–11

FILE PATH: O:\H8107_Lift Station Rehabilitation And Reconstruction (Pape Dawson)\6 Drawings\Instrumentation And Control\Working\Elmwood Hills\H8107_EH–I–11.dwg

FILE PATH: O:\H8107_Lift Station Rehabilitation And Reconstruction (Pape Dawson)\6 Drawings\Instrumentation And Control\Working\Elmwood Hills\H8107_EH-I-12.dwg

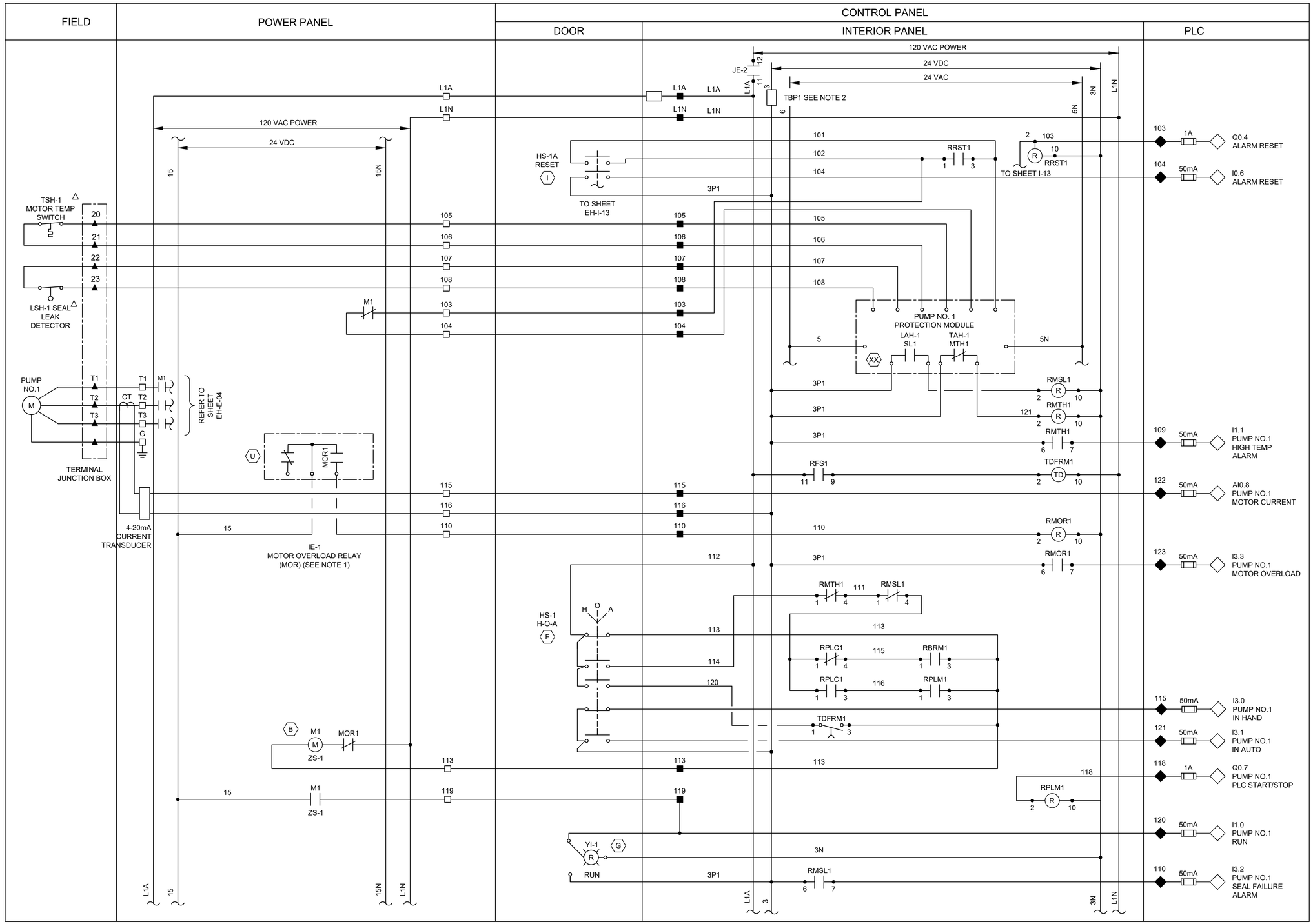

LEGEND

- △ DEVICE OR FIELD TERMINAL LOCATED AT MOTOR
- ✳ DEVICE OR FIELD TERMINAL LOCATED REMOTE
- □ DEVICE OR FIELD TERMINAL LOCATED AT MCC/POWER PANEL
- ■ FIELD TERMINAL LOCATED AT CONTROL PANEL
- ▲ REMOTE TERMINAL
- ● DEVICE TERMINAL NO.
- ◆ PLC INTERFACE TERMINAL

NO.	DATE	REVISION	APP.

NOTES:

1. MOTOR OVERLOAD RELAY OUTPUT CONTACT SHOWN IS NORMALLY CLOSED WHEN RELAY IS DE-ENERGIZED, OPEN WHEN ENERGIZED, AND CLOSED WHEN IN ALARM. VERIFY OPERATION OF RELAY PROVIDED AND ADJUST CONNECTION OF RMOR AUXILIARY RELAYS.
2. FUSED TERMINAL ON TERMINAL BLOCK TB4 SEE CONTROL POWER AND COMMUNICATION WIRING DIAGRAM DRAWING NO. EH-I-03.
3. ALL FLOAT CONTROL CIRCUIT WIRES COLOR SHALL BE YELLOW.

NOTICE:
FOR YOUR SAFETY, YOU ARE REQUIRED BY TEXAS LAW TO CALL 811 AT LEAST 48 HOURS BEFORE YOU DIG SO THAT UNDERGROUND LINES CAN BE MARKED. THIS SIGNATURE DOES NOT FULFILL YOUR OBLIGATION TO CALL 811

VERIFICATION OF PRIVATE UTILITY LINES

Date

CenterPoint Energy natural gas utilities shown. (Gas service lines are not shown). This signature not be used for conflict verification.

Signature valid for six months.

Date

CenterPoint Energy/UNDERGROUND Electrical Facilities Verification ONLY. (This signature verifies existing underground facilities – not to be used for conflict verification)

Signature valid for six months.

Date

Approved for AT&T underground conduit facilities only.
Signature valid for one year.

PAPE–DAWSON
2107 CITYWEST BLVD, 3RD FLR I HOUSTON, TX 77042 I 713.428.2400
TEXAS ENGINEERING FIRM #470 I TEXAS SURVEYING FIRM #10028800

GAI
Gupta & Associates, Inc.
CONSULTING ENGINEERING
Registration No. F-2593
302 Dennis St.
Houston, Texas 77006
Tel: 713-636-2936
Fax: 713-636-2987
email: hforouzan@guiconsulting.com

SURVEYED BY:
PAPE–DAWSON ENGINEERS
FB NO. 24–018

THIS DOCUMENT IS RELEASED FOR INTERIM REVIEW UNDER THE AUTHORIZATION OF HOSS FOROUZAN, P.E. (#77748) AND IS **NOT TO BE USED FOR CONSTRUCTION.**

CITY OF HOUSTON
HOUSTON PUBLIC WORKS

LIFT STATION REHABILITATION AND RECONSTRUCTION
BEN'S BRANCH, WOODLAND RIDGE, ELMWOOD HILLS, FOREST SHORES, TRAIL RIVER, RIVERLAWN

INSTRUMENTATION

ELMWOOD HILLS LIFT STATION PUMP NO.1 CONTROL PANEL WIRING DIAGRAM

WBS NUMBER	FOR CITY OF HOUSTON USE ONLY
R–000267–0180–3	
DRAWING SCALE	
AS NOTED	
CITY OF HOUSTON PM	
BRENDA JOHNSON P.E.	
SHEET NO. XX OF XX	

EH–I–12

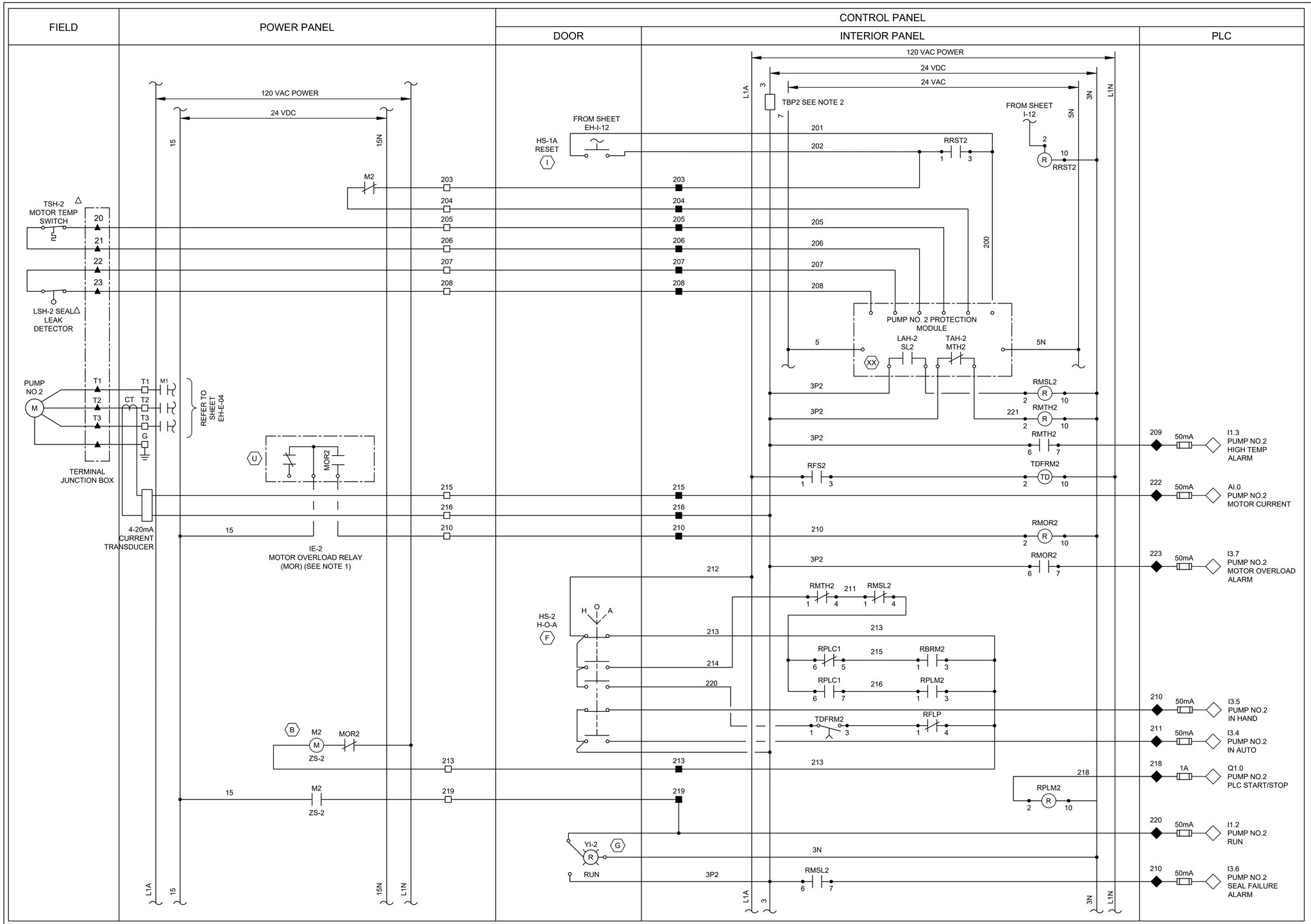

LEGEND

- △ DEVICE OR FIELD TERMINAL LOCATED AT MOTOR
- ✳ DEVICE OR FIELD TERMINAL LOCATED REMOTE
- □ DEVICE OR FIELD TERMINAL LOCATED AT MCC/POWER PANEL
- ■ FIELD TERMINAL LOCATED AT CONTROL PANEL
- ▲ REMOTE TERMINAL
- ● DEVICE TERMINAL NO.
- ◆ PLC INTERFACE TERMINAL

NOTES:

1. MOTOR OVERLOAD RELAY OUTPUT CONTACT SHOWN IS NORMALLY CLOSED WHEN RELAY IS DE-ENERGIZED, OPEN WHEN ENERGIZED, AND CLOSED WHEN IN ALARM. VERIFY OPERATION OF RELAY PROVIDED AND ADJUST CONNECTION OF RMOR AUXILIARY RELAYS.
2. FUSED TERMINAL ON TERMINAL BLOCK TB4 SEE CONTROL POWER AND COMMUNICATION WIRING DIAGRAM DRAWING NO. EH-I-03.
3. ALL FLOAT CONTROL CIRCUIT WIRES COLOR SHALL BE YELLOW.

NOTICE:
FOR YOUR SAFETY, YOU ARE REQUIRED BY TEXAS LAW TO CALL 811 AT LEAST 48 HOURS BEFORE YOU DIG SO THAT UNDERGROUND LINES CAN BE MARKED. THIS SIGNATURE DOES NOT FULFILL YOUR OBLIGATION TO CALL 811

VERIFICATION OF PRIVATE UTILITY LINES

Date

CenterPoint Energy natural gas utilities shown. (Gas service lines are not shown). This signature not be used for conflict verification.

Signature valid for six months.

Date

CenterPoint Energy/UNDERGROUND Electrical Facilities Verification ONLY. (This signature verifies existing underground facilities – not to be used for conflict verification)

Signature valid for six months.

Date

Approved for AT&T underground conduit facilities only. Signature valid for one year.

PAPE–DAWSON
2107 CITYWEST BLVD, 3RD FLR I HOUSTON, TX 77042 I 713.428.2400
TEXAS ENGINEERING FIRM #470 I TEXAS SURVEYING FIRM #10028800

GAI
Gupta & Associates, Inc.
CONSULTING ENGINEERING
Registration No. F-2593
302 Dennis St.
Houston, Texas 77006
Tel: 713-636-2936
Fax: 713-636-2987
email: hforouzan@gaiconsulting.com

THIS DOCUMENT IS RELEASED FOR INTERIM REVIEW UNDER THE AUTHORIZATION OF HOSS FOROUZAN, P.E. (#77748) AND IS **NOT TO BE USED FOR CONSTRUCTION.**

SURVEYED BY:
PAPE–DAWSON ENGINEERS
FB NO. 24–018

CITY OF HOUSTON
HOUSTON PUBLIC WORKS

LIFT STATION REHABILITATION AND RECONSTRUCTION
BEN'S BRANCH, WOODLAND RIDGE, ELMWOOD HILLS, FOREST SHORES, TRAIL RIVER, RIVERLAWN

INSTRUMENTATION

ELMWOOD HILLS LIFT STATION PUMP NO.2 CONTROL PANEL WIRING DIAGRAM

WBS NUMBER	FOR CITY OF HOUSTON USE ONLY
R–000267–0180–3	
DRAWING SCALE	
AS NOTED	
CITY OF HOUSTON PM	
BRENDA JOHNSON P.E.	
SHEET NO. XX OF XX	

EH–I–13

NO.	DATE	REVISION	APP.

FILE PATH: O:\H8107_Lift Station Rehabilitation And Reconstruction (Pape Dawson)\6 Drawings\Instrumentation And Control\Working\Elmwood Hills\H8107_EH–I–13.dwg

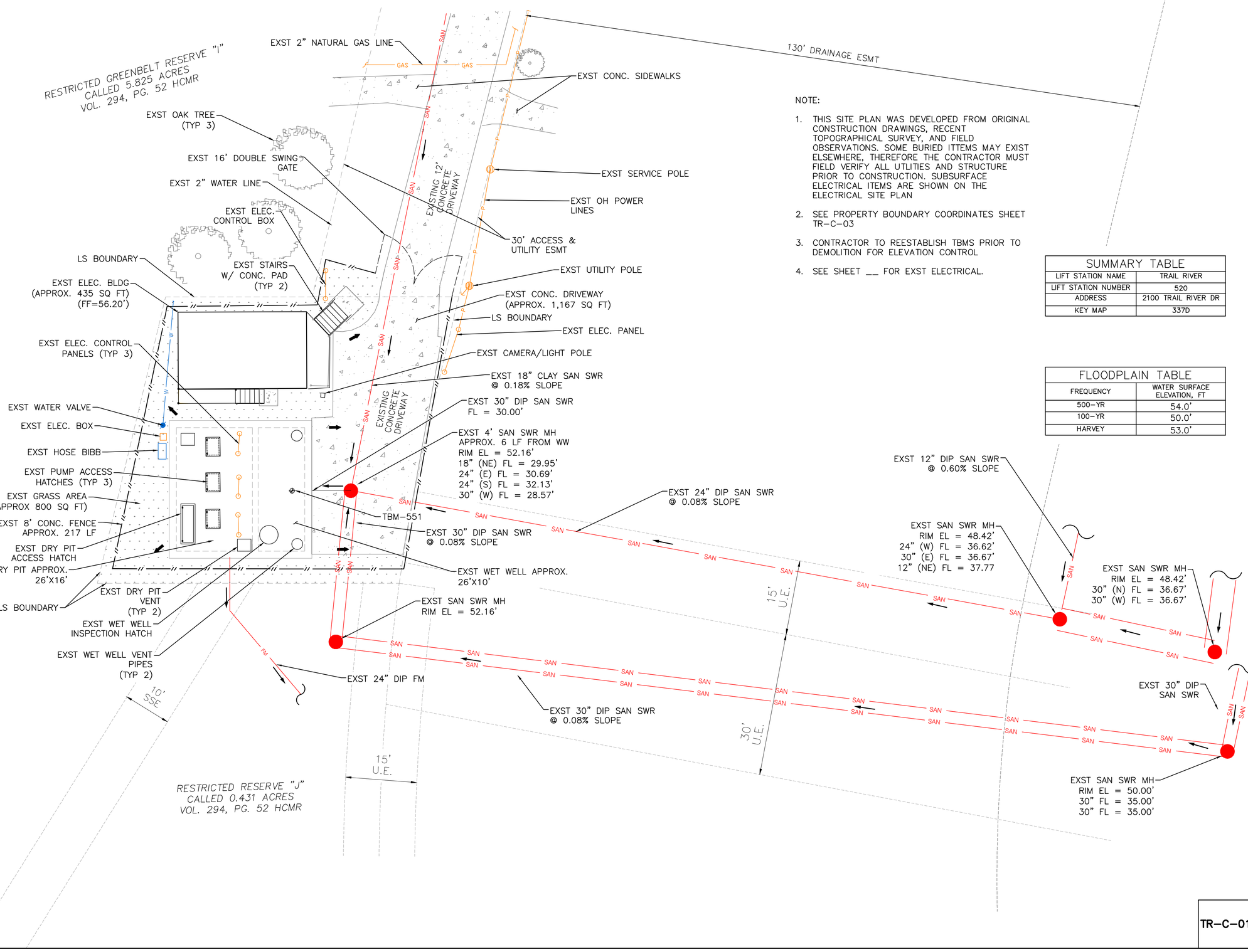

NOTE:

1. THIS SITE PLAN WAS DEVELOPED FROM ORIGINAL CONSTRUCTION DRAWINGS, RECENT TOPOGRAPHICAL SURVEY, AND FIELD OBSERVATIONS. SOME BURIED ITTEMS MAY EXIST ELSEWHERE, THEREFORE THE CONTRACTOR MUST FIELD VERIFY ALL UTLITIES AND STRUCTURE PRIOR TO CONSTRUCTION. SUBSURFACE ELECTRICAL ITEMS ARE SHOWN ON THE ELECTRICAL SITE PLAN
2. SEE PROPERTY BOUNDARY COORDINATES SHEET TR-C-03
3. CONTRACTOR TO REESTABLISH TBMS PRIOR TO DEMOLITION FOR ELEVATION CONTROL
4. SEE SHEET __ FOR EXST ELECTRICAL.

SUMMARY TABLE	
LIFT STATION NAME	TRAIL RIVER
LIFT STATION NUMBER	520
ADDRESS	2100 TRAIL RIVER DR
KEY MAP	337D

FLOODPLAIN TABLE	
FREQUENCY	WATER SURFACE ELEVATION, FT
500-YR	54.0'
100-YR	50.0'
HARVEY	53.0'

TEMPORARY BENCHMARK DESCRIPTION

TBM-550 CUT "X" IN CONCRETE DRIVEWAY – ELEVATION 52.69'
TBM-551 CUT "X" IN CONCRETE PAD – ELEVATION 52.96'

LEGEND

- DRAINAGE DIRECTION
- FLOW DIRECTION
- EXISTING PAVEMENT
- EXISTING GRASS AREA

SCALE: 1"= 10'
0' 10' 20' 30'

NO.	DATE	REVISION	APP.

NOTICE:
FOR YOUR SAFETY, YOU ARE REQUIRED BY TEXAS LAW TO CALL 811 AT LEAST 48 HOURS BEFORE YOU DIG SO THAT UNDERGROUND LINES CAN BE MARKED. THIS SIGNATURE DOES NOT FULFILL YOUR OBLIGATION TO CALL 811

VERIFICATION OF PRIVATE UTILITY LINES

Date

CenterPoint Energy natural gas utilities shown. (Gas service lines are not shown). This signature not be used for conflict verification.
Signature valid for six months.

Date

CenterPoint Energy/UNDERGROUND Electrical Facilities Verification ONLY. (This signature verifies existing underground facilities – not to be used for conflict verification)
Signature valid for six months.

Date

Approved for AT&T underground conduit facilities only.
Signature valid for one year.

PAPE-DAWSON
2107 CITYWEST BLVD, 3RD FLR I HOUSTON, TX 77042 I 713.428.2400
TEXAS ENGINEERING FIRM #470 I TEXAS SURVEYING FIRM #10028800

PAPE-DAWSON
2107 CITYWEST BOULEVARD
3RD FLR
HOUSTON, TEXAS 77402
713-428-2400
TX FIRM #470

SURVEYED BY:
PAPE-DAWSON
FB NO. 24-018

THIS DOCUMENT IS RELEASED FOR INTERIM REVIEW UNDER THE AUTHORIZATION OF AMIRHOSSEIN SHOKOUHI, P.E. (#139835) AND IS **NOT TO BE USED FOR CONSTRUCTION.**

CITY OF HOUSTON
HOUSTON PUBLIC WORKS

LIFT STATION REHABILITATION AND RECONSTRUCTION
BEN'S BRANCH, WOODLAND RIDGE, ELMWOOD HILLS, FOREST SHORES, TRAIL RIVER, RIVERLAWN

CIVIL

TRAIL RIVER LIFT STATION EXISTING SITE PLAN & YARD PIPING

WBS NUMBER	FOR CITY OF HOUSTON USE ONLY
R-000267-0180-3	
DRAWING SCALE	
AS NOTED	
CITY OF HOUSTON PM	
BRENDA JOHNSON P.E.	
SHEET NO. 197 OF 338	

TR-C-01

FILE PATH: K:\Projects\423\77 COH LS Package\00\03 CADD\Plans\Sheets\06 Trail River\TR Existing Site Plan & Yard Piping.dwg

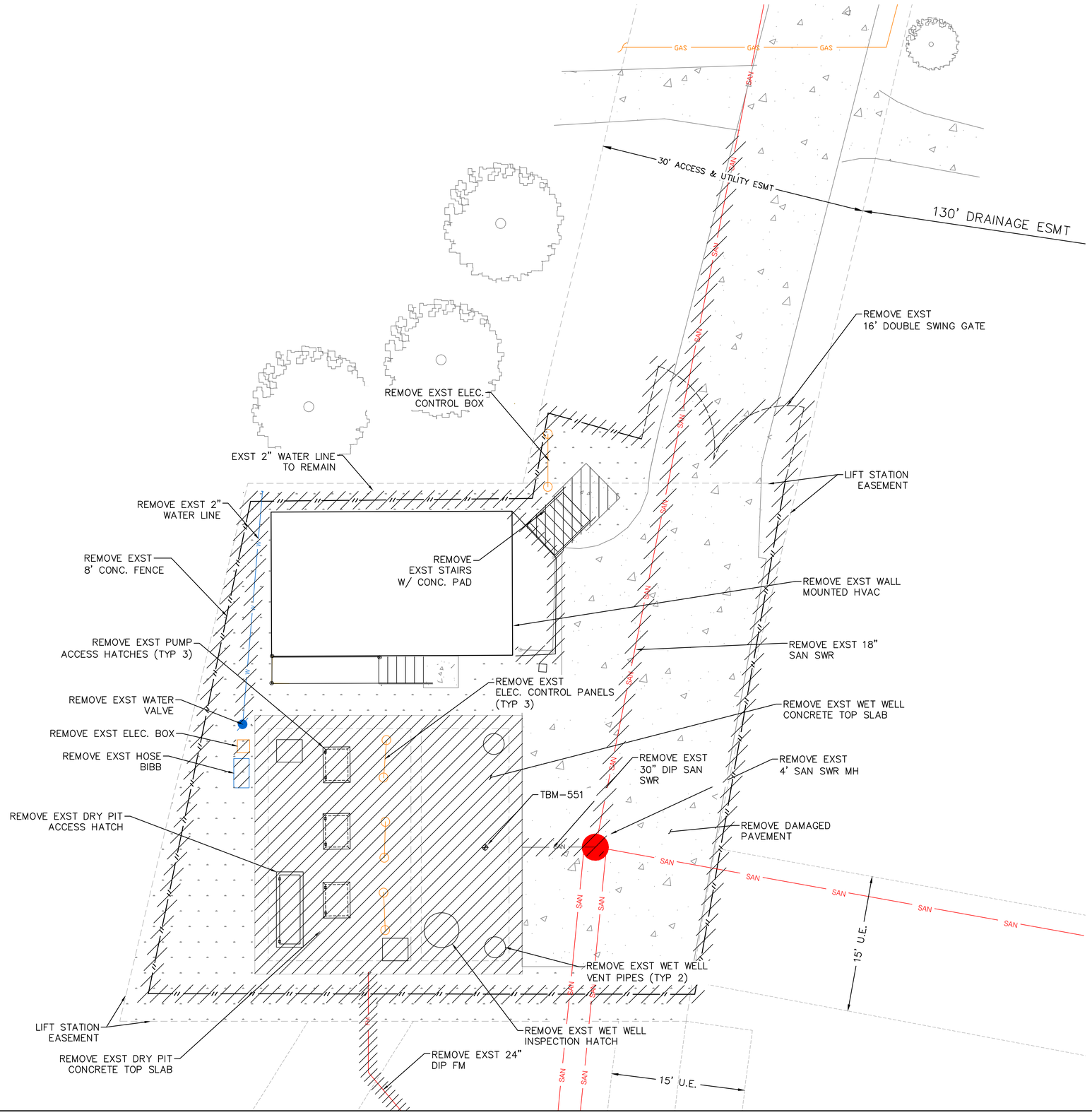
GAS
GAS
GAS
SAN
SAN
SAN

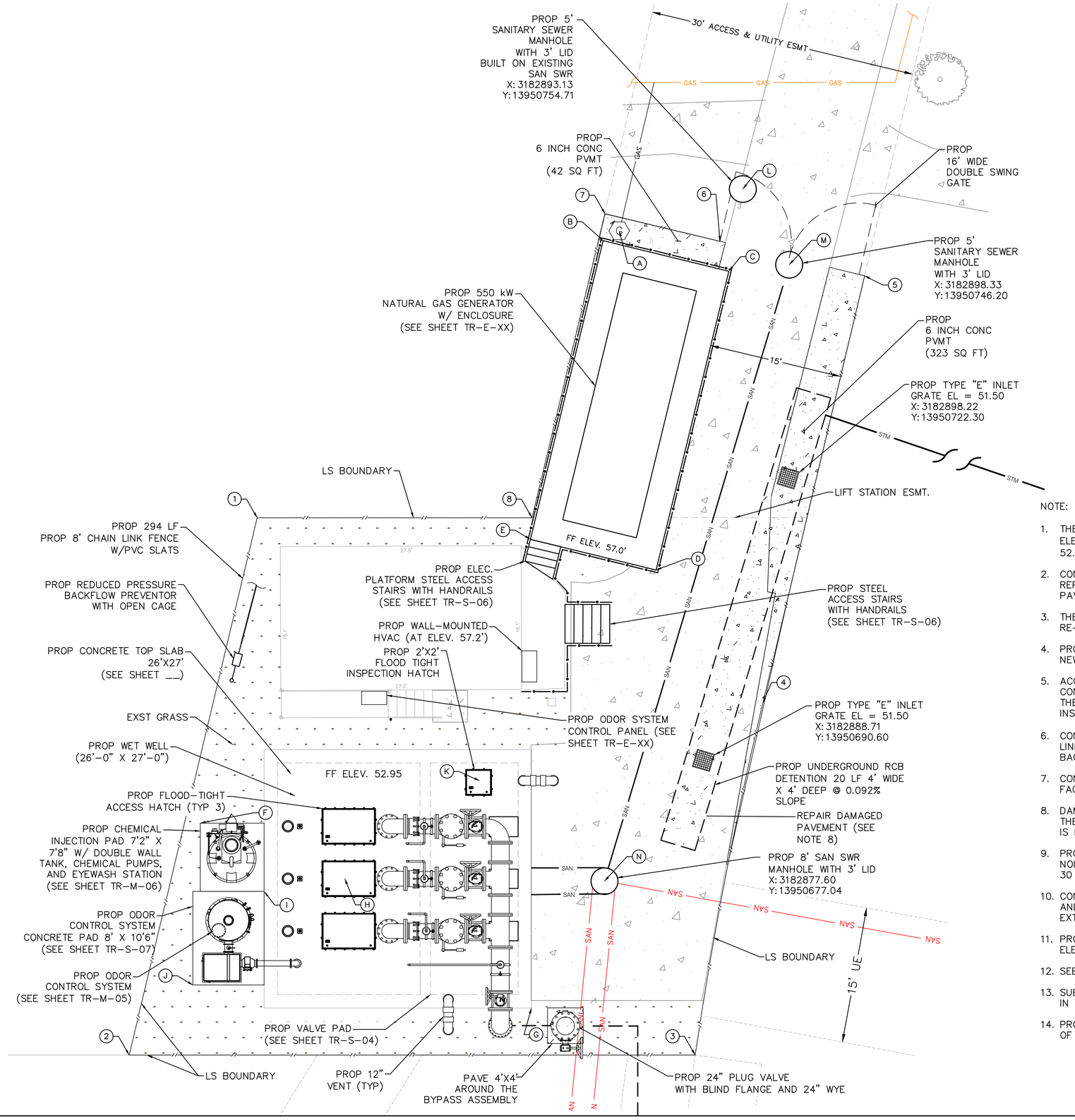

PROPERTY COORDINATION				
POINT #	PROPOSED ELEVATIONS	EXIST ELEVATION	NORTHING	EASTING
1	51.08	51.08	13950717.82	3182838.65
2	51.77	51.77	13950657.54	3182824.29
3	51.71	51.71	13950657.54	3182887.79
4	51.89	51.89	13950697.05	3182895.38
5	51.91	51.91	13950744.98	3182906.80
6	52.01	52.01	13950748.85	3182890.57
7	50.94	50.94	13950751.92	3182877.67
8	51.27	51.27	13950717.82	3182869.48

STRUCTURE COORDINATION				
POINT #	PROPOSED ELEVATIONS	EXIST ELEVATION	NORTHING	EASTING
A	50.83	50.83	13950750.03	3182879.27
B	50.77	50.77	13950748.92	3182877.47
C	52.04	52.04	13950745.48	3182891.56
D	51.98	51.98	13950711.96	3182883.40
E	51.43	51.43	13950715.40	3182869.31
F	52.42	52.42	13950683.56	3182832.26
G	51.90	51.90	13950662.82	3182869.43
H	52.95	52.95	13950677.32	3182846.89
I	52.42	52.42	13950675.90	3182839.43
J	50.40	50.40	13950665.40	3182831.43
K	52.95	52.95	13950688.32	3182863.01
L	51.51	51.51	13950754.71	3182893.13
M	51.94	51.94	13950746.20	3182898.33
N	52.02	52.02	13950677.04	3182877.60

NOTE:

1. THE ELEVATED ELECTRICAL/GENERATOR TO BE INSTALLED AT ELEVATION OF 57.0' (4.7 FT HIGHER THAN GROUND ELEVATION OF 52.3').
2. CONTRACTOR SHALL BE RESPONSIBLE FOR REPAIRING AND REPAVING ANY PORTION OF CONCRETE ACCESS ROAD AND PAVING.
3. THE PROP WET WELL INTERIOR WALLS AND CEILING TO BE RE-COATED WITH COH WWO APPROVED MATERIAL.
4. PROP WET WELL TOP SLAB TO BE REPLACED TO ACCOMMODATE NEW OPENINGS AND FLOOD TIGHT ACCESS HATCHES.
5. ACCORDING TO THE SURVEY, THE EXISTING FENCE IS CONSTRUCTED SLIGHTLY OUTSIDE THE LIFT STATION BOUNDARY. THE NEW FENCE LOCATION TO BE ADJUSTED ACCORDINGLY AND INSTALLED AT THE LIFT STATION BOUNDARY.
6. CONTRACTOR TO LOCATE THE EXISTING 3/4" POTABLE WATER LINE ENTRANCE TO THE SITE AND CONNECT TO THE PROP BACKFLOW PREVENTOR.
7. CONTRACTOR TO EXTEND THE POTABLE WATER LINE INSIDE THE FACILITY AND CONNECT TO THE PROP EYEWASH STATION.
8. DAMAGED PAVEMENT NEAR THE WET WELL TO BE REPAIRED AT THE SAME GRADE AND ELEVATION. NO UNDERGROUND DETENTION IS REQUIRED.
9. PROP GENERATOR FOR EMERGENCY AND TESTING USE ONLY. NOISE AND SOUND REGULATION IN CODE COMPLIANCE CHAPTER 30 NOT APPLICABLE.
10. CONTRACTOR TO FIELD VERIFY THE EXISTING NATURAL GAS LINE AND TAP THE PROP NATURAL GAS LINE TO THE EXISTING LINE, EXTEND TO THE FACILITY AND CONNECT TO THE GAS METER
11. PROP NATURAL GAS LINE TO BE INSTALLED 3FT BELOW GROUND ELEVATION.
12. SEE SHEET C4 FOR YARD PIPING DETAIL.
13. SUBSURFACE DRAINAGE SYSTEMS ARE REQUIRED TO BE DRAINED IN 48 HOURS.
14. PROP UNDERGROUND DETENTION BOX TO BE MAINTAINED BY CITY OF HOUSTON WASTEWATER OPERATIONS

TEMPORARY BENCHMARK DESCRIPTION

TBM-550 CUT "X" IN CONCRETE DRIVEWAY – ELEVATION 52.69'
TBM-551 CUT "X" IN CONCRETE PAD – ELEVATION 52.96'

LEGEND

EXISTING PAVEMENT

EXISTING GRASS AREA

PROPOSED PAVEMENT

NO.	DATE	REVISION	APP.

SCALE: 1"= 8'

0' 8' 16' 24'

NOTICE:
FOR YOUR SAFETY, YOU ARE REQUIRED BY TEXAS LAW TO CALL 811 AT LEAST 48 HOURS BEFORE YOU DIG SO THAT UNDERGROUND LINES CAN BE MARKED. THIS SIGNATURE DOES NOT FULFILL YOUR OBLIGATION TO CALL 811

VERIFICATION OF PRIVATE UTILITY LINES

Date

CenterPoint Energy natural gas utilities shown. (Gas service lines are not shown). This signature not be used for conflict verification.

Signature valid for six months.

Date

CenterPoint Energy/UNDERGROUND Electrical Facilities Verification ONLY. (This signature verifies existing underground facilities – not to be used for conflict verification)

Signature valid for six months.

Date

Approved for AT&T underground conduit facilities only.
Signature valid for one year.

PAPE-DAWSON
2107 CITYWEST BLVD, 3RD FLR I HOUSTON, TX 77042 I 713.428.2400
TEXAS ENGINEERING FIRM #470 I TEXAS SURVEYING FIRM #10028800

PAPE-DAWSON
2107 CITYWEST BOULEVARD
3RD FLR
HOUSTON, TEXAS 77402
713-428-2400
TX FIRM #470

SURVEYED BY:
PAPE-DAWSON
FB NO. 24-018

THIS DOCUMENT IS RELEASED FOR INTERIM REVIEW UNDER THE AUTHORIZATION OF AMIRHOSSEIN SHOKOUHI, P.E. (#139835) AND IS **NOT TO BE USED FOR CONSTRUCTION.**

CITY OF HOUSTON
HOUSTON PUBLIC WORKS

LIFT STATION REHABILITATION AND RECONSTRUCTION
BEN'S BRANCH, WOODLAND RIDGE, ELMWOOD HILLS, FOREST SHORES, TRAIL RIVER, RIVERLAWN

CIVIL

TRAIL RIVER LIFT STATION PROPOSED SITE PLAN

WBS NUMBER	FOR CITY OF HOUSTON USE ONLY
R-000267-0180-3	
DRAWING SCALE	
AS NOTED	
CITY OF HOUSTON PM	
BRENDA JOHNSON P.E.	
SHEET NO. 199 OF 338	

TR-C-03

FILE PATH: K:\Projects\423\77 COH LS Package\00\03 CADD\Plans\Sheets\06 Trail River\LAYOUT-C-4237700.dwg

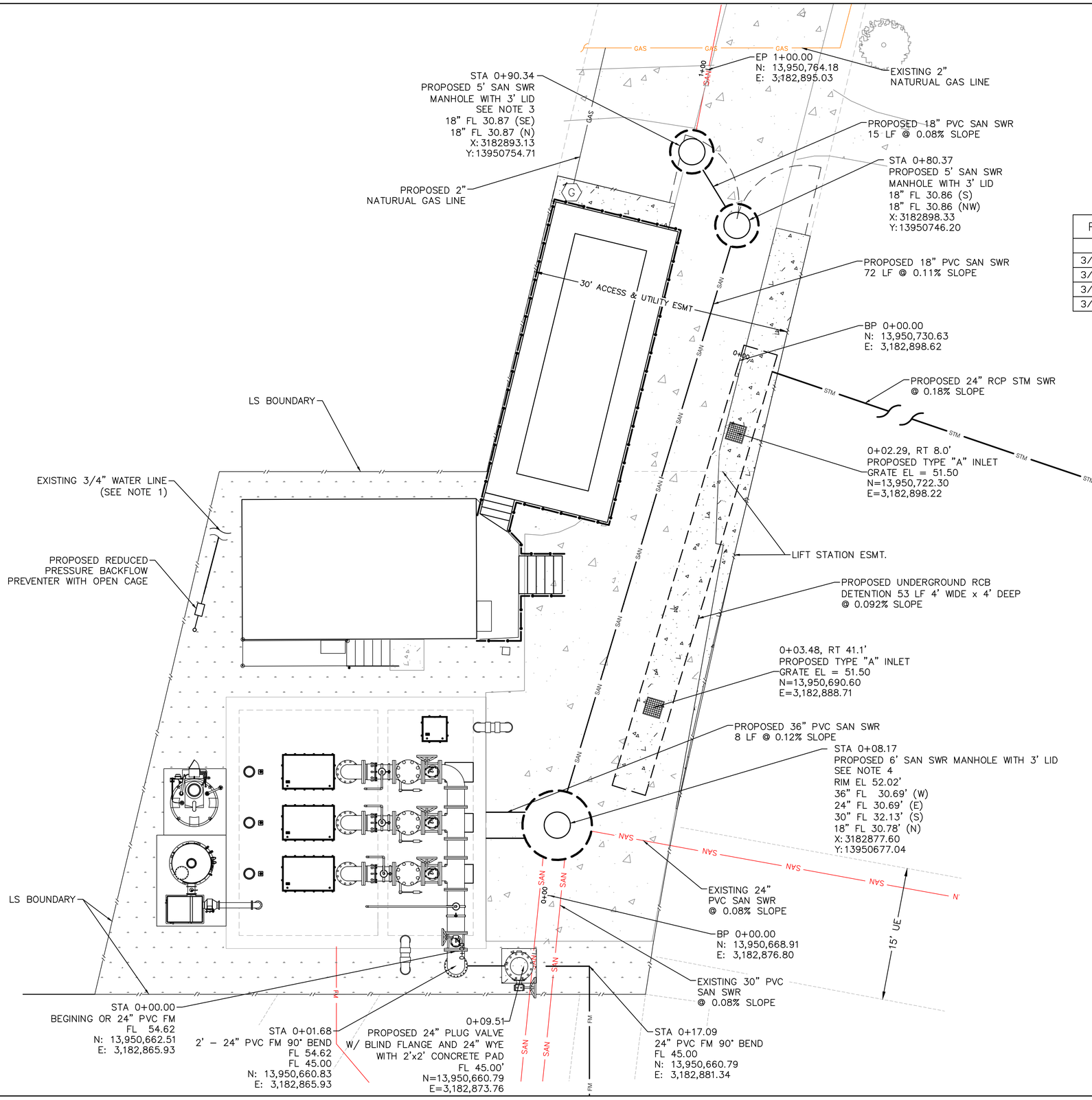

PROPOSED WATER LINE PIPE SCHEDULE		
SIZE	MATERIAL	FITTING
3/4 INCH	SCH 40 G.S.	STRAIGHT PIPE
3/4 INCH	SCH 40 G.S.	BACKFLOW PREVENTER
3/4 INCH	SCH 40 G.S.	STRAIGHT PIPE
3/4 INCH	SCH 40 G.S.	HOSE BIBB

NOTE:

1. CONTRACTOR TO LOCATE THE EXISTING ¾" POTABLE WATER LINE ENTRANCE TO THE SITE AND CONNECT TO THE PROPOSED BACKFLOW PREVENTOR.
2. CONTRACTOR TO LOCATE EXISTING 24" DI FM OUTSIDE THE FENCE AND CONNECT TO PROPOSED FM.
3. CONTRACTOR TO LOCATE EXISTING 18" CLAY SANITARY SEWER OUTSIDE THE FENCE AT STA 0+90.34 AND CONNECT TO THE PROPOSED 5' SANITARY MANHOLE.
4. CONTRACTOR TO LOCATE EXISTING 24" AND 30" DI SANITARY SEWER INSIDE THE FENCE AT STA 0+08.17 AND CONNECT TO THE PROPOSED 6' SANITARY MANHOLE.
5. MINIMUM 4 FT HORIZONTAL CLEARANCE TO BE PROVIDED BETWEEN THE PROPOSED UNDERGROUND DETENTION BOX AND SANITARY SEWERS.
6. DAMAGED PAVEMENT NEAR THE WET WELL TO BE REPAIRED AT THE SAME GRADE AND ELEVATION. NO UNDERGROUND DETENTION IS REQUIRED.
7. PROPOSED PAVEMENT AT THE SAME GRADE AND ELEVATION AS EXISTING PAVEMENT.
8. STORMWATER DETENTION BOXES TO BE MAINTAINED BY THE CITY OF HOUSTON PUBLIC WORKS WASTEWATER OPERATIONS.
9. SUBSURFACE DRAINAGE SYSTEMS ARE REQUIRED TO BE DRAINED IN 48 HOURS.
10. CONTRACTOR TO FIELD VERIFY THE EXISTING NATURAL GAS LINE AND TAP THE PROPOSED NATURAL GAS LINE TO THE EXISTING LINE, EXTEND TO THE FACILITY AND CONNECT TO THE GAS METER.
11. PROPOSED NATURAL GAS LINE TO BE INSTALLED 3 FT BELOW GROUND ELEVATION.

TEMPORARY BENCHMARK DESCRIPTION

TBM-550 CUT "X" IN CONCRETE DRIVEWAY – ELEVATION 52.69'
TBM-551 CUT "X" IN CONCRETE PAD – ELEVATION 52.96'

LEGEND

EXISTING PAVEMENT

EXISTING GRASS AREA

PROPOSED PAVEMENT

SCALE: 1"= 6'

0' 6' 12' 18'

NO.	DATE	REVISION	APP.

NOTICE:
FOR YOUR SAFETY, YOU ARE REQUIRED BY TEXAS LAW TO CALL 811 AT LEAST 48 HOURS BEFORE YOU DIG SO THAT UNDERGROUND LINES CAN BE MARKED. THIS SIGNATURE DOES NOT FULFILL YOUR OBLIGATION TO CALL 811

VERIFICATION OF PRIVATE UTILITY LINES

Date

CenterPoint Energy natural gas utilities shown. (Gas service lines are not shown). This signature not be used for conflict verification.

Signature valid for six months.

Date

CenterPoint Energy/UNDERGROUND Electrical Facilities Verification ONLY. (This signature verifies existing underground facilities – not to be used for conflict verification)

Signature valid for six months.

Date

Approved for AT&T underground conduit facilities only.
Signature valid for one year.

PAPE-DAWSON
2107 CITYWEST BLVD, 3RD FLR I HOUSTON, TX 77042 I 713.428.2400
TEXAS ENGINEERING FIRM #470 I TEXAS SURVEYING FIRM #10028800

PAPE-DAWSON
2107 CITYWEST BOULEVARD
3RD FLR
HOUSTON, TEXAS 77402
713-428-2400
TX FIRM #470

SURVEYED BY:
PAPE-DAWSON
FB NO. 24-018

THIS DOCUMENT IS RELEASED FOR INTERIM REVIEW UNDER THE AUTHORIZATION OF AMIRHOSSEIN SHOKOUHI, P.E. (#139835) AND IS **NOT TO BE USED FOR CONSTRUCTION.**

CITY OF HOUSTON
HOUSTON PUBLIC WORKS

LIFT STATION REHABILITATION AND RECONSTRUCTION
BEN'S BRANCH, WOODLAND RIDGE, ELMWOOD HILLS, FOREST SHORES, TRAIL RIVER, RIVERLAWN

CIVIL

TRAIL RIVER LIFT STATION PROPOSED YARD PIPING PLAN

WBS NUMBER	FOR CITY OF HOUSTON USE ONLY
R-000267-0180-3	
DRAWING SCALE	
AS NOTED	
CITY OF HOUSTON PM	
BRENDA JOHNSON P.E.	
SHEET NO. 200 OF 338	

TR-C-04

FILE PATH: K:\Projects\423\77 COH LS Package\00\03 CADD\Plans\Sheets\06 Trail River\PYPP-C-4237700.dwg

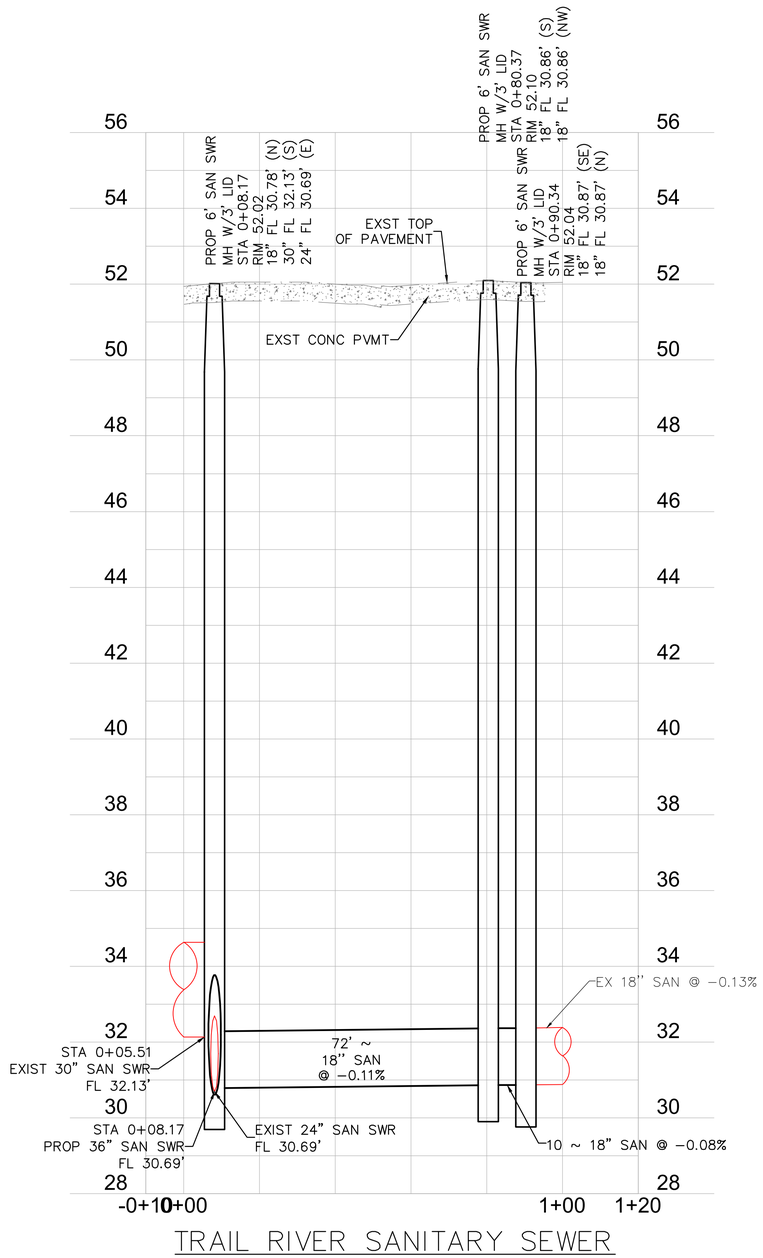

TRAIL RIVER SANITARY SEWER

NO.	DATE	REVISION	APP.

SCALE: 1"= 2'

0' 2' 4' 6'

NOTICE:
FOR YOUR SAFETY, YOU ARE REQUIRED BY TEXAS LAW TO CALL 811 AT LEAST 48 HOURS BEFORE YOU DIG SO THAT UNDERGROUND LINES CAN BE MARKED. THIS SIGNATURE DOES NOT FULFILL YOUR OBLIGATION TO CALL 811

VERIFICATION OF PRIVATE UTILITY LINES

Date

CenterPoint Energy natural gas utilities shown. (Gas service lines are not shown). This signature not be used for conflict verification.

Signature valid for six months.

Date

CenterPoint Energy/UNDERGROUND Electrical Facilities Verification ONLY. (This signature verifies existing underground facilities – not to be used for conflict verification)

Signature valid for six months.

Date

Approved for AT&T underground conduit facilities only.
Signature valid for one year.

PAPE–DAWSON
2107 CITYWEST BLVD, 3RD FLR I HOUSTON, TX 77042 I 713.428.2400
TEXAS ENGINEERING FIRM #470 I TEXAS SURVEYING FIRM #10028800

PAPE–DAWSON
2107 CITYWEST BOULEVARD
3RD FLR
HOUSTON, TEXAS 77402
713–428–2400
TX FIRM #470

SURVEYED BY:
PAPE–DAWSON
FB NO. 24–018

THIS DOCUMENT IS RELEASED FOR INTERIM REVIEW UNDER THE AUTHORIZATION OF AMIRHOSSEIN SHOKOUHI, P.E. (#139835) AND IS **NOT TO BE USED FOR CONSTRUCTION.**

CITY OF HOUSTON
HOUSTON PUBLIC WORKS

LIFT STATION REHABILITATION AND RECONSTRUCTION
BEN'S BRANCH, WOODLAND RIDGE, ELMWOOD HILLS, FOREST SHORES, TRAIL RIVER, RIVERLAWN

CIVIL

TRAIL RIVER LIFT STATION
PROPOSED SANITARY PROFILE

WBS NUMBER	FOR CITY OF HOUSTON USE ONLY
R–000267–0180–3	
DRAWING SCALE	
AS NOTED	
CITY OF HOUSTON PM	
BRENDA JOHNSON P.E.	
SHEET NO. 201 OF 338	

TR–C–05

FILE PATH: K:\Projects\423\77 COH LS Package\00\03 CADD\Plans\Sheets\06 Trail River\PYP PROF–C–4237700.dwg

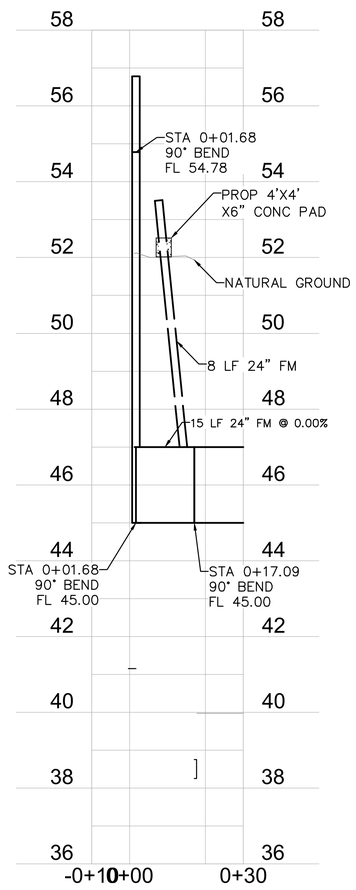

TRAIL RIVER 24 INCH FM

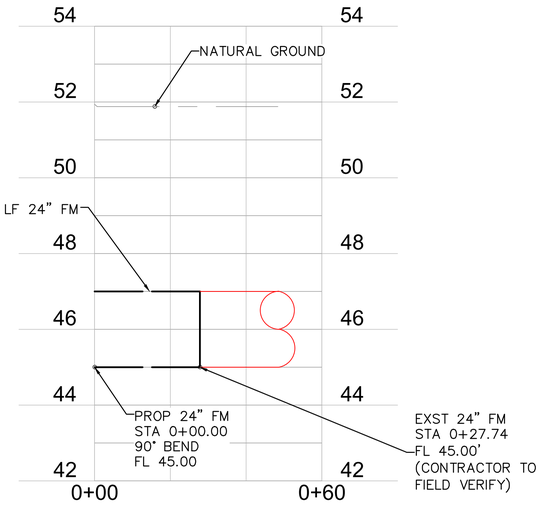

24 INCH FM

NO.	DATE	REVISION	APP.

SCALE: 1"= 2'

0' 2' 4' 6'

NOTICE:
FOR YOUR SAFETY, YOU ARE REQUIRED BY TEXAS LAW TO CALL 811 AT LEAST 48 HOURS BEFORE YOU DIG SO THAT UNDERGROUND LINES CAN BE MARKED. THIS SIGNATURE DOES NOT FULFILL YOUR OBLIGATION TO CALL 811

VERIFICATION OF PRIVATE UTILITY LINES

Date

CenterPoint Energy natural gas utilities shown. (Gas service lines are not shown). This signature not be used for conflict verification.

Signature valid for six months.

Date

CenterPoint Energy/UNDERGROUND Electrical Facilities Verification ONLY. (This signature verifies existing underground facilities – not to be used for conflict verification)

Signature valid for six months.

Date

Approved for AT&T underground conduit facilities only.
Signature valid for one year.

PAPE–DAWSON
2107 CITYWEST BLVD, 3RD FLR I HOUSTON, TX 77042 I 713.428.2400
TEXAS ENGINEERING FIRM #470 I TEXAS SURVEYING FIRM #10028800

PAPE–DAWSON
2107 CITYWEST BOULEVARD
3RD FLR
HOUSTON, TEXAS 77402
713–428–2400
TX FIRM #470

SURVEYED BY:
PAPE–DAWSON
FB NO. 24–018

THIS DOCUMENT IS RELEASED FOR INTERIM REVIEW UNDER THE AUTHORIZATION OF AMIRHOSSEIN SHOKOUHI, P.E. (#139835) AND IS **NOT TO BE USED FOR CONSTRUCTION.**

CITY OF HOUSTON
HOUSTON PUBLIC WORKS

LIFT STATION REHABILITATION AND RECONSTRUCTION
BEN'S BRANCH, WOODLAND RIDGE, ELMWOOD HILLS, FOREST SHORES, TRAIL RIVER, RIVERLAWN

CIVIL

TRAIL RIVER LIFT STATION PROPOSED 24 INCH FM PROFILE

WBS NUMBER	FOR CITY OF HOUSTON USE ONLY
R–000267–0180–3	
DRAWING SCALE	
AS NOTED	
CITY OF HOUSTON PM	
BRENDA JOHNSON P.E.	
SHEET NO. 202 OF 338	

TR–C–06

FILE PATH: K:\Projects\423\77 COH LS Package\00\03 CADD\Plans\Sheets\06 Trail River\PYP PROF-C-4237700.dwg

PD will finalize the Paving and Grading sheet, including the elevations in 90% deliverable.

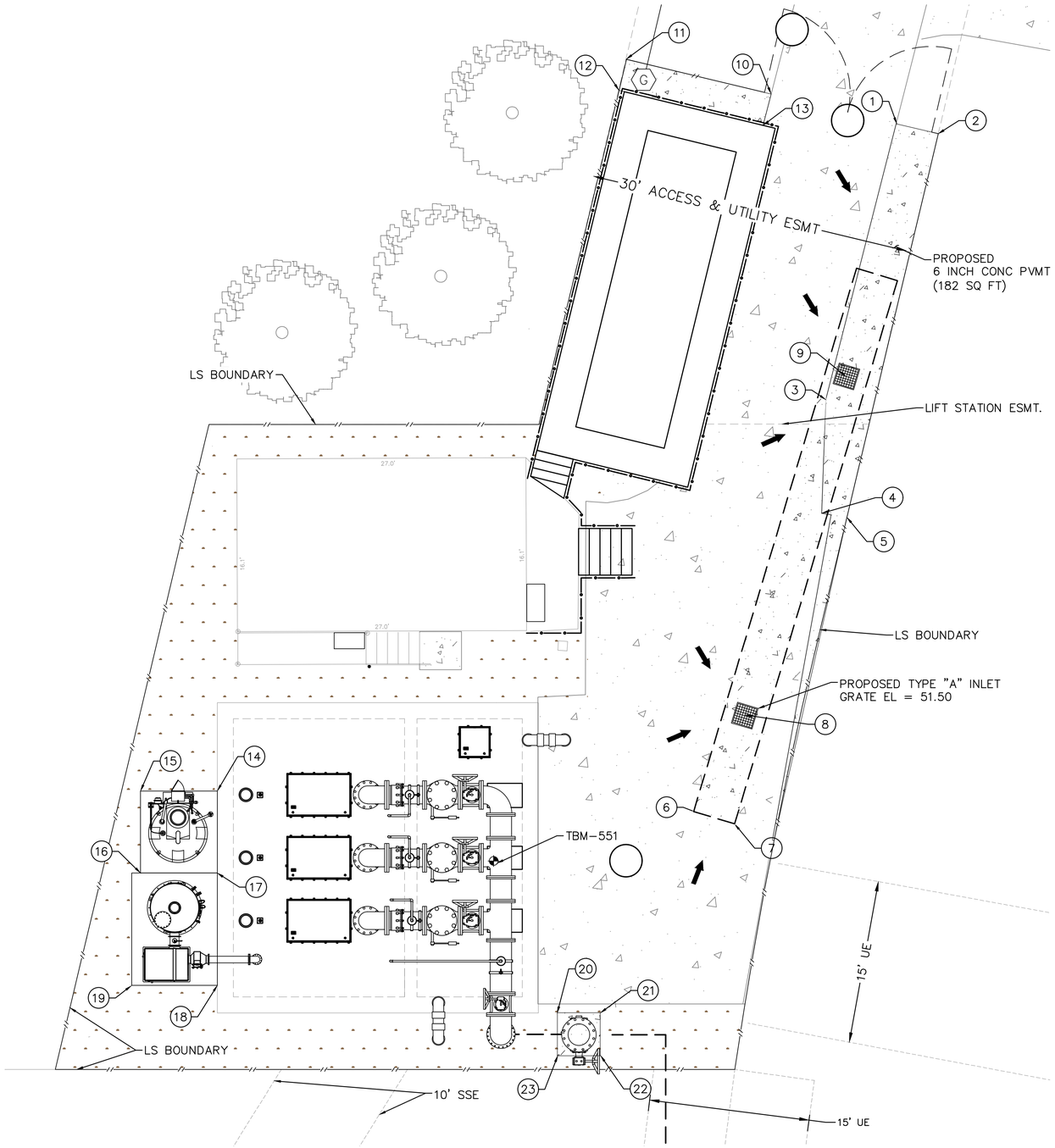

PAVEMENT COORDINATION				
POINT #	FINISH GRADE	NATURAL GROUND	NORTHING	EASTING
1	52.03	52.03	13950745.90	3182902.92
2	51.83	51.83	13950744.98	3182906.80
3	51.93	51.93	13950720.14	3182896.29
4	51.96	51.96	13950709.52	3182895.90
5	51.96	51.96	13950709.13	3182898.26
6	52.00	52.00	13950681.65	3182883.95
7	51.97	51.97	13950680.48	3182887.78
8	51.50	51.50	13950690.67	3182888.75
9	51.50	51.50	13950722.30	3182898.19
10	52.00	52.00	13950748.70	3182891.18
11	50.69	50.69	13950751.92	3182877.67
12	50.74	50.74	13950749.04	3182876.98
13	51.99	51.99	13950745.76	3182890.43
14	51.93	51.93	13950683.56	3182839.43
15	51.90	51.90	13950683.56	3182832.26
16	51.85	51.85	13950675.90	3182832.26
17	52.42	52.42	13950675.90	3182839.43
18	51.88	51.88	13950665.40	3182839.43
19	51.79	51.79	13950665.40	3182831.43
20	51.90	51.90	13950662.83	3182871.21
21	51.92	51.92	13950662.83	3182875.21
22	52.05	52.05	13950658.83	3182875.21
23	52.12	52.12	13950658.83	3182871.21

NOTES:

1. THE CONTRACTOR SHALL BE FULLY RESPONSIBLE FOR ANY DAMAGES TO EXISTING WATER, WASTEWATER, STORM WATER LINES AND TRAFFIC CONTROL DEVICES. ALL DAMAGES SHALL BE IN ACCORDANCE WITH THE "STANDARD CONSTRUCTION SPECIFICATIONS" REFERENCED ABOVE, AT NO COST TO THE CITY OF HOUSTON.
2. ADEQUATE DRAINAGE SHALL BE MAINTAINED AT ALL TIMES DURING CONSTRUCTION AND ANY DRAINAGE DITCH OR STRUCTURE DISTURBED DURING CONSTRUCTION SHALL BE RESTORED TO THE SATISFACTION OF THE OWNING AUTHORITY.
3. CONTRACTOR SHALL TAKE NECESSARY PRECAUTIONS TO PROTECT ROOT SYSTEMS OF SHRUBS, PLANTS, AND TREES ALONG THE AREA OF EXCAVATION.
4. THE CONTRACTOR SHALL COMPLY WITH THE LATEST EDITION OF OSHA REGULATIONS AND THE STATE OF TEXAS LAWS CONCERNING EXCAVATION.
5. REFER TO TOPOGRAPHIC SURVEY DRAWING FOR PROPERTY LINES BEARING AND DISTANCE.
6. CONTRACTOR TO COORDINATE OF LAYDOWN AREA WITH OWNER.
7. DAMAGED PAVEMENT NEAR THE WET WELL TO BE REPAIRED AT THE SAME GRADE AND ELEVATION. NO UNDERGROUND DETENTION IS REQUIRED.
8. PROPOSED PAVEMENT SHALL BE PLACED AT THE SAME GRADE AND ELEVATION AS EXISTING PAVEMENT.
9. AREA UNDER ELECTRICAL PLATFORM TO BE PAVED AND GRADED TOWARDS ON-SITE INLET.

PROPOSED PAVEMENT			
ITEM	LOCATION	ACTION	SQUARE FOOTAGE
SITE PAVEMENT	INSIDE PROPERTY BOUNDARY	ADDING CONCRETE UNDER/AROUND PLATFORM	±500
ACCESS DRIVEWAY/ DRIVEWAY APRON	INSIDE PROPERTY BOUNDARY	ADDING CONCRETE PAVEMENT ON EXISTING GRASS AREA	±152.67
DETENTION BOX	INSIDE PROPERTY BOUNDARY	ADDING CONCRETE PAVEMENT ON TOP OF DETENTION BOX	±212.00
CONCRETE PAD	INSIDE PROPERTY BOUNDARY	ADDING CONCRETE PAD FOR ODOR CONTROL SYSTEM	±84
CONCRETE PAD	INSIDE PROPERTY BOUNDARY	ADDING CONCRETE PAD FOR CHEMICAL INJECTION	±54.95
CONCRETE PAD	INSIDE PROPERTY BOUNDARY	ADDING CONCRET PAD FOR FORCE MAIN BYPASS	±16

TEMPORARY BENCHMARK DESCRIPTION

TBM-550 CUT "X" IN CONCRETE DRIVEWAY – ELEVATION 52.69'
TBM-551 CUT "X" IN CONCRETE PAD – ELEVATION 52.96'

LEGEND

- DRAINAGE DIRECTION
- PROPOSED CONCRETE PAVEMENT
- EXISTING PAVEMENT
- EXISTING GRASS AREA

SCALE: 1"= 6'

0' 6' 12' 18'

NO.	DATE	REVISION	APP.

NOTICE:
FOR YOUR SAFETY, YOU ARE REQUIRED BY TEXAS LAW TO CALL 811 AT LEAST 48 HOURS BEFORE YOU DIG SO THAT UNDERGROUND LINES CAN BE MARKED. THIS SIGNATURE DOES NOT FULFILL YOUR OBLIGATION TO CALL 811

VERIFICATION OF PRIVATE UTILITY LINES

Date

CenterPoint Energy natural gas utilities shown. (Gas service lines are not shown). This signature not be used for conflict verification.

Signature valid for six months.

Date

CenterPoint Energy/UNDERGROUND Electrical Facilities Verification ONLY. (This signature verifies existing underground facilities – not to be used for conflict verification)

Signature valid for six months.

Date

Approved for AT&T underground conduit facilities only.
Signature valid for one year.

PAPE-DAWSON
2107 CITYWEST BLVD, 3RD FLR I HOUSTON, TX 77042 I 713.428.2400
TEXAS ENGINEERING FIRM #470 I TEXAS SURVEYING FIRM #10028800

PAPE-DAWSON
2107 CITYWEST BOULEVARD
3RD FLR
HOUSTON, TEXAS 77402
713-428-2400
TX FIRM #470

SURVEYED BY:
PAPE-DAWSON
FB NO. 24-018

THIS DOCUMENT IS RELEASED FOR INTERIM REVIEW UNDER THE AUTHORIZATION OF AMIRHOSSEIN SHOKOUHI, P.E. (#139835) AND IS **NOT TO BE USED FOR CONSTRUCTION.**

CITY OF HOUSTON
HOUSTON PUBLIC WORKS

LIFT STATION REHABILITATION AND RECONSTRUCTION
BEN'S BRANCH, WOODLAND RIDGE, ELMWOOD HILLS, FOREST SHORES, TRAIL RIVER, RIVERLAWN

CIVIL

TRAIL RIVER LIFT STATION PAVING AND GRADING PLAN

WBS NUMBER	FOR CITY OF HOUSTON USE ONLY
R-000267-0180-3	
DRAWING SCALE	
AS NOTED	
CITY OF HOUSTON PM	
BRENDA JOHNSON P.E.	
SHEET NO. 202 OF 338	

TR-C-07

FILE PATH: K:\Projects\423\77 COH LS Package\00\03 CADD\Plans\Sheets\06 Trail River\TR PAVING & GRADING-C-4237700.dwg

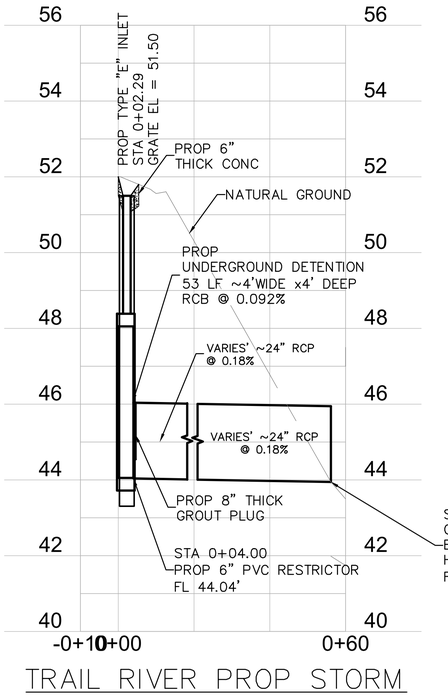

TRAIL RIVER PROP STORM

SCALE: 1"= 2'

0' 2' 4' 6'

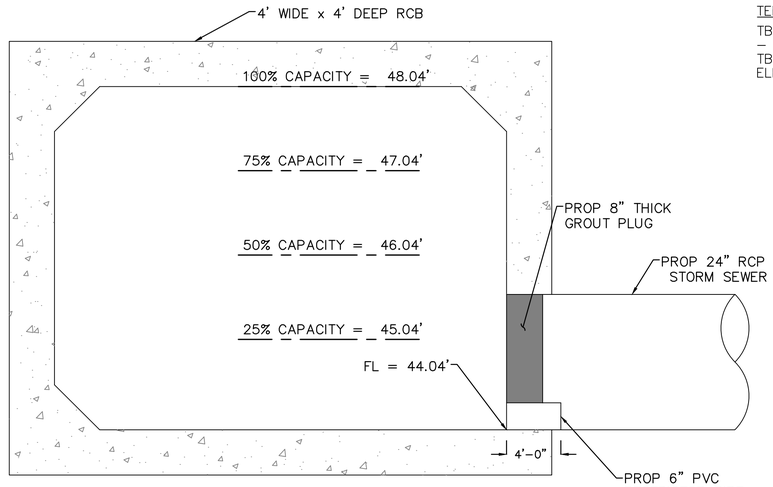

RCB/RESTRICTOR SECTION DETAIL

N.T.S.

TEMPORARY BENCHMARK DESCRIPTION

TBM-550 CUT "X" IN CONCRETE DRIVEWAY – ELEVATION 52.69'
TBM-551 CUT "X" IN CONCRETE PAD – ELEVATION 52.96'

NO.	DATE	REVISION	APP.

TRAIL RIVER LIFT STATION DETENTION & RESTRICTOR CALCULATIONS

DETENTION:

Disturbed Area	0.0241	ac
Detention Rate (R_d)	0.80	ac-ft/ac
Proposed (final) Impervious Area (A_p) =	0.0241	ac
Existing Impervious Area To Be Removed (A_e) =	0.0008	ac

Required Detention Volume = (Ap * Rd) - (Ae * 0.40 ac-ft/ac)
Total Required Detention Volume = 0.0189 ac-ft
Provided Detention Volume = 4' x 4' x 53' (W x D x L) = 0.0195 ac-ft

RESTRICTORS:

Low Level Restrictor (25% Flow)

Total Drainage Area =	0.0241	ac
Outflow Rate Allowed for Low Flow QL1 =	0.0120	cfs
Head HL1 (water surface differential) for Low Flow =	0.75	ft
Calculated Low Level Restrictor Size DL =	0.63	in
Provided/Designed Low Level Restrictor Size DL1 =	6	in

High Level Restrictor (75% Flow)

Total Drainage Area =	0.0241	ac
Total Outflow Rate (100%) Q =	0.0481	cfs
Re-calculated Head HL2 (water surface differential) for Low Level Restrictor =	2.75	ft
Re-calculated Low Flow Q L2 for Low Level Restrictor =	2.090	cfs
Outflow Rate Allowed for High Flow Qh1 (75%) =	-2.0422	cfs
Head Hh2 (water surface differential) for High Level Restrictor =	0.75	ft
Calculated High Level Restrictor Size Dh =	#NUM!	in
Provided/Designed High Level Restrictor Size Dh1 (75%) =	N/A	in

No need for High Level Restrictor

NOTICE:
FOR YOUR SAFETY, YOU ARE REQUIRED BY TEXAS LAW TO CALL 811 AT LEAST 48 HOURS BEFORE YOU DIG SO THAT UNDERGROUND LINES CAN BE MARKED. THIS SIGNATURE DOES NOT FULFILL YOUR OBLIGATION TO CALL 811

VERIFICATION OF PRIVATE UTILITY LINES

Date

CenterPoint Energy natural gas utilities shown. (Gas service lines are not shown). This signature not be used for conflict verification.

Signature valid for six months.

Date

CenterPoint Energy/UNDERGROUND Electrical Facilities Verification ONLY. (This signature verifies existing underground facilities – not to be used for conflict verification)

Signature valid for six months.

Date

Approved for AT&T underground conduit facilities only.
Signature valid for one year.

PAPE-DAWSON
2107 CITYWEST BLVD, 3RD FLR I HOUSTON, TX 77042 I 713.428.2400
TEXAS ENGINEERING FIRM #470 I TEXAS SURVEYING FIRM #10028800

PAPE-DAWSON
2107 CITYWEST BOULEVARD
3RD FLR
HOUSTON, TEXAS 77402
713-428-2400
TX FIRM #470

THIS DOCUMENT IS RELEASED FOR INTERIM REVIEW UNDER THE AUTHORIZATION OF AMIRHOSSEIN SHOKOUHI, P.E. (#139835) AND IS **NOT TO BE USED FOR CONSTRUCTION.**

SURVEYED BY:
PAPE-DAWSON
FB NO. 24-018

CITY OF HOUSTON
HOUSTON PUBLIC WORKS

LIFT STATION REHABILITATION AND RECONSTRUCTION
BEN'S BRANCH, WOODLAND RIDGE, ELMWOOD HILLS, FOREST SHORES, TRAIL RIVER, RIVERLAWN

CIVIL

TRAIL RIVER LIFT STATION
PROPOSED STORM PROFILE

WBS NUMBER	FOR CITY OF HOUSTON USE ONLY
R-000267-0180-3	
DRAWING SCALE	
AS NOTED	
CITY OF HOUSTON PM	
BRENDA JOHNSON P.E.	
SHEET NO. 203 OF 338	

TR-C-08

FILE PATH: K:\Projects\423\77 COH LS Package\00\03 CADD\Plans\Sheets\06 Trail River\PYP PROF_STORM-C-4237700.dwg

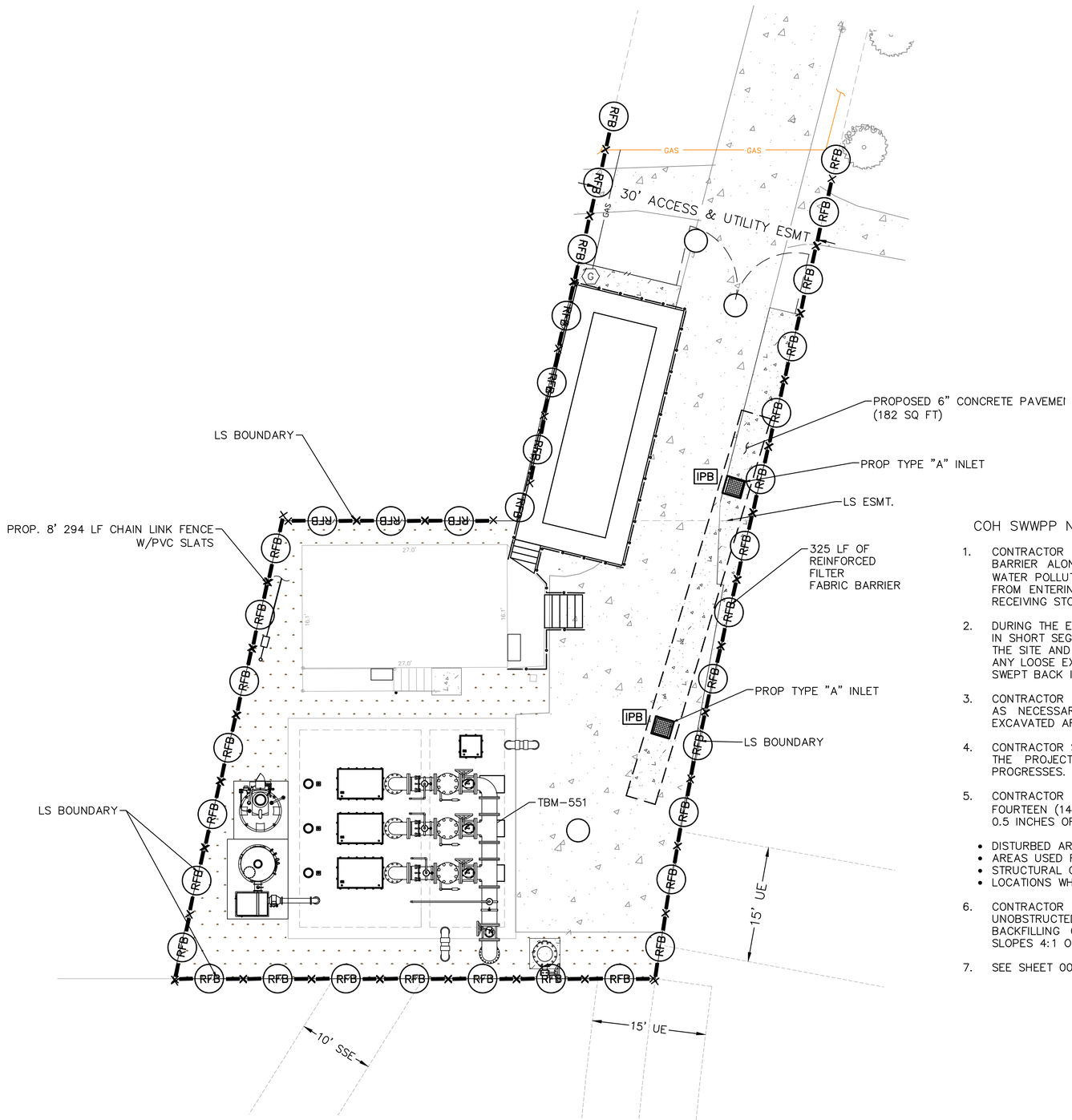

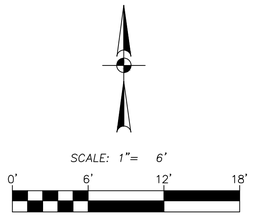

TEMPORARY BENCHMARK DESCRIPTION

TBM-550 CUT "X" IN CONCRETE DRIVEWAY – ELEVATION 52.69'
TBM-551 CUT "X" IN CONCRETE PAD – ELEVATION 52.96'

LEGEND

- RFB — REINFORCED FILTER FABRIC BARRIER
- EXISTING PAVEMENT
- EXISTING GRASS AREA
- PROPOSED PAVEMENT
- IPB — INLET PROTECTION BARRIER

NO.	DATE	REVISION	APP.

COH SWPPP NOTES:

1. CONTRACTOR SHALL IMPLEMENT INLET PROTECTION DEVICES AND REINFORCED FILTER FABRIC BARRIER ALONG ROAD AND SIDE DITCHES AT LOCATIONS SHOWN ON THE TYPICAL STORM WATER POLLUTION PREVENTION (SWPP) PLANS TO KEEP SILT AND OR EXCAVATED MATERIALS FROM ENTERING INTO THE STORM WATER INLETS AND DITCHES EVENTUALLY POLLUTING THE RECEIVING STORM.
2. DURING THE EXCAVATION PHASE OF THE PROJECT, CONTRACTOR SHALL SCHEDULE THE WORK IN SHORT SEGMENTS SO THAT EXCAVATION MATERIAL CAN BE QUICKLY HAULED AWAY FROM THE SITE AND TO PREVENT IT FROM STAYING UNCOLLECTED ON THE EXISTING PAVEMENT. ANY LOOSE EXCAVATED MATERIAL WHICH FALLS ON PAVEMENTS OR DRIVEWAYS SHALL BE SWEPT BACK INTO THE EXCAVATED AREA.
3. CONTRACTOR SHALL CLEAN UP THE EXISTING STREET INTERSECTIONS AND DRIVEWAYS DAILY, AS NECESSARY, TO REMOVE ANY EXCESS MUD, SILT OR ROCK TRACKED FORM THE EXCAVATED AREA.
4. CONTRACTOR SHALL FOLLOW GOOD HOUSEKEEPING PRACTICES DURING THE CONSTRUCTION OF THE PROJECT, ALWAYS CLEANING UP DIRT AND LOOSE MATERIAL AS CONSTRUCTION PROGRESSES.
5. CONTRACTOR TO INSPECT AND MAINTAIN THE AREAS LISTED BELOW AT LEAST ONCE EVERY FOURTEEN (14) CALENDAR DAYS AND WITHIN 24 HOURS OF THE END OF A STORM EVENT OF 0.5 INCHES OR GREATER.
   - DISTURBED AREAS OF THE CONSTRUCTION SITE THAT HAVE NOT BEEN FINALLY STABILIZED.
   - AREAS USED FOR STORAGE OF MATERIALS THAT ARE EXPOSED TO PRECIPITATION.
   - STRUCTURAL CONTROL MEASURES.
   - LOCATIONS WHERE VEHICLES ENTER OR EXIT THE SITE.
6. CONTRACTOR TO BE RESPONSIBLE TO MAINTAIN EXISTING DITCHES AND OR CULVERTS FOR UNOBSTRUCTED DRAINAGE AT ALL TIMES. WHERE SODDING IS DISTURBED BY EXCAVATION ON BACKFILLING OPERATIONS, SUCH AREAS SHALL BE REPLACED BY SEEDING OR SODDING. SLOPES 4:1 OR STEEPER SHALL BE REPLACED BY BLOCK SODDING.
7. SEE SHEET 007 FOR DETAILS.

NOTICE:
FOR YOUR SAFETY, YOU ARE REQUIRED BY TEXAS LAW TO CALL 811 AT LEAST 48 HOURS BEFORE YOU DIG SO THAT UNDERGROUND LINES CAN BE MARKED. THIS SIGNATURE DOES NOT FULFILL YOUR OBLIGATION TO CALL 811

VERIFICATION OF PRIVATE UTILITY LINES

Date

CenterPoint Energy natural gas utilities shown. (Gas service lines are not shown). This signature not be used for conflict verification.

Signature valid for six months.

Date

CenterPoint Energy/UNDERGROUND Electrical Facilities Verification ONLY. (This signature verifies existing underground facilities – not to be used for conflict verification)

Signature valid for six months.

Date

Approved for AT&T underground conduit facilities only.
Signature valid for one year.

PAPE-DAWSON
2107 CITYWEST BLVD, 3RD FLR I HOUSTON, TX 77042 I 713.428.2400
TEXAS ENGINEERING FIRM #470 I TEXAS SURVEYING FIRM #10028800

PAPE-DAWSON
2107 CITYWEST BOULEVARD
3RD FLR
HOUSTON, TEXAS 77402
713-428-2400
TX FIRM #470

SURVEYED BY:
PAPE-DAWSON
FB NO. 24-018

THIS DOCUMENT IS RELEASED FOR INTERIM REVIEW UNDER THE AUTHORIZATION OF AMIRHOSSEIN SHOKOUHI, P.E. (#139835) AND IS **NOT TO BE USED FOR CONSTRUCTION.**

CITY OF HOUSTON
HOUSTON PUBLIC WORKS

LIFT STATION REHABILITATION AND RECONSTRUCTION
BEN'S BRANCH, WOODLAND RIDGE, ELMWOOD HILLS, FOREST SHORES, TRAIL RIVER, RIVERLAWN

CIVIL

TRAIL RIVER LIFT STATION SWPPP

WBS NUMBER	FOR CITY OF HOUSTON USE ONLY
R-000267-0180-3	
DRAWING SCALE	
AS NOTED	
CITY OF HOUSTON PM	
BRENDA JOHNSON P.E.	
SHEET NO. 205 OF 338	

TR-C-09

FILE PATH: K:\Projects\423\77 COH LS Package\00\03 CADD\Plans\Sheets\06 Trail River\TR SWPPP-C-4237700.dwg

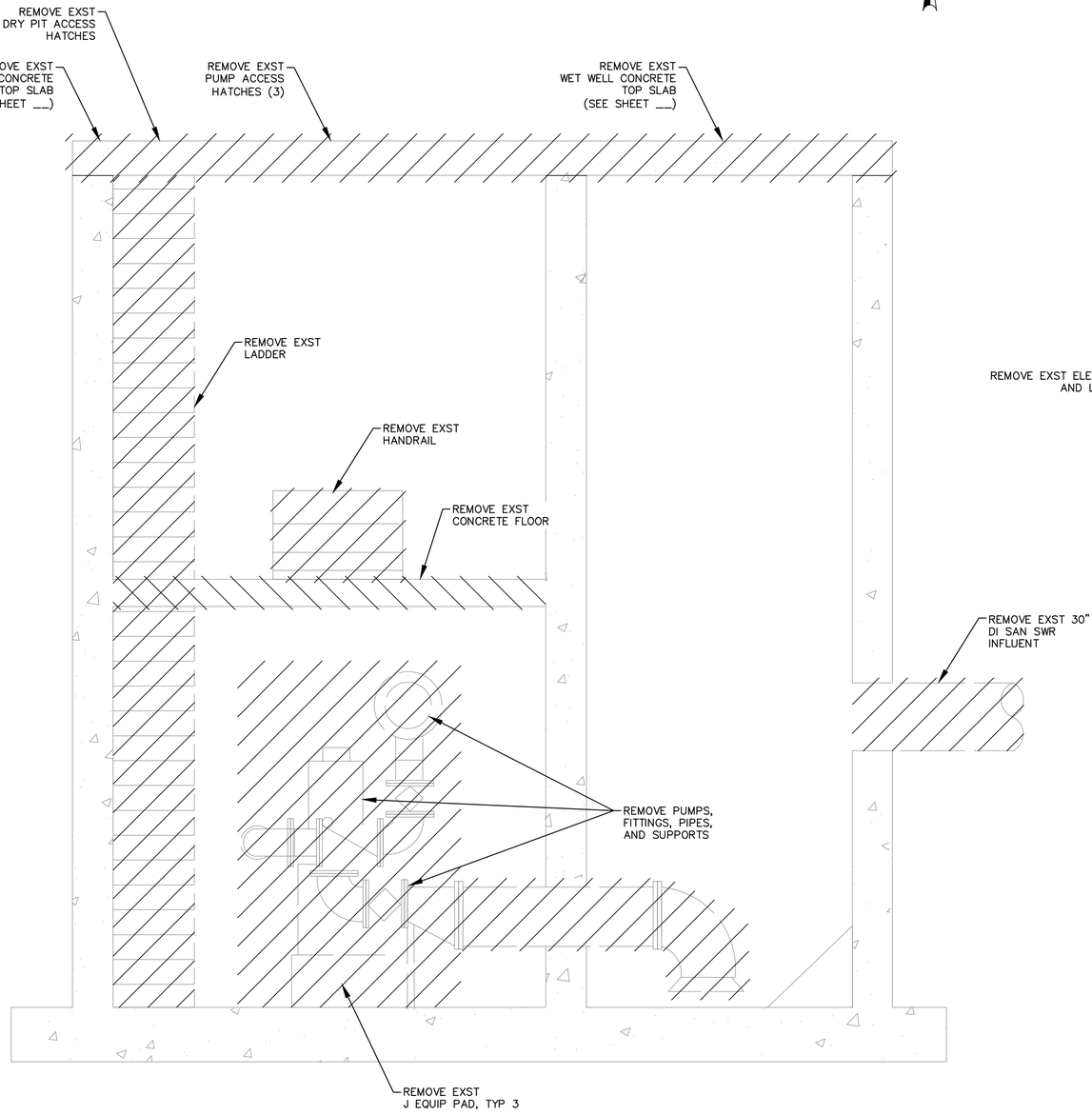

SECTION A

SCALE 3/8"=1'-0"

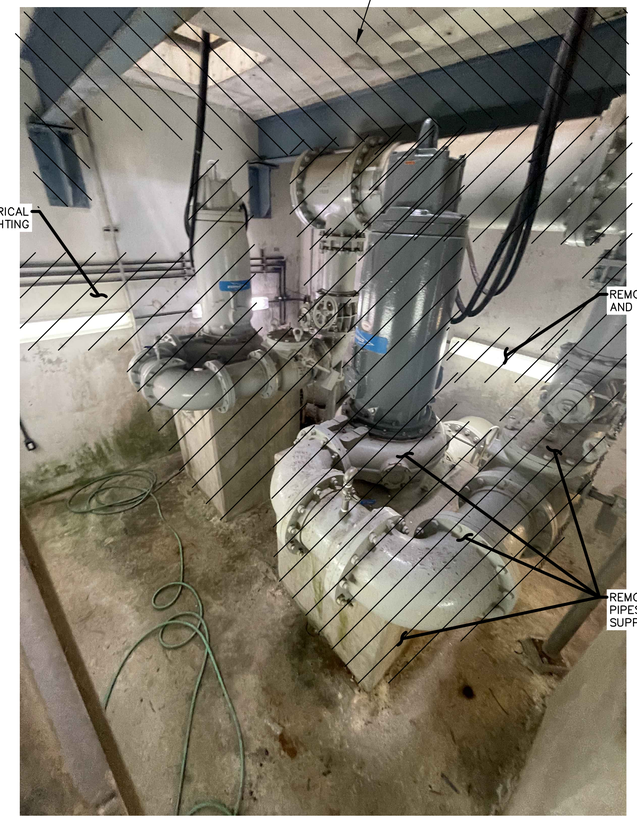

VALVE VAULT

NTS

LEGEND

TO BE REMOVED

NO.	DATE	REVISION	APP.

NOTICE:
FOR YOUR SAFETY, YOU ARE REQUIRED BY TEXAS LAW TO CALL 811 AT LEAST 48 HOURS BEFORE YOU DIG SO THAT UNDERGROUND LINES CAN BE MARKED. THIS SIGNATURE DOES NOT FULFILL YOUR OBLIGATION TO CALL 811

VERIFICATION OF PRIVATE UTILITY LINES

Date

CenterPoint Energy natural gas utilities shown. (Gas service lines are not shown). This signature not be used for conflict verification.

Signature valid for six months.

Date

CenterPoint Energy/UNDERGROUND Electrical Facilities Verification ONLY. (This signature verifies existing underground facilities – not to be used for conflict verification)

Signature valid for six months.

Date

Approved for AT&T underground conduit facilities only.
Signature valid for one year.

PAPE-DAWSON
2107 CITYWEST BLVD, 3RD FLR I HOUSTON, TX 77042 I 713.428.2400
TEXAS ENGINEERING FIRM #470 I TEXAS SURVEYING FIRM #10028800

PAPE-DAWSON
2107 CITYWEST BOULEVARD
3RD FLR
HOUSTON, TEXAS 77402
713-428-2400
TX FIRM #470

SURVEYED BY:
PAPE-DAWSON
FB NO. 24-018

THIS DOCUMENT IS RELEASED FOR INTERIM REVIEW UNDER THE AUTHORIZATION OF AMIRHOSSEIN SHOKOUHI, P.E. (#139835) AND IS **NOT TO BE USED FOR CONSTRUCTION.**

CITY OF HOUSTON
HOUSTON PUBLIC WORKS

LIFT STATION REHABILITATION AND RECONSTRUCTION
BEN'S BRANCH, WOODLAND RIDGE, ELMWOOD HILLS, FOREST SHORES, TRAIL RIVER, RIVERLAWN

MECHANICAL

TRAIL RIVER LIFT STATION DEMOLITION SECTIONS

WBS NUMBER	FOR CITY OF HOUSTON USE ONLY
R-000267-0180-3	
DRAWING SCALE	
AS NOTED	
CITY OF HOUSTON PM	
BRENDA JOHNSON P.E.	
SHEET NO. 210 OF 338	

TR-M-01

FILE PATH: K:\Projects\423\77 COH LS Package\00\03 CADD\Plans\Sheets\06 Trail River\TR EXIST DEMO SECTION-M-4237700.dwg

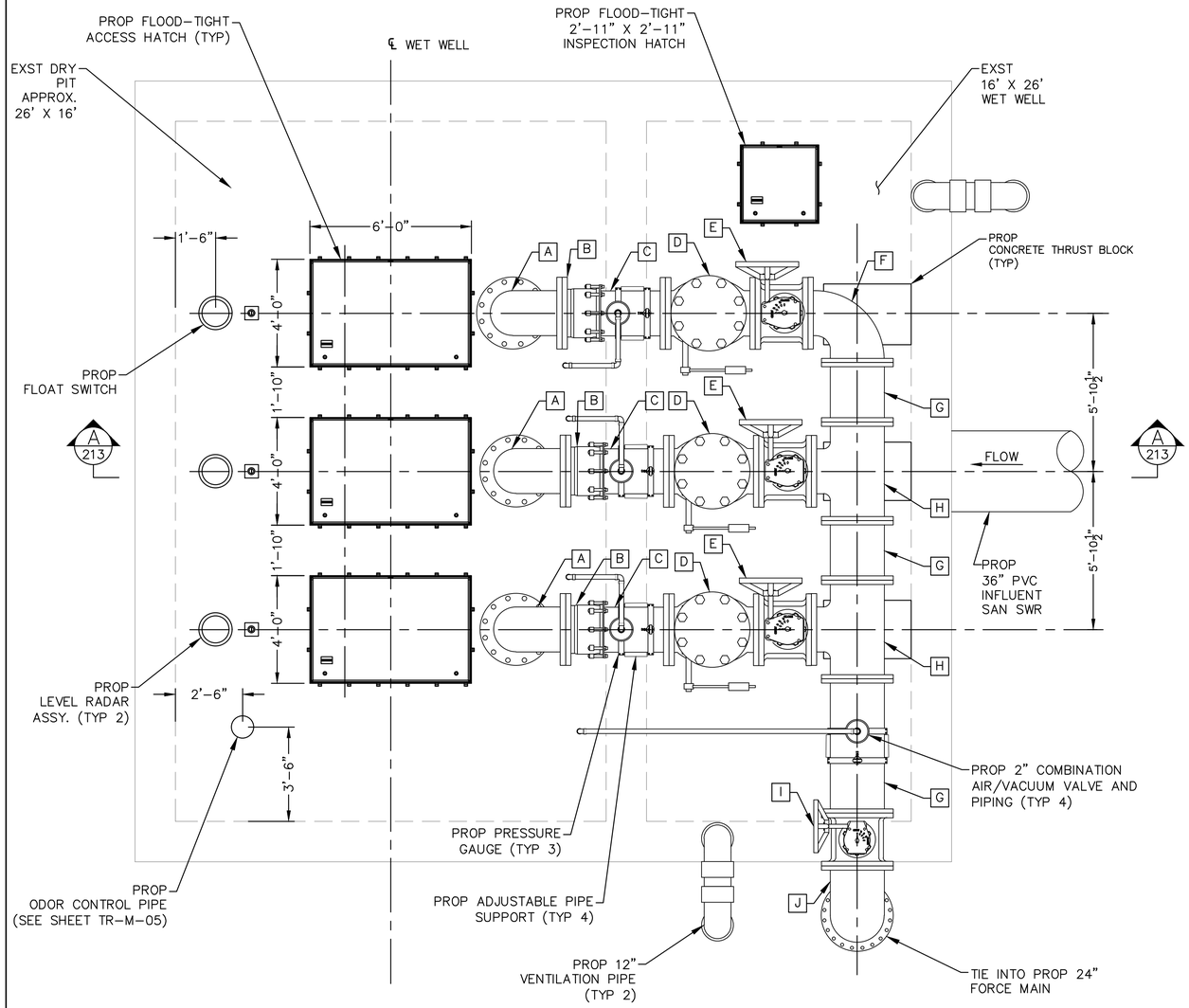

PLAN VIEW @ GRADE

SCALE 3/8"=1'-0"

PIPE AND FITTING SCHEDULE		
MARK	DESCRIPTION	CONNECTION
A	20"x90° BEND	FLG/FLG
B	20" RESTRAINED FLANGED COUPLING ADAPTOR	FCA501 OR APPROVED EQUAL
C	20" SPOOL	FLG/FLG
D	20" CHECK VALVE	FLG
E	20" PLUG VALVE	FLG
F	20"x24"x90° REDUCING BEND	FLG/FLG
G	24" SPOOL	FLG/FLG
H	20"x24" REDUCING TEE	FLG
I	24" PLUG VALVE	FLG
J	24"x45° BEND	FLG

LIFT STATION NOTES:

1. ALL SUPPORT BRACKETS, HARDWARE, ANCHORS, BOLTS, ETC. INSIDE WET WELL SHALL BE TYPE 316 STAINLESS STEEL.
2. ALL INTERIOR SURFACES OF CONCRETE WET WELL SHALL BE COATED WITH AN 80 MIL (MIN.) COAT OF RAVEN 405 ULTRA HIGH BUILD EPOXY COATING, SPRAY WALL EPOXY COATING, OR APPROVED EQUAL.
3. ALL PUMP DISCHARGE PIPING IN WET WELL AND VALVE PAD TO BE FLANGED (INSIDE WET WELL/PAD) OR TR FLEX RESTRAINED MECHANICAL JOINT (WHEN BURIED) DUCTILE IRON PIPING. ALL DUCTILE IRON PIPING SHALL BE EPOXY LINED WITH TNEMEC SERIES 431 PERMA-SHIELD PL CERAMIC EPOXY OR APPROVED EQUAL.
4. ALL EXPOSED DUCTILE IRON PIPING, FITTINGS, AND VALVES SHALL BE SANDBLASTED AND COATED WITH TWO (2) COATS OF TNEMEC SERIES 27WB TYPOXY APPLIED AT 6.0 TO 8.0 DRY MILS AND TOPCOATED WITH TNEMEC SERIES 740 UVX APPLIED AT 3.0 TO 5.0 DRY MILS. FINAL COLOR TO BE APPROVED BY THE CITY. SHOP PRIMING WITH TNEMEC SERIES N140 IS ACCEPTABLE. BITUMASTIC COATING SHALL NOT BE APPLIED TO EXPOSED DI PIPING.
5. ALL BURIED DUCTILE IRON PIPING, FITTINGS, AND VALVES SHALL BE WRAPPED WITH A POLYETHYLENE ENCASEMENT IN ACCORDANCE WITH THE LATEST REVISION OF AWWA C105.
6. ALL MECHANICAL JOINT FITTINGS TO BE RESTRAINED USING SERIES 1100 OR 2000PV MEGALUG JOINT RESTRAINTS.
7. PUMP SPACING DIMENSIONS SHOWN ARE APPROXIMATE. ACTUAL DIMENSIONS SHALL BE DETERMINED BY SPECIFIC PUMP MANUFACTURER.
8. PRIMARY LEVEL CONTROL WILL BE PROVIDED BY A SUBMERSIBLE LEVEL TRANSDUCER WITH OPERATION POINTS AS DETERMINED BY ENGINEER. MULTITRODE PROBES ARE FOR BACKUP OPERATION ONLY. REFER TO ELECTRICAL SPECIFICATIONS FOR EQUIPMENT INFORMATION.
9. FLOOD-TIGHT ACCESS HATCH AS SHOWN OR AS REQUIRED BY PUMP MANUFACTURER. DIMENSION MAY VARY PER HATCH MANUFACTURER.

NO.	DATE	REVISION	APP.

NOTICE:
FOR YOUR SAFETY, YOU ARE REQUIRED BY TEXAS LAW TO CALL 811 AT LEAST 48 HOURS BEFORE YOU DIG SO THAT UNDERGROUND LINES CAN BE MARKED. THIS SIGNATURE DOES NOT FULFILL YOUR OBLIGATION TO CALL 811

VERIFICATION OF PRIVATE UTILITY LINES

Date

CenterPoint Energy natural gas utilities shown. (Gas service lines are not shown). This signature not be used for conflict verification.

Signature valid for six months.

Date

CenterPoint Energy/UNDERGROUND Electrical Facilities Verification ONLY. (This signature verifies existing underground facilities – not to be used for conflict verification)

Signature valid for six months.

Date

Approved for AT&T underground conduit facilities only.
Signature valid for one year.

PAPE-DAWSON
2107 CITYWEST BLVD, 3RD FLR I HOUSTON, TX 77042 I 713.428.2400
TEXAS ENGINEERING FIRM #470 I TEXAS SURVEYING FIRM #10028800

PAPE-DAWSON
2107 CITYWEST BOULEVARD
3RD FLR
HOUSTON, TEXAS 77402
713-428-2400
TX FIRM #470

SURVEYED BY:
PAPE-DAWSON
FB NO. 24-018

THIS DOCUMENT IS RELEASED FOR INTERIM REVIEW UNDER THE AUTHORIZATION OF AMIRHOSSEIN SHOKOUHI, P.E. (#139835) AND IS **NOT TO BE USED FOR CONSTRUCTION.**

CITY OF HOUSTON
HOUSTON PUBLIC WORKS

LIFT STATION REHABILITATION AND RECONSTRUCTION
BEN'S BRANCH, WOODLAND RIDGE, ELMWOOD HILLS, FOREST SHORES, TRAIL RIVER, RIVERLAWN

MECHANICAL

TRAIL RIVER LIFT STATION PROPOSED PLAN

WBS NUMBER	FOR CITY OF HOUSTON USE ONLY
R-000267-0180-3	
DRAWING SCALE	
AS NOTED	
CITY OF HOUSTON PM	
BRENDA JOHNSON P.E.	
SHEET NO. 211 OF 338	

TR-M-02

FILE PATH: K:\Projects\423\77 COH LS Package\00\03 CADD\Plans\Sheets\06 Trail River\TR PROP PLAN VIEW & SECTION-M-4237700.dwg

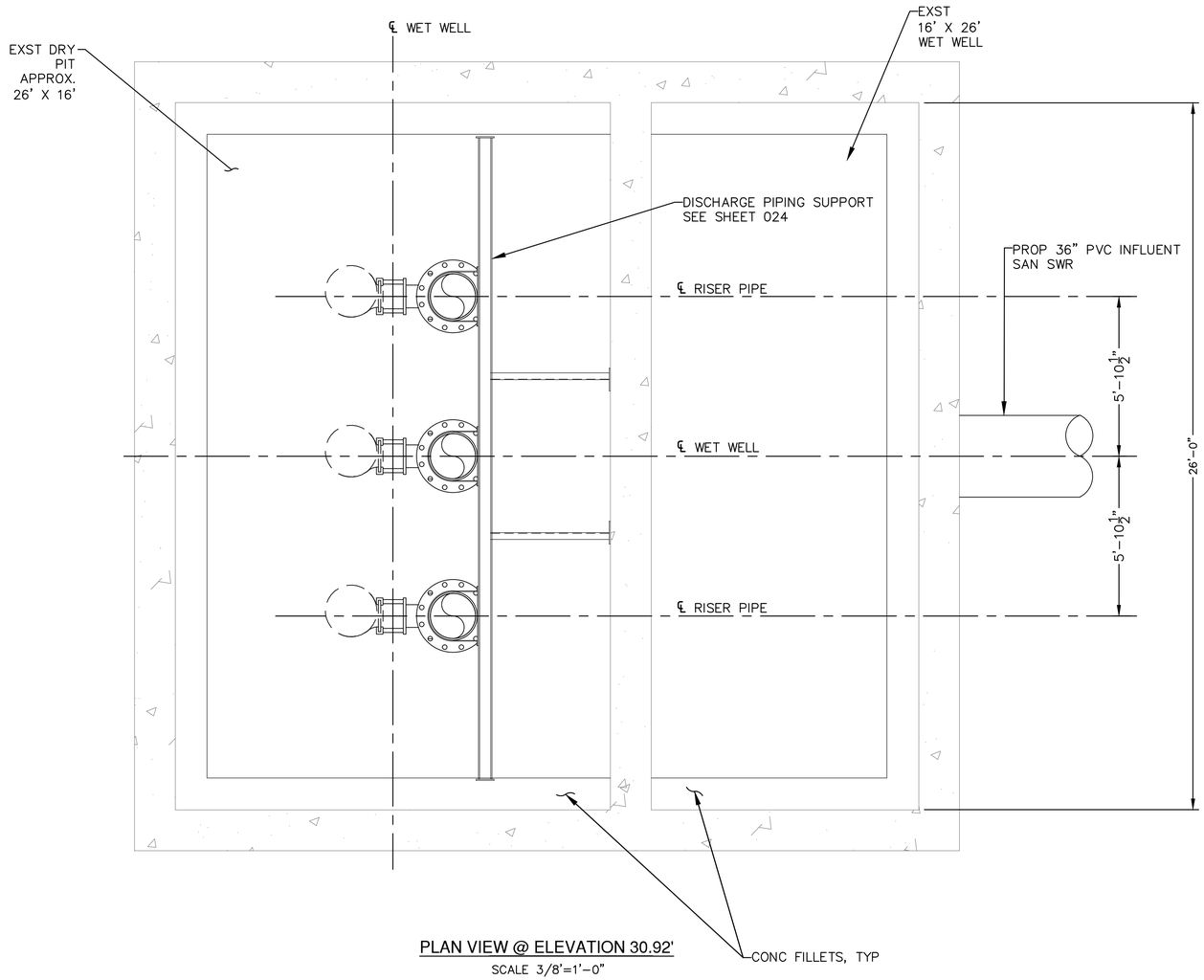

PLAN VIEW @ ELEVATION 30.92'

SCALE 3/8"=1'-0"

LIFT STATION NOTES:

1. ALL SUPPORT BRACKETS, HARDWARE, ANCHORS, BOLTS, ETC. INSIDE WET WELL SHALL BE TYPE 316 STAINLESS STEEL.
2. ALL INTERIOR SURFACES OF CONCRETE WET WELL SHALL BE COATED WITH AN 80 MIL (MIN.) COAT OF RAVEN 405 ULTRA HIGH BUILD EPOXY COATING, SPRAY WALL EPOXY COATING, OR APPROVED EQUAL.
3. ALL PUMP DISCHARGE PIPING IN WET WELL AND VALVE PAD TO BE FLANGED (INSIDE WET WELL/PAD) OR TR FLEX RESTRAINED MECHANICAL JOINT (WHEN BURIED) DUCTILE IRON PIPING. ALL DUCTILE IRON PIPING SHALL BE EPOXY LINED WITH TNEMEC SERIES 431 PERMA-SHIELD PL CERAMIC EPOXY OR APPROVED EQUAL.
4. ALL EXPOSED DUCTILE IRON PIPING, FITTINGS, AND VALVES SHALL BE SANDBLASTED AND COATED WITH TWO (2) COATS OF TNEMEC SERIES 27WB TYPOXY APPLIED AT 6.0 TO 8.0 DRY MILS AND TOPCOATED WITH TNEMEC SERIES 740 UVX APPLIED AT 3.0 TO 5.0 DRY MILS. FINAL COLOR TO BE APPROVED BY THE CITY. SHOP PRIMING WITH TNEMEC SERIES N140 IS ACCEPTABLE. BITUMASTIC COATING SHALL NOT BE APPLIED TO EXPOSED DI PIPING.
5. ALL BURIED DUCTILE IRON PIPING, FITTINGS, AND VALVES SHALL BE WRAPPED WITH A POLYETHYLENE ENCASEMENT IN ACCORDANCE WITH THE LATEST REVISION OF AWWA C105.
6. ALL MECHANICAL JOINT FITTINGS TO BE RESTRAINED USING SERIES 1100 OR 2000PV MEGALUG JOINT RESTRAINTS.
7. PUMP SPACING DIMENSIONS SHOWN ARE APPROXIMATE. ACTUAL DIMENSIONS SHALL BE DETERMINED BY SPECIFIC PUMP MANUFACTURER.
8. PRIMARY LEVEL CONTROL WILL BE PROVIDED BY A SUBMERSIBLE LEVEL TRANSDUCER WITH OPERATION POINTS AS DETERMINED BY ENGINEER. MULTITRODE PROBES ARE FOR BACKUP OPERATION ONLY. REFER TO ELECTRICAL SPECIFICATIONS FOR EQUIPMENT INFORMATION.
9. FLOOD-TIGHT ACCESS HATCH AS SHOWN OR AS REQUIRED BY PUMP MANUFACTURER. DIMENSION MAY VARY PER HATCH MANUFACTURER.

NO.	DATE	REVISION	APP.

NOTICE:
FOR YOUR SAFETY, YOU ARE REQUIRED BY TEXAS LAW TO CALL 811 AT LEAST 48 HOURS BEFORE YOU DIG SO THAT UNDERGROUND LINES CAN BE MARKED. THIS SIGNATURE DOES NOT FULFILL YOUR OBLIGATION TO CALL 811

VERIFICATION OF PRIVATE UTILITY LINES

Date

CenterPoint Energy natural gas utilities shown. (Gas service lines are not shown). This signature not be used for conflict verification.

Signature valid for six months.

Date

CenterPoint Energy/UNDERGROUND Electrical Facilities Verification ONLY. (This signature verifies existing underground facilities – not to be used for conflict verification)

Signature valid for six months.

Date

Approved for AT&T underground conduit facilities only.
Signature valid for one year.

PAPE-DAWSON
2107 CITYWEST BLVD, 3RD FLR I HOUSTON, TX 77042 I 713.428.2400
TEXAS ENGINEERING FIRM #470 I TEXAS SURVEYING FIRM #10028800

PAPE-DAWSON
2107 CITYWEST BOULEVARD
3RD FLR
HOUSTON, TEXAS 77402
713-428-2400
TX FIRM #470

SURVEYED BY:
PAPE-DAWSON
FB NO. 24-018

THIS DOCUMENT IS RELEASED FOR INTERIM REVIEW UNDER THE AUTHORIZATION OF AMIRHOSSEIN SHOKOUHI, P.E. (#139835) AND IS **NOT TO BE USED FOR CONSTRUCTION.**

CITY OF HOUSTON
HOUSTON PUBLIC WORKS

LIFT STATION REHABILITATION AND RECONSTRUCTION
BEN'S BRANCH, WOODLAND RIDGE, ELMWOOD HILLS, FOREST SHORES, TRAIL RIVER, RIVERLAWN

MECHANICAL

TRAIL RIVER LIFT STATION SECTION VIEW ELEVATION 30.92

WBS NUMBER	FOR CITY OF HOUSTON USE ONLY
R-000267-0180-3	
DRAWING SCALE	
AS NOTED	
CITY OF HOUSTON PM	
BRENDA JOHNSON P.E.	
SHEET NO. 212 OF 338	

TR-M-03

FILE PATH: K:\Projects\423\77 COH LS Package\00\03 CADD\Plans\Sheets\06 Trail River\TR PROP PLAN VIEW & SECTION-M-4237700.dwg

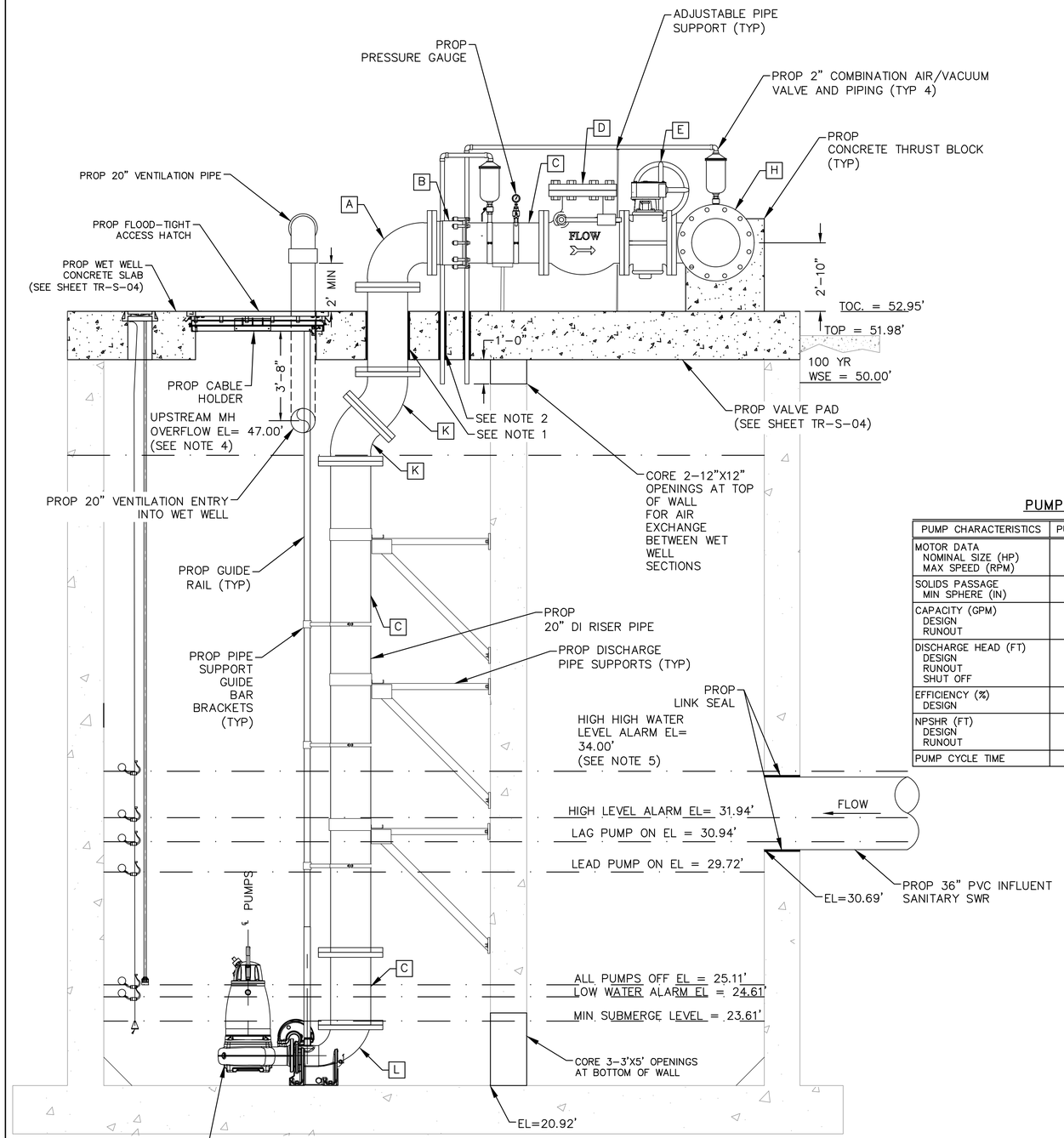

SECTION A
SCALE 3/8"=1'-0"

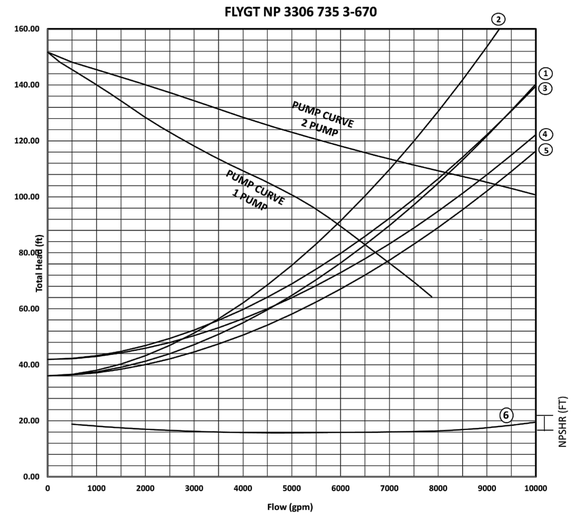

PUMP OPERATION CURVES

PUMP CURVE NOTES:

1. LOW NORMAL OPERATING LEVEL C=120 – DESIGN.
2. HIGH NORMAL OPERATING LEVEL C=100 – INFORMATION ONLY (TCEQ)
3. HIGH NORMAL OPERATING LEVEL C=120 – DESIGN
4. HIGH NORMAL OPERATING LEVEL C=140 – INFORMATION ONLY
5. EMERGENCY FLOODED OPERATING LEVEL C=140 – MAXIMUM DISCHARGE
6. NET POSITIVE SUCTION HEAD AVAILABLE (NPSHA) BASED ON NORMAL OPERATING WATER LEVELS
7. PUMP CURVES ARE MODIFIED FOR STATION LOSSES.

NOTE:

1. SLEEVED OPENING, SEAL W/ LINK-SEAL OR APPROVED EQUAL. AT TOP OF SLAB FILL VOID AROUND SEAL W/ GROUT & RECESS APPROX ¼" BELOW TOP OF SLAB. (SEE SHEET 025)
2. SLEEVED WET WELL PENETRATION (SEE SHEET 025)
3. PROP ALL PUMPS OFF LEVEL 1 FT HIGHER THE PUMP MIN SUBMERGE LEVEL
4. UPSTREAM MH OVERFLOW ELEVATION PROVIDED BY CITY OF HOUSTON WASTEWATER PLANNING DEPARTMENT.
5. HIGH HIGH WATER LEVEL ALARM ELEVATION TO PROVIDE MINIMUM 2 HOURS RESPONSE TIME PRIOR TO UPSTREAM MANHOLE OVERFLOW ELEVATION
6. SEE SHEET TR-M-02 FOR LIFT STATION NOTES

PUMP DATA TABLE

PUMP CHARACTERISTICS	PUMP NO. 1	PUMP NO. 2	PUMP NO. 3
MOTOR DATA NOMINAL SIZE (HP) MAX SPEED (RPM)	 215 1,185	 215 1,185	 215 1,185
SOLIDS PASSAGE MIN SPHERE (IN)	 <3	 <3	 <3
CAPACITY (GPM) DESIGN RUNOUT	 5,900 7,780	 5,900 7,780	 5,900 7,780
DISCHARGE HEAD (FT) DESIGN RUNOUT SHUT OFF	 90.0 64.3 152.0	 90.0 64.3 152.0	 90.0 64.3 152.0
EFFICIENCY (%) DESIGN	 79.1	 79.1	 79.1
NPSHR (FT) DESIGN RUNOUT	 16 69	 16 69	 16 69
PUMP CYCLE TIME	15	15	15

STATION OPERATION TABLES

RISING LEVEL CYCLE

WATER LEVEL DEPTH	WATER LEVEL ELEVATION	ACTION	PUMP(S) IN OPERATION
4.19	25.11	PUMPS OFF LEVEL – NO ACTION	ALL PUMPS ARE OFF
8.80	29.72	LEAD PUMP TURNS ON	LEAD PUMP ON
10.02	30.94	SECOND PUMP TURNS ON	LEAD & SECOND PUMPS ON
11.02	31.94	HIGH WATER ALARM ON	HIGH WATER ALARM SOUND
13.08	34.00	HIGH HIGH LEVEL ALARM (FLOAT ON LEVEL)	HIGH WATER ALARM SOUND ALL PUMPS ON FLOAT

FALLING LEVEL CYCLE

WATER LEVEL DEPTH	WATER LEVEL ELEVATION	ACTION	PUMP(S) IN OPERATION
12.58	33.5	FLOAT OFF LEVEL	ALL PUMPS OFF FLOATS
10.02	30.94	HIGH WATER LEVEL ALARM OFF	LEAD & SECOND PUMPS ON
8.80	29.72	LEAD PUMP TURNS OFF	SECOND PUMP ON
4.19	25.11	SECOND PUMP TURNS OFF	ALL PUMPS STOPPED – STANDBY PUMP SWITCHES TO LEAD PUMP
3.69	24.61	LOW LEVEL ALARM	–

PIPE AND FITTING SCHEDULE

MARK	DESCRIPTION	CONNECTION
A	20"x90° BEND	FLG/FLG
B	20" RESTRAINED FLANGED COUPLING ADAPTOR	FCA501 OR APPROVED EQUAL
C	20" SPOOL	FLG/FLG
D	20" CHECK VALVE	FLG
E	20" PLUG VALVE	FLG
F	20"x24"x90° REDUCING BEND	FLG/FLG
G	24" SPOOL	FLG/FLG
H	20"x24" REDUCING TEE	FLG
I	24" PLUG VALVE	FLG
J	24"x45° BEND	FLG
K	20"x45° BEND	FLG
L	20"x12" 90° BEND REDUCER	FLG/FLG

NOTICE:
FOR YOUR SAFETY, YOU ARE REQUIRED BY TEXAS LAW TO CALL 811 AT LEAST 48 HOURS BEFORE YOU DIG SO THAT UNDERGROUND LINES CAN BE MARKED. THIS SIGNATURE DOES NOT FULFILL YOUR OBLIGATION TO CALL 811

VERIFICATION OF PRIVATE UTILITY LINES

Date

CenterPoint Energy natural gas utilities shown. (Gas service lines are not shown). This signature not be used for conflict verification.

Signature valid for six months.

Date

CenterPoint Energy/UNDERGROUND Electrical Facilities Verification ONLY. (This signature verifies existing underground facilities – not to be used for conflict verification)

Signature valid for six months.

Date

Approved for AT&T underground conduit facilities only.
Signature valid for one year.

PAPE-DAWSON
2107 CITYWEST BLVD, 3RD FLR I HOUSTON, TX 77042 I 713.428.2400
TEXAS ENGINEERING FIRM #470 I TEXAS SURVEYING FIRM #10028800

PAPE-DAWSON
2107 CITYWEST BOULEVARD
3RD FLR
HOUSTON, TEXAS 77402
713-428-2400
TX FIRM #470

SURVEYED BY:
PAPE-DAWSON
FB NO. 24-018

THIS DOCUMENT IS RELEASED FOR INTERIM REVIEW UNDER THE AUTHORIZATION OF AMIRHOSSEIN SHOKOUHI, P.E. (#139835) AND IS **NOT TO BE USED FOR CONSTRUCTION.**

CITY OF HOUSTON
HOUSTON PUBLIC WORKS

LIFT STATION REHABILITATION AND RECONSTRUCTION
BEN'S BRANCH, WOODLAND RIDGE, ELMWOOD HILLS, FOREST SHORES, TRAIL RIVER, RIVERLAWN

MECHANICAL

TRAIL RIVER LIFT STATION PROPOSED SECTIONS

WBS NUMBER	FOR CITY OF HOUSTON USE ONLY
R-000267-0180-3	
DRAWING SCALE	
AS NOTED	
CITY OF HOUSTON PM	
BRENDA JOHNSON P.E.	
SHEET NO. 213 OF 338	

TR-M-04

NO.	DATE	REVISION	APP.

FILE PATH: K:\Projects\423\77 COH LS Package\00\03 CADD\Plans\Sheets\06 Trail River\TR PROP PLAN VIEW & SECTION-M-4237700.dwg

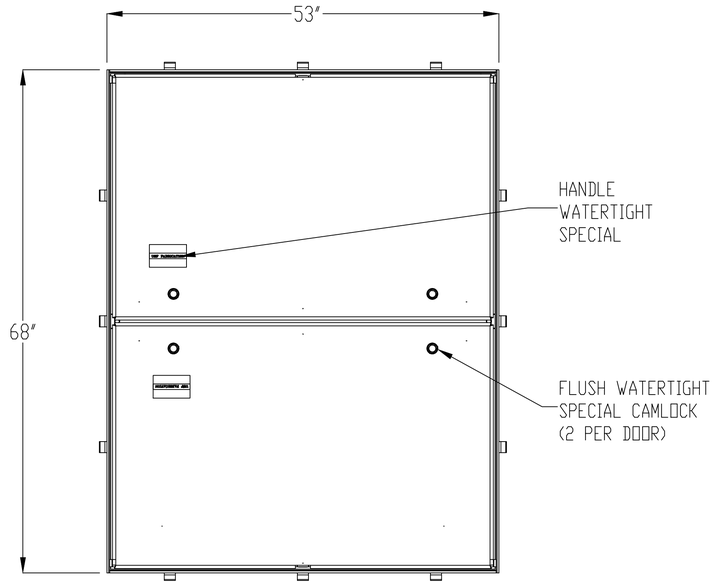

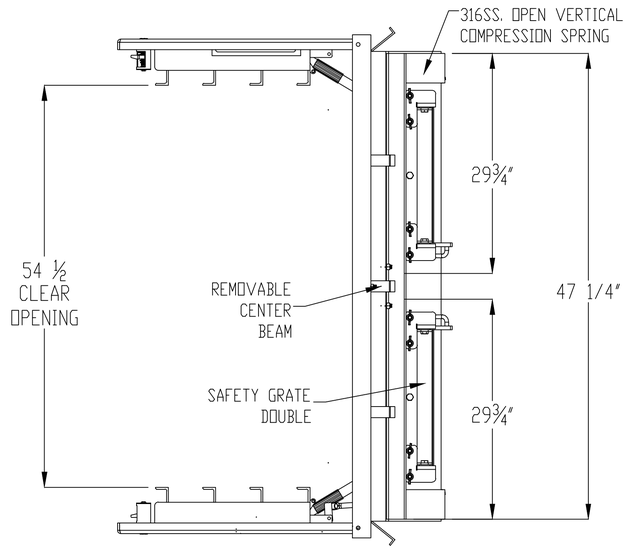

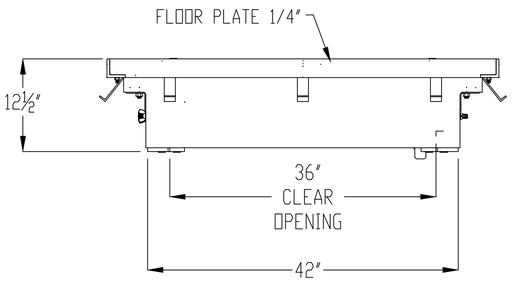

NOTES:
1- MATERIAL: ALUMINUM
MILL FINISH
2- LOADING DESIGNED FOR OFF STREET
LOCATIONS WHICH MAY OCCASIONALLY
RECEIVE H-20 WHEEL LOADS.
3- 316 STAINLESS STEEL BOLTS & NUTS
4- AREA OF FRAME IN CONTACT WITH CONCRETE
TO BE PAINTED WITH BITUMINOUS COATING
5- THIS DESIGN HAS BEEN TESTED AND CERTIFIELD TO BE FLOOD TIGHT
FOR UP TO 13FT. OF WATER, WITH ZERO LEAKAGE.
6- GASKET AND FRAME MUST BE FREE OF ANY DIRT OR DEBRIS PRIOR TO
CLOSING AND ALL CAM LOCKS MUST BE FULLY ENGAGED TO ENSURE
MAXIMUM FLOOD RESISTANCE

NO.	DATE	REVISION	APP.

THIS DOCUMENT IS THE PROPERTY OF U.S.F. FABRICATION, INC AND CONTAINS PROPRIETARY INFORMATION. IT SHALL NOT BE MODIFIED, COPIED, FURNISHED NOR DISTRIBUTED (IN WHOLE OR IN PART) WITHOUT PROPER AUTHORIZATION OF U.S.F. FABRICATION, INC.

INTERPRET DIMENSIONS AND TOLERANCES PER ASME Y14.5M

BREAK ALL SHARP CORNERS & EDGES TO 0.01

TOLERANCES UNLESS OTHERWISE SPECIFIED:
INCHES = +/- 1/16
1/16 = +/- 1/32
1/32 = +/- 1/64

COPYRIGHT © 2025 ALL RIGHTS RESERVED

U.S.F. FABRICATION INC.
HIALEAH, FLORIDA

HATCH ZAHDRB 42X63
ASSEMBLY

DRAWN BY:	SCALE: 1:16	SHEET 2 OF 2	DATE: 9/29/25	
JG				
APP'D BY: JG	DWG. NO: 1000290590		SHEET SIZE: B	REV: 0

NOTICE:
FOR YOUR SAFETY, YOU ARE REQUIRED BY TEXAS LAW TO CALL 811 AT LEAST 48 HOURS BEFORE YOU DIG SO THAT UNDERGROUND LINES CAN BE MARKED. THIS SIGNATURE DOES NOT FULFILL YOUR OBLIGATION TO CALL 811

VERIFICATION OF PRIVATE UTILITY LINES

Date

CenterPoint Energy natural gas utilities shown. (Gas service lines are not shown). This signature not be used for conflict verification.

Signature valid for six months.

Date

CenterPoint Energy/UNDERGROUND Electrical Facilities Verification ONLY. (This signature verifies existing underground facilities – not to be used for conflict verification)

Signature valid for six months.

Date

Approved for AT&T underground conduit facilities only.
Signature valid for one year.

PAPE-DAWSON
2107 CITYWEST BLVD, 3RD FLR I HOUSTON, TX 77042 I 713.428.2400
TEXAS ENGINEERING FIRM #470 I TEXAS SURVEYING FIRM #10028800

PAPE-DAWSON
2107 CITYWEST BOULEVARD
3RD FLR
HOUSTON, TEXAS 77402
713-428-2400
TX FIRM #470

SURVEYED BY:
PAPE-DAWSON
FB NO. 24-018

THIS DOCUMENT IS RELEASED FOR INTERIM REVIEW UNDER THE AUTHORIZATION OF AMIRHOSSEIN SHOKOUHI, P.E. (#139835) AND IS **NOT TO BE USED FOR CONSTRUCTION.**

CITY OF HOUSTON
HOUSTON PUBLIC WORKS

LIFT STATION REHABILITATION AND RECONSTRUCTION
BEN'S BRANCH, WOODLAND RIDGE, ELMWOOD HILLS, FOREST SHORES, TRAIL RIVER, RIVERLAWN

CIVIL

TRAIL RIVER LIFT STATION FLOOD-TIGHT ACCESS HATCH DETAIL

WBS NUMBER	FOR CITY OF HOUSTON USE ONLY
R-000267-0180-3	
DRAWING SCALE	
AS NOTED	
CITY OF HOUSTON PM	
BRENDA JOHNSON P.E.	
SHEET NO. OF 338	

FILE PATH: K:\Projects\423\77 COH LS Package\00\03 CADD\Plans\Sheets\06 Trail River\TR ACCESS HATCH DETAIL.dwg

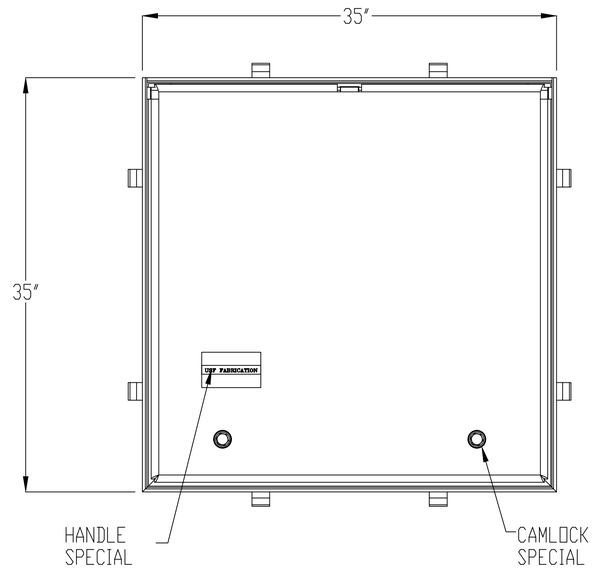

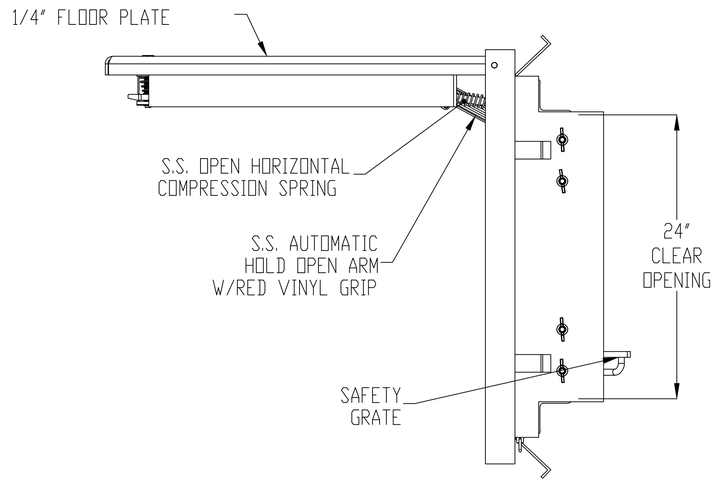

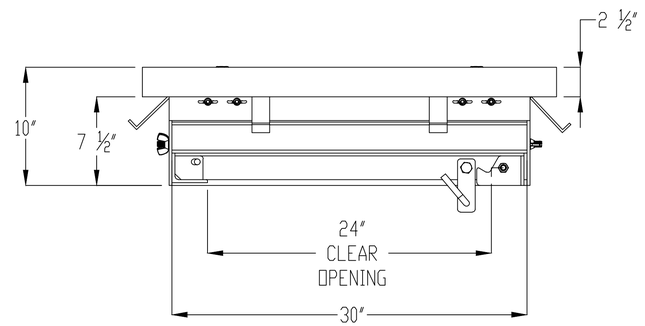

NOTES:
1- MATERIAL: ALUMINUM
MILL FINISH
2- LOADING LOADING: 1560 LBS. PER SQ. FT.
3- 316 STAINLESS STEEL BOLTS & NUTS
4- AREA OF FRAME IN CONTACT WITH CONCRETE
TO BE PAINTED WITH BITUMINOUS COATING
5- THIS DOOR IS DESIGNED TO BE FLOOD TIGHT.
6- GASKET AND FRAME MUST BE FREE OF ANY DIRT,
ROCKS OR OTHER DEBRIS AND CAMLOCKS MUST BE
PROPERLY ENGAGED TO ENSURE MAXIMUM FLOOD RESISTANCE.

THIS DOCUMENT IS THE PROPERTY OF U.S.F. FABRICATION, INC AND CONTAINS PROPRIETARY INFORMATION. IT SHALL NOT BE MODIFIED, COPIED, FURNISHED NOR DISTRIBUTED ON WHOLE OR IN PART) WITHOUT PROPER AUTHORIZATION OF U.S.F. FABRICATION, INC.

INTERPRET DIMENSIONS AND TOLERANCES PER ASME Y14.5M

BREAK ALL SHARP CORNERS & EDGES TO 0.01

TOLERANCES UNLESS OTHERWISE SPECIFIED:
INCHES = +/- 1/16
1/16 = +/- 1/32
1/32 = +/- 1/64

COPYRIGHT © 2025 ALL RIGHTS RESERVED

U.S.F. FABRICATION INC.
HIALEAH, FLORIDA

HATCH Z-APS 24X30
ASSEMBLY (ZERO LEAK)

DRAWN BY:	SCALE: 1:10	SHEET 2 OF 2	DATE: 9/25/25	
APP'D BY: JG	DWG. NO: 1000290577		SHEET SIZE: B	REV: 0

NO.	DATE	REVISION	APP.

NOTICE:
FOR YOUR SAFETY, YOU ARE REQUIRED BY TEXAS LAW TO CALL 811 AT LEAST 48 HOURS BEFORE YOU DIG SO THAT UNDERGROUND LINES CAN BE MARKED. THIS SIGNATURE DOES NOT FULFILL YOUR OBLIGATION TO CALL 811

VERIFICATION OF PRIVATE UTILITY LINES

Date

CenterPoint Energy natural gas utilities shown. (Gas service lines are not shown). This signature not be used for conflict verification.

Signature valid for six months.

Date

CenterPoint Energy/UNDERGROUND Electrical Facilities Verification ONLY. (This signature verifies existing underground facilities – not to be used for conflict verification)

Signature valid for six months.

Date

Approved for AT&T underground conduit facilities only.
Signature valid for one year.

PAPE–DAWSON
2107 CITYWEST BLVD, 3RD FLR I HOUSTON, TX 77042 I 713.428.2400
TEXAS ENGINEERING FIRM #470 I TEXAS SURVEYING FIRM #10028800

PAPE–DAWSON
2107 CITYWEST BOULEVARD
3RD FLR
HOUSTON, TEXAS 77402
713–428–2400
TX FIRM #470

SURVEYED BY:
PAPE–DAWSON
FB NO. 24–018

THIS DOCUMENT IS RELEASED FOR INTERIM REVIEW UNDER THE AUTHORIZATION OF AMIRHOSSEIN SHOKOUHI, P.E. (#139835) AND IS **NOT TO BE USED FOR CONSTRUCTION.**

CITY OF HOUSTON
HOUSTON PUBLIC WORKS

LIFT STATION REHABILITATION AND RECONSTRUCTION
BEN'S BRANCH, WOODLAND RIDGE, ELMWOOD HILLS, FOREST SHORES, TRAIL RIVER, RIVERLAWN

CIVIL

TRAIL RIVER LIFT STATION FLOOD–TIGHT INSPECTION HATCH DETAIL

WBS NUMBER	FOR CITY OF HOUSTON USE ONLY
R–000267–0180–3	
DRAWING SCALE	
AS NOTED	
CITY OF HOUSTON PM	
BRENDA JOHNSON P.E.	
SHEET NO. OF 338	

FILE PATH: K:\Projects\423\77 COH LS Package\00\03 CADD\Plans\Sheets\06 Trail River\TR INSPECTION HATCH DETAIL.dwg

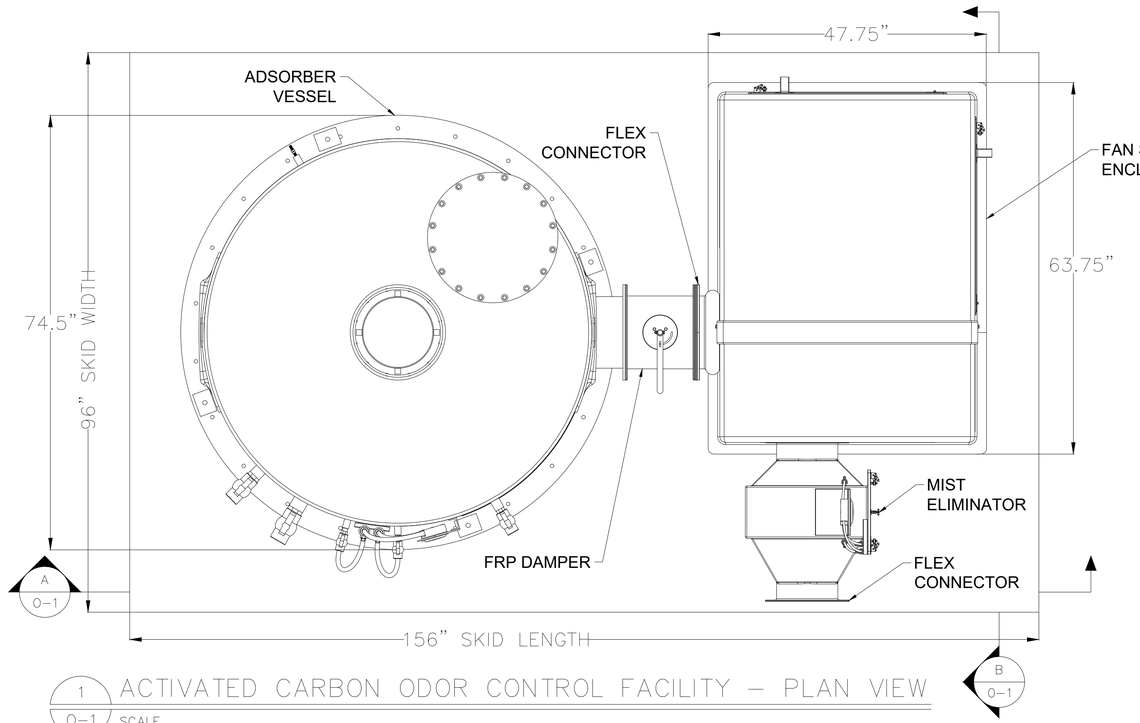

1 0-1 ACTIVATED CARBON ODOR CONTROL FACILITY – PLAN VIEW

0-1 SCALE

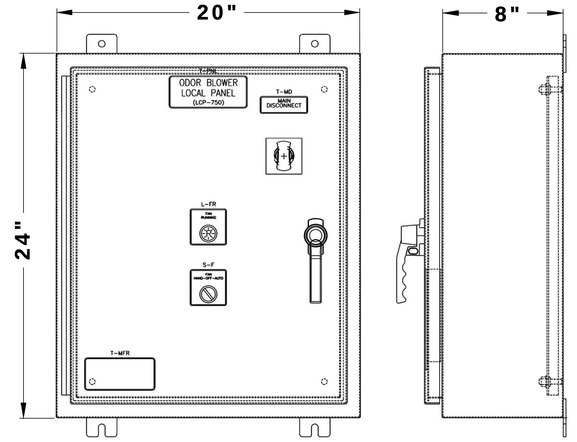

NOTE: PANEL SHALL BE SUPPLIED, LOCATED, AND INSTALLED MINIMUM THREE FEET AWAY FROM BLOWER, OR ODOR CONTROL VESSEL.

2 0-1 ACTIVATED CARBON CONTROL PANEL

NTS

NOTES:

1. SKID IS 13' LONG BY 8' WIDE. THE SKID AREA CONTAINS THE ACTIVATED CARBON ODOR CONTROL FACILITY.
2. DRAIN PORT TO BE CONNECTED TO DRAIN TO SEWER WITH 6" TRAP AS SHOWN ON SITE PLAN

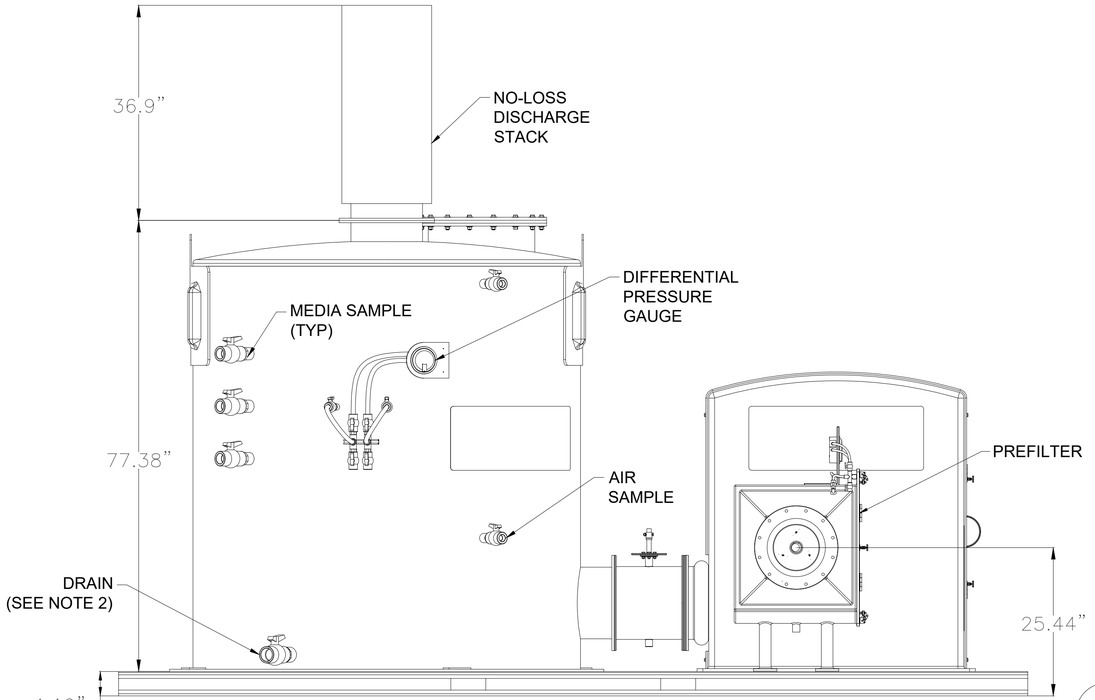

A 0-1 ACTIVATED CARBON ODOR CONTROL FACILITY – SECTION VIEW

0-1 SCALE

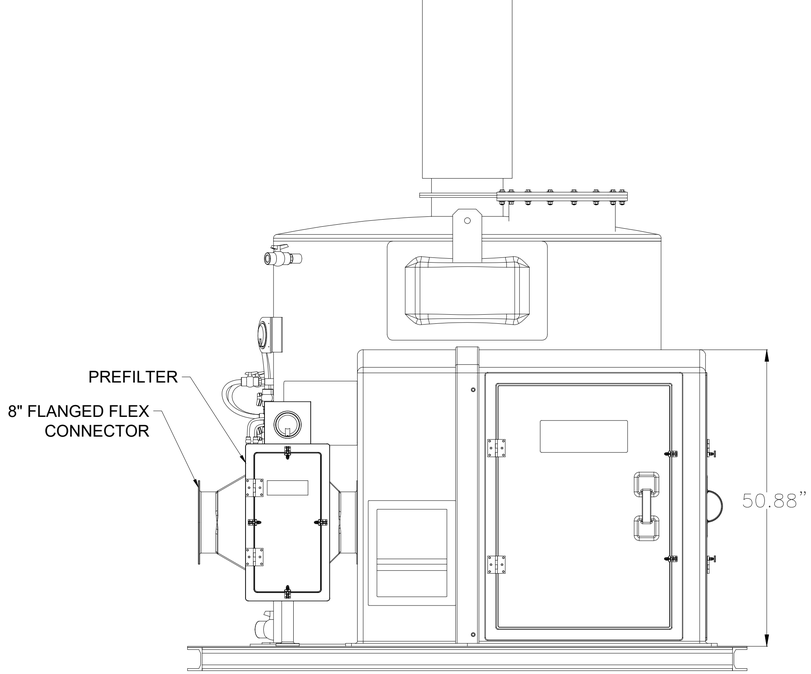

B 0-1 ACTIVATED CARBON ODOR CONTROL FACILITY – SECTION VIEW

0-1 SCALE

0' 1' 2' 3'

1" = 1'-0" (FULL)

DWG No. O-1

NO.	DATE	REVISION	APP.

PAPE-DAWSON

2107 CITYWEST BLVD, 3RD FLR I HOUSTON, TX 77042 I 713.428.2400

TEXAS ENGINEERING FIRM #470 I TEXAS SURVEYING FIRM #10028800

V&A Consulting Engineers, Inc.
15720 Park Row, Suite 500
Houston, TX 77084 Tel. (713) 568-9067
F-9154
V&A Project No.: 22-0426

INTERIM REVIEW ONLY
Document incomplete; not intended for regulatory approval, permit, or construction.
JAMES VAUGHAN HARSHMAN
Engineer
153247
Registration Number
09/02/2025
Date

SURVEYED BY:
PAPE-DAWSON ENGINEERS
FB NO. 24-018

V&A CONSULTING ENGINEERS, INC.
Texas Registered Engineering Firm F-9154

CITY OF HOUSTON
HOUSTON PUBLIC WORKS

LIFT STATION REHABILITATION AND RECONSTRUCTION
BEN'S BRANCH, WOODLAND RIDGE, ELMWOOD HILLS, FOREST SHORES, TRAIL RIVER, RIVERLAWN

TRAIL RIVER LIFT STATION ODOR CONTROL SYSTEM CARBON ADSORBER PLAN AND SECTION VIEW

WBS NUMBER	FOR CITY OF HOUSTON USE ONLY
R-000267-0180-3	
DRAWING SCALE	
AS NOTED	
CITY OF HOUSTON PM	
BRENDA JOHNSON P.E.	
SHEET NO. OF	

FILE PATH: E:\Projects\2022\0400 Thru 0499\22-0426 Var City Of Houston\500 Drawings\DESIGN\60%\60% Odor Sheets\06 Trail River\22-0426 Var City Of Houston Trail River Odor Control Detail.dwg

ODOR CONTROL SYSTEM ELECTRICAL CONTROL PANEL

LEGEND

- dP-X — Differential Pressure Gauge
- DV-XX — Manual Damper Butterfly Valve
- FC-XX — Flexible Duct Connection
- BV-XX — 2 Way Manual Ball Valve
- FXX_XXX — Flange Connection (size per chart)
- WL_XXX — Water Trap
- Drain

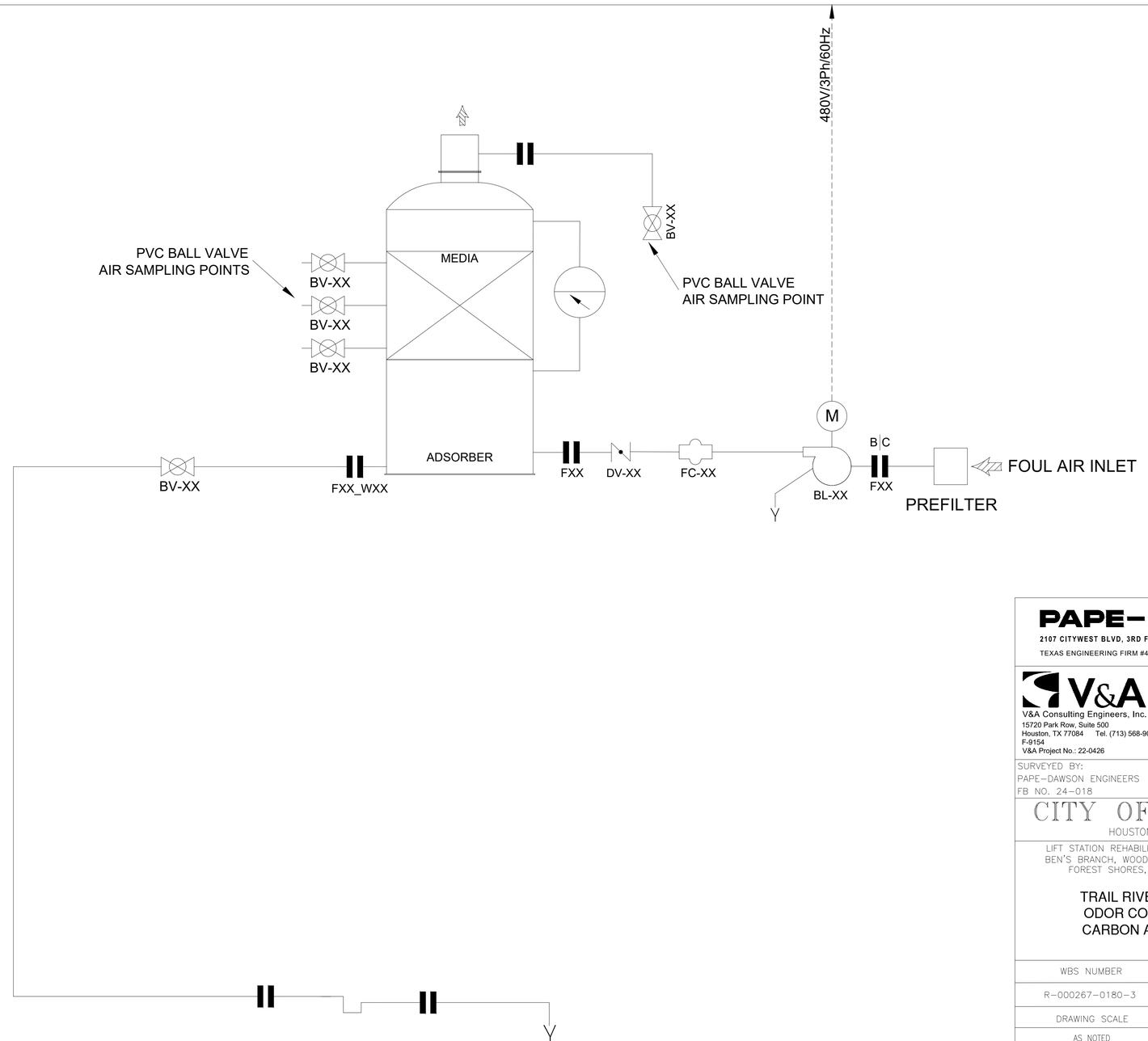

REVISION | NO. | DATE | APP.

PAPE-DAWSON
2107 CITYWEST BLVD, 3RD FLR I HOUSTON, TX 77042 I 713.428.2400
TEXAS ENGINEERING FIRM #470 I TEXAS SURVEYING FIRM #10028800

V&A Consulting Engineers, Inc.
15720 Park Row, Suite 500
Houston, TX 77084 Tel. (713) 568-9067
F-9154
V&A Project No.: 22-0426

SURVEYED BY:
PAPE-DAWSON ENGINEERS
FB NO. 24-018

INTERIM REVIEW ONLY
Document incomplete; not intended for regulatory approval, permit, or construction.
JAMES VAUGHAN HARSHMAN
Engineer
153247
Registration Number
09/02/2025
Date

V&A CONSULTING ENGINEERS, INC.
Texas Registered Engineering Firm
F-9154

CITY OF HOUSTON
HOUSTON PUBLIC WORKS

LIFT STATION REHABILITATION AND RECONSTRUCTION
BEN'S BRANCH, WOODLAND RIDGE, ELMWOOD HILLS,
FOREST SHORES, TRAIL RIVER, RIVERLAWN

TRAIL RIVER LIFT STATION
ODOR CONTROL SYSTEM
CARBON ADSORBER P&ID

WBS NUMBER	FOR CITY OF HOUSTON USE ONLY
R-000267-0180-3	
DRAWING SCALE	
AS NOTED	
CITY OF HOUSTON PM	
BRENDA JOHNSON P.E.	
SHEET NO. OF	

DWG No.
O-2

FILE PATH: E:\Projects\2022\0400 Thru 0499\22-0426 Var City Of Houston\500 Drawings\DESIGN\60%\60% Odor Sheets\06 Trail River\22-0426 Var City Of Houston Trail River Odor Control Detail.dwg

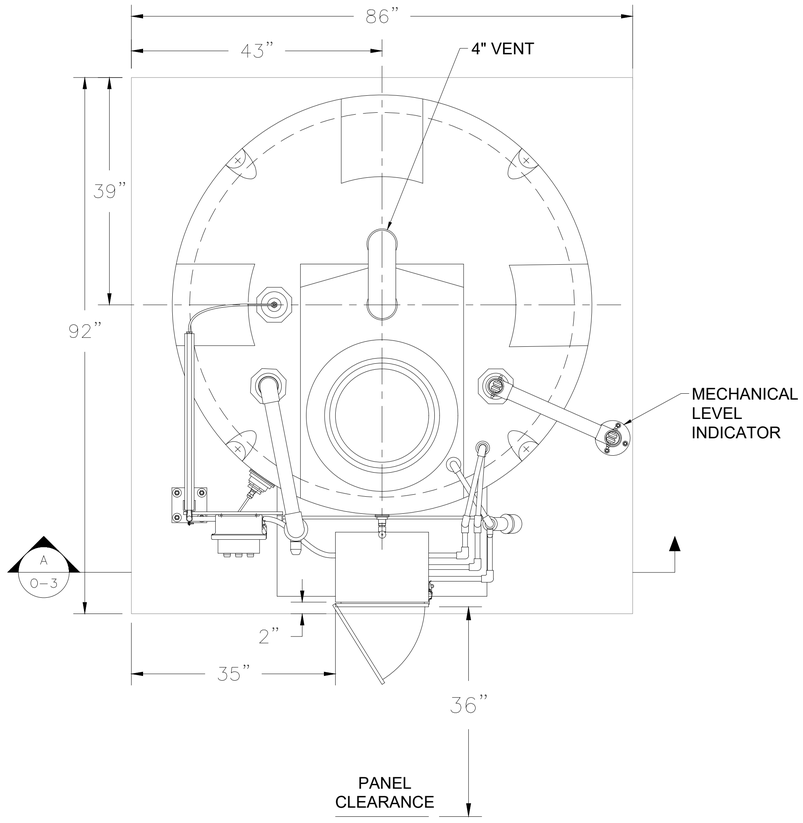

1 0-3 CHEMICAL FEED TANK – PLAN VIEW

SCALE

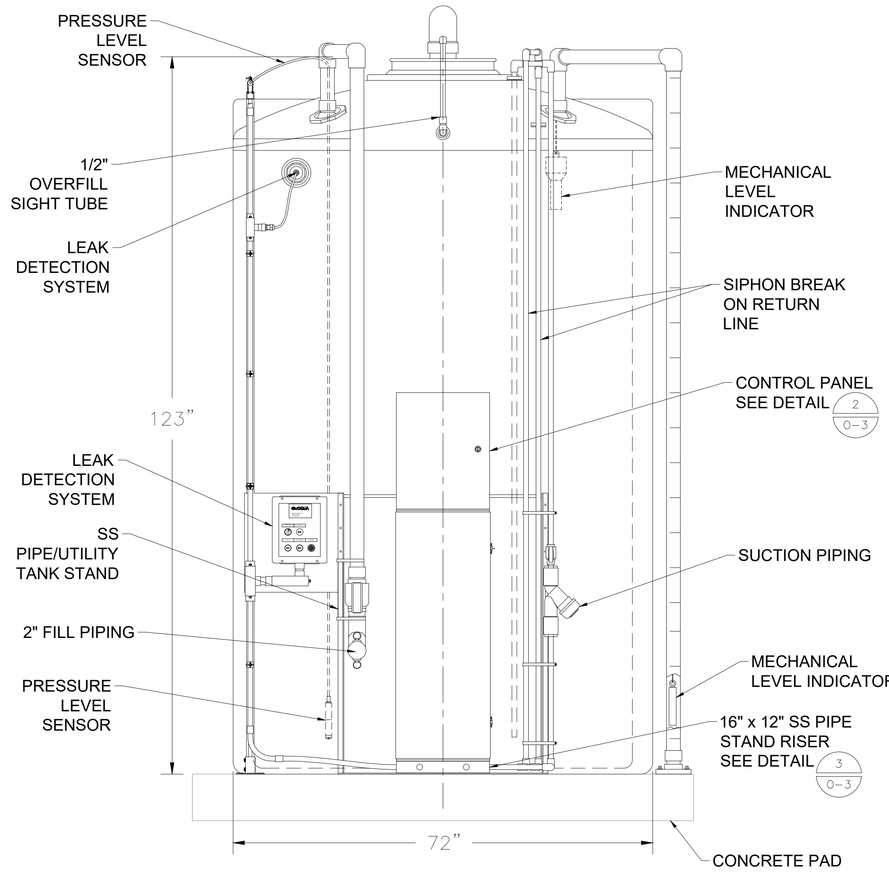

A 0-3 CHEMICAL FEED TANK – SECTION VIEW

SCALE

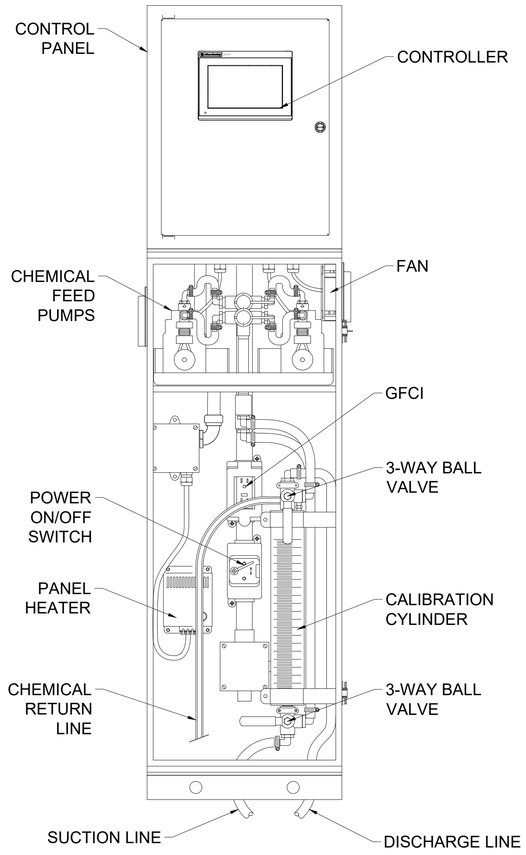

2 0-3 CHEMICAL FEED TANK CONTROL PANEL

NTS

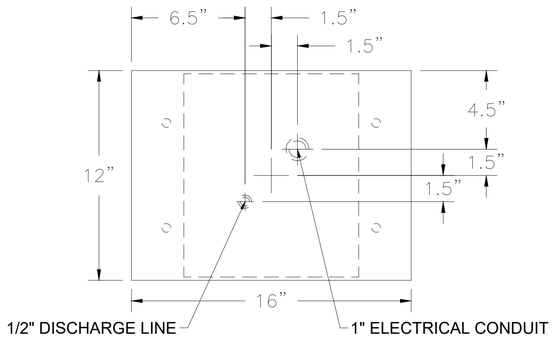

3 0-3 RISER/SLAB PENETRATION DETAIL

NTS

0' 1' 2' 3'

1" = 1'-0" (FULL)

DWG No. O-3

NO.	DATE	REVISION	APP.

PAPE-DAWSON

2107 CITYWEST BLVD, 3RD FLR I HOUSTON, TX 77042 I 713.428.2400

TEXAS ENGINEERING FIRM #470 I TEXAS SURVEYING FIRM #10028800

V&A

V&A Consulting Engineers, Inc.
15720 Park Row, Suite 500
Houston, TX 77084 Tel. (713) 568-9067
F-9154
V&A Project No.: 22-0426

INTERIM REVIEW ONLY
Document incomplete; not intended for regulatory approval, permit, or construction.
JAMES VAUGHAN HARSHMAN
License
153247
Registration Number
09/02/2025
Date

V&A CONSULTING ENGINEERS, INC.
Texas Registered Engineering Firm
F-9154

SURVEYED BY:
PAPE-DAWSON ENGINEERS
FB NO. 24-018

CITY OF HOUSTON
HOUSTON PUBLIC WORKS

LIFT STATION REHABILITATION AND RECONSTRUCTION
BEN'S BRANCH, WOODLAND RIDGE, ELMWOOD HILLS, FOREST SHORES, TRAIL RIVER, RIVERLAWN

TRAIL RIVER LIFT STATION ODOR CONTROL SYSTEM CHEMICAL FEED

WBS NUMBER	FOR CITY OF HOUSTON USE ONLY
R-000267-0180-3	
DRAWING SCALE	
AS NOTED	
CITY OF HOUSTON PM	
BRENDA JOHNSON P.E.	
SHEET NO. OF	

FILE PATH: E:\Projects\2022\0400 Thru 0499\22-0426 Var City Of Houston\500 Drawings\DESIGN\60%\60% Odor Sheets\06 Trail River\22-0426 Var City Of Houston Trail River Odor Control Detail.dwg

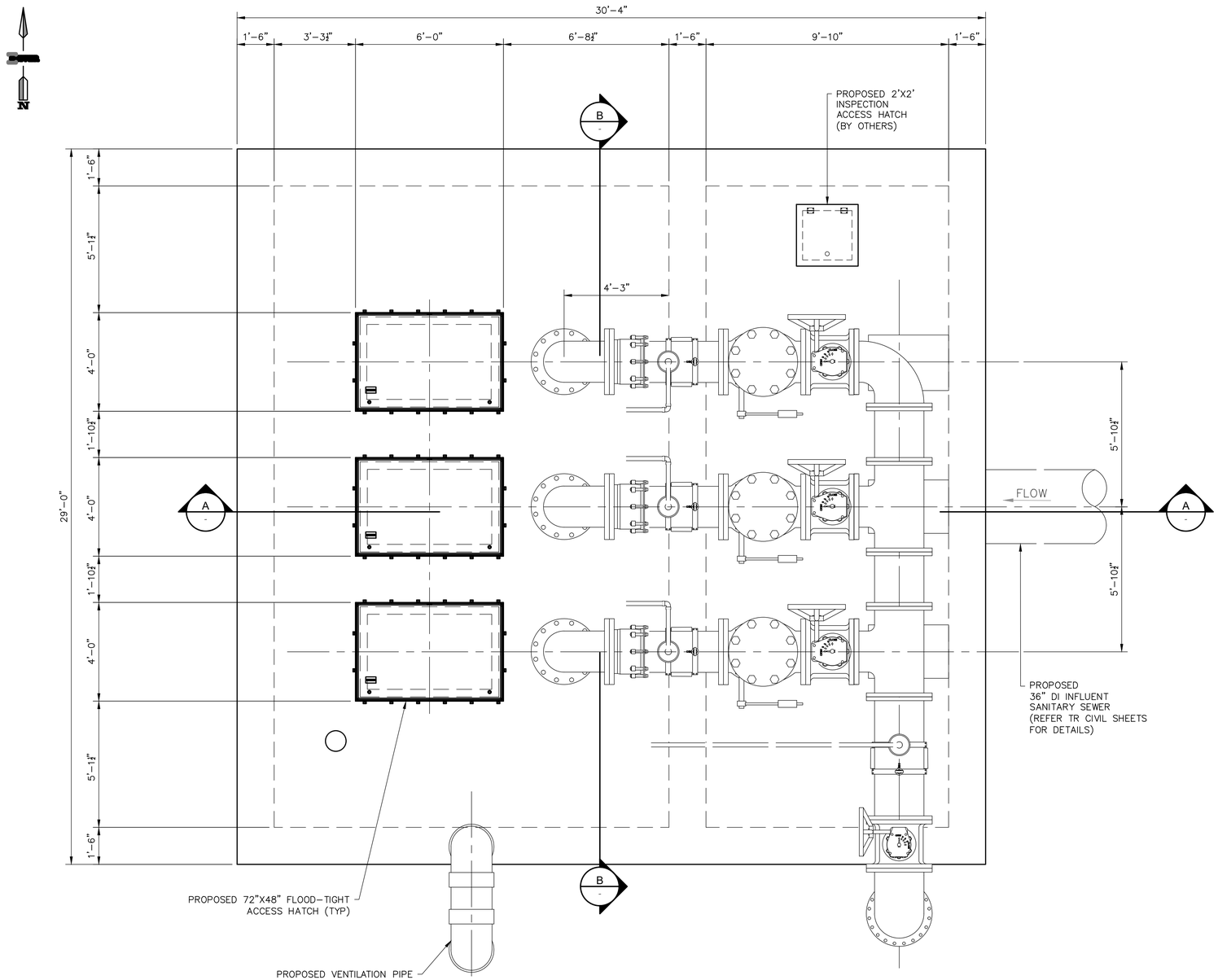

PLAN VIEW
SCALE: 1:30

STIVER ENGINEERING
1305 Peden Street
Houston, Texas 77006
P (713) 526-3478
stivereng.com
TX Registration No. F-190

PAPE-DAWSON
2107 CITYWEST BLVD, 3RD FLR I HOUSTON, TX 77042 I 713 428 4000
TEXAS ENGINEERING FIRM #470 I TEXAS SURVEYING FIRM #10028800

FOR INTERIM
THIS DOCUMENT IS RELEASED FOR THE PURPOSE OF INTERIM REVIEW UNDER THE AUTHORITY OF JOHN M. STIVER 105179 10/16/25
THIS DOCUMENT IS NOT INTENDED FOR BIDDING, PERMITTING AND/OR CONSTRUCTION PURPOSES
REVIEW ONLY

SURVEYED BY:
PAPE-DAWSON ENGINEERS
FB NO. 24-018

CITY OF HOUSTON
HOUSTON PUBLIC WORKS

LIFT STATION REHABILITATION AND RECONSTRUCTION
BEN'S BRANCH, WOODLAND RIDGE, ELMWOOD HILLS, FOREST SHORES, TRAIL RIVER, RIVERLAWN
STRUCTURAL

TRAIL RIVER TOP SLAB PLAN VIEW

WBS NUMBER	FOR CITY OF HOUSTON USE ONLY
R-000267-0180-3	
DRAWING SCALE	
1:30	
CITY OF HOUSTON PM	
BRENDA JOHNSON P.E.	
SHEET NO. 210 OF	

TR-S-01

FILE PATH: F:\SE\PROJECTS\2023 Projects\23154.2-Pape-Dawson-Amir Shokouhi-COH LS Rehab For 6 Lift Stations Pkg 2-Phase II Design\CADD FILES\23154.2 CADD\Trail River LS\23154.2_LIFT STATION_TRAIL RIVER.dwg

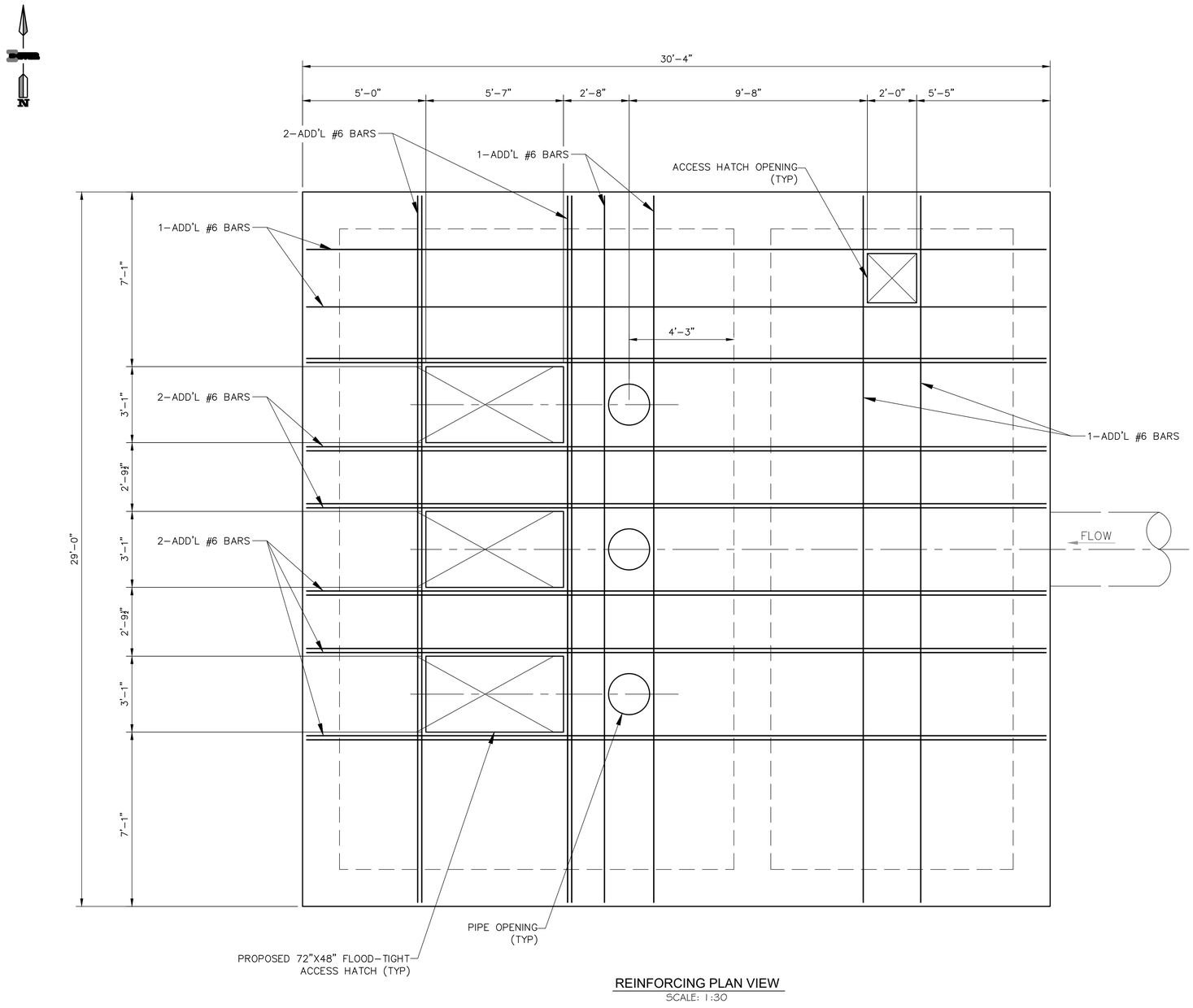

REINFORCING PLAN VIEW
SCALE: 1:30

STIVER ENGINEERING
1305 Peden Street
Houston, Texas 77006
P (713) 526-3478
stivereng.com
TX Registration No. F-190

PAPE-DAWSON
2107 CITYWEST BLVD, 3RD FLR I HOUSTON, TX 77042 I 713 953 4800
TEXAS ENGINEERING FIRM #470 I TEXAS SURVEYING FIRM #10028800

SURVEYED BY:
PAPE-DAWSON ENGINEERS
FB NO. 24-018

FOR INTERIM
THIS DOCUMENT IS RELEASED FOR THE PURPOSE OF INTERIM REVIEW UNDER THE AUTHORITY OF JOHN M. STIVER 105179 10/16/25
THIS DOCUMENT IS NOT INTENDED FOR BIDDING, PERMITTING AND/OR CONSTRUCTION PURPOSES
REVIEW ONLY

CITY OF HOUSTON
HOUSTON PUBLIC WORKS

LIFT STATION REHABILITATION AND RECONSTRUCTION
BEN'S BRANCH, WOODLAND RIDGE, ELMWOOD HILLS, FOREST SHORES, TRAIL RIVER, RIVERLAWN
STRUCTURAL

TRAIL RIVER
REINFORCING PLAN VIEW

WBS NUMBER	FOR CITY OF HOUSTON USE ONLY
R-000267-0180-3	
DRAWING SCALE	
1:30	
CITY OF HOUSTON PM	
BRENDA JOHNSON P.E.	
SHEET NO. 211 OF	

TR-S-02

FILE PATH: F:\SE\PROJECTS\2023 Projects\23154.2-Pape-Dawson-Amir Shokouhi-COH LS Rehab For 6 Lift Stations Pkg 2-Phase II Design\CADD FILES\23154.2 CADD\Trail River LS\23154.2_LIFT STATION_TRAIL RIVER.dwg

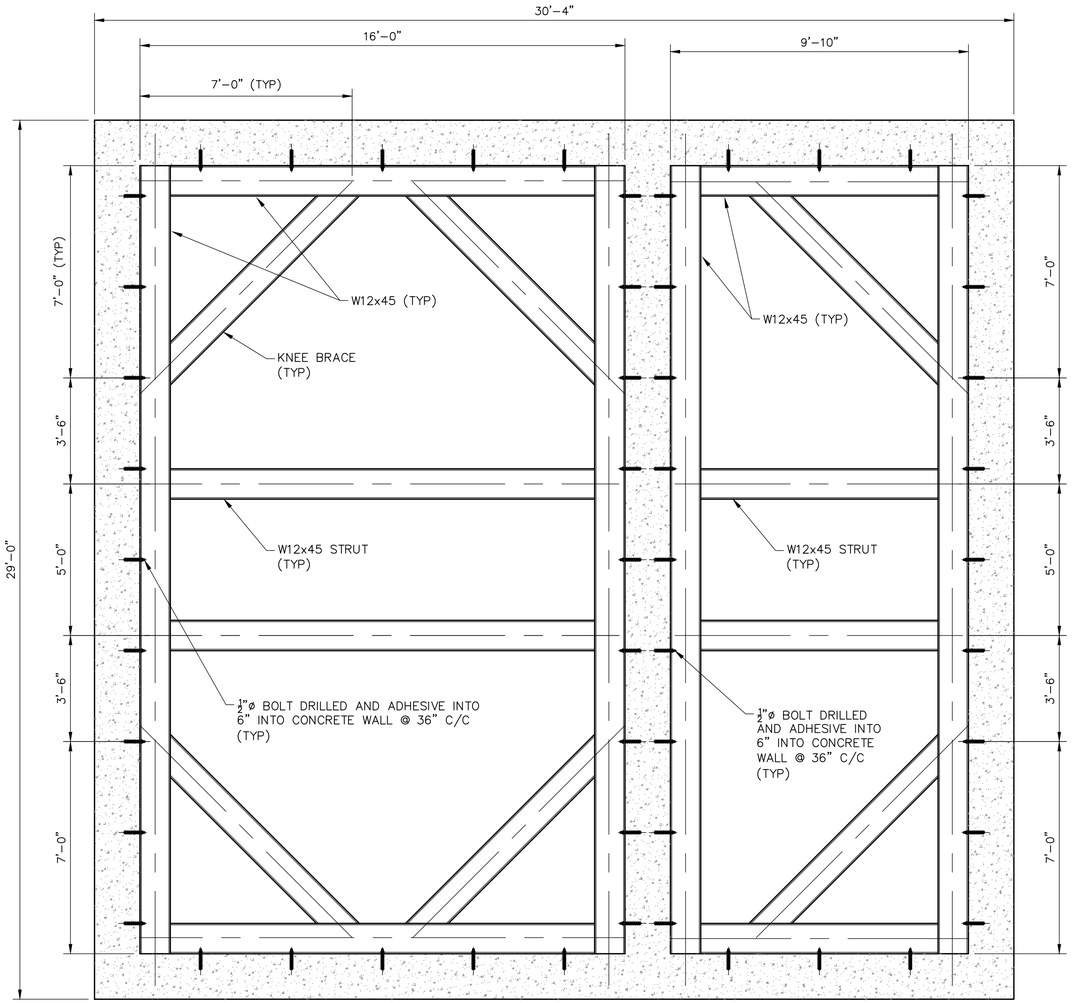

BRACING PLAN VIEW
SCALE: 1:30

STIVER ENGINEERING
1305 Peden Street
Houston, Texas 77006
P (713) 526-3478
stivereng.com
TX Registration No. F-190

PAPE-DAWSON
2107 CITYWEST BLVD, 3RD FLR I HOUSTON, TX 77042 I 713 428 4200
TEXAS ENGINEERING FIRM #470 I TEXAS SURVEYING FIRM #10028800

FOR INTERIM
THIS DOCUMENT IS RELEASED FOR THE PURPOSE OF INTERIM REVIEW UNDER THE AUTHORITY OF JOHN M. STIVER 105179 10/16/25 THIS DOCUMENT IS NOT INTENDED FOR BIDDING, PERMITTING AND/OR CONSTRUCTION PURPOSES
REVIEW ONLY

SURVEYED BY:
PAPE-DAWSON ENGINEERS
FB NO. 24-018

CITY OF HOUSTON
HOUSTON PUBLIC WORKS

LIFT STATION REHABILITATION AND RECONSTRUCTION
BEN'S BRANCH, WOODLAND RIDGE, ELMWOOD HILLS, FOREST SHORES, TRAIL RIVER, RIVERLAWN
STRUCTURAL

TRAIL RIVER
BRACING TOP SLAB

WBS NUMBER	FOR CITY OF HOUSTON USE ONLY
R-000267-0180-3	
DRAWING SCALE	
1:30	
CITY OF HOUSTON PM	
BRENDA JOHNSON P.E.	
SHEET NO. 212 OF	

TR-S-03

FILE PATH: F:\SEN\PROJECTS\2023 Projects\23154.2-Pape-Dawson-Amir Shokouhi-COH LS Rehab For 6 Lift Stations Pkg 2-Phase II Design\CADD FILES\23154.2 CADD\Trail River LS\23154.2_LIFT STATION_TRAIL RIVER.dwg

NOTE:

CONTRACTOR TO REFER MECHANICAL AND CIVIL DRAWINGS AND VERIFY ELEVATIONS, PIPE SIZES, PUMP AND PUMP HATCH DIMENSIONS.

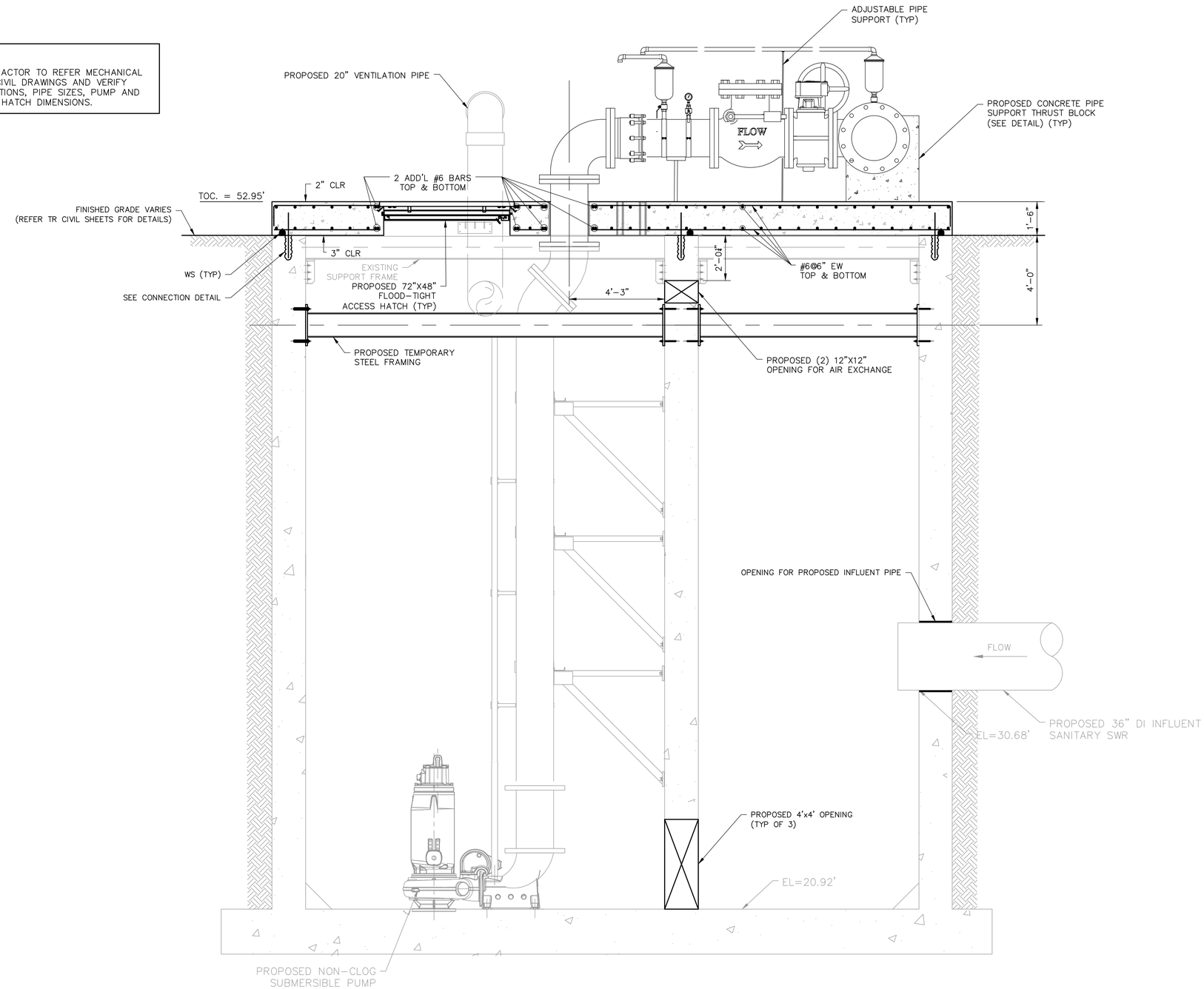

TR SECTION A
SCALE: 1:30

STIVER ENGINEERING
1305 Peden Street
Houston, Texas 77006
P (713) 526-3478
stivereng.com
TX Registration No. F-190

PAPE-DAWSON
2107 CITYWEST BLVD, 3RD FLR I HOUSTON, TX 77042 I 713 428 4000
TEXAS ENGINEERING FIRM #470 I TEXAS SURVEYING FIRM #10028800

FOR INTERIM
THIS DOCUMENT IS RELEASED FOR THE PURPOSE OF INTERIM REVIEW UNDER THE AUTHORITY OF JOHN M. STIVER
105179
10/16/25
THIS DOCUMENT IS NOT INTENDED FOR BIDDING, PERMITTING AND/OR CONSTRUCTION PURPOSES
REVIEW ONLY

SURVEYED BY:
PAPE-DAWSON ENGINEERS
FB NO. 24-018

CITY OF HOUSTON
HOUSTON PUBLIC WORKS

LIFT STATION REHABILITATION AND RECONSTRUCTION
BEN'S BRANCH, WOODLAND RIDGE, ELMWOOD HILLS, FOREST SHORES, TRAIL RIVER, RIVERLAWN
STRUCTURAL

TRAIL RIVER SECTION A

WBS NUMBER	FOR CITY OF HOUSTON USE ONLY
R-000267-0180-3	
DRAWING SCALE	
1:30	
CITY OF HOUSTON PM	
BRENDA JOHNSON P.E.	
SHEET NO. 213 OF	

TR-S-04

FILE PATH: F:\SE\PROJECTS\2023 Projects\23154.2-Pape-Dawson-Amir Shokouhi-COH LS Rehab For 6 Lift Stations Pkg 2-Phase II Design\CADD FILES\23154.2 CADD\Trail River LS\23154.2_LIFT STATION_TRAIL RIVER.dwg

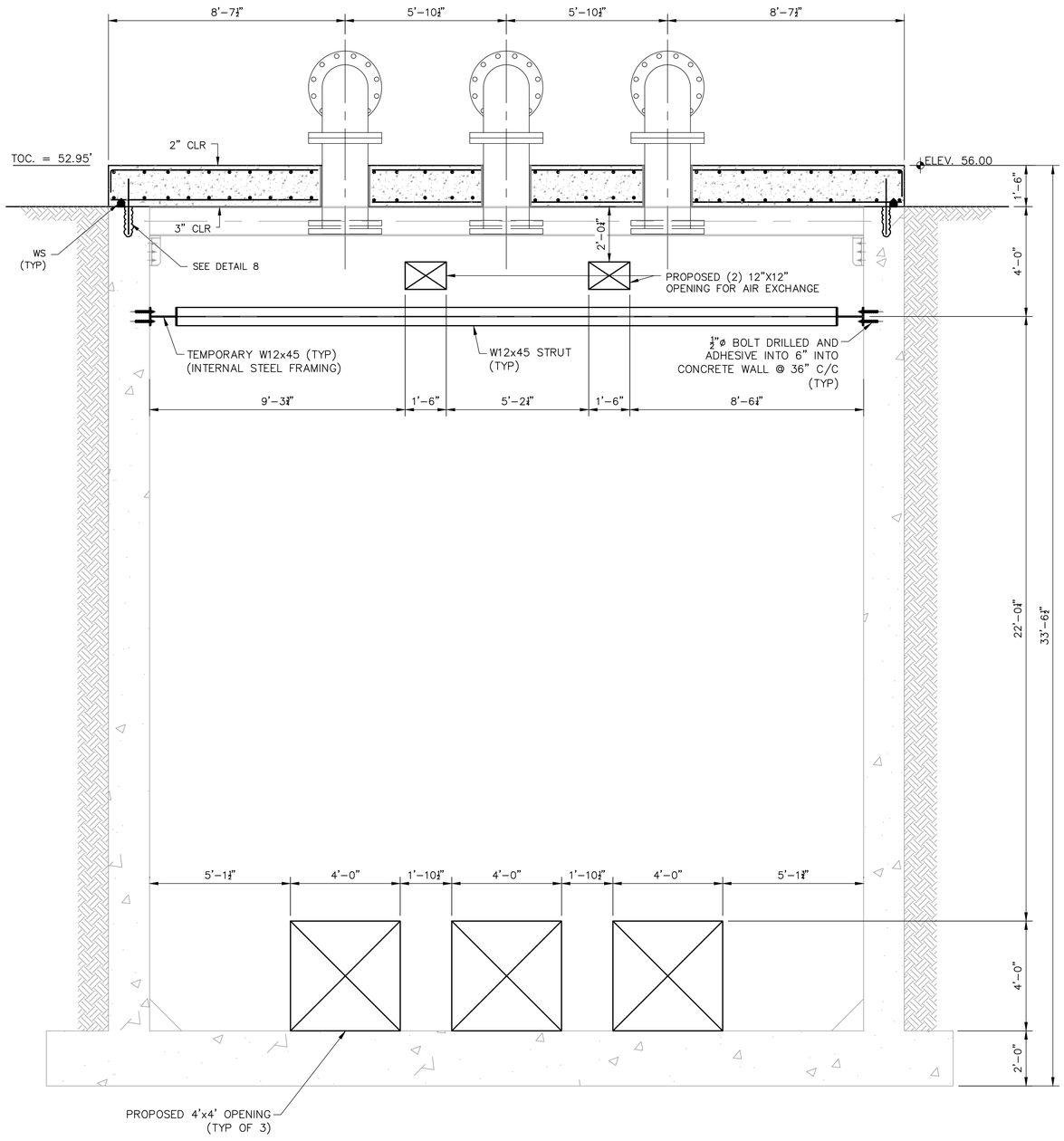

TR SECTION B
SCALE: 1:30

STIVER ENGINEERING
1305 Peden Street
Houston, Texas 77006
P (713) 526-3478
stivereng.com
TX Registration No. F-190

PAPE-DAWSON
2107 CITYWEST BLVD, 3RD FLR I HOUSTON, TX 77042 I 713 462 3178
TEXAS ENGINEERING FIRM #470 I TEXAS SURVEYING FIRM #10028800

FOR INTERIM
THIS DOCUMENT IS RELEASED FOR THE PURPOSE OF INTERIM REVIEW UNDER THE AUTHORITY OF JOHN M. STIVER 105179 10/16/25 THIS DOCUMENT IS NOT INTENDED FOR BIDDING, PERMITTING AND/OR CONSTRUCTION PURPOSES
REVIEW ONLY

SURVEYED BY:
PAPE-DAWSON ENGINEERS
FB NO. 24-018

CITY OF HOUSTON
HOUSTON PUBLIC WORKS

LIFT STATION REHABILITATION AND RECONSTRUCTION
BEN'S BRANCH, WOODLAND RIDGE, ELMWOOD HILLS,
FOREST SHORES, TRAIL RIVER, RIVERLAWN
STRUCTURAL

TRAIL RIVER
SECTION B

WBS NUMBER	FOR CITY OF HOUSTON USE ONLY
R-000267-0180-3	
DRAWING SCALE	
1:30	
CITY OF HOUSTON PM	
BRENDA JOHNSON P.E.	
SHEET NO. 214 OF	

TR-S-05

FILE PATH: F:\SE\PROJECTS\2023 Projects\23154.2-Pape-Dawson-Amir Shokouhi-COH LS Rehab For 6 Lift Stations Pkg 2-Phase II Design\CADD FILES\23154.2 CADD\Trail River LS\23154.2_LIFT STATION_TRAIL RIVER.dwg

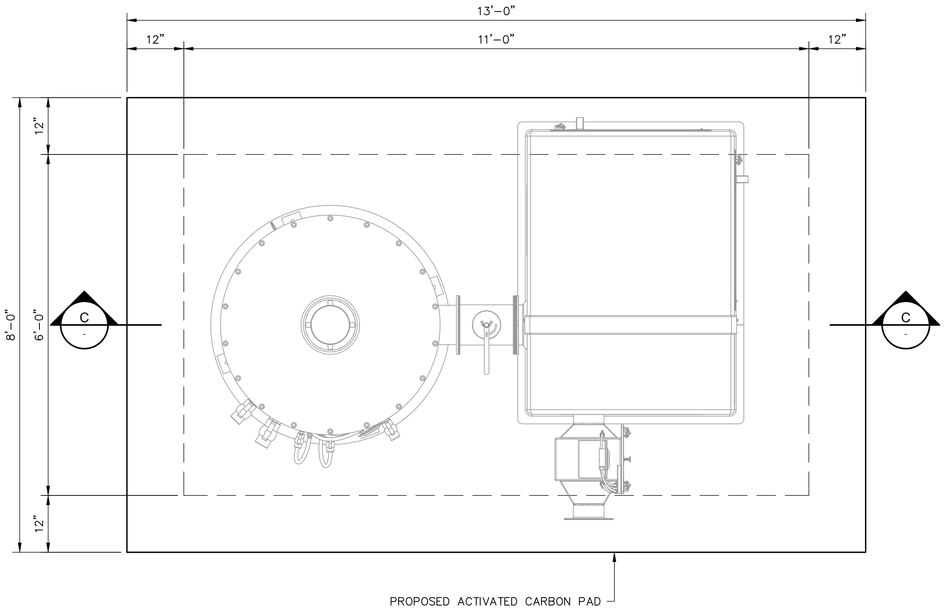

PLAN VIEW

SCALE: 3/4" = 1'-0"

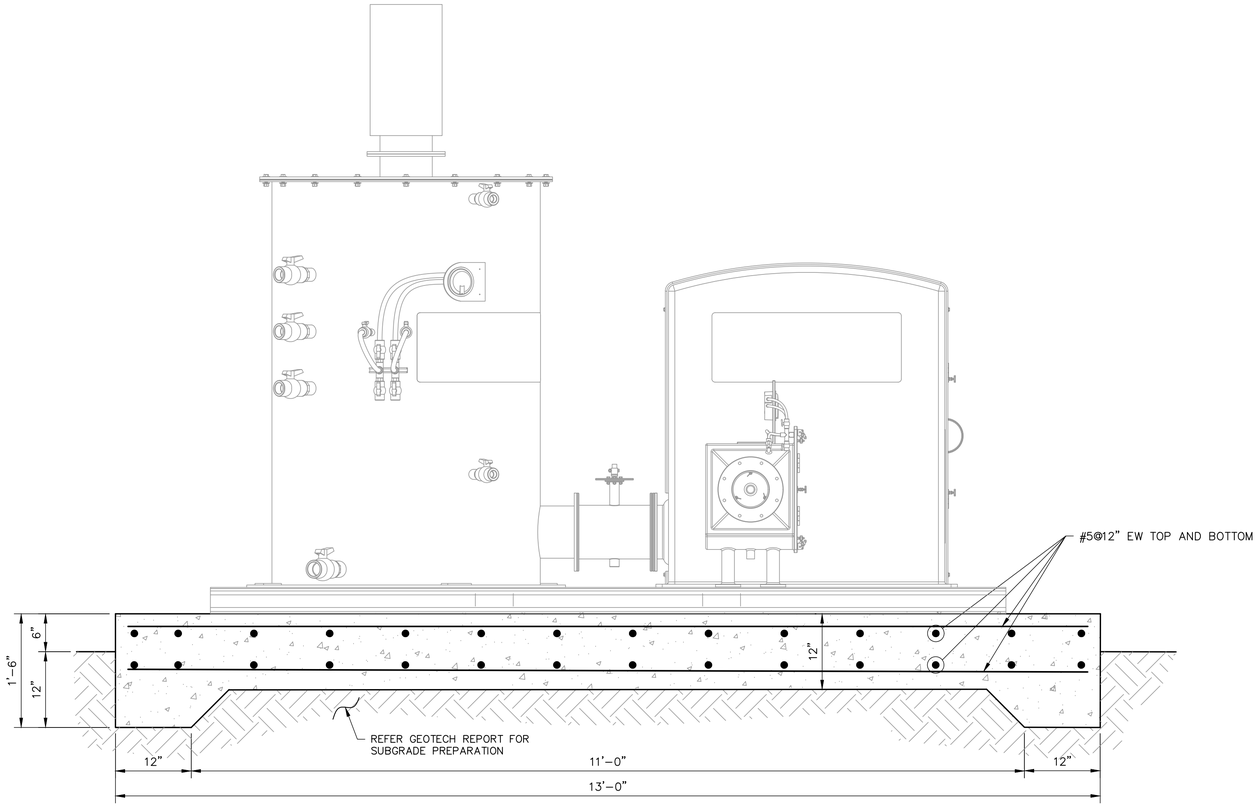

TR SECTION C

SCALE: 1" = 1'-0"

*PAD THICKNESS SUBJECT TO CHANGE, PENDING ANCHORAGE VERIFICATION.

STIVER ENGINEERING

1305 Peden Street
Houston, Texas 77006
P (713) 526-3478
stivereng.com
TX Registration No. F-190

PAPE-DAWSON

2107 CITYWEST BLVD, 3RD FLR I HOUSTON, TX 77042 I
7131428240
TEXAS ENGINEERING FIRM #470 I TEXAS SURVEYING FIRM #10028800

FOR INTERIM
THIS DOCUMENT IS RELEASED FOR THE PURPOSE OF INTERIM REVIEW UNDER THE AUTHORITY OF JOHN M. STIVER 105179 10/16/25
THIS DOCUMENT IS NOT INTENDED FOR BIDDING, PERMITTING AND/OR CONSTRUCTION PURPOSES
REVIEW ONLY

SURVEYED BY:
PAPE-DAWSON ENGINEERS
FB NO. 24-018

CITY OF HOUSTON

HOUSTON PUBLIC WORKS

LIFT STATION REHABILITATION AND RECONSTRUCTION
BEN'S BRANCH, WOODLAND RIDGE, ELMWOOD HILLS, FOREST SHORES, TRAIL RIVER, RIVERLAWN
STRUCTURAL

TRAIL RIVER
ODOR CONTROL PAD
PLAN VIEW AND SECTION C

WBS NUMBER	FOR CITY OF HOUSTON USE ONLY
R-000267-0180-3	
DRAWING SCALE	
1:30	
CITY OF HOUSTON PM	
BRENDA JOHNSON P.E.	
SHEET NO. 215 OF	

TR-S-06

FILE PATH: F:\SE\PROJECTS\2023 Projects\23154.2-Pape-Dawson-Amir Shokouhi-COH LS Rehab For 6 Lift Stations Pkg 2-Phase II Design\CADD FILES\23154.2 CADD\Trail River LS\23154.2_LIFT STATION_TRAIL RIVER.dwg

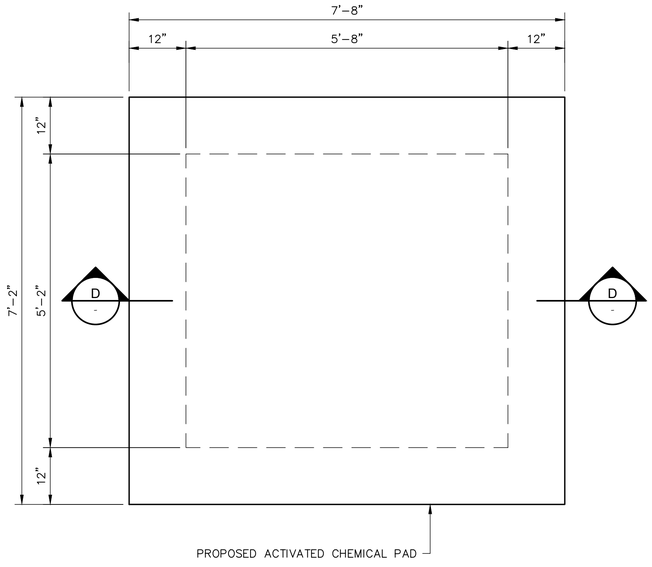

PLAN VIEW
SCALE: 3/4" = 1'-0"

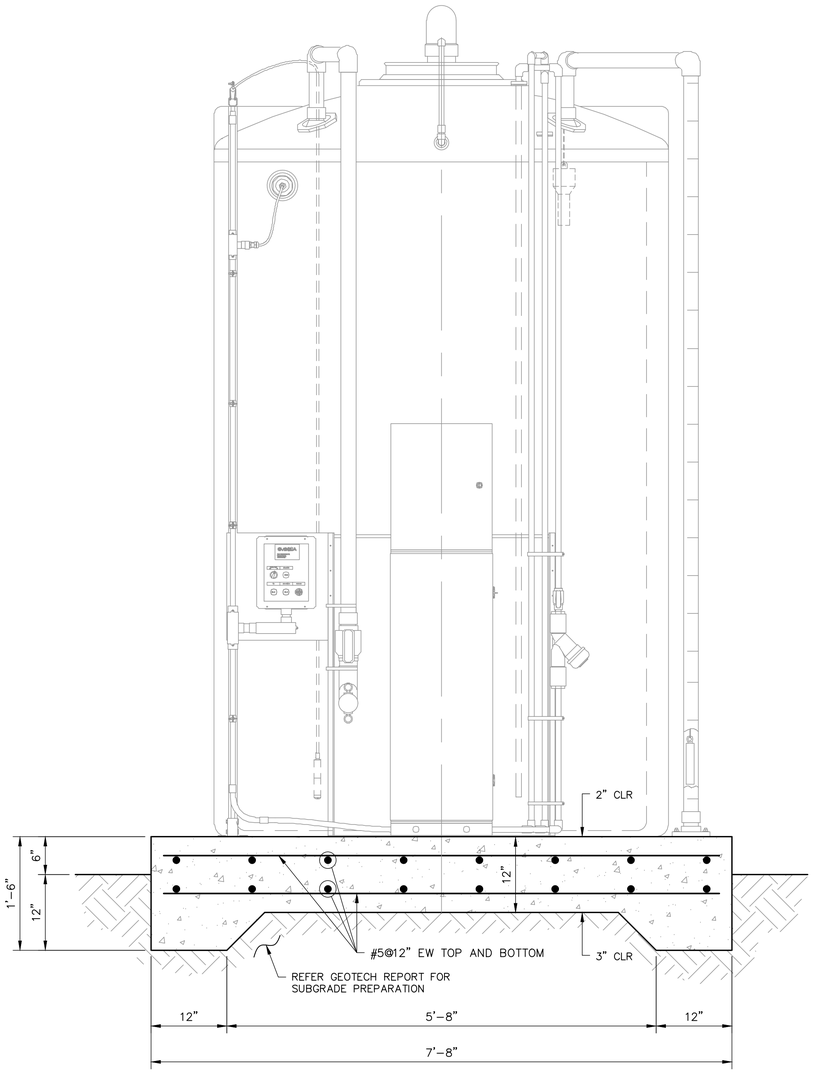

TR SECTION D
SCALE: 1" = 1'-0"

*PAD THICKNESS SUBJECT TO CHANGE, PENDING ANCHORAGE VERIFICATION.

STIVER ENGINEERING
1305 Peden Street
Houston, Texas 77006
P (713) 526-3478
stivereng.com
TX Registration No. F-190

PAPE-DAWSON
2107 CITYWEST BLVD, 3RD FLR I HOUSTON, TX 77042 I 713 462 4200
TEXAS ENGINEERING FIRM #470 I TEXAS SURVEYING FIRM #10028800

FOR INTERIM
THIS DOCUMENT IS RELEASED FOR THE PURPOSE OF INTERIM REVIEW UNDER THE AUTHORITY OF JOHN M. STIVER 105179 10/16/25 THIS DOCUMENT IS NOT INTENDED FOR BIDDING, PERMITTING AND/OR CONSTRUCTION PURPOSES
REVIEW ONLY

SURVEYED BY:
PAPE-DAWSON ENGINEERS
FB NO. 24-018

CITY OF HOUSTON
HOUSTON PUBLIC WORKS

LIFT STATION REHABILITATION AND RECONSTRUCTION
BEN'S BRANCH, WOODLAND RIDGE, ELMWOOD HILLS, FOREST SHORES, TRAIL RIVER, RIVERLAWN
STRUCTURAL

TRAIL RIVER
CHEMICAL INJECTION PAD
PLAN VIEW AND SECTION D

WBS NUMBER	FOR CITY OF HOUSTON USE ONLY
R-000267-0180-3	
DRAWING SCALE	
1:30	
CITY OF HOUSTON PM	
BRENDA JOHNSON P.E.	
SHEET NO. 216 OF	

TR-S-07

FILE PATH: F:\SE\PROJECTS\2023 Projects\23154.2-Pape-Dawson-Amir Shokouhi-COH LS Rehab For 6 Lift Stations Pkg 2-Phase II Design\CADD FILES\23154.2 CADD\Trail River LS\23154.2_LIFT STATION_TRAIL RIVER.dwg

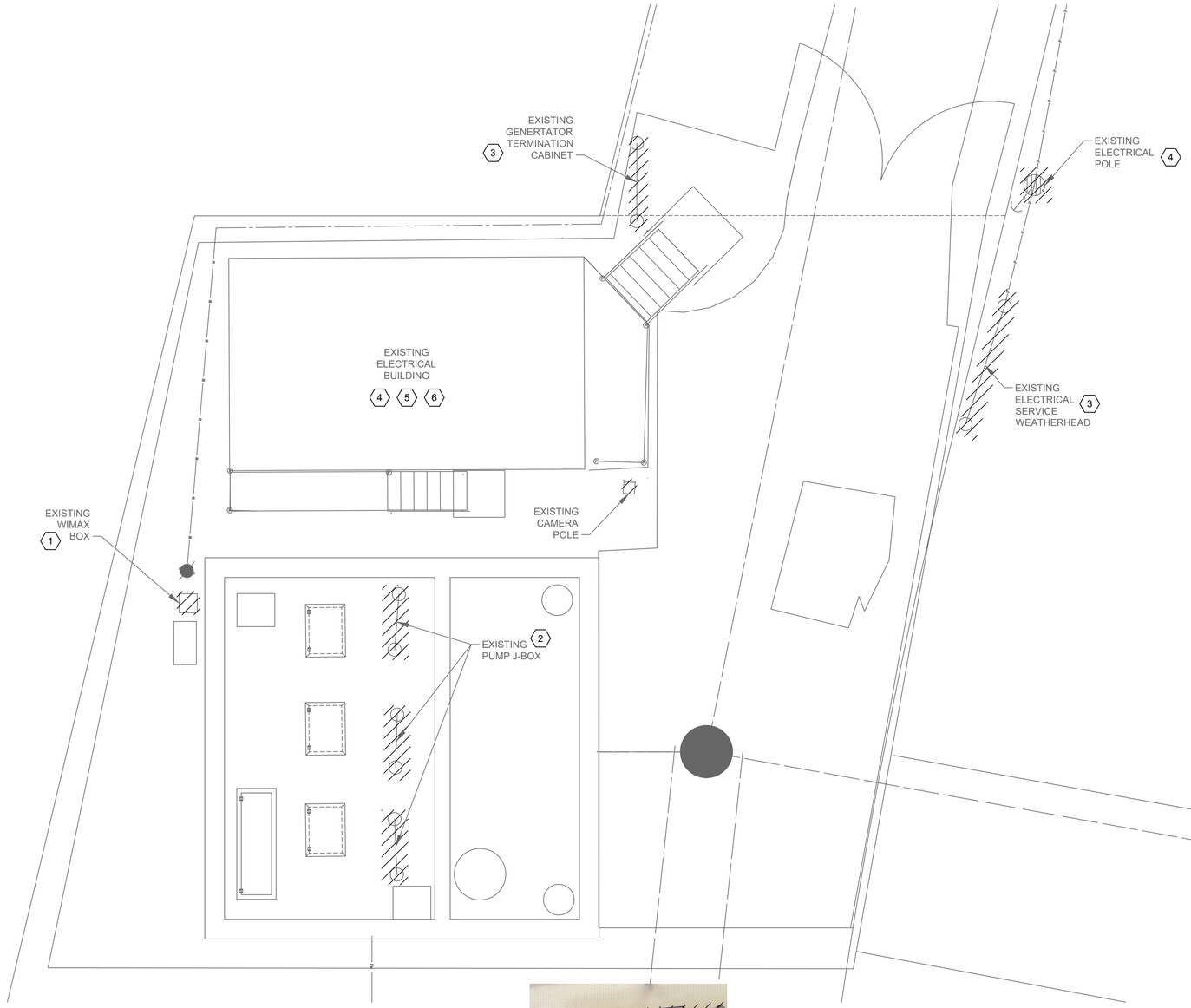

TRAIL RIVER ELECTRICAL DEMOLITION SITE

PLAN

1"= 5'-0"

NOTES BY SYMBOL "⟨#⟩":

1. EXISTING WIMAX BOX, AND ASSOCIATED CONDUITS TO BE DEMOLISHED AND REMOVED.
2. EXISTING PUMP J-BOXES, AND ASSOCIATED CONDUITS TO BE DEMOLISHED AND REMOVED.
3. EXISTING GENERATOR TERMINATION CABINET AND ASSOCIATED CONDUITS/WIRES TO BE DEMOLISHED AND REMOVED.
4. EXISTING LIFT STATION CONTROL CABINET AND ASSOCIATED CONDUITS/WIRES TO BE DEMOLISHED AND REMOVED.
5. EXISTING VFD'S FOR LIFT PUMPS AND ASSOCIATED CONDUITS/WIRES TO BE DEMOLISHED AND REMOVED.

EXISTING CAMERA POLE

PHOTOGRAPH A (-) — NTS

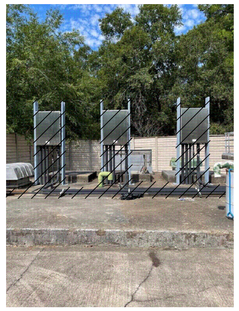

EXISTING PUMP JUNCTION BOX

PHOTOGRAPH B (-) — NTS — 2

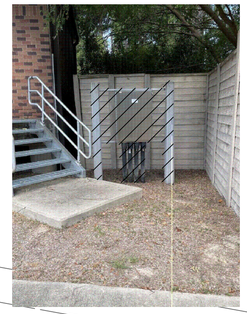

EXISTING GENERATOR TERMINATION CABINET

PHOTOGRAPH C (-) — NTS — 3

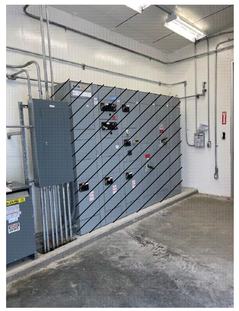

EXISTING MCC-1

PHOTOGRAPH D (-) — NTS — 4

EXISTING LIFT STATION CONTROL CABINET

PHOTOGRAPH E (-) — NTS — 4

EXISTING VFD FOR LIFT PUMP NO.1

PHOTOGRAPH F (-) — NTS — 6

EXISTING VFD FOR LIFT PUMP NO.1 & NO.2

PHOTOGRAPH G (-) — NTS — 6

NO.	DATE	REVISION	APP.

SCALE: 1"= 5'

0' 5' 10' 15'

NOTICE:
FOR YOUR SAFETY, YOU ARE REQUIRED BY TEXAS LAW TO CALL 811 AT LEAST 48 HOURS BEFORE YOU DIG SO THAT UNDERGROUND LINES CAN BE MARKED. THIS SIGNATURE DOES NOT FULFILL YOUR OBLIGATION TO CALL 811

VERIFICATION OF PRIVATE UTILITY LINES

Date

CenterPoint Energy natural gas utilities shown. (Gas service lines are not shown). This signature not be used for conflict verification.

Signature valid for six months.

Date

CenterPoint Energy/UNDERGROUND Electrical Facilities Verification ONLY. (This signature verifies existing underground facilities – not to be used for conflict verification)

Signature valid for six months.

Date

Approved for AT&T underground conduit facilities only.
Signature valid for one year.

PAPE–DAWSON
2107 CITYWEST BLVD, 3RD FLR I HOUSTON, TX 77042 I 713.428.2400
TEXAS ENGINEERING FIRM #470 I TEXAS SURVEYING FIRM #10028800

GAI
Gupta & Associates, Inc.
CONSULTING ENGINEERING
Registration No. F-2593
302 Dennis St.
Houston, Texas 77006
Tel: 713-636-2936
Fax: 713-636-2987
email: hforouzan@gaiconsulting.com

THIS DOCUMENT IS RELEASED FOR INTERIM REVIEW UNDER THE AUTHORIZATION OF HOSS FOROUZAN, P.E. (#77748) AND IS **NOT TO BE USED FOR CONSTRUCTION.**

SURVEYED BY:
PAPE–DAWSON ENGINEERS
FB NO. 24–018

CITY OF HOUSTON
HOUSTON PUBLIC WORKS

LIFT STATION REHABILITATION AND RECONSTRUCTION
BEN'S BRANCH, WOODLAND RIDGE, ELMWOOD HILLS, FOREST SHORES, TRAIL RIVER, RIVERLAWN

ELECTRICAL

TRAIL RIVER LIFT STATION ELECTRICAL EXISTING SITE PLAN

WBS NUMBER	FOR CITY OF HOUSTON USE ONLY
R–000267–0180–3	
DRAWING SCALE	
AS NOTED	
CITY OF HOUSTON PM	
BRENDA JOHNSON P.E.	
SHEET NO. XX OF XX	

TR–E–01

FILE PATH: O:\H8107_Lift Station Rehabilitation And Reconstruction (Pape Dawson)\6 Drawings\Electrical\Working\Trail River\H8107_TR–E–01.dwg

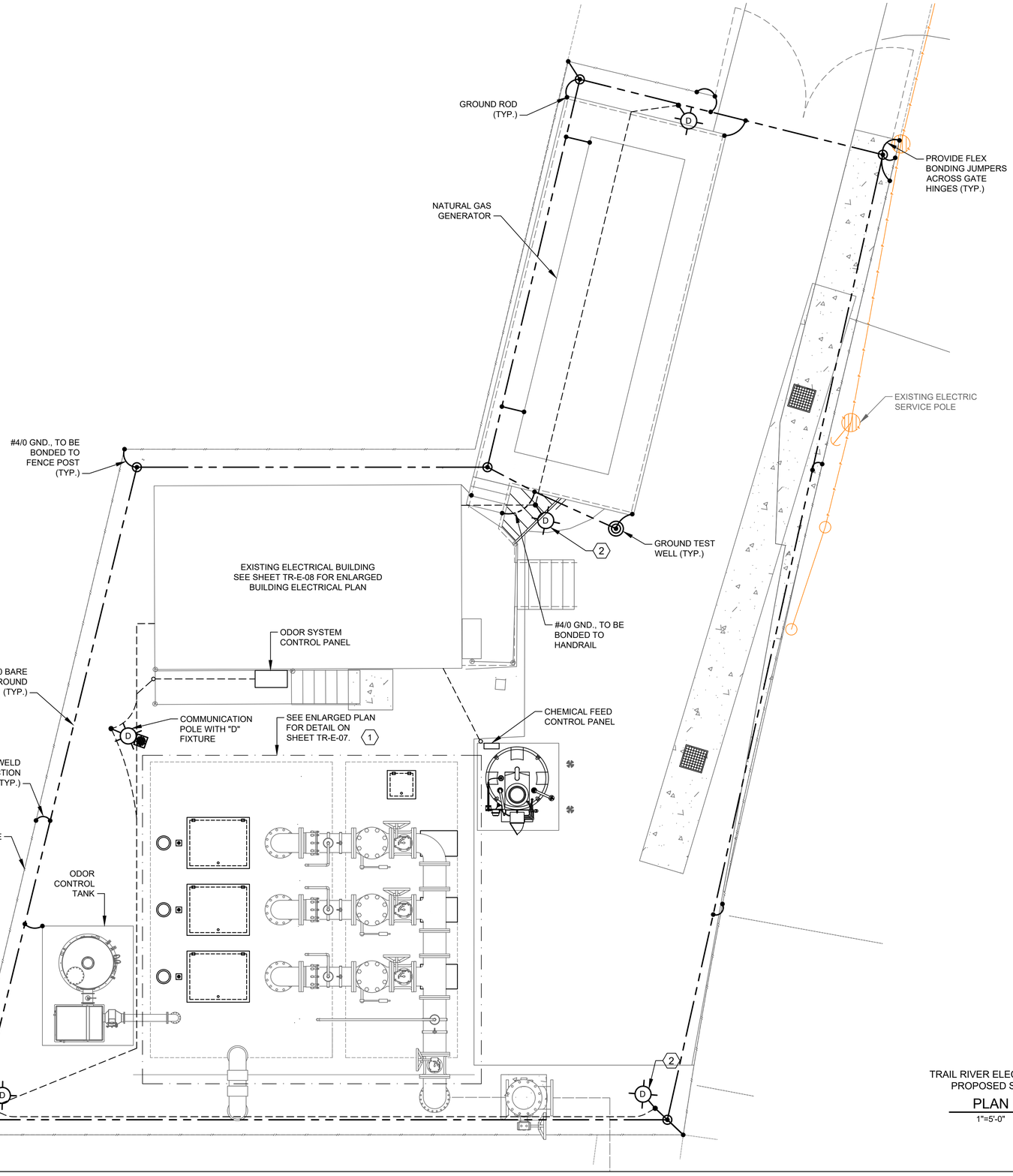

TRAIL RIVER ELECTRICAL
PROPOSED SITE
PLAN
1"=5'-0"

NOTES BY SYMBOL "⟨#⟩":

1. THE ELECTRICAL INSTALLATION IN THE WET WELL SHALL BE EXPLOSION PROOF, IN ACCORDANCE WITH THE NATIONAL ELECTRICAL CODE FOR CLASS I, DIVISION 1 LOCATIONS.
2. YARD LIGHT CONTROLLED BY LIGHTING SWITCH.
3. INSIDE WETWELL RATED NEMA CLASS 1, DIV. 1. OUTSIDE ABOVE GROUND, AROUND WETWELL RATED CLASS 1, DIV. 2 ACCORDING TO NFPA 820.
4. GROUNDING LOOP SHALL BE BURIED 30" BELOW FINISHED GRADE.

NO.	DATE	REVISION	APP.

SCALE: 1"= 5'

0' 5' 10' 15'

NOTICE:
FOR YOUR SAFETY, YOU ARE REQUIRED BY TEXAS LAW TO CALL 811 AT LEAST 48 HOURS BEFORE YOU DIG SO THAT UNDERGROUND LINES CAN BE MARKED. THIS SIGNATURE DOES NOT FULFILL YOUR OBLIGATION TO CALL 811

VERIFICATION OF PRIVATE UTILITY LINES

Date

CenterPoint Energy natural gas utilities shown. (Gas service lines are not shown). This signature not be used for conflict verification.

Signature valid for six months.

Date

CenterPoint Energy/UNDERGROUND Electrical Facilities Verification ONLY. (This signature verifies existing underground facilities – not to be used for conflict verification)

Signature valid for six months.

Date

Approved for AT&T underground conduit facilities only.
Signature valid for one year.

PAPE–DAWSON
2107 CITYWEST BLVD, 3RD FLR I HOUSTON, TX 77042 I 713.428.2400
TEXAS ENGINEERING FIRM #470 I TEXAS SURVEYING FIRM #10028800

GAI
Gupta & Associates, Inc.
CONSULTING ENGINEERING
Registration No. F-2593
302 Dennis St.
Houston, Texas 77006
Tel: 713-636-2936
Fax: 713-636-2987
email: hforouzan@guiconsulting.com

THIS DOCUMENT IS RELEASED FOR INTERIM REVIEW UNDER THE AUTHORIZATION OF HOSS FOROUZAN, P.E. (#77748) AND IS **NOT TO BE USED FOR CONSTRUCTION.**

SURVEYED BY:
PAPE–DAWSON ENGINEERS
FB NO. 24–018

CITY OF HOUSTON
HOUSTON PUBLIC WORKS

LIFT STATION REHABILITATION AND RECONSTRUCTION
BEN'S BRANCH, WOODLAND RIDGE, ELMWOOD HILLS, FOREST SHORES, TRAIL RIVER, RIVERLAWN

ELECTRICAL

TRAIL RIVER LIFT STATION ELECTRICAL PROPOSED SITE PLAN

WBS NUMBER	FOR CITY OF HOUSTON USE ONLY
R–000267–0180–3	
DRAWING SCALE	
AS NOTED	
CITY OF HOUSTON PM	
BRENDA JOHNSON P.E.	
SHEET NO. XX OF XX	

TR–E–02

FILE PATH: O:\H8107_Lift Station Rehabilitation And Reconstruction (Pape Dawson)\6 Drawings\Electrical\Working\Trail River\H8107_TR–E–02.dwg

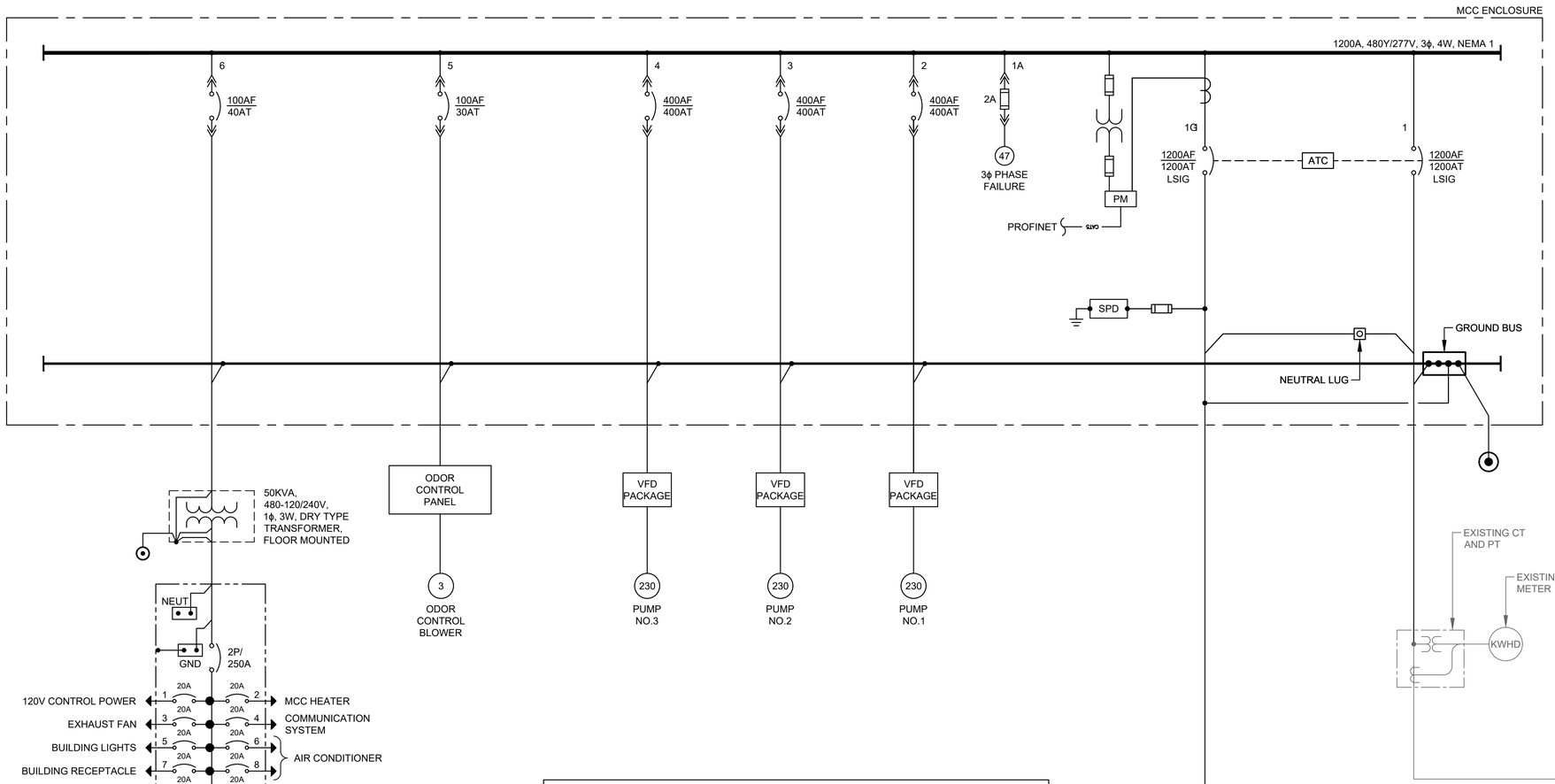

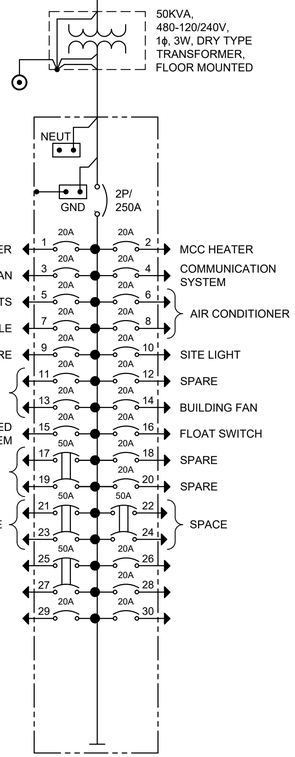

LOAD CALCULATION					
ITEM	DESCRIPTION	HP	FLA*	NORM. (KVA)	GEN. (KVA)
1	PUMP NO. 1	230 HP	280 A	232.5 KVA	232.5 KVA
2	PUMP NO. 2	230 HP	280 A	232.5 KVA	232.5 KVA
3	PUMP NO. 3 (STANDBY)	230 HP	-- A	-- KVA	-- KVA
3	ODOR CONTROL	-- HP	15 A	12.5 KVA	12.5 KVA
4	25 KVA TRANSFORMER		52.1 A	25 KVA	25 KVA
SUBTOTAL			627.1 A	502.5 KVA	502.5 KVA
25% OF LARGEST MOTOR LOAD			70 A		
MINIMUM AMPACITY @480V,3ϕ			697.1 A		

* BASED ON SELECTED PUMP MFG DATA

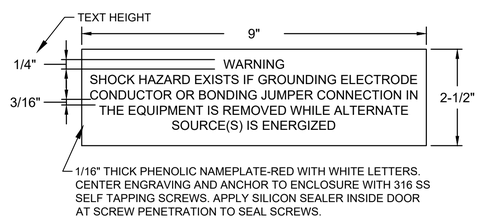

ELECTRICAL WARNING NAMEPLATE N-EW ENGRAVING

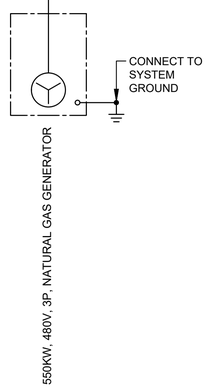

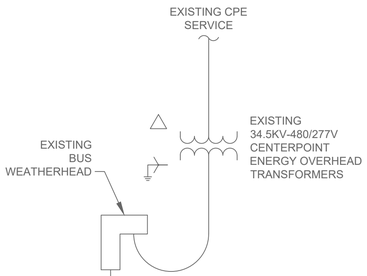

NO.	DATE	REVISION	APP.

NOTICE:
FOR YOUR SAFETY, YOU ARE REQUIRED BY TEXAS LAW TO CALL 811 AT LEAST 48 HOURS BEFORE YOU DIG SO THAT UNDERGROUND LINES CAN BE MARKED. THIS SIGNATURE DOES NOT FULFILL YOUR OBLIGATION TO CALL 811

VERIFICATION OF PRIVATE UTILITY LINES

Date

CenterPoint Energy natural gas utilities shown. (Gas service lines are not shown). This signature not be used for conflict verification.

Signature valid for six months.

Date

CenterPoint Energy/UNDERGROUND Electrical Facilities Verification ONLY. (This signature verifies existing underground facilities – not to be used for conflict verification)

Signature valid for six months.

Date

Approved for AT&T underground conduit facilities only.
Signature valid for one year.

PAPE–DAWSON
2107 CITYWEST BLVD, 3RD FLR I HOUSTON, TX 77042 I 713.428.2400
TEXAS ENGINEERING FIRM #470 I TEXAS SURVEYING FIRM #10028800

GAI
Gupta & Associates, Inc.
CONSULTING ENGINEERING
Registration No. F-2593
302 Dennis St.
Houston, Texas 77006
Tel: 713-636-2936
Fax: 713-636-2987
email: hforouzan@gaiconsulting.com

SURVEYED BY:
PAPE–DAWSON ENGINEERS
FB NO. 24–018

THIS DOCUMENT IS RELEASED FOR INTERIM REVIEW UNDER THE AUTHORIZATION OF HOSS FOROUZAN, P.E. (#77746) AND IS **NOT TO BE USED FOR CONSTRUCTION.**

CITY OF HOUSTON
HOUSTON PUBLIC WORKS

LIFT STATION REHABILITATION AND RECONSTRUCTION
BEN'S BRANCH, WOODLAND RIDGE, ELMWOOD HILLS, FOREST SHORES, TRAIL RIVER, RIVERLAWN

ELECTRICAL

TRAIL RIVER LIFT STATION ELECTRICAL ONE–LINE DIAGRAM

WBS NUMBER	FOR CITY OF HOUSTON USE ONLY
R–000267–0180–3	
DRAWING SCALE	
AS NOTED	
CITY OF HOUSTON PM	
BRENDA JOHNSON P.E.	
SHEET NO. XX OF XX	

TR–E–03

FILE PATH: O:\H8107_Lift Station Rehabilitation And Reconstruction (Pape Dawson)\6 Drawings\Electrical\Working\Trail River\H8107_TR–E–03.dwg

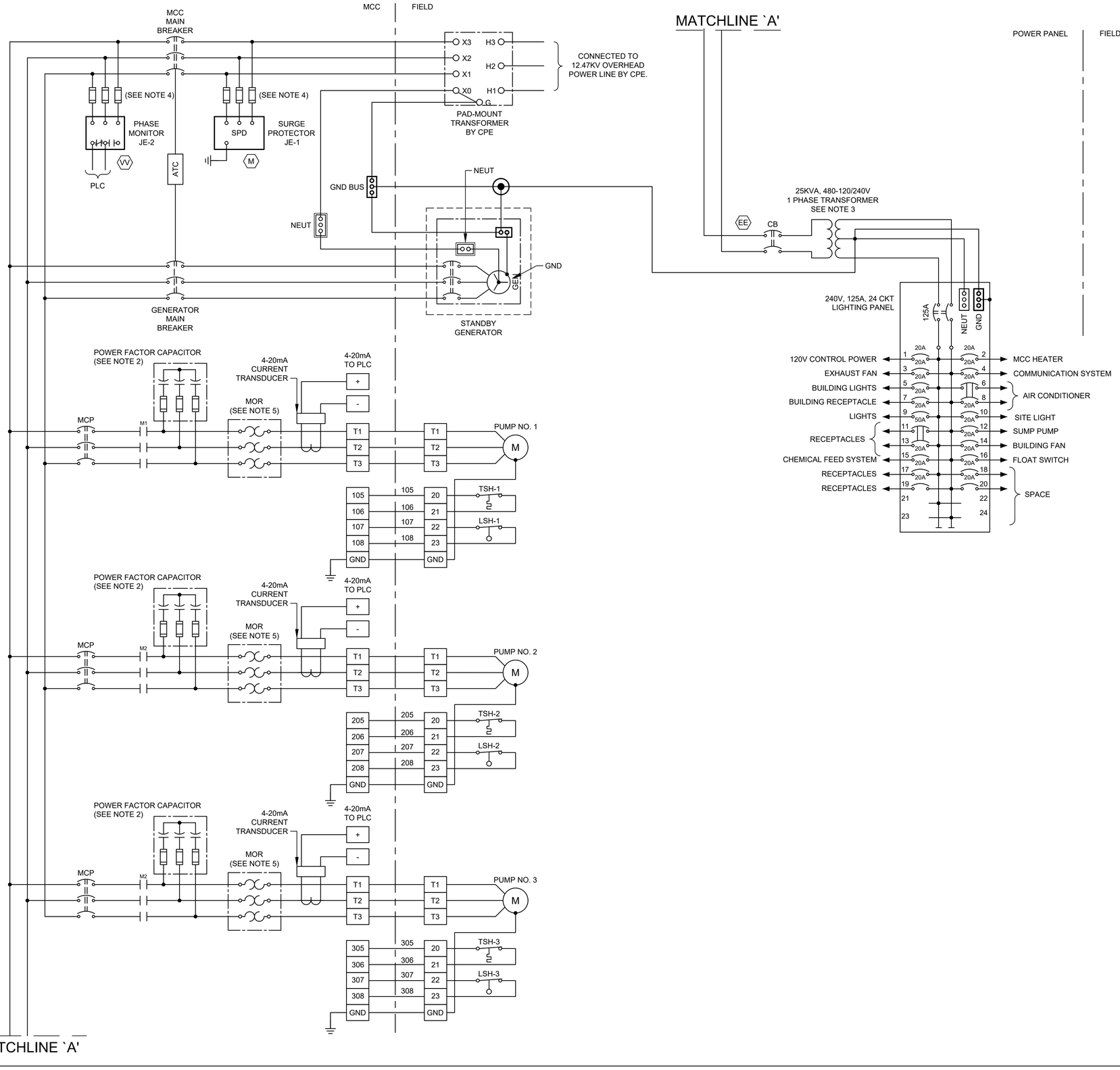

NOTES:

1. UNLESS OTHERWISE INDICATE, ALL DEVICES WITHOUT FURTHER DESIGNATION ARE LOCATED AT THE CONTROL PANEL.
2. CONTRACTOR TO COORDINATE POWER FACTOR CORRECTION CAPACITOR SIZE WITH PUMP MANUFACTURER.
3. CONTRACTOR SHALL TERMINATE POWER & CONTROL WIRES PER MANUFACTURER'S REQUIREMENTS.
4. PROVIDE FUSE SIZE ACCORDING TO MANUFACTURER'S REQUIREMENTS.
5. THE COMBINATION OF CT AND MOTOR OVERLOAD RELAY IF REQUIRED.

NO.	DATE	REVISION	APP.

NOTICE:
FOR YOUR SAFETY, YOU ARE REQUIRED BY TEXAS LAW TO CALL 811 AT LEAST 48 HOURS BEFORE YOU DIG SO THAT UNDERGROUND LINES CAN BE MARKED. THIS SIGNATURE DOES NOT FULFILL YOUR OBLIGATION TO CALL 811

VERIFICATION OF PRIVATE UTILITY LINES

Date

CenterPoint Energy natural gas utilities shown. (Gas service lines are not shown). This signature not be used for conflict verification.

Signature valid for six months.

Date

CenterPoint Energy/UNDERGROUND Electrical Facilities Verification ONLY. (This signature verifies existing underground facilities – not to be used for conflict verification)

Signature valid for six months.

Date

Approved for AT&T underground conduit facilities only.
Signature valid for one year.

PAPE–DAWSON
2107 CITYWEST BLVD, 3RD FLR I HOUSTON, TX 77042 I 713.428.2400
TEXAS ENGINEERING FIRM #470 I TEXAS SURVEYING FIRM #10028800

GAI
Gupta & Associates, Inc.
CONSULTING ENGINEERING
Registration No. F-2593
302 Dennis St.
Houston, Texas 77006
Tel: 713-636-2936
Fax: 713-636-2987
email: hforouzan@gaiconsulting.com

SURVEYED BY:
PAPE–DAWSON ENGINEERS
FB NO. 24–018

THIS DOCUMENT IS RELEASED FOR INTERIM REVIEW UNDER THE AUTHORIZATION OF HOSS FOROUZAN, P.E. (#77748) AND IS **NOT TO BE USED FOR CONSTRUCTION.**

CITY OF HOUSTON
HOUSTON PUBLIC WORKS

LIFT STATION REHABILITATION AND RECONSTRUCTION
BEN'S BRANCH, WOODLAND RIDGE, ELMWOOD HILLS, FOREST SHORES, TRAIL RIVER, RIVERLAWN

ELECTRICAL

TRAIL RIVER LIFT STATION ELECTRICAL THREE LINE DIAGRAM

WBS NUMBER	FOR CITY OF HOUSTON USE ONLY
R–000267–0180–3	
DRAWING SCALE	
AS NOTED	
CITY OF HOUSTON PM	
BRENDA JOHNSON P.E.	
SHEET NO. XX OF XX	

TR–E–04

FILE PATH: O:\H8107_Lift Station Rehabilitation And Reconstruction (Pape Dawson)\6 Drawings\Electrical\Working\Trail River\H8107_TR–E–04.dwg

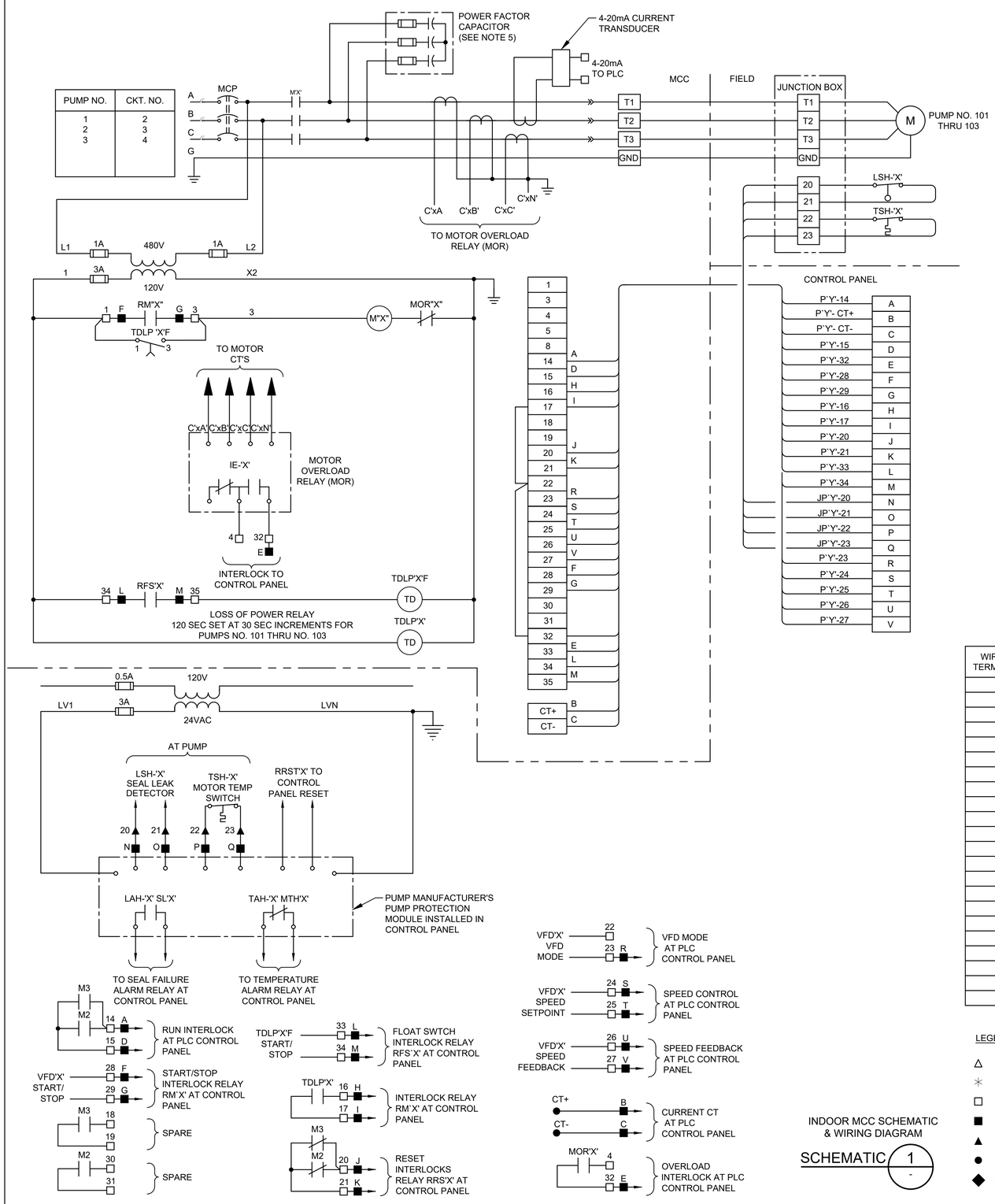

NOTES:

1. THE 'X' NOTATION IN SCHEMATIC DESIGNATIONS REPRESENTS APPLICABLE PUMP NO. 101, 102, 103.
2. THE 'Y" NOTATION INDICATES MCC CIRCUIT NUMBER.
3. UNLESS OTHERWISE INDICATED, ALL DEVICES WITHOUT FURTHER DESIGNATION ARE LOCATED AT THE MOTOR CONTROL CENTER (MCC).
4. MOTOR OVERLOAD RELAY OUTPUT CONTACT SHOWN IS NORMALLY CLOSED WHEN RELAY IS DE-ENERGIZED. OPEN WHEN ENERGIZED, AND CLOSED WHEN IN ALARM. (VERIFY OPERATION OF RELAY PROVIDED AND ADJUST CONNECTION OF RMOR AUXILIARY RELAYS.)

WIRE TAG OR TERMINAL LABEL	PUMP NO. 101	PUMP NO. 102	PUMP NO. 103	FUNCTION
A	3P1	3P2	3P3	24VDC CONTROL
B	124	224	324	4-20mA CURRENT TRANSDUCER
C	125	225	325	4-20mA CURRENT TRANSDUCER
D	116	216	316	M CONTACT
E	117	217	317	OVERLOAD ALARM
F	114	214	314	RUN INTERLOCK
G	115	215	315	RUN INTERLOCK
H	102	202	302	LOSS OF POWER TIMER
I	103	203	303	LOSS OF POWER TIMER
J	118	218	318	ALARM RESET INTERLOCK
K	119	219	319	ALARM RESET INTERLOCK
L	126	226	326	FLOAT SWITCH RUN INTERLOCK
M	127	227	327	FLOAT SWITCH RUN INTERLOCK
N	120	220	320	SEAL LEAK DETECTOR
O	121	221	321	SEAL LEAK DETECTOR
P	122	222	322	MOTOR TEMPERATURE SWITCH
Q	123	223	323	MOTOR TEMPERATURE SWITCH
R	109	209	309	VFD MODE
S	110	210	310	4-20mA VFD SPEED CONTROL
T	111	211	311	4-20mA VFD SPEED CONTROL
U	112	212	312	4-20mA VFD SPEED INDICATION
V	113	213	313	4-20mA VFD SPEED INDICATION

LEGEND

- △ DEVICE OR FIELD TERMINAL LOCATED AT MOTOR
- ✳ DEVICE OR FIELD TERMINAL LOCATED REMOTE
- □ DEVICE OR FIELD TERMINAL LOCATED AT POWER PANEL
- ■ FIELD TERMINAL LOCATED AT CONTROL PANEL
- ▲ REMOTE TERMINAL
- ● DEVICE TERMINAL NO.
- ◆ PC INTERFACE TERMINAL

INDOOR MCC SCHEMATIC & WIRING DIAGRAM

SCHEMATIC 1 / -

NO.	DATE	REVISION	APP.

NOTICE:
FOR YOUR SAFETY, YOU ARE REQUIRED BY TEXAS LAW TO CALL 811 AT LEAST 48 HOURS BEFORE YOU DIG SO THAT UNDERGROUND LINES CAN BE MARKED. THIS SIGNATURE DOES NOT FULFILL YOUR OBLIGATION TO CALL 811

VERIFICATION OF PRIVATE UTILITY LINES

Date

CenterPoint Energy natural gas utilities shown. (Gas service lines are not shown). This signature not be used for conflict verification.

Signature valid for six months.

Date

CenterPoint Energy/UNDERGROUND Electrical Facilities Verification ONLY. (This signature verifies existing underground facilities – not to be used for conflict verification)

Signature valid for six months.

Date

Approved for AT&T underground conduit facilities only.
Signature valid for one year.

PAPE–DAWSON
2107 CITYWEST BLVD, 3RD FLR I HOUSTON, TX 77042 I 713.428.2400
TEXAS ENGINEERING FIRM #470 I TEXAS SURVEYING FIRM #10028800

GAI
Gupta & Associates, Inc.
CONSULTING ENGINEERING
Registration No. F-2593
302 Dennis St.
Houston, Texas 77006
Tel: 713-636-2936
Fax: 713-636-2987
email: hforouzan@gaiconsulting.com

SURVEYED BY:
PAPE–DAWSON ENGINEERS
FB NO. 24–018

THIS DOCUMENT IS RELEASED FOR INTERIM REVIEW UNDER THE AUTHORIZATION OF HOSS FOROUZAN, P.E. (#77748) AND IS **NOT TO BE USED FOR CONSTRUCTION.**

CITY OF HOUSTON
HOUSTON PUBLIC WORKS

LIFT STATION REHABILITATION AND RECONSTRUCTION
BEN'S BRANCH, WOODLAND RIDGE, ELMWOOD HILLS, FOREST SHORES, TRAIL RIVER, RIVERLAWN

ELECTRICAL

TRAIL RIVER LIFT STATION MCC SCHEMATIC AND WIRING DIAGRAM

WBS NUMBER	FOR CITY OF HOUSTON USE ONLY
R–000267–0180–3	
DRAWING SCALE	
AS NOTED	
CITY OF HOUSTON PM	
BRENDA JOHNSON P.E.	
SHEET NO. XX OF XX	

TR–E–05

FILE PATH: O:\H8107_Lift Station Rehabilitation And Reconstruction (Pape Dawson)\6 Drawings\Electrical\Working\Trail River\H8107_TR–E–05.dwg

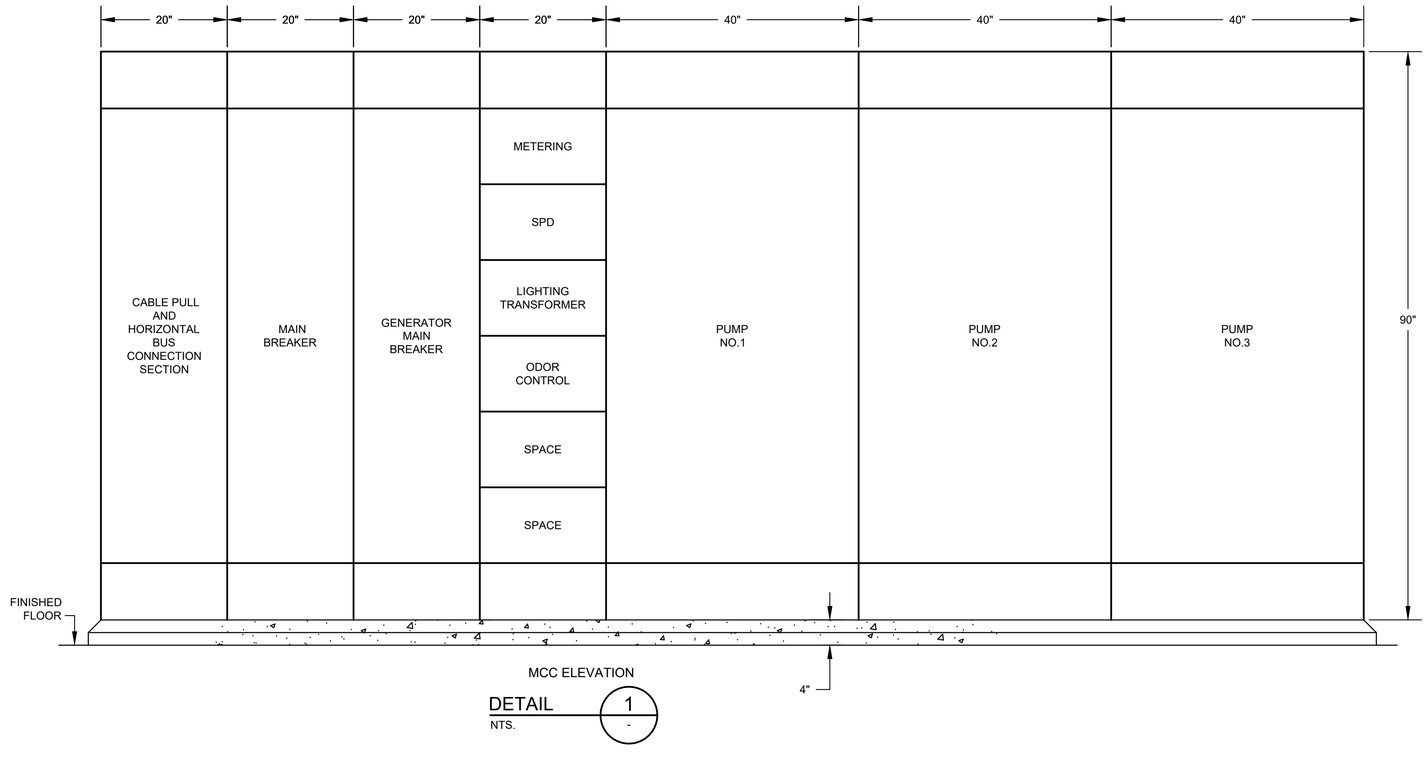

MCC ELEVATION

DETAIL 1

NTS. -

NO.	DATE	REVISION	APP.

NOTICE:
FOR YOUR SAFETY, YOU ARE REQUIRED BY TEXAS LAW TO CALL 811 AT LEAST 48 HOURS BEFORE YOU DIG SO THAT UNDERGROUND LINES CAN BE MARKED. THIS SIGNATURE DOES NOT FULFILL YOUR OBLIGATION TO CALL 811

VERIFICATION OF PRIVATE UTILITY LINES

Date

CenterPoint Energy natural gas utilities shown. (Gas service lines are not shown). This signature not be used for conflict verification.

Signature valid for six months.

Date

CenterPoint Energy/UNDERGROUND Electrical Facilities Verification ONLY. (This signature verifies existing underground facilities – not to be used for conflict verification)

Signature valid for six months.

Date

Approved for AT&T underground conduit facilities only.
Signature valid for one year.

PAPE–DAWSON
2107 CITYWEST BLVD, 3RD FLR I HOUSTON, TX 77042 I 713.428.2400
TEXAS ENGINEERING FIRM #470 I TEXAS SURVEYING FIRM #10028800

GAI
Gupta & Associates, Inc.
CONSULTING ENGINEERING
Registration No. F-2593
302 Dennis St.
Houston, Texas 77006
Tel: 713-636-2936
Fax: 713-636-2987
email: hforouzan@guiconsulting.com

SURVEYED BY:
PAPE–DAWSON ENGINEERS
FB NO. 24–018

THIS DOCUMENT IS RELEASED FOR INTERIM REVIEW UNDER THE AUTHORIZATION OF HOSS FOROUZAN, P.E. (#77748) AND IS **NOT TO BE USED FOR CONSTRUCTION.**

CITY OF HOUSTON
HOUSTON PUBLIC WORKS

LIFT STATION REHABILITATION AND RECONSTRUCTION
BEN'S BRANCH, WOODLAND RIDGE, ELMWOOD HILLS, FOREST SHORES, TRAIL RIVER, RIVERLAWN

ELECTRICAL

TRAIL RIVER LIFT STATION MCC ELEVATION

WBS NUMBER	FOR CITY OF HOUSTON USE ONLY
R–000267–0180–3	
DRAWING SCALE	
AS NOTED	
CITY OF HOUSTON PM	
BRENDA JOHNSON P.E.	
SHEET NO. XX OF XX	

TR–E–06

FILE PATH: O:\H8107_Lift Station Rehabilitation And Reconstruction (Pape Dawson)\6 Drawings\Electrical\Working\Trail River\H8107_TR–E–06.dwg

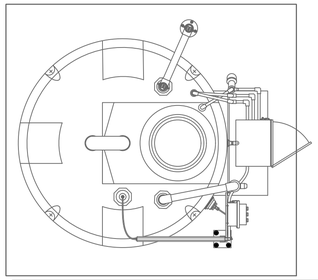

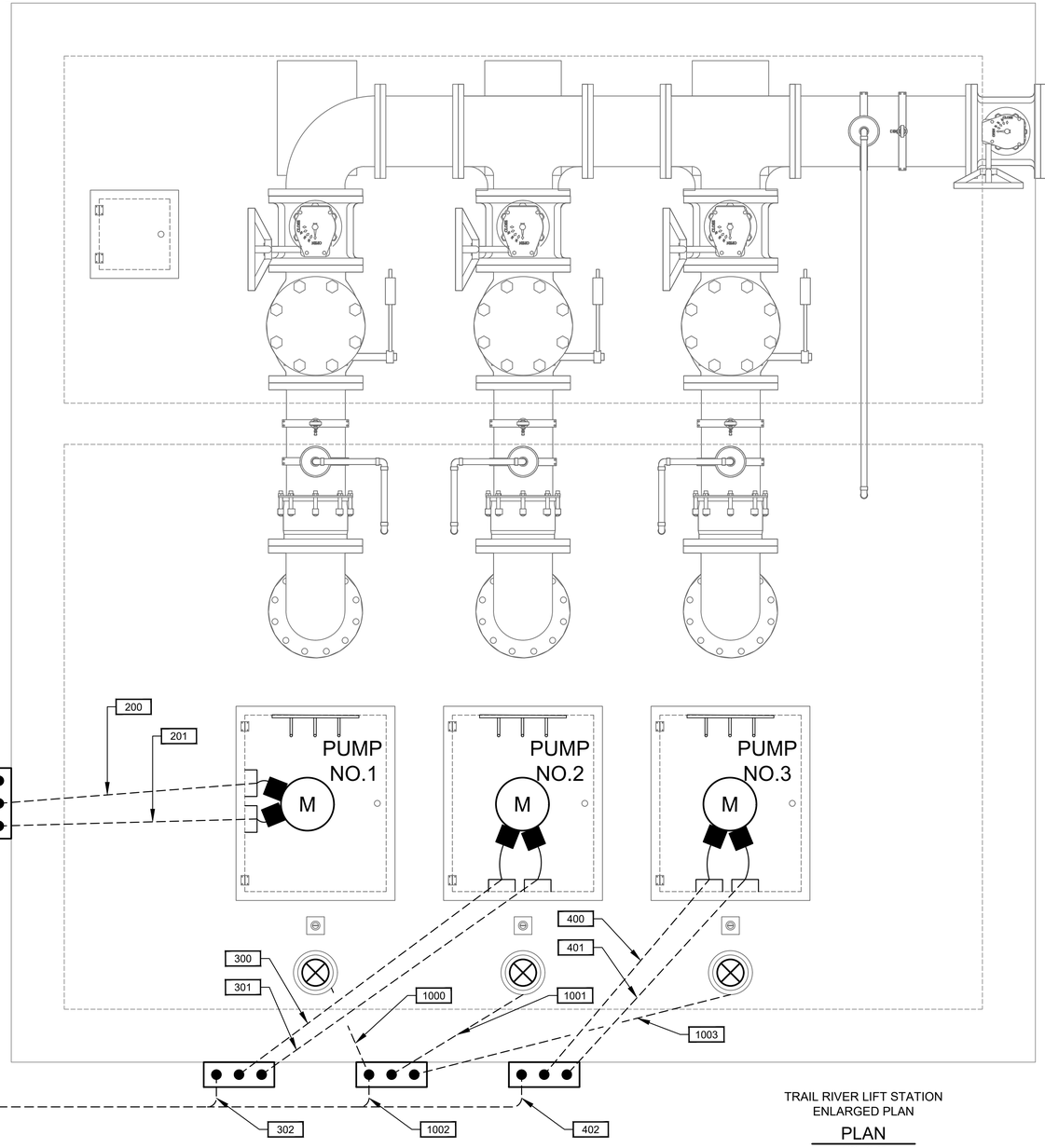

TRAIL RIVER LIFT STATION
ENLARGED PLAN

PLAN

1/2"=1'-0"

NO.	DATE	REVISION	APP.

1 0 1 2 3

SCALE: 1/2" = 1'-0"

NOTICE:
FOR YOUR SAFETY, YOU ARE REQUIRED BY TEXAS LAW TO CALL 811 AT LEAST 48 HOURS BEFORE YOU DIG SO THAT UNDERGROUND LINES CAN BE MARKED. THIS SIGNATURE DOES NOT FULFILL YOUR OBLIGATION TO CALL 811

VERIFICATION OF PRIVATE UTILITY LINES

Date

CenterPoint Energy natural gas utilities shown. (Gas service lines are not shown). This signature not be used for conflict verification.

Signature valid for six months.

Date

CenterPoint Energy/UNDERGROUND Electrical Facilities Verification ONLY. (This signature verifies existing underground facilities – not to be used for conflict verification)

Signature valid for six months.

Date

Approved for AT&T underground conduit facilities only.
Signature valid for one year.

PAPE-DAWSON
2107 CITYWEST BLVD, 3RD FLR I HOUSTON, TX 77042 I 713.428.2400
TEXAS ENGINEERING FIRM #470 I TEXAS SURVEYING FIRM #10028800

GAI
Gupta & Associates, Inc.
CONSULTING ENGINEERING
Registration No. F-2593
302 Dennis St.
Houston, Texas 77006
Tel: 713-636-2936
Fax: 713-636-2987
email: hfarouzan@gaiconsulting.com

THIS DOCUMENT IS RELEASED FOR INTERIM REVIEW UNDER THE AUTHORIZATION OF HOSS FOROUZAN, P.E. (#77748) AND IS **NOT TO BE USED FOR CONSTRUCTION.**

SURVEYED BY:
PAPE-DAWSON ENGINEERS
FB NO. 24-018

CITY OF HOUSTON
HOUSTON PUBLIC WORKS

LIFT STATION REHABILITATION AND RECONSTRUCTION
BEN'S BRANCH, WOODLAND RIDGE, ELMWOOD HILLS, FOREST SHORES, TRAIL RIVER, RIVERLAWN

ELECTRICAL

TRAIL RIVER LIFT STATION ELECTRICAL ENLARGED LIFT STATION PLAN

WBS NUMBER	FOR CITY OF HOUSTON USE ONLY
R-000267-0180-3	
DRAWING SCALE	
AS NOTED	
CITY OF HOUSTON PM	
BRENDA JOHNSON P.E.	
SHEET NO. XX OF XX	

TR-E-07

FILE PATH: O:\H8107_Lift Station Rehabilitation And Reconstruction (Pape Dawson)\6 Drawings\Electrical\Working\Trail River\H8107_TR-E-07.dwg

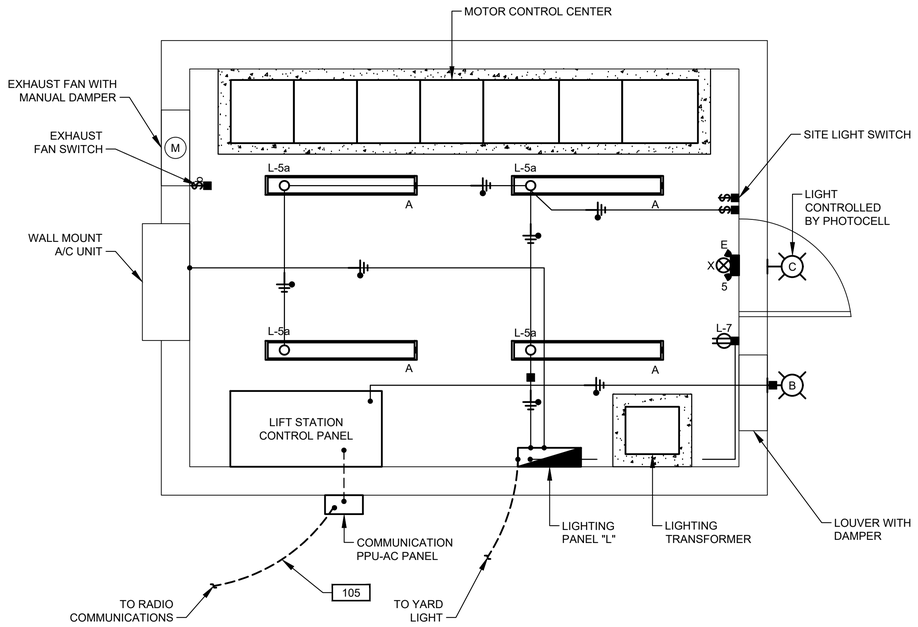

LIGHTING & COMMUNICATION SYSTEM PLAN

1/2"=1'-0"

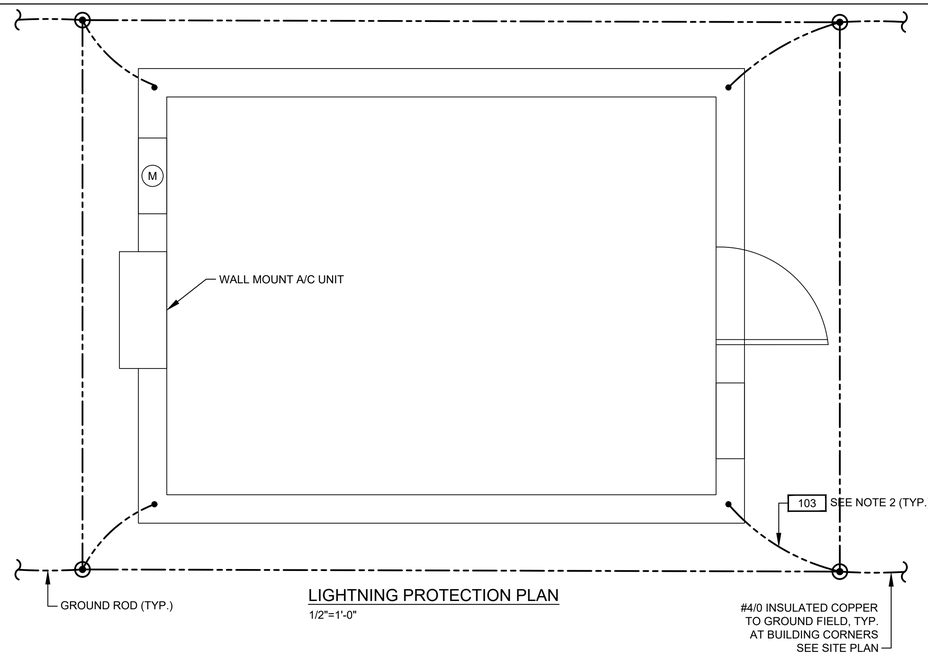

LIGHTNING PROTECTION PLAN

1/2"=1'-0"

NOTES:

1. THERMO WELD BUILDING GROUND CONDUCTOR TO BUILDING REINFORCING STEEL.
2. BOND REBAR IN CONCRETE FOOTER TO GROUND ROD.

NO.	DATE	REVISION	APP.

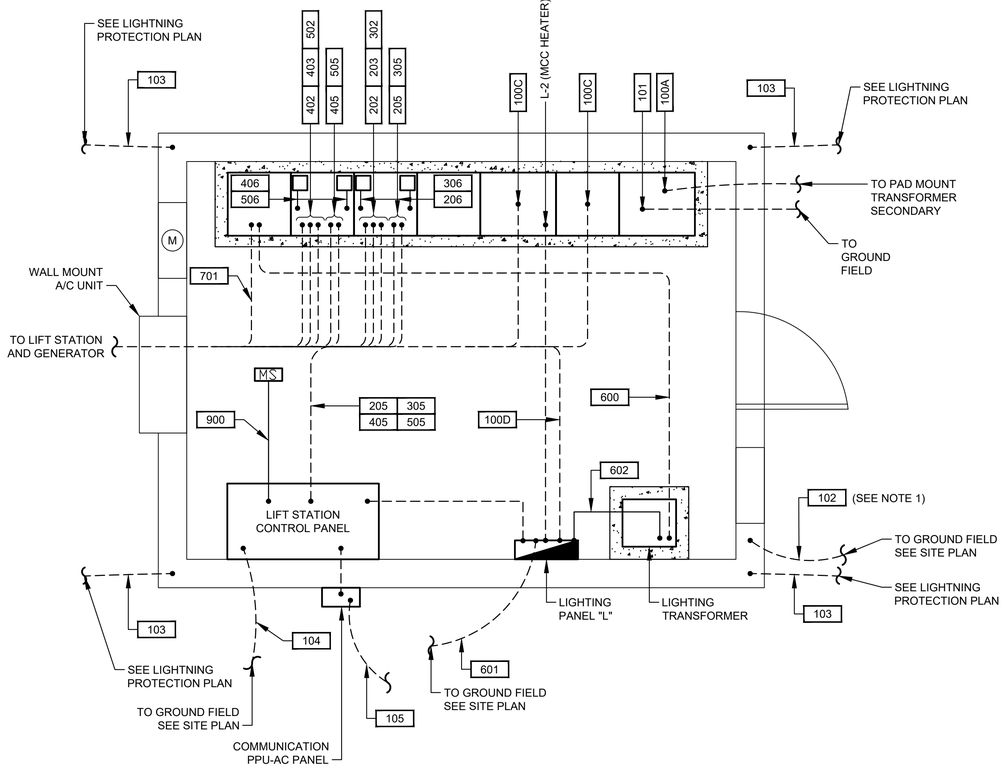

POWER PLAN

1/2"=1'-0"

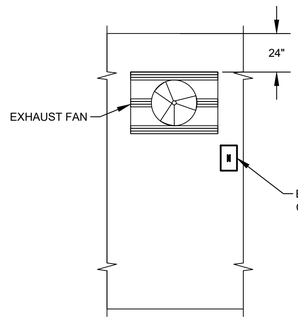

EXHAUST FAN

NTS.

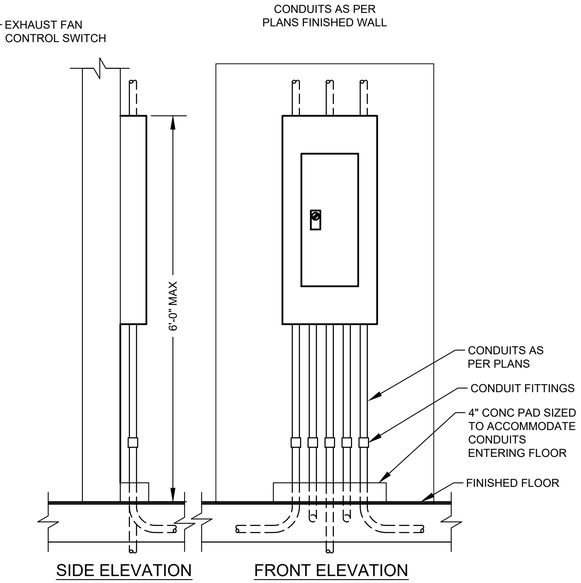

TYPICAL PANEL INSTALLATION

DETAIL - NTS.

NOTICE:
FOR YOUR SAFETY, YOU ARE REQUIRED BY TEXAS LAW TO CALL 811 AT LEAST 48 HOURS BEFORE YOU DIG SO THAT UNDERGROUND LINES CAN BE MARKED. THIS SIGNATURE DOES NOT FULFILL YOUR OBLIGATION TO CALL 811

VERIFICATION OF PRIVATE UTILITY LINES

Date

CenterPoint Energy natural gas utilities shown. (Gas service lines are not shown). This signature not be used for conflict verification.

Signature valid for six months.

Date

CenterPoint Energy/UNDERGROUND Electrical Facilities Verification ONLY. (This signature verifies existing underground facilities – not to be used for conflict verification)

Signature valid for six months.

Date

Approved for AT&T underground conduit facilities only.
Signature valid for one year.

PAPE–DAWSON
2107 CITYWEST BLVD, 3RD FLR I HOUSTON, TX 77042 I 713.428.2400
TEXAS ENGINEERING FIRM #470 I TEXAS SURVEYING FIRM #10028800

GAI
Gupta & Associates, Inc.
CONSULTING ENGINEERING
Registration No. F-2593
302 Dennis St.
Houston, Texas 77006
Tel: 713-636-2936
Fax: 713-636-2987
email: hforouzan@gaiconsulting.com

SURVEYED BY:
PAPE–DAWSON ENGINEERS
FB NO. 24–018

THIS DOCUMENT IS RELEASED FOR INTERIM REVIEW UNDER THE AUTHORIZATION OF HOSS FOROUZAN, P.E. (#77748) AND IS **NOT TO BE USED FOR CONSTRUCTION.**

CITY OF HOUSTON

HOUSTON PUBLIC WORKS

LIFT STATION REHABILITATION AND RECONSTRUCTION
BEN'S BRANCH, WOODLAND RIDGE, ELMWOOD HILLS, FOREST SHORES, TRAIL RIVER, RIVERLAWN

ELECTRICAL

TRAIL RIVER LIFT STATION CONTROL BUILDING PLAN

WBS NUMBER	FOR CITY OF HOUSTON USE ONLY
R–000267–0180–3	
DRAWING SCALE	
AS NOTED	
CITY OF HOUSTON PM	
BRENDA JOHNSON P.E.	
SHEET NO. XX OF XX	

TR–E–08

FILE PATH: O:\H8107_Lift Station Rehabilitation And Reconstruction (Pape Dawson)\6 Drawings\Electrical\Working\Trail River\H8107_TR–E–08.dwg

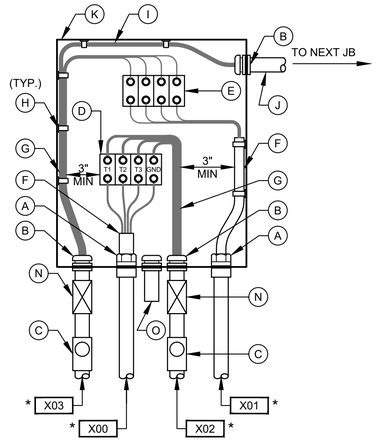

PUMP NO.1 & NO.3 & NO.5
JUNCTION BOX

DETAIL 3
NTS
(SEE NOTE 7)

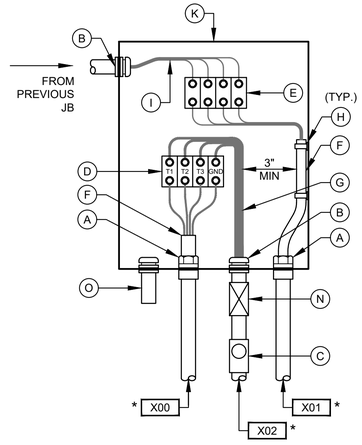

PUMP NO.2 & NO.4 & NO.6
JUNCTION BOX

DETAIL 4
NTS
(SEE NOTE 7)

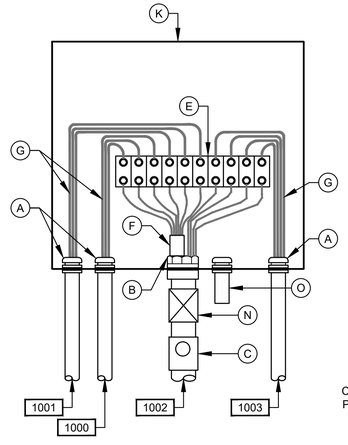

LEVEL TRANSMITTER
JUNCTION BOX

DETAIL 6
NTS
(SEE NOTE 7)

✱ REPLACE `X' PER NOTATION SCHEDULE

NOTATION SCHEDULE

`X'	PUMP NO.
2	1
3	2
4	3
5	4
6	5
7	6

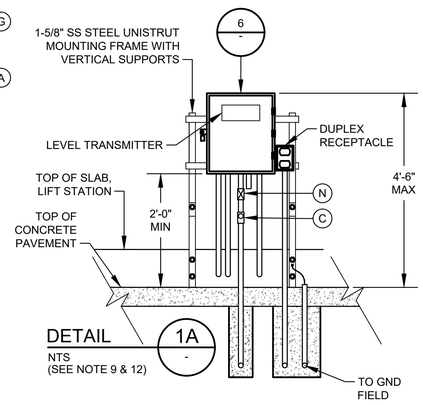

DETAIL 1A
NTS
(SEE NOTE 9 & 12)

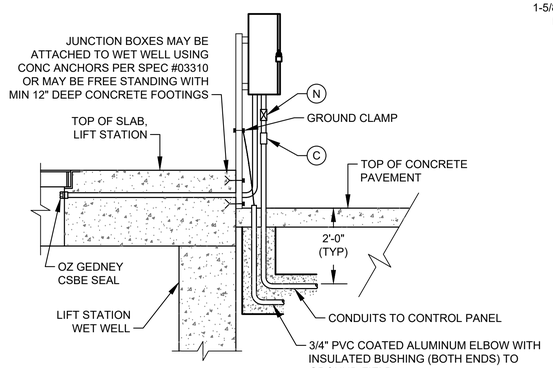

TYP SIDE VIEW FOR DETAIL 1, 1A, 2, & 7

(SEE NOTE 10)

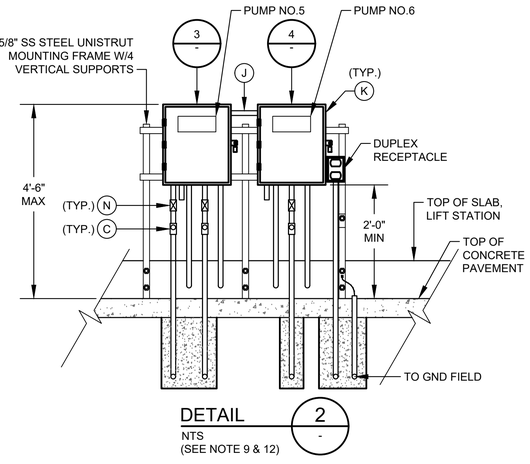

DETAIL 2
NTS
(SEE NOTE 9 & 12)

JUNCTION BOX EQUIPMENT SCHEDULE

- A - OZ GEDNEY CSBE SEAL
- B - WATERTIGHT CONDUIT HUB WITH INSULATED BUSHING
- C - CLASS I, DIV 1, EXPLOSION PROOF SEAL INSTALLED PER NEC DIV 501
- D - POWER TERMINAL BLOCK W/SCREW DOWN BOX LUGS
- E - CONTROL TERM BLOCK W/SCREW DOWN BOX LUGS
- F - MULTI-CONDUCTOR CABLE, REMOVE OUTER JACKET AS SHOWN
- G - WIRING AS SCHEDULED
- H - WIRING HARNESS PERMANENTLY AFFIXED
- I - PUMP CONTROL WIRING FROM PUMPS 2; 2 & 3; 4; OR D2, AS APPLICABLE
- J - 1 1/2" PVC COATED CONDUIT NIPPLE
- K - NEMA 4X STAINLESS STEEL JUNCTION BOX WITH GASKETED FRONT COVER, SINGLE QUARTER TURN, OIL-TIGHT LATCH AND PADLOCKING PROVISIONS, HOFFMAN D-3L16H1206 SS LF OR EQUAL. MINIMUM SIZE: 12"W X 16"H X 6"D
- L - NAMEPLATE, SEE SPECIFICATIONES (SEE NAMEPLATE SCHEDULE)
- M - MOTOR RATED SWITCH
- N - EXPANSION FITTING
- O - DRAIN VENT

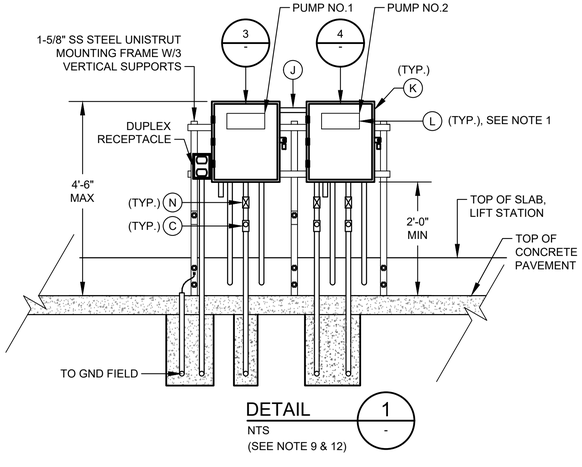

DETAIL 1
NTS
(SEE NOTE 9 & 12)

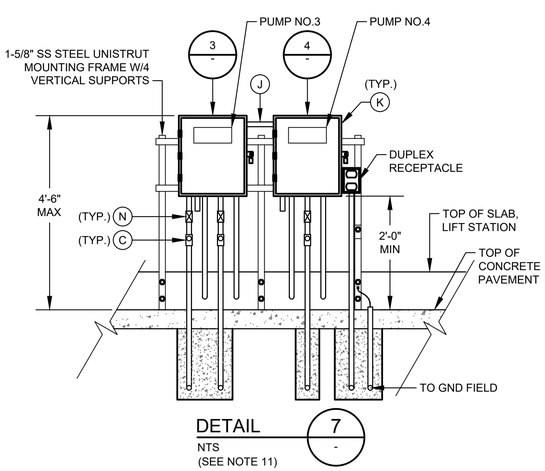

DETAIL 7
NTS
(SEE NOTE 11)

NOTES:

1. NAMEPLATES SHALL BE MOUNTED TO JUNCTION BOXES USING 316 STAINLESS STEEL HARDWARE.
2. MAINTAIN MINIMUM SEPARATION REQUIRED UNDER NEC ARTICLE 504, BETWEEN INTRINSICALLY SAFE CONTROL WIRING AND NON INTRINSICALLY SAFE MOTOR FEEDER WIRING.
3. UNLESS OTHERWISE NOTED, ALL EXTERIOR EXPOSED CONDUITS SHALL BE PVC COATED ALUMINUM.
4. UNLESS OTHERWISE NOTED, ALL NUTS, BOLTS, SCREWS WASHERS, ETC SHALL BE TYPE 316 STAINLESS STEEL.
5. ALL UNDERGROUND CONDUITS TO BE ENCASED IN REINFORCED CONCRETE DUCTBANK.
6. PROVIDE ANTI-CORROSIVE SPRAY ON ANY BARE METAL PARTS OR EXPOSED WIRE.
7. SEE WIRING SCHEMATICS FOR TERMINALS AND WIRE NUMBERS.
8. ANY CONDUIT REQUIRING A CSBE SEAL, SHALL BE A MINIMUM SIZE OF 2 1/2" PER CABLE.
9. DETAIL SHOWN MAY BE MODIFIED PER SITE SITUATION.
10. COORDINATE WITH WASTE WATER OPERATIONS ELECTRICAL ORGANIZATION FOR THE OPENING OF JUNCTION BOXES TO THE SIDE OF WET WELL IF REQUIRED DURING CONSTRUCTION.
11. THE ENCLOSURES WITH ELECTRICAL CIRCUITS SHALL BE A MINIMUM OF 5 FEET FROM ANY CLASSIFIED AREA, OTHERWISE EXPLOSION PROOF TYPE ENCLOSURES SHALL BE USED.
12. THE RECEPTACLES SHALL BE EXPLOSION PROOF TYPE IF INSTALLED WITHIN 5 FEET OF CLASSIFIED AREA, SHALL BE FIELD VERIFIED.

NO.	DATE	REVISION	APP.

NOTICE:
FOR YOUR SAFETY, YOU ARE REQUIRED BY TEXAS LAW TO CALL 811 AT LEAST 48 HOURS BEFORE YOU DIG SO THAT UNDERGROUND LINES CAN BE MARKED. THIS SIGNATURE DOES NOT FULFILL YOUR OBLIGATION TO CALL 811

VERIFICATION OF PRIVATE UTILITY LINES

Date

CenterPoint Energy natural gas utilities shown. (Gas service lines are not shown). This signature not be used for conflict verification.

Signature valid for six months.

Date

CenterPoint Energy/UNDERGROUND Electrical Facilities Verification ONLY. (This signature verifies existing underground facilities – not to be used for conflict verification)

Signature valid for six months.

Date

Approved for AT&T underground conduit facilities only.
Signature valid for one year.

PAPE–DAWSON
2107 CITYWEST BLVD, 3RD FLR I HOUSTON, TX 77042 I 713.428.2400
TEXAS ENGINEERING FIRM #470 I TEXAS SURVEYING FIRM #10028800

GAI
Gupta & Associates, Inc.
CONSULTING ENGINEERING
Registration No. F-2593
302 Dennis St.
Houston, Texas 77006
Tel: 713-636-2936
Fax: 713-636-2987
email: hforouzan@gaiconsulting.com

SURVEYED BY:
PAPE–DAWSON ENGINEERS
FB NO. 24–018

THIS DOCUMENT IS RELEASED FOR INTERIM REVIEW UNDER THE AUTHORIZATION OF HOSS FOROUZAN, P.E. (#77748) AND IS **NOT TO BE USED FOR CONSTRUCTION.**

CITY OF HOUSTON
HOUSTON PUBLIC WORKS

LIFT STATION REHABILITATION AND RECONSTRUCTION
BEN'S BRANCH, WOODLAND RIDGE, ELMWOOD HILLS, FOREST SHORES, TRAIL RIVER, RIVERLAWN

ELECTRICAL

TRAIL RIVER LIFT STATION TYPICAL JUNCTION BOX DETAILS

WBS NUMBER	FOR CITY OF HOUSTON USE ONLY
R–000267–0180–3	
DRAWING SCALE	
AS NOTED	
CITY OF HOUSTON PM	
BRENDA JOHNSON P.E.	
SHEET NO. XX OF XX	

TR–E–09

FILE PATH: O:\H8107_Lift Station Rehabilitation And Reconstruction (Pape Dawson)\6 Drawings\Electrical\Working\Trail River\H8107_TR–E–09.dwg

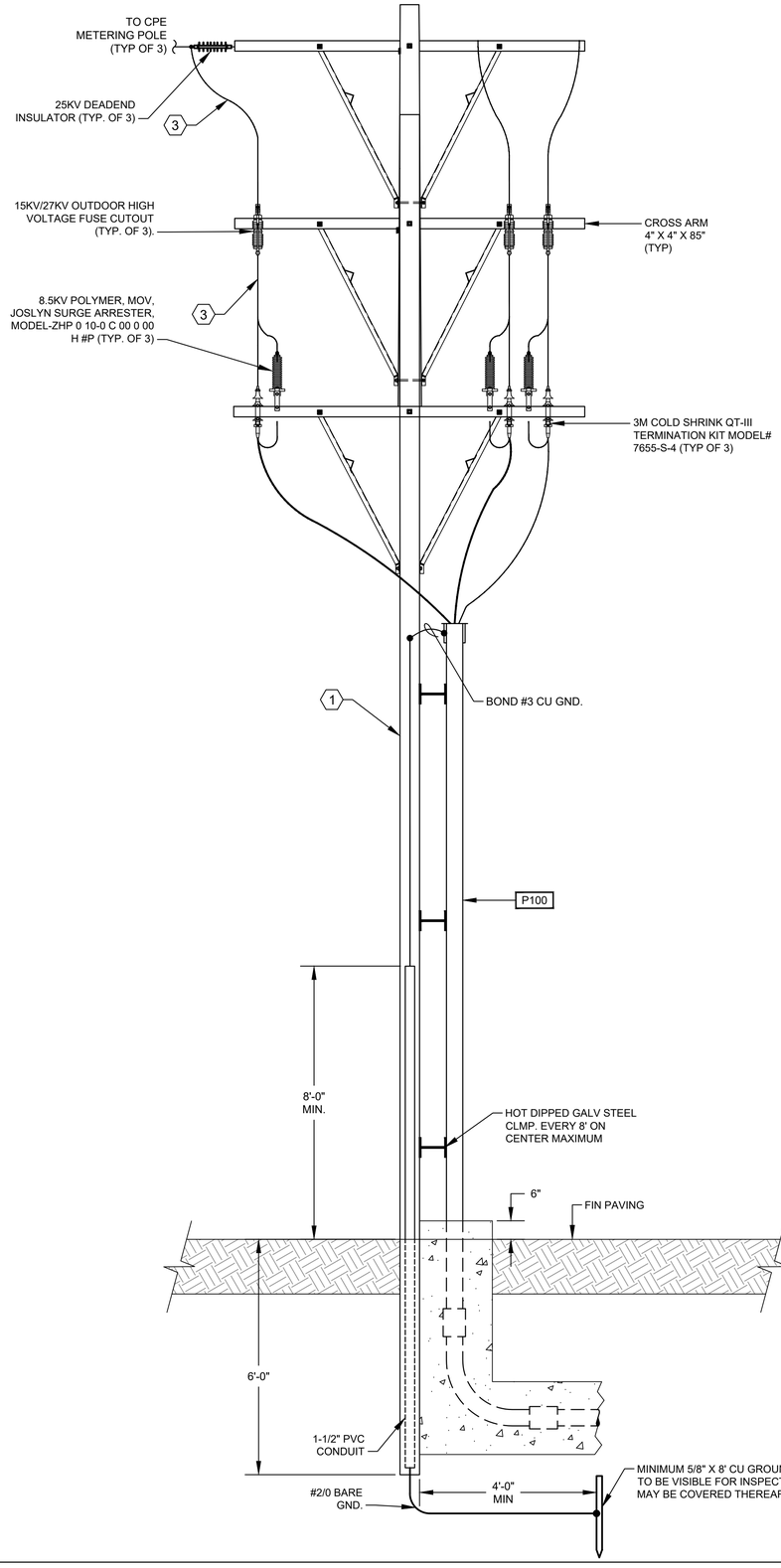

ELECTRICAL SERVICE POLE

DETAIL 1 / -

NTS.

NOTES BY SYMBOL "⟨#⟩":

1. NEW CLASS 2 WOOD SERVICE POLE, 45'-0" LONG.
2. THE BURIAL DEPTH SHALL BE 6'-0" MINIMUM.
3. #2 AWG., CU., 15KV SHIELDED 133% INSULATION, WET LOCATION SUNLIGHT RESISTANT TYPE MV CABLE.
4. THE CONDUCTORS TO BE PROVIDED AND INSTALLED BY CPE.

GENERAL NOTES:

1. ALL CROSS ARMS WITH BRACINGS SHALL BE PROPERLY INSTALLED.
2. ALL AHRDWARE SHALL BE HOT DIPPED GALV. STEEL..
3. THE HOLE IN THE GROUND AROUND THE CONCRETE POLE SHALL BE BACKFILLED WITH CRUSHED LIME STONE AND SHALL BE PROPERLY STAMPED.

NO.	DATE	REVISION	APP.

NOTICE:
FOR YOUR SAFETY, YOU ARE REQUIRED BY TEXAS LAW TO CALL 811 AT LEAST 48 HOURS BEFORE YOU DIG SO THAT UNDERGROUND LINES CAN BE MARKED. THIS SIGNATURE DOES NOT FULFILL YOUR OBLIGATION TO CALL 811

VERIFICATION OF PRIVATE UTILITY LINES

Date

CenterPoint Energy natural gas utilities shown. (Gas service lines are not shown). This signature not be used for conflict verification.

Signature valid for six months.

Date

CenterPoint Energy/UNDERGROUND Electrical Facilities Verification ONLY. (This signature verifies existing underground facilities – not to be used for conflict verification)

Signature valid for six months.

Date

Approved for AT&T underground conduit facilities only.
Signature valid for one year.

PAPE–DAWSON
2107 CITYWEST BLVD, 3RD FLR I HOUSTON, TX 77042 I 713.428.2400
TEXAS ENGINEERING FIRM #470 I TEXAS SURVEYING FIRM #10028800

GAI
Gupta & Associates, Inc.
CONSULTING ENGINEERING
Registration No. F-2593
302 Dennis St.
Houston, Texas 77006
Tel: 713-636-2936
Fax: 713-636-2987
email: hforouzan@gaiconsulting.com

SURVEYED BY:
PAPE–DAWSON ENGINEERS
FB NO. 24–018

THIS DOCUMENT IS RELEASED FOR INTERIM REVIEW UNDER THE AUTHORIZATION OF HOSS FOROUZAN, P.E. (#77748) AND IS **NOT TO BE USED FOR CONSTRUCTION.**

CITY OF HOUSTON
HOUSTON PUBLIC WORKS

LIFT STATION REHABILITATION AND RECONSTRUCTION
BEN'S BRANCH, WOODLAND RIDGE, ELMWOOD HILLS, FOREST SHORES, TRAIL RIVER, RIVERLAWN

ELECTRICAL

TRAIL RIVER LIFT STATION SERVICE POLE DETAIL

WBS NUMBER	FOR CITY OF HOUSTON USE ONLY
R–000267–0180–3	
DRAWING SCALE	
AS NOTED	
CITY OF HOUSTON PM	
BRENDA JOHNSON P.E.	
SHEET NO. XX OF XX	

TR–E–10

FILE PATH: O:\H8107_Lift Station Rehabilitation And Reconstruction (Pape Dawson)\6 Drawings\Electrical\Working\Trail River\H8107_TR-E-10.dwg

	DESCRIPTION	SERVICE		ROUTING			CONDUIT & WIRE SIZE
		VOLTAGE	AMPS OR HP	FROM	TO	VIA	
A	MAIN BONDING JUMPER	--	--	MAIN FUSED DISCONNECT NEUTRAL	MAIN FUSED DISCONNECT GROUND	--	#4/0 GND.
B	EQUIPMENT BONDING JUMPER	--	--	MCC/POWER PANEL ENCLOSURE	POWER/CONTROL PANEL & EQUIPMENT GROUNDING	--	#4/0 GND.
C	GROUNDED ELECTRODE CONDUCTOR	--	--	GROUNDING ELECTRODE	MAIN SERVICE FUSED DISCONNECT	--	#4/0 GND.
100	SERVICE ENTRANCE	480V	1200A	UTILITY POWER SERVICE	UTILITY MAIN BREAKER IN MCC	--	3 SETS OF 3 #600MCM, #2 NEUT., #2 GND., 4"C. EA.
100A	GENERATOR POWER ENTRANCE	480V	1200A	STANDBY GENERATOR	GENERATOR MAIN BREAKER IN MCC	--	3 SETS OF 3 #600MCM, #2 NEUT., #2 GND., 4"C. EA.
100B	GENERATOR CONTROL POWER	120/240V	50A	STANDBY GENERATOR	LIGHTING PANEL	--	3#4 AWG., #8 GND., 1-1/2" C.
100C	GENERATOR CONTROLS	24VDC	--	STANDBY GENERATOR	ATC IN MCC	--	6#14 AWG., #14 GND., 3/4" C.
100D	NORMAL/EMERGENCY POWER STATUS	24VDC	--	ATC IN MCC	CONTROL PANEL	--	4#14 AWG., #14 GND., 3/4" C.
100E	GENERATOR ANNUNCIATOR	24VDC	--	STANDBY GENERATOR	CONTROL PANEL	--	16#14 AWG., #14 GND., 3/4" C.
101	GROUND ELECTRODE CONDUCTOR	--	--	POWER PANEL	GROUND FIELD	--	2/0 GND.
102	GROUND ELECTRODE CONDUCTOR	--	--	BUILDING STEEL	GROUND FIELD	--	2/0 GND.
103	BUILDING GROUNDING	--	--	BUILDING REBAR	LIGHTNING GROUND ROD	--	2/0 GND.
104	GROUND ELECTRODE CONDUCTOR	--	--	CONTROL PANEL OR MOTOR CONTROL CENTER	GROUND FIELD	--	2/0 GND.
105	COMMUNICATION	--	--	COMMUNICATION POLE	CONTROL PANEL	--	1-1/2"C. CAT-5E
105A	COMMUNICATION POLE LIGHT	120V	--	COMMUNICATION POLE	LIGHTING PANEL CKT #6 & CKT #4	--	L6 (IND.), 2#12 #12G, 1"C, L4 (OUTD.)
200	PUMP NO. 101 POWER	480V	280 HP	PUMP NO. 101	PUMP NO. 101 JUNCTION BOX	--	MANUFACTURER CABLE IN 2-1/2"C.
201	PUMP NO. 101 CONTROLS	120V	--	PUMP NO. 101	PUMP NO. 101 JUNCTION BOX	--	MANUFACTURER CABLE IN 2-1/2"C.
202	PUMP NO. 101 POWER	480V	280 HP	PUMP NO. 101 JUNCTION BOX	PUMP STARTER	--	3#1, #6 GND., 2" C.
203	COMBINED PUMP CONTROLS	120V	--	PUMP NO. 101 JUNCTION BOX	PUMP STARTER	--	COMBINE 200 & 300 WIRING, 10#14 1"C.
205	PUMP NO. 101 CONTROLS	120V	--	STARTER IN MOTOR CONTROL CENTER	CONTROL PANEL	--	12#14 1"C.
300	PUMP NO. 102 POWER	480V	280 HP	PUMP NO. 102	PUMP NO. 102 JUNCTION BOX	--	MANUFACTURER CABLE IN 2-1/2"C.
301	PUMP NO. 102 CONTROLS	120V	--	PUMP NO. 102	PUMP NO. 102 JUNCTION BOX	--	MANUFACTURER CABLE IN 2-1/2"C.
302	PUMP NO. 102 POWER	480V	280 HP	PUMP NO. 102 JUNCTION BOX	PUMP STARTER	--	3#1, #6 GND., 2" C.
305	PUMP NO. 102 CONTROLS	120V	--	STARTER IN MOTOR CONTROL CENTER	CONTROL PANEL	--	12#14 1"C.
400	PUMP NO. 103 POWER	480V	280 HP	PUMP NO. 103	PUMP NO. 103 JUNCTION BOX	--	MANUFACTURER CABLE IN 2-1/2"C.
401	PUMP NO. 103 CONTROLS	120V	--	PUMP NO. 103	PUMP NO. 103 JUNCTION BOX	--	MANUFACTURER CABLE IN 2-1/2"C.
402	PUMP NO. 103 POWER	480V	280 HP	PUMP NO. 103 JUNCTION BOX	PUMP STARTER	--	3#1, #6 GND., 2" C.
403	COMBINED PUMP CONTROLS	120V	280 HP	PUMP NO. 103 JUNCTION BOX	CONTROL PANEL	--	COMBINE 400 & 500 WIRING, 10#14 1"C.
405	PUMP NO. 103 CONTROLS	120V	--	STARTER IN MOTOR CONTROL CENTER	CONTROL PANEL	--	12#14 1"C.
600	LIGHTING PANEL FEEDER	480V	--	MOTOR CONTROL CENTER	LIGHTING TRANSFORMER	--	2#8, #6 GND., 1"C.
601	LIGHTING PANEL GROUND	--	--	LIGHTING PANEL	GROUND FIELD	--	#8 GND., 1"C.
602	LIGHTING PANEL FEEDER	120/240V	--	LIGHTING TRANSFORMER	LIGHTING PANEL	--	3#4, #8 GND., 1-1/4"C.
800	ODOR CONTROL FEEDER	480V	30A	CONTROL PANEL	ODOR CONTROL PANEL	--	3#10 AWG., #10 GND., 1" C.
1000	LEVEL TRANSMITTER LT-1	24VDC	--	TRANSMITTER	TRANSMITTER JUNCTION BOX	--	2-1/2"C.
1001	LEVEL TRANSMITTER LT-2	24VDC	--	TRANSMITTER	TRANSMITTER JUNCTION BOX	--	2-1/2"C.
1002	COMBINED LEVEL TRANSMITTERS & FLOAT SWITCH	24VDC	--	CONTROL PANEL	TRANSMITTER JUNCTION BOX	--	2 TRI, 4 #14, 2"C.
1003	WELL FLOAT SWITCHES	24VDC	--	TRANSMITTER JUNCTION BOX	FLOAT SWITCH NO.1	--	MANUFACTURER CABLE IN 2-1/2"C.
1100	120VAC FOR RECEPTACLE	--	--	LIGHTING PANEL	RECEPTACLE NEXT TO TRANSMITTER J-BOX	--	L11 (IND.), 2#12 #12G, 1"C, L2 (OUTD.)
1200	120VAC FOR RECEPTACLE	--	--	LIGHTING PANEL	RECEPTACLE NEXT TO PUMP NO. 103 J-BOX	--	L13 (IND.), 2#12 #12G, 1"C, L4 (OUTD.)
1400	ODOR CONTROL SIGNAL	24VDC	--	CONTROL PANEL	ODOR CONTROL PANEL	--	4 #14, #14 GND., 1"C.
1401	ODOR CONTROL BLOWER	480V	3 HP	ODOR CONTROL PANEL	ODOR CONTROL BLOWER	--	3#12, #12G., 1"C.
1500	CHEMICAL INJECTION PUMP	120V	--	LIGHTING PANEL	CHEMICAL INJECTION PUMP	--	2#12, #12G., 1"C.
1501	LEVEL TRANSMITTER FOR CHEMICAL TANK	24VDC	--	CONTROL PANEL	LEVEL TRANSMITTER "LT-3" ON CHEMICAL TANK	--	1-TRI, 1"C.

NO.	DATE	REVISION	APP.

NOTICE:
FOR YOUR SAFETY, YOU ARE REQUIRED BY TEXAS LAW TO CALL 811 AT LEAST 48 HOURS BEFORE YOU DIG SO THAT UNDERGROUND LINES CAN BE MARKED. THIS SIGNATURE DOES NOT FULFILL YOUR OBLIGATION TO CALL 811

VERIFICATION OF PRIVATE UTILITY LINES

Date

CenterPoint Energy natural gas utilities shown. (Gas service lines are not shown). This signature not be used for conflict verification.

Signature valid for six months.

Date

CenterPoint Energy/UNDERGROUND Electrical Facilities Verification ONLY. (This signature verifies existing underground facilities – not to be used for conflict verification)

Signature valid for six months.

Date

Approved for AT&T underground conduit facilities only.
Signature valid for one year.

PAPE-DAWSON
2107 CITYWEST BLVD, 3RD FLR I HOUSTON, TX 77042 I 713.428.2400
TEXAS ENGINEERING FIRM #470 I TEXAS SURVEYING FIRM #10028800

GAI
Gupta & Associates, Inc.
CONSULTING ENGINEERING
Registration No. F-2593
302 Dennis St.
Houston, Texas 77006
Tel: 713-636-2936
Fax: 713-636-2987
email: hfoouzan@gaiconsulting.com

SURVEYED BY:
PAPE-DAWSON ENGINEERS
FB NO. 24-018

THIS DOCUMENT IS RELEASED FOR INTERIM REVIEW UNDER THE AUTHORIZATION OF HOSS FOROUZAN, P.E. (#77748) AND IS **NOT TO BE USED FOR CONSTRUCTION.**

CITY OF HOUSTON
HOUSTON PUBLIC WORKS

LIFT STATION REHABILITATION AND RECONSTRUCTION
BEN'S BRANCH, WOODLAND RIDGE, ELMWOOD HILLS, FOREST SHORES, TRAIL RIVER, RIVERLAWN

ELECTRICAL

TRAIL RIVER LIFT STATION CONDUIT SCHEDULE

WBS NUMBER	FOR CITY OF HOUSTON USE ONLY
R-000267-0180-3	
DRAWING SCALE	
AS NOTED	
CITY OF HOUSTON PM	
BRENDA JOHNSON P.E.	
SHEET NO. XX OF XX	

TR-E-11

FILE PATH: O:\H8107_Lift Station Rehabilitation And Reconstruction (Pape Dawson)\6 Drawings\Electrical\Working\Trail River\H8107_TR-E-11.dwg

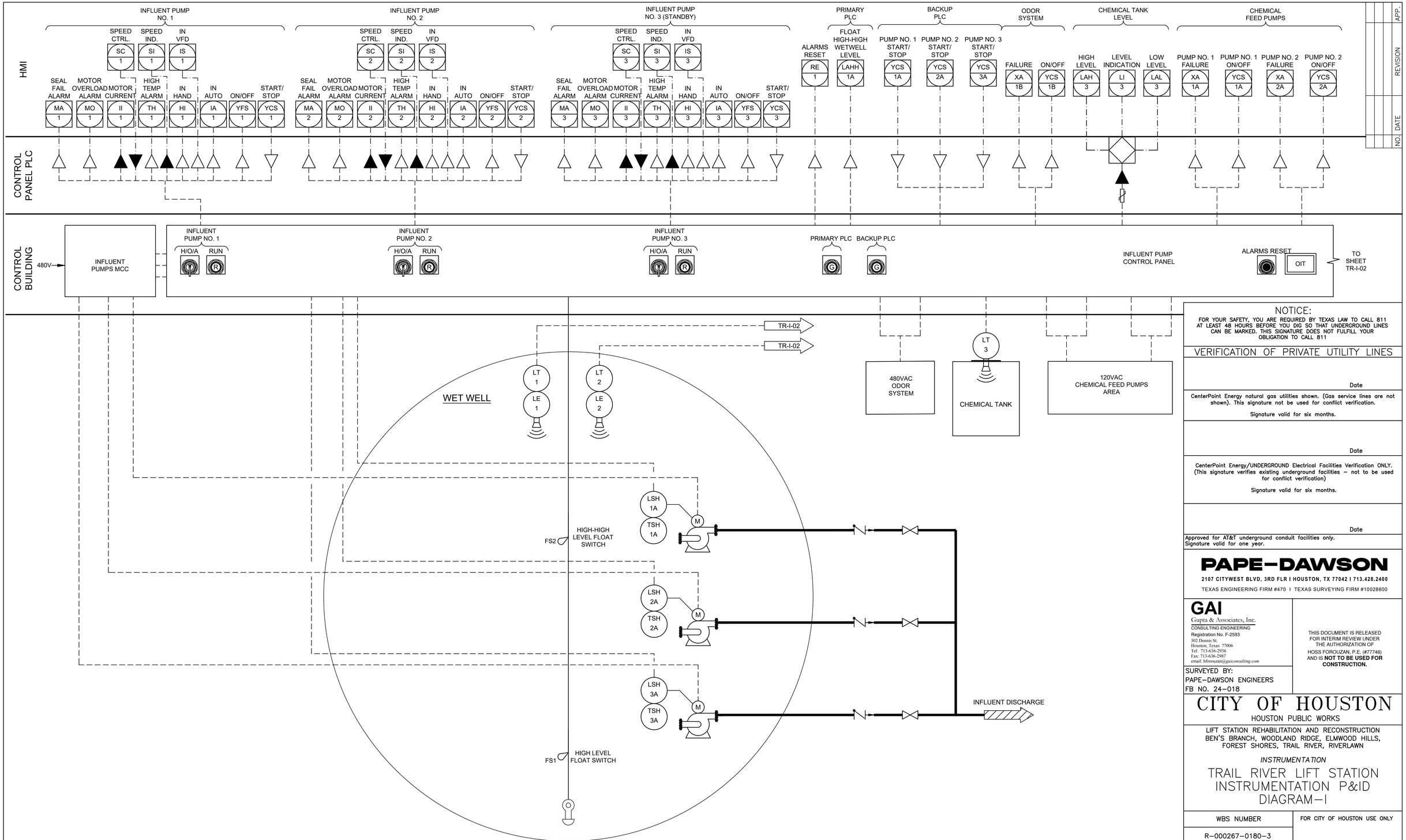

FILE PATH: O:\H8107_Lift Station Rehabilitation And Reconstruction (Pape Dawson)\6 Drawings\Instrumentation And Control\Working\Trail River\H8107_TR-I-01.dwg

NO. | DATE | REVISION | APP.

NOTICE:
FOR YOUR SAFETY, YOU ARE REQUIRED BY TEXAS LAW TO CALL 811 AT LEAST 48 HOURS BEFORE YOU DIG SO THAT UNDERGROUND LINES CAN BE MARKED. THIS SIGNATURE DOES NOT FULFILL YOUR OBLIGATION TO CALL 811

VERIFICATION OF PRIVATE UTILITY LINES

Date

CenterPoint Energy natural gas utilities shown. (Gas service lines are not shown). This signature not be used for conflict verification.

Signature valid for six months.

Date

CenterPoint Energy/UNDERGROUND Electrical Facilities Verification ONLY. (This signature verifies existing underground facilities – not to be used for conflict verification)

Signature valid for six months.

Date

Approved for AT&T underground conduit facilities only.
Signature valid for one year.

PAPE–DAWSON
2107 CITYWEST BLVD, 3RD FLR I HOUSTON, TX 77042 I 713.428.2400
TEXAS ENGINEERING FIRM #470 I TEXAS SURVEYING FIRM #10028800

GAI
Gupta & Associates, Inc.
CONSULTING ENGINEERING
Registration No. F-2593
302 Dennis St.
Houston, Texas 77006
Tel: 713-636-2936
Fax: 713-636-2987
email: hforouzan@gaiconsulting.com

SURVEYED BY:
PAPE–DAWSON ENGINEERS
FB NO. 24–018

THIS DOCUMENT IS RELEASED FOR INTERIM REVIEW UNDER THE AUTHORIZATION OF HOSS FOROUZAN, P.E. (#77748) AND IS **NOT TO BE USED FOR CONSTRUCTION.**

CITY OF HOUSTON
HOUSTON PUBLIC WORKS

LIFT STATION REHABILITATION AND RECONSTRUCTION
BEN'S BRANCH, WOODLAND RIDGE, ELMWOOD HILLS, FOREST SHORES, TRAIL RIVER, RIVERLAWN

INSTRUMENTATION

TRAIL RIVER LIFT STATION INSTRUMENTATION P&ID DIAGRAM–I

WBS NUMBER	FOR CITY OF HOUSTON USE ONLY
R–000267–0180–3	
DRAWING SCALE	
AS NOTED	
CITY OF HOUSTON PM	
BRENDA JOHNSON P.E.	
SHEET NO. XX OF XX	

TR–I–01

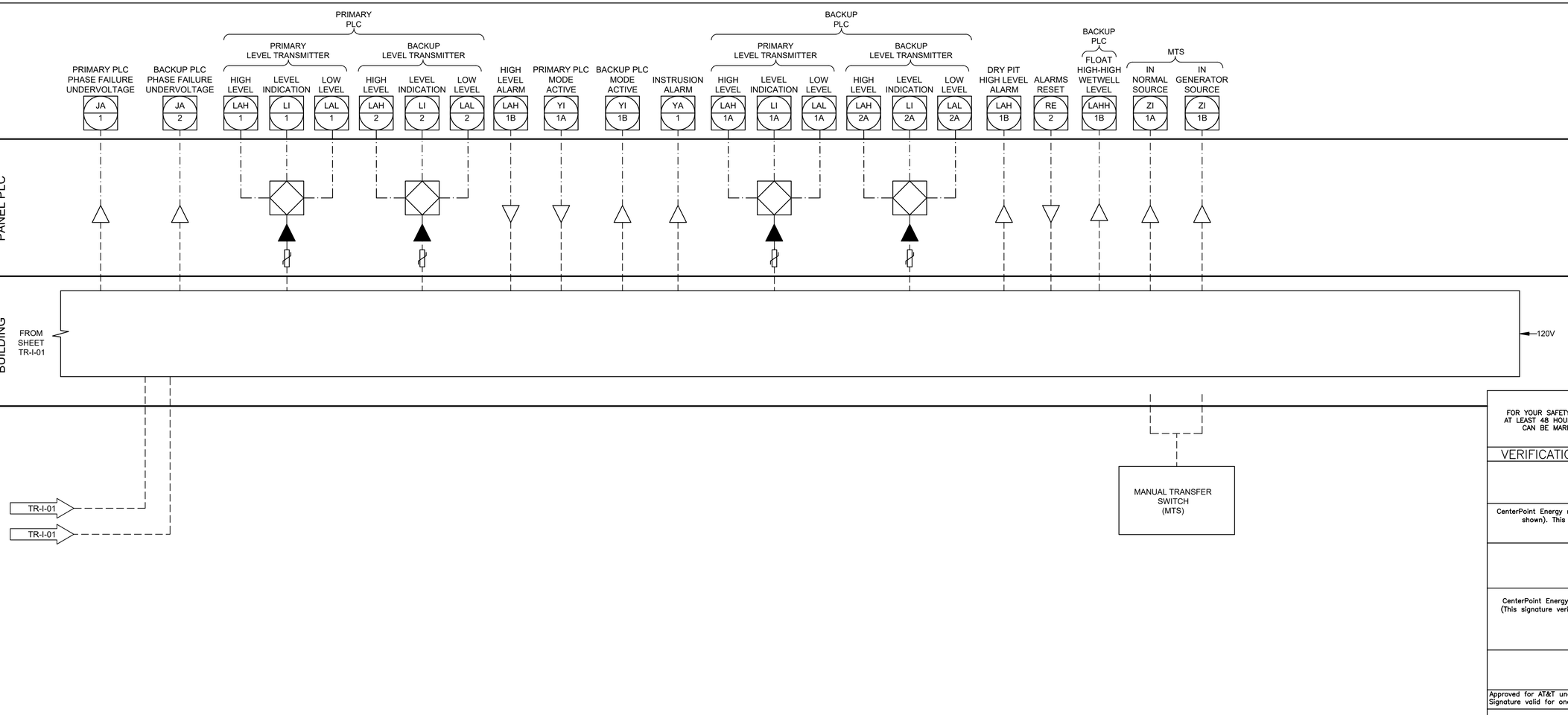

NO.	DATE	REVISION	APP.

NOTICE:
FOR YOUR SAFETY, YOU ARE REQUIRED BY TEXAS LAW TO CALL 811 AT LEAST 48 HOURS BEFORE YOU DIG SO THAT UNDERGROUND LINES CAN BE MARKED. THIS SIGNATURE DOES NOT FULFILL YOUR OBLIGATION TO CALL 811

VERIFICATION OF PRIVATE UTILITY LINES

Date

CenterPoint Energy natural gas utilities shown. (Gas service lines are not shown). This signature not be used for conflict verification.

Signature valid for six months.

Date

CenterPoint Energy/UNDERGROUND Electrical Facilities Verification ONLY. (This signature verifies existing underground facilities – not to be used for conflict verification)

Signature valid for six months.

Date

Approved for AT&T underground conduit facilities only.
Signature valid for one year.

PAPE-DAWSON
2107 CITYWEST BLVD, 3RD FLR I HOUSTON, TX 77042 I 713.428.2400
TEXAS ENGINEERING FIRM #470 I TEXAS SURVEYING FIRM #10028800

GAI
Gupta & Associates, Inc.
CONSULTING ENGINEERING
Registration No. F-2593
302 Dennis St.
Houston, Texas 77006
Tel: 713-636-2936
Fax: 713-636-2987
email: hforouzan@gaiconsulting.com

SURVEYED BY:
PAPE-DAWSON ENGINEERS
FB NO. 24-018

THIS DOCUMENT IS RELEASED FOR INTERIM REVIEW UNDER THE AUTHORIZATION OF HOSS FOROUZAN, P.E. (#77748) AND IS **NOT TO BE USED FOR CONSTRUCTION.**

CITY OF HOUSTON
HOUSTON PUBLIC WORKS

LIFT STATION REHABILITATION AND RECONSTRUCTION
BEN'S BRANCH, WOODLAND RIDGE, ELMWOOD HILLS, FOREST SHORES, TRAIL RIVER, RIVERLAWN

INSTRUMENTATION

TRAIL RIVER LIFT STATION INSTRUMENTATION P&ID DIAGRAM-II

WBS NUMBER	FOR CITY OF HOUSTON USE ONLY
R-000267-0180-3	
DRAWING SCALE	
AS NOTED	
CITY OF HOUSTON PM	
BRENDA JOHNSON P.E.	
SHEET NO. XX OF XX	

TR-I-02

FILE PATH: O:\H8107_Lift Station Rehabilitation And Reconstruction (Pape Dawson)\6 Drawings\Instrumentation And Control\Working\Trail River\H8107_TR-I-02.dwg

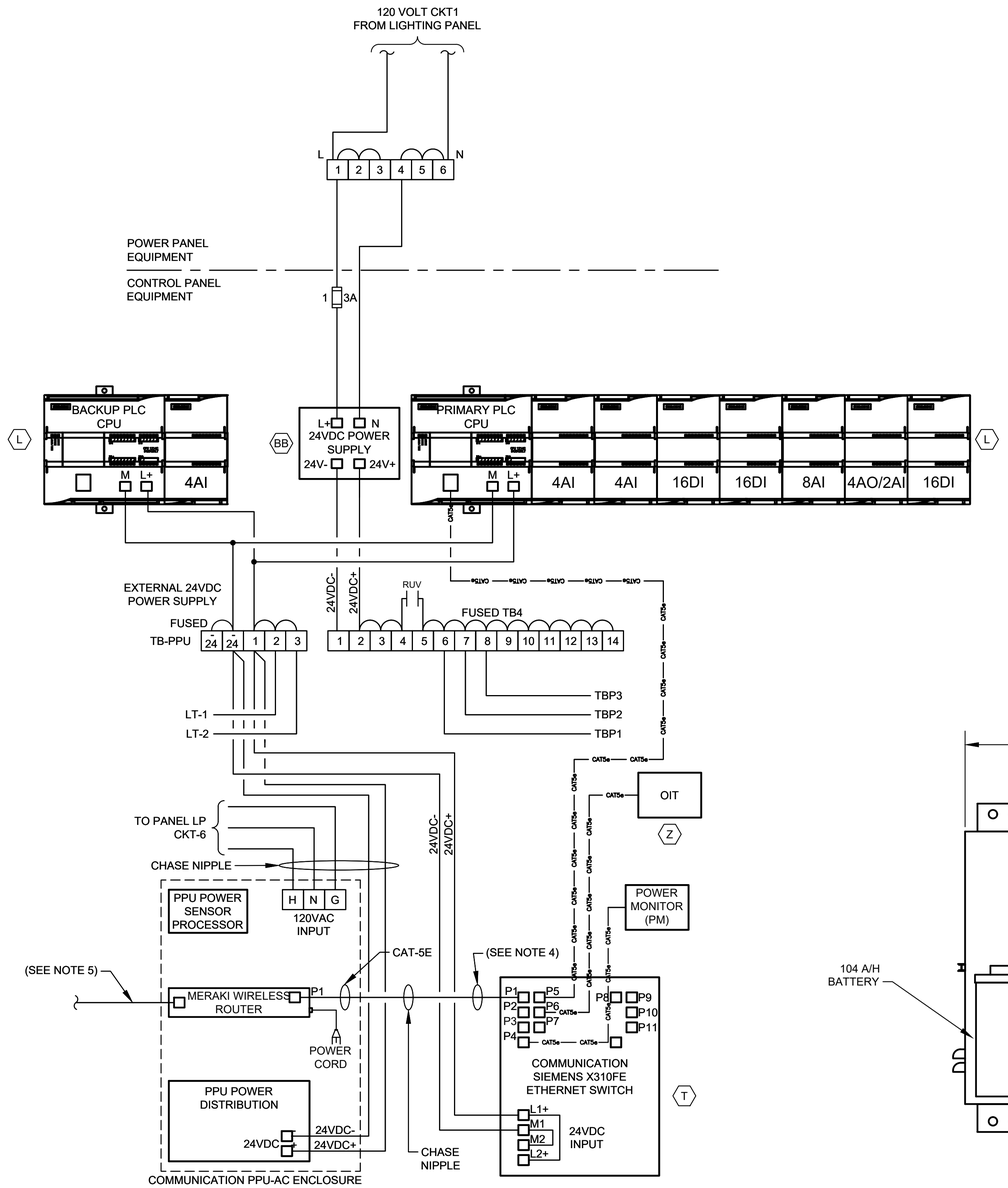

CONTROL POWER &
COMMUNICATIONS WIRING

DIAGRAM

NTS

(SEE NOTE 2 & 6)

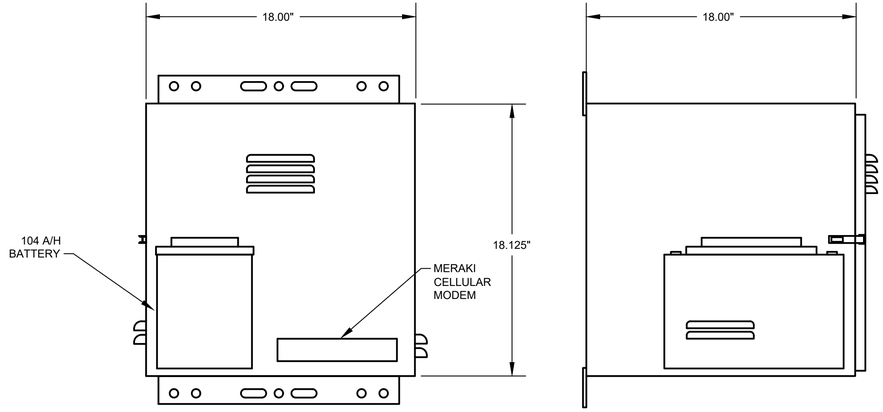

PPU-AC
CONTROL ENCLOSURE

ELEVATION

NTS

(SEE NOTE 7)

NOTES:

1. REFER TO SPEC SECTION 16120 FOR CONDUCTOR COLOR CODE.
2. THE PLC POWER SUPPLY SHALL FEED THE 24VDC I/O.
3. COMMUNICATION PPU-AC & SCADA SHALL BE PROVIDED BY CONTRACTOR INCLUDING TO RUN CONDUITS & WIRES.
4. ETHERNET CABLE FOR MERAKI CELLULAR ROUTER (P1).
5. POE CABLE TO RADIO.
6. WHERE APPLICABLE, FOR SIZE 6 STARTER OR GREATER, USE MULTILIN 869 VIA PROFINET COMMUNICATION.

NO.	DATE	REVISION	APP.

NOTICE:
FOR YOUR SAFETY, YOU ARE REQUIRED BY TEXAS LAW TO CALL 811 AT LEAST 48 HOURS BEFORE YOU DIG SO THAT UNDERGROUND LINES CAN BE MARKED. THIS SIGNATURE DOES NOT FULFILL YOUR OBLIGATION TO CALL 811

VERIFICATION OF PRIVATE UTILITY LINES

Date

CenterPoint Energy natural gas utilities shown. (Gas service lines are not shown). This signature not be used for conflict verification.

Signature valid for six months.

Date

CenterPoint Energy/UNDERGROUND Electrical Facilities Verification ONLY. (This signature verifies existing underground facilities – not to be used for conflict verification)

Signature valid for six months.

Date

Approved for AT&T underground conduit facilities only.
Signature valid for one year.

PAPE–DAWSON
2107 CITYWEST BLVD, 3RD FLR I HOUSTON, TX 77042 I 713.428.2400
TEXAS ENGINEERING FIRM #470 I TEXAS SURVEYING FIRM #10028800

GAI
Gupta & Associates, Inc.
CONSULTING ENGINEERING
Registration No. F-2593
302 Dennis St.
Houston, Texas 77006
Tel: 713-636-2936
Fax: 713-636-2987
email: hforouzan@gaiconsulting.com

THIS DOCUMENT IS RELEASED FOR INTERIM REVIEW UNDER THE AUTHORIZATION OF HOSS FOROUZAN, P.E. (#77748) AND IS **NOT TO BE USED FOR CONSTRUCTION.**

SURVEYED BY:
PAPE–DAWSON ENGINEERS
FB NO. 24–018

CITY OF HOUSTON

HOUSTON PUBLIC WORKS

LIFT STATION REHABILITATION AND RECONSTRUCTION
BEN'S BRANCH, WOODLAND RIDGE, ELMWOOD HILLS, FOREST SHORES, TRAIL RIVER, RIVERLAWN

INSTRUMENTATION

TRAIL RIVER LIFT STATION COMMUNICATION DIAGRAM

WBS NUMBER	FOR CITY OF HOUSTON USE ONLY
R–000267–0180–3	
DRAWING SCALE	
AS NOTED	
CITY OF HOUSTON PM	
BRENDA JOHNSON P.E.	
SHEET NO. XX OF XX	

TR–I–03

FILE PATH: O:\H8107_Lift Station Rehabilitation And Reconstruction (Pape Dawson)\6 Drawings\Instrumentation And Control\Working\Trail River\H8107_TR–I–03.dwg

EQUIPMENT AND DEVICE SCHEDULE

ITEM	QUANTITY	DESCRIPTION
A	1	SINGLE CHANNEL INTRINSICALLY SAFE RELAY
B	2	ANALOG SIGNAL ISOLATOR
C	4	PUMP PROTECTION MODULE
D	*	NOT USED
E	4	HAND-OFF-AUTO SWITCH, 3 POSITION, HEAVY-DUTY OIL TIGHT WITH 2 SETS OF CONTACT BLOCKS (PUMP CONTROL)
F	4	INDICATING LIGHT, HEAVY DUTY, OILTIGHT, RED, 24 VDC, LED, WITH "RUN" LEGEND
G	*	NOT USED.
H	1	SWITCH FOR CABINET LIGHT, 120V, 20A, SPST
I	2	DUPLEX RECEPTACLE, 120V, 20A, 2 WIRE, GROUNDED, GFCI TYPE
J	1	24" LED STRIP LIGHT 120V SUITABLE FOR ZERO DEGREE OPERATION
K	*	NAMEPLATES, SEE SPECIFICATIONS (SEE NAMEPLATE SCHEDULE)
L	2	PROGRAMMABLE LOGIC CONTROLLER WITH EXPANSION UNIT
M	*	CONTROL RELAY 24VDC RELAY WITH THREE FORM C CONTACTS AND 11 PIN SOCKET BASE
N	-	NOT USED
O	-	NOT USED
P	1	NEMA 12 GASKETED STEEL ENCLOSURES WITHOUT VENTS 72" H X 20" D X 48" W
Q	*	TERMINAL BLOCK
R	1	WIRE DUCT 2" WIDE X 2" DEEP MINIMUM
S	1	GROUND BUS
T	1	COMMUNICATION ETHERNET SWITCH
U	9	CARTRIDGE
V	1	PUSHBUTTON, BLACK WITH RESET LEGEND
W	-	NOT USED
X	*	FUSED TERMINAL BLOCKS
Y	1	POWER SURGE PROTECTOR - CONTROL POWER
Z	1	PROGRAMMING SCREEN (OIT)
AA	*	120VAC SYSTEM FUSES
BB	1	120VAC - 24VDC POWER SUPPLY, 5A
CC	*	NOT USED
DD	2	INDICATING LIGHT, HEAVY DUTY, OILTIGHT, GREEN, 24VDC, LED WITH "BACKUP PLC" & "PRIMARY PLC" LEGEND
EE	3	ANALOG I/O SURGE SUPPRESSOR
FF	-	NOT USED

* - AS SCHEDULED

NAMEPLATE SCHEDULE

DESIGNATION	ENGRAVED
N1	PUMP STATION DESIGNATION
N2	PUMP NO. 1
N3	PUMP NO. 2
N4	PUMP NO. 3
N5	NOT USED.
N6	NOT USED.
N7	NOT USED.
N8	NOT USED.
N9	NOT USED.
N10	PROGRAMMING SCREEN
N11	NOT USED.
N12	PRIMARY PLC
N13	BACKUP PLC
N14	MOTOR DATA HORSEPOWER (OUTPUT) ---------- RPM AT FULL LOAD ---------- TIME RATING ---------- FREQUENCY ---------- NUMBER OF PHASES ---------- MODEL NUMBER ---------- RATED VOLTAGE ---------- SERVICE FACTOR ---------- FULL LOAD AMPS ---------- INSULATION CLASS ---------- NEMA DESIGN LETTER ---------- TEMPERATURE RISE ---------- NEMA FRAME SIZE ---------- DATE OF MANUFACTURE ---------- THERMO PROTECTION (IF REQUIRED) -- MOISTURE PROTECTION (IF REQUIRED)-

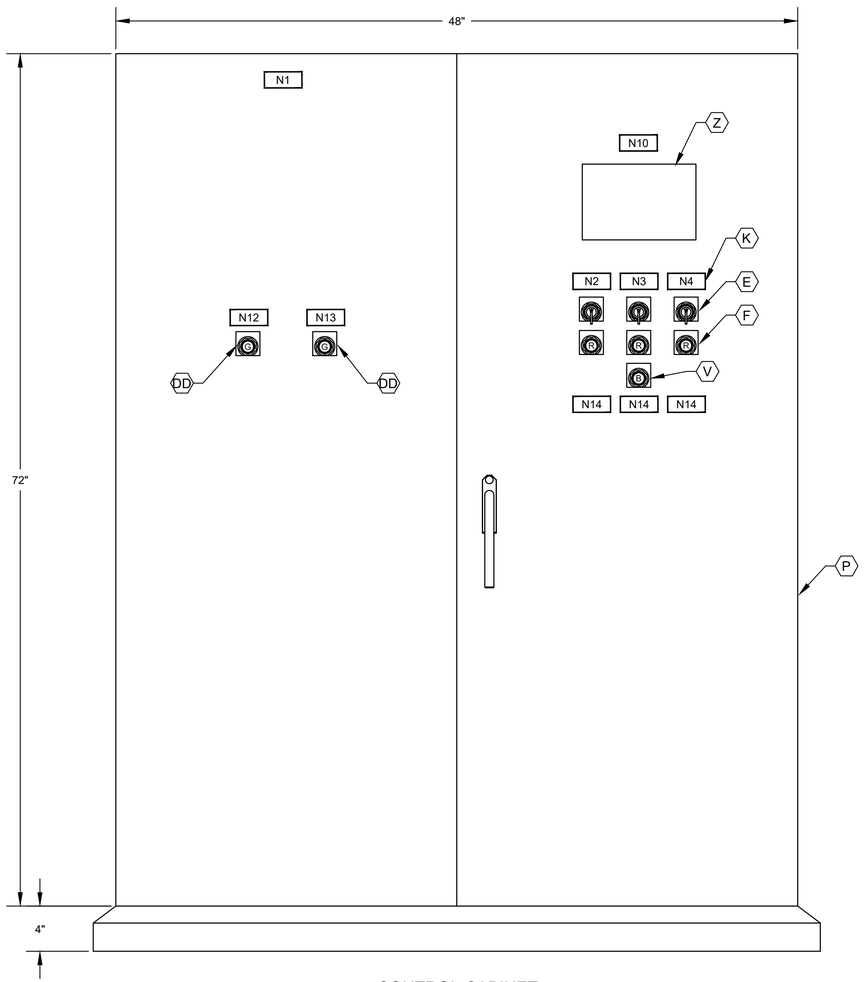

CONTROL CABINET
FRONT DOOR ELEVATION

NOTES:

1. NAMEPLATES SHALL BE MOUNTED TO PANELS USING STAINLESS STEEL HARDWARE.
2. REFER SPECIFICATIONS FOR ALL PANEL COMPONENTS.

NO.	DATE	REVISION	APP.

NOTICE:
FOR YOUR SAFETY, YOU ARE REQUIRED BY TEXAS LAW TO CALL 811 AT LEAST 48 HOURS BEFORE YOU DIG SO THAT UNDERGROUND LINES CAN BE MARKED. THIS SIGNATURE DOES NOT FULFILL YOUR OBLIGATION TO CALL 811

VERIFICATION OF PRIVATE UTILITY LINES

Date

CenterPoint Energy natural gas utilities shown. (Gas service lines are not shown). This signature not be used for conflict verification.

Signature valid for six months.

Date

CenterPoint Energy/UNDERGROUND Electrical Facilities Verification ONLY. (This signature verifies existing underground facilities – not to be used for conflict verification)

Signature valid for six months.

Date

Approved for AT&T underground conduit facilities only.
Signature valid for one year.

PAPE–DAWSON
2107 CITYWEST BLVD, 3RD FLR I HOUSTON, TX 77042 I 713.428.2400
TEXAS ENGINEERING FIRM #470 I TEXAS SURVEYING FIRM #10028800

GAI
Gupta & Associates, Inc.
CONSULTING ENGINEERING
Registration No. F-2593
302 Dennis St.
Houston, Texas 77006
Tel: 713-636-2936
Fax: 713-636-2987
email: hforouzan@gaiconsulting.com

SURVEYED BY:
PAPE–DAWSON ENGINEERS
FB NO. 24–018

THIS DOCUMENT IS RELEASED FOR INTERIM REVIEW UNDER THE AUTHORIZATION OF HOSS FOROUZAN, P.E. (#77748) AND IS **NOT TO BE USED FOR CONSTRUCTION.**

CITY OF HOUSTON
HOUSTON PUBLIC WORKS

LIFT STATION REHABILITATION AND RECONSTRUCTION
BEN'S BRANCH, WOODLAND RIDGE, ELMWOOD HILLS, FOREST SHORES, TRAIL RIVER, RIVERLAWN

INSTRUMENTATION

TRAIL RIVER LIFT STATION CONTROL CABINET EQUIPMENT LAYOUT & SCHEDULE

WBS NUMBER	FOR CITY OF HOUSTON USE ONLY
R–000267–0180–3	
DRAWING SCALE	
AS NOTED	
CITY OF HOUSTON PM	
BRENDA JOHNSON P.E.	
SHEET NO. XX OF XX	

TR–I–04

FILE PATH: O:\H8107_Lift Station Rehabilitation And Reconstruction (Pape Dawson)\6 Drawings\Instrumentation And Control\Working\Trail River\H8107_TR-I-04.dwg

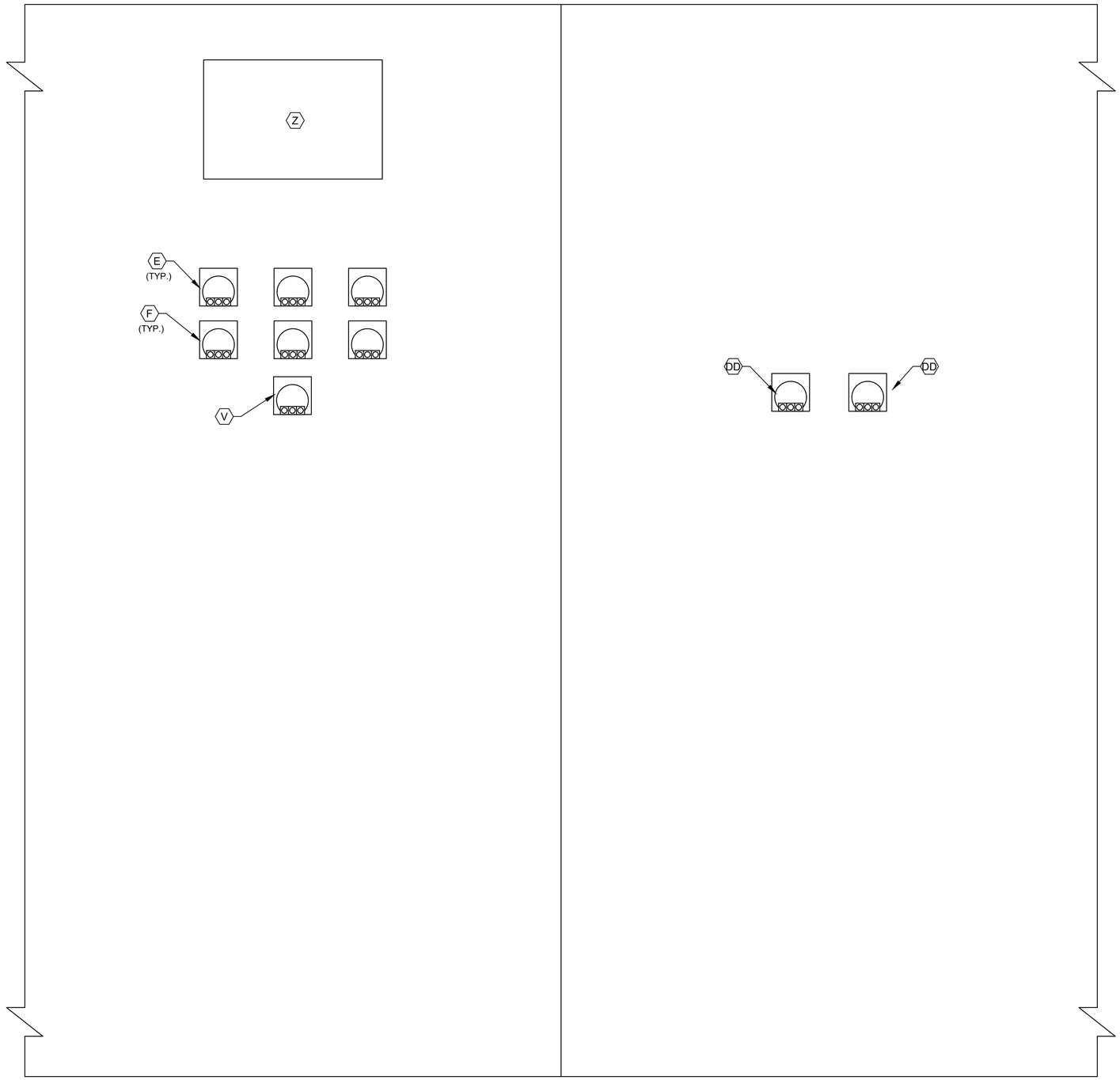

CONTROL CABINET
BACK DOOR ELEVATION

NOTES:

1. SEE SHEET TR-I-04 FOR EQUIPMENT SCHEDULE.

NO.	DATE	REVISION	APP.

NOTICE:
FOR YOUR SAFETY, YOU ARE REQUIRED BY TEXAS LAW TO CALL 811 AT LEAST 48 HOURS BEFORE YOU DIG SO THAT UNDERGROUND LINES CAN BE MARKED. THIS SIGNATURE DOES NOT FULFILL YOUR OBLIGATION TO CALL 811

VERIFICATION OF PRIVATE UTILITY LINES

Date

CenterPoint Energy natural gas utilities shown. (Gas service lines are not shown). This signature not be used for conflict verification.

Signature valid for six months.

Date

CenterPoint Energy/UNDERGROUND Electrical Facilities Verification ONLY. (This signature verifies existing underground facilities – not to be used for conflict verification)

Signature valid for six months.

Date

Approved for AT&T underground conduit facilities only.
Signature valid for one year.

PAPE-DAWSON
2107 CITYWEST BLVD, 3RD FLR I HOUSTON, TX 77042 I 713.428.2400
TEXAS ENGINEERING FIRM #470 I TEXAS SURVEYING FIRM #10028800

GAI
Gupta & Associates, Inc.
CONSULTING ENGINEERING
Registration No. F-2593
302 Dennis St.
Houston, Texas 77006
Tel: 713-636-2936
Fax: 713-636-2987
email: hforouzan@gaiconsulting.com

SURVEYED BY:
PAPE-DAWSON ENGINEERS
FB NO. 24-018

THIS DOCUMENT IS RELEASED FOR INTERIM REVIEW UNDER THE AUTHORIZATION OF HOSS FOROUZAN, P.E. (#77748) AND IS **NOT TO BE USED FOR CONSTRUCTION.**

CITY OF HOUSTON
HOUSTON PUBLIC WORKS

LIFT STATION REHABILITATION AND RECONSTRUCTION
BEN'S BRANCH, WOODLAND RIDGE, ELMWOOD HILLS, FOREST SHORES, TRAIL RIVER, RIVERLAWN

INSTRUMENTATION

TRAIL RIVER LIFT STATION CONTROL CABINET BACK DOOR ELEVATION

WBS NUMBER	FOR CITY OF HOUSTON USE ONLY
R-000267-0180-3	
DRAWING SCALE	
AS NOTED	
CITY OF HOUSTON PM	
BRENDA JOHNSON P.E.	
SHEET NO. XX OF XX	

TR-I-05

FILE PATH: O:\H8107_Lift Station Rehabilitation And Reconstruction (Pape Dawson)\6 Drawings\Instrumentation And Control\Working\Trail River\H8107_TR-I-05.dwg

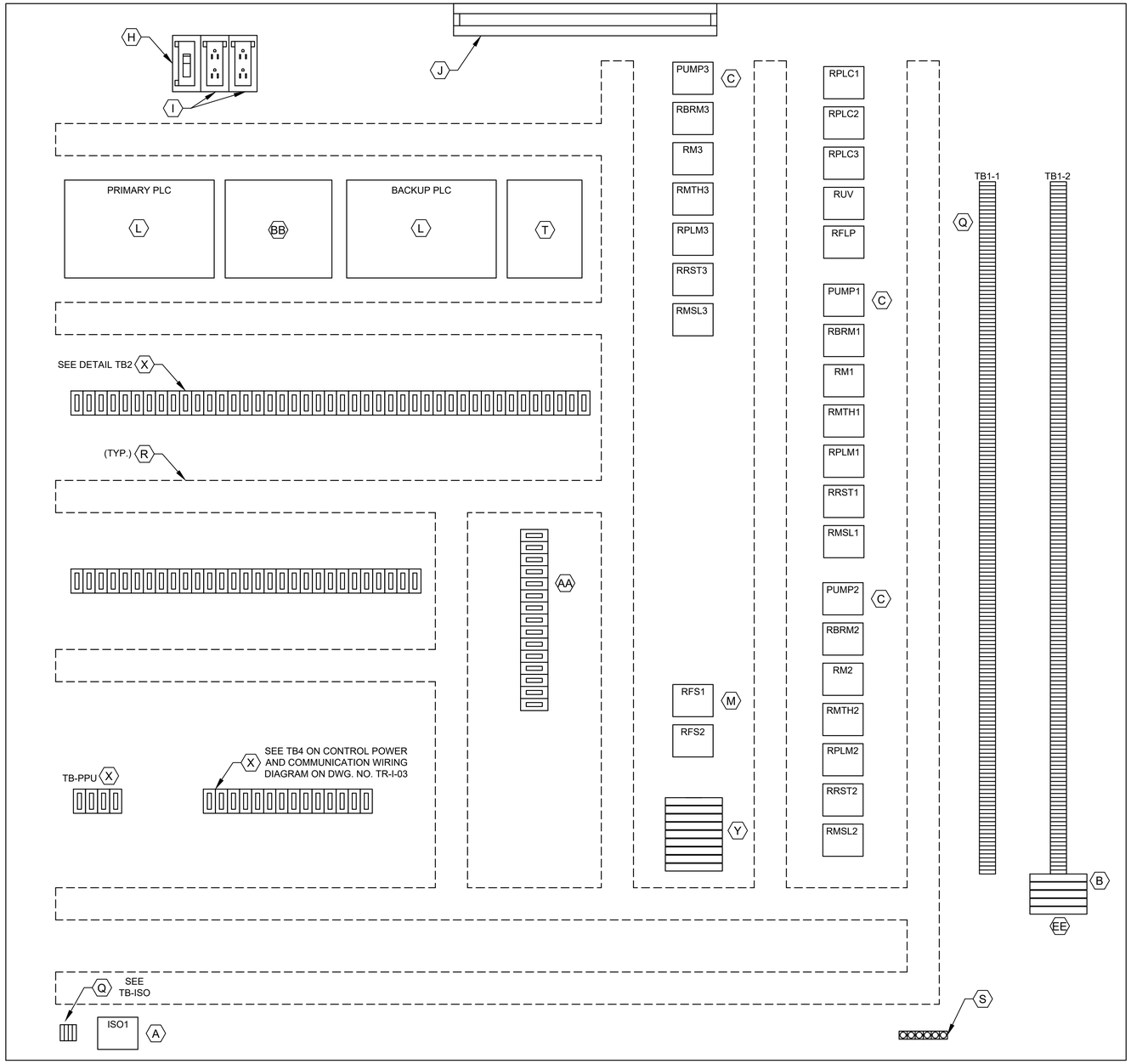

CONTROL PANEL ELEVATION

LEGEND	
TAG	DESCRIPTION
RMTH	MOTOR HIGH TEMPERATURE ALARM RELAY
RPLMP	PLC PUMP RUN RELAY
RRST	PUMP RESET AUX RELAY
RPLC	PLC MODE AUX RELAY
RM	PUMP RUN AUX RELAY
RUV	UNDER VOLTAGE RELAY
RBRM	BACKUP SYSTEM RUN RELAY
ISO	INTRINSICALLY SAFE RELAY
RFS	PUMP RUN FLOAT SWITCH RELAY
RMSL	MOTOR SEAL LEAK ALARM RELAY
RFLP	FLOAT LOCKOUT PUMP RELAY

DETAIL TB1-1
L1A
L1N
SPARE
3
3N
SPARE
49
50
51
52
53
54
1004
1
24V-
24V-
SPARE
1002
2
11
1001
1001A
12
1003
1003A
34
3N
19
20
102
103
3P1
109
110
112
116
117
120
121
122
123
124
125
126
127
SPARE
SPARE
202
203
3P2
209
210
212
216
217
220
221
222
223
224
225
226
227

DETAIL TB1-2
SPARE
SPARE
302
303
3P3
309
310
312
316
317
320
321
322
323
324
325
326
327
SPARE
SPARE

DETAIL TB2
36A
37A
50
52
54
52A
52A
54A
L+
M
35B
38B
41B
44B
SPARE
SPARE
47B
50B
53B
13B
13AB
B
L+
M
14B
14AB
14GB
119
SPARE
L+
M
13
13A
13G
14
14A
14G
1M
2M
1L
3
30
32
34
37
38
41
33B
45
18B
SPARE

DETAIL TB2
100
112
113
114
115
117
118
119
120
121
SPARE
200
212
213
214
215
217
218
219
220
221
SPARE
300
312
313
314
315
317
318
319
320
321
SPARE

DETAIL TB-ISO
1500
1501
1503
1504

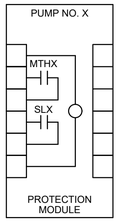

PUMP PROTECTION MODULE DETAIL, ITEM C

NOTE: REPLACE "X" WITH APPROPRIATE PUMP NO.

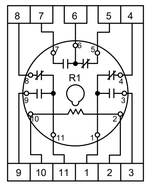

RELAY DETAIL ITEM M

NOTES:

1. SEE SHEET TR-I-04 FOR EQUIPMENT SCHEDULE.

NOTICE:
FOR YOUR SAFETY, YOU ARE REQUIRED BY TEXAS LAW TO CALL 811 AT LEAST 48 HOURS BEFORE YOU DIG SO THAT UNDERGROUND LINES CAN BE MARKED. THIS SIGNATURE DOES NOT FULFILL YOUR OBLIGATION TO CALL 811

VERIFICATION OF PRIVATE UTILITY LINES

Date

CenterPoint Energy natural gas utilities shown. (Gas service lines are not shown). This signature not be used for conflict verification.

Signature valid for six months.

Date

CenterPoint Energy/UNDERGROUND Electrical Facilities Verification ONLY. (This signature verifies existing underground facilities – not to be used for conflict verification)

Signature valid for six months.

Date

Approved for AT&T underground conduit facilities only.
Signature valid for one year.

PAPE–DAWSON
2107 CITYWEST BLVD, 3RD FLR I HOUSTON, TX 77042 I 713.428.2400
TEXAS ENGINEERING FIRM #470 I TEXAS SURVEYING FIRM #10028800

GAI
Gupta & Associates, Inc.
CONSULTING ENGINEERING
Registration No. F-2593
302 Dennis St
Houston, Texas 77006
Tel: 713-636-2936
Fax: 713-636-2987
email: hforouzan@guiconsulting.com

SURVEYED BY:
PAPE–DAWSON ENGINEERS
FB NO. 24–018

THIS DOCUMENT IS RELEASED FOR INTERIM REVIEW UNDER THE AUTHORIZATION OF HOSS FOROUZAN, P.E. (#77748) AND IS **NOT TO BE USED FOR CONSTRUCTION.**

CITY OF HOUSTON
HOUSTON PUBLIC WORKS

LIFT STATION REHABILITATION AND RECONSTRUCTION
BEN'S BRANCH, WOODLAND RIDGE, ELMWOOD HILLS, FOREST SHORES, TRAIL RIVER, RIVERLAWN

INSTRUMENTATION

TRAIL RIVER LIFT STATION CONTROL CABINET EQUIPMENT LAYOUT

WBS NUMBER	FOR CITY OF HOUSTON USE ONLY
R–000267–0180–3	
DRAWING SCALE	
AS NOTED	
CITY OF HOUSTON PM	
BRENDA JOHNSON P.E.	
SHEET NO. XX OF XX	

TR–I–06

NO.	DATE	REVISION	APP.

FILE PATH: O:\H8107_Lift Station Rehabilitation And Reconstruction (Pape Dawson)\6 Drawings\Instrumentation And Control\Working\Trail River\H8107_TR-I-06.dwg

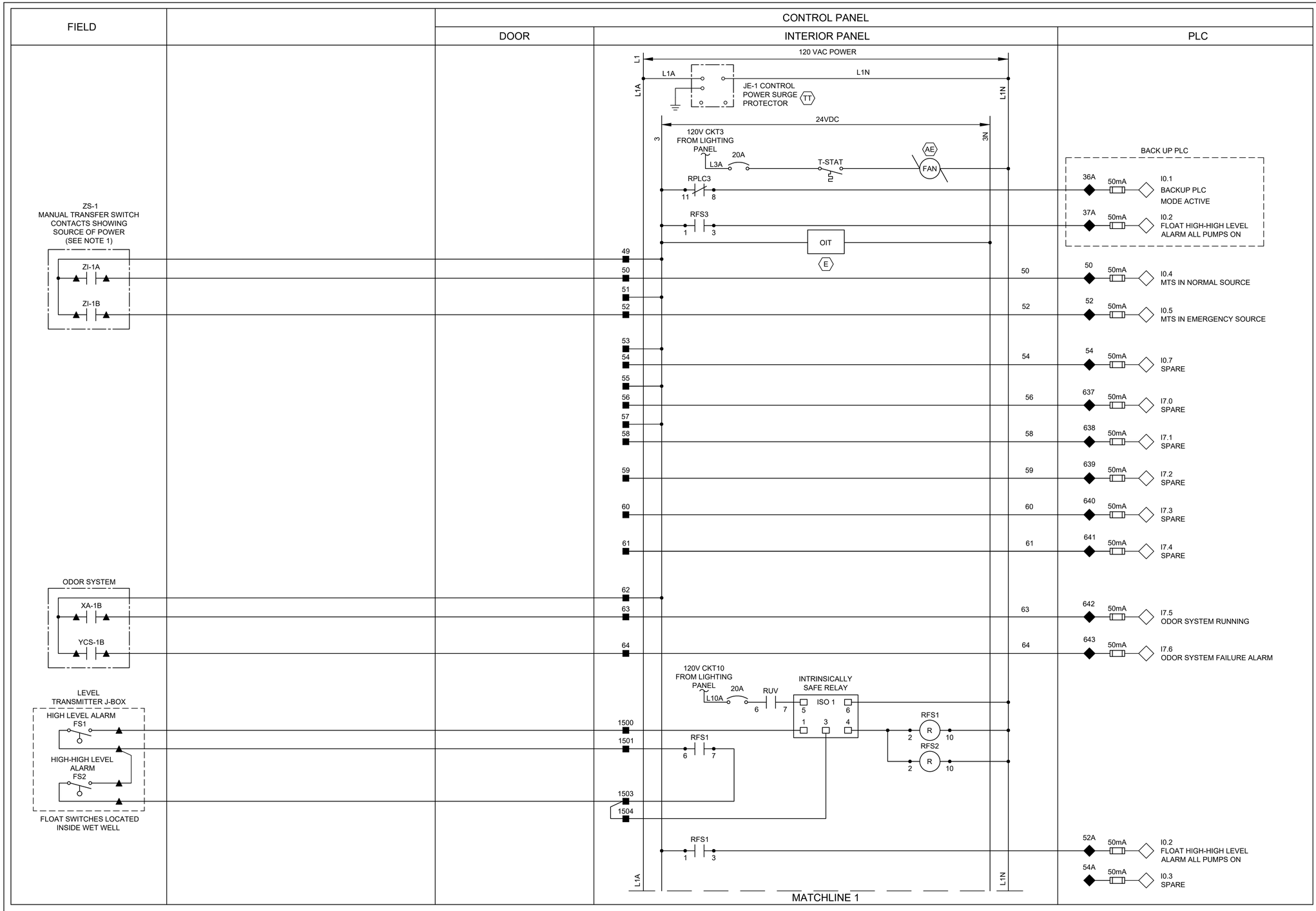

LEGEND

- △ DEVICE OR FIELD TERMINAL LOCATED AT MOTOR
- ✳ DEVICE OR FIELD TERMINAL LOCATED REMOTE
- □ DEVICE OR FIELD TERMINAL LOCATED AT MCC/POWER PANEL
- ■ FIELD TERMINAL LOCATED AT CONTROL PANEL
- ▲ REMOTE TERMINAL
- ● DEVICE TERMINAL NO.
- ◆ PLC INTERFACE TERMINAL

NOTES:

1. PROVIDE AUTO TRANSFER SWITCH DRY CONTACT.
2. ALL FLOAT CONTROL CIRCUIT WIRES COLOR SHALL BE YELLOW.

NO.	DATE	REVISION	APP.

NOTICE:
FOR YOUR SAFETY, YOU ARE REQUIRED BY TEXAS LAW TO CALL 811 AT LEAST 48 HOURS BEFORE YOU DIG SO THAT UNDERGROUND LINES CAN BE MARKED. THIS SIGNATURE DOES NOT FULFILL YOUR OBLIGATION TO CALL 811

VERIFICATION OF PRIVATE UTILITY LINES

Date

CenterPoint Energy natural gas utilities shown. (Gas service lines are not shown). This signature not be used for conflict verification.

Signature valid for six months.

Date

CenterPoint Energy/UNDERGROUND Electrical Facilities Verification ONLY. (This signature verifies existing underground facilities – not to be used for conflict verification)

Signature valid for six months.

Date

Approved for AT&T underground conduit facilities only.
Signature valid for one year.

PAPE–DAWSON
2107 CITYWEST BLVD, 3RD FLR I HOUSTON, TX 77042 I 713.428.2400
TEXAS ENGINEERING FIRM #470 I TEXAS SURVEYING FIRM #10028800

GAI
Gupta & Associates, Inc.
CONSULTING ENGINEERING
Registration No. F-2593
302 Dennis St.
Houston, Texas 77006
Tel: 713-636-2936
Fax: 713-636-2987
email: hforouzan@gaiconsulting.com

SURVEYED BY:
PAPE–DAWSON ENGINEERS
FB NO. 24–018

THIS DOCUMENT IS RELEASED FOR INTERIM REVIEW UNDER THE AUTHORIZATION OF HOSS FOROUZAN, P.E. (#77748) AND IS **NOT TO BE USED FOR CONSTRUCTION.**

CITY OF HOUSTON
HOUSTON PUBLIC WORKS

LIFT STATION REHABILITATION AND RECONSTRUCTION
BEN'S BRANCH, WOODLAND RIDGE, ELMWOOD HILLS, FOREST SHORES, TRAIL RIVER, RIVERLAWN

INSTRUMENTATION

TRAIL RIVER LIFT STATION CONTROL PANEL CONTROL WIRING DIAGRAM–I

WBS NUMBER	FOR CITY OF HOUSTON USE ONLY
R–000267–0180–3	
DRAWING SCALE	
AS NOTED	
CITY OF HOUSTON PM	
BRENDA JOHNSON P.E.	
SHEET NO. XX OF XX	

TR–I–07

FILE PATH: O:\H8107_Lift Station Rehabilitation And Reconstruction (Pape Dawson)\6 Drawings\Instrumentation And Control\Working\Trail River\H8107_TR-I-07.dwg

FIELD | MOTOR CONTROL CENTER (INDOOR) | CONTROL PANEL: DOOR | INTERIOR PANEL | PLC

MATCHLINE 1

120 VAC POWER

24VDC

L1A 3 — 3N — L1N

CHEMICAL FEED SYSTEM

XA-1A
YCS-1A
XA-1B
YCS-1B

62
63
64
65
65

63 — 644 50mA — I7.7 CHEMICAL FEED PUMP NO. 1 FAILURE
64 — 645 50mA — I8.0 CHEMICAL FEED PUMP NO. 1 RUNNING
63 — 646 50mA — I8.1 CHEMICAL FEED PUMP NO. 2 FAILURE
66 — 647 50mA — I8.2 CHEMICAL FEED PUMP NO. 2 RUNNING

BACK UP PLC

L+ — CPU POWER
M — CPU COMMON

RBRM1: 5 — 2 R 10
RBRM2: 6 — 2 R 10
RBRM3: 7 — 2 R 10

35B 1A — QO.0 PUMP NO.1 CALL TO RUN
38B 1A — QO.1 PUMP NO.2 CALL TO RUN
44B 1A — QO.2 PUMP NO.3 CALL TO RUN
44B 1A — QO.3 SPARE
47B 1A — QO.4 SPARE

1004

ANALOG ISOLATOR (C): 1, 2, +, -, 3, 4, 5, 6

13B 50mA — AIO.0 PRIMARY WET WELL LEVEL TRANSMITTER
13AB
13GB

1
24-
1002

ANALOG ISOLATOR (C): 1, 2, +, -, 3, 4, 5, 6

L+ — CPU POWER
M — CPU COMMON

14B 50mA — AIO.2 BACKUP WET WELL LEVEL TRANSMITTER
14AB
14GB

24V-

2

ANALOG ISOLATOR (C): 1, 2, +, -, 3, 4, 5, 6

L+ — CPU POWER
M — CPU COMMON

13 50mA — AIO.0 PRIMARY WET WELL LEVEL TRANSMITTER
13A
13G

14 50mA — AIO.2 BACKUP WET WELL LEVEL TRANSMITTER
14A
14G

RADAR LEVEL TRANSMITTER JUNCTION BOX

MFG. CABLE
PRIMARY RADAR LEVEL TRANSMITTER
LT-1

MFG. CABLE
BACKUP RADAR LEVEL TRANSMITTER
LT-2

11 — 11
1001 — 1001
1001A — 1001A
12 — 12
1003 — 1003
1003A — 1003A

ANALOG I/O SURGE SUPPRESSOR (CC): 1, 2, 3, 4, 1, 2, 3, 4

1 — 24V+
2 — 1001B
3 — 24V+
4 — 1003B

L1A 3 — 3N — L1N

MATCHLINE 2

LEGEND

- △ DEVICE OR FIELD TERMINAL LOCATED AT MOTOR
- ✳ DEVICE OR FIELD TERMINAL LOCATED REMOTE
- □ DEVICE OR FIELD TERMINAL LOCATED AT MCC/POWER PANEL
- ■ FIELD TERMINAL LOCATED AT CONTROL PANEL
- ▲ REMOTE TERMINAL
- ● DEVICE TERMINAL NO.
- ◆ PLC INTERFACE TERMINAL

NO.	DATE	REVISION	APP.

NOTICE:
FOR YOUR SAFETY, YOU ARE REQUIRED BY TEXAS LAW TO CALL 811 AT LEAST 48 HOURS BEFORE YOU DIG SO THAT UNDERGROUND LINES CAN BE MARKED. THIS SIGNATURE DOES NOT FULFILL YOUR OBLIGATION TO CALL 811

VERIFICATION OF PRIVATE UTILITY LINES

Date

CenterPoint Energy natural gas utilities shown. (Gas service lines are not shown). This signature not be used for conflict verification.

Signature valid for six months.

Date

CenterPoint Energy/UNDERGROUND Electrical Facilities Verification ONLY. (This signature verifies existing underground facilities – not to be used for conflict verification)

Signature valid for six months.

Date

Approved for AT&T underground conduit facilities only.
Signature valid for one year.

PAPE–DAWSON
2107 CITYWEST BLVD, 3RD FLR I HOUSTON, TX 77042 I 713.428.2400
TEXAS ENGINEERING FIRM #470 I TEXAS SURVEYING FIRM #10028800

GAI
Gupta & Associates, Inc.
CONSULTING ENGINEERING
Registration No. F-2593
302 Dennis St.
Houston, Texas 77006
Tel: 713-636-2936
Fax: 713-636-2987
email: hforouzan@gaiconsulting.com

SURVEYED BY:
PAPE–DAWSON ENGINEERS
FB NO. 24–018

THIS DOCUMENT IS RELEASED FOR INTERIM REVIEW UNDER THE AUTHORIZATION OF HOSS FOROUZAN, P.E. (#77748) AND IS **NOT TO BE USED FOR CONSTRUCTION.**

CITY OF HOUSTON
HOUSTON PUBLIC WORKS

LIFT STATION REHABILITATION AND RECONSTRUCTION
BEN'S BRANCH, WOODLAND RIDGE, ELMWOOD HILLS, FOREST SHORES, TRAIL RIVER, RIVERLAWN

INSTRUMENTATION

TRAIL RIVER LIFT STATION CONTROL PANEL CONTROL WIRING DIAGRAM–II

WBS NUMBER	FOR CITY OF HOUSTON USE ONLY
R–000267–0180–3	
DRAWING SCALE	
AS NOTED	
CITY OF HOUSTON PM	
BRENDA JOHNSON P.E.	
SHEET NO. XX OF XX	

TR–I–08

FILE PATH: O:\H8107_Lift Station Rehabilitation And Reconstruction (Pape Dawson)\6 Drawings\Instrumentation And Control\Working\Trail River\H8107_TR–I–08.dwg

FILE PATH: O:\H8107_Lift Station Rehabilitation And Reconstruction (Pape Dawson)\6 Drawings\Instrumentation And Control\Working\Trail River\H8107_TR-I-09.dwg

FIELD | MOTOR CONTROL CENTER | CONTROL PANEL: DOOR | CONTROL PANEL: INTERIOR PANEL | CONTROL PANEL: PLC

MATCHLINE 2

120 VAC POWER

24VDC

L1A

24+

24-

L1N

CHEMICAL RADAR LEVEL TRANSMITTER JUNCTION BOX

MFG. CABLE

CHEMICAL THANK RADAR LEVEL TRANSMITTER

LT-3

13

1004

1004A

ANALOG I/O SURGE SUPPRESSOR

24V+

1004B

24V+

M1 M2

9

10

19

20

RFLP

L1

N

MS

MOTION SWITCH

L1

N

MS

MOTION SWITCH

34

34

RUV

RPLC1

RPLC2

RPLC3

ØA ØB ØC

JE-2 PHASE MONITOR

7 8 9 10 11 12

N/C

YI-1 PRIMARY PLC

YI-2 BACKUP PLC

RPLC3

YI-2 BUILDING EXTERIOR ALARM LIGHT

RUV

MATCHLINE 3

1M			DI COMMON
2M			AI COMMON
1L			DO POWER
3			DO POWER
15	50mA	+	AI0.4 CHEMICAL TANK LEVEL TRANSMITTER
15A		-	
15G			
16	50mA	+	AI0.6 SPARE
16A		-	
16G			
30	1A		Q0.0 SPARE
32	50mA		I0.0 PLC INTRUSION ALARM
34	50mA		I0.1 PHASE FAILURE UNDER VOLTAGE
37	50mA		I0.3 SPARE
38	50mA		Q0.1 PLC MODE ACTIVE
41	50mA		I0.2 SPARE
BACK UP PLC			
33B	50mA		Q0.6 SPARE
45	50mA		Q0.2 HIGH LEVEL ALARM
BACK UP PLC			
18B	50mA		I0.0 PHASE FAILURE UNDER VOLTAGE

LEGEND

- △ DEVICE OR FIELD TERMINAL LOCATED AT MOTOR
- ✳ DEVICE OR FIELD TERMINAL LOCATED REMOTE
- □ DEVICE OR FIELD TERMINAL LOCATED AT MCC/POWER PANEL
- ■ FIELD TERMINAL LOCATED AT CONTROL PANEL
- ▲ REMOTE TERMINAL
- ● DEVICE TERMINAL NO.
- ◆ PLC INTERFACE TERMINAL

NO.	DATE	REVISION	APP.

NOTICE:
FOR YOUR SAFETY, YOU ARE REQUIRED BY TEXAS LAW TO CALL 811 AT LEAST 48 HOURS BEFORE YOU DIG SO THAT UNDERGROUND LINES CAN BE MARKED. THIS SIGNATURE DOES NOT FULFILL YOUR OBLIGATION TO CALL 811

VERIFICATION OF PRIVATE UTILITY LINES

Date

CenterPoint Energy natural gas utilities shown. (Gas service lines are not shown). This signature not be used for conflict verification.

Signature valid for six months.

Date

CenterPoint Energy/UNDERGROUND Electrical Facilities Verification ONLY. (This signature verifies existing underground facilities – not to be used for conflict verification)

Signature valid for six months.

Date

Approved for AT&T underground conduit facilities only.
Signature valid for one year.

PAPE–DAWSON
2107 CITYWEST BLVD, 3RD FLR I HOUSTON, TX 77042 I 713.428.2400
TEXAS ENGINEERING FIRM #470 I TEXAS SURVEYING FIRM #10028800

GAI
Gupta & Associates, Inc.
CONSULTING ENGINEERING
Registration No. F-2593
302 Dennis St.
Houston, Texas 77006
Tel: 713-636-2936
Fax: 713-636-2987
email: hforouzan@gaiconsulting.com

SURVEYED BY:
PAPE–DAWSON ENGINEERS
FB NO. 24–018

THIS DOCUMENT IS RELEASED FOR INTERIM REVIEW UNDER THE AUTHORIZATION OF HOSS FOROUZAN, P.E. (#77748) AND IS **NOT TO BE USED FOR CONSTRUCTION.**

CITY OF HOUSTON
HOUSTON PUBLIC WORKS

LIFT STATION REHABILITATION AND RECONSTRUCTION
BEN'S BRANCH, WOODLAND RIDGE, ELMWOOD HILLS, FOREST SHORES, TRAIL RIVER, RIVERLAWN

INSTRUMENTATION

TRAIL RIVER LIFT STATION CONTROL PANEL CONTROL WIRING DIAGRAM–III

WBS NUMBER	FOR CITY OF HOUSTON USE ONLY
R–000267–0180–3	
DRAWING SCALE	
AS NOTED	
CITY OF HOUSTON PM	
BRENDA JOHNSON P.E.	
SHEET NO. XX OF XX	

TR–I–09

FILE PATH: O:\H8107_Lift Station Rehabilitation And Reconstruction (Pape Dawson)\6 Drawings\Instrumentation And Control\Working\Trail River\H8107_TR-I-10.dwg

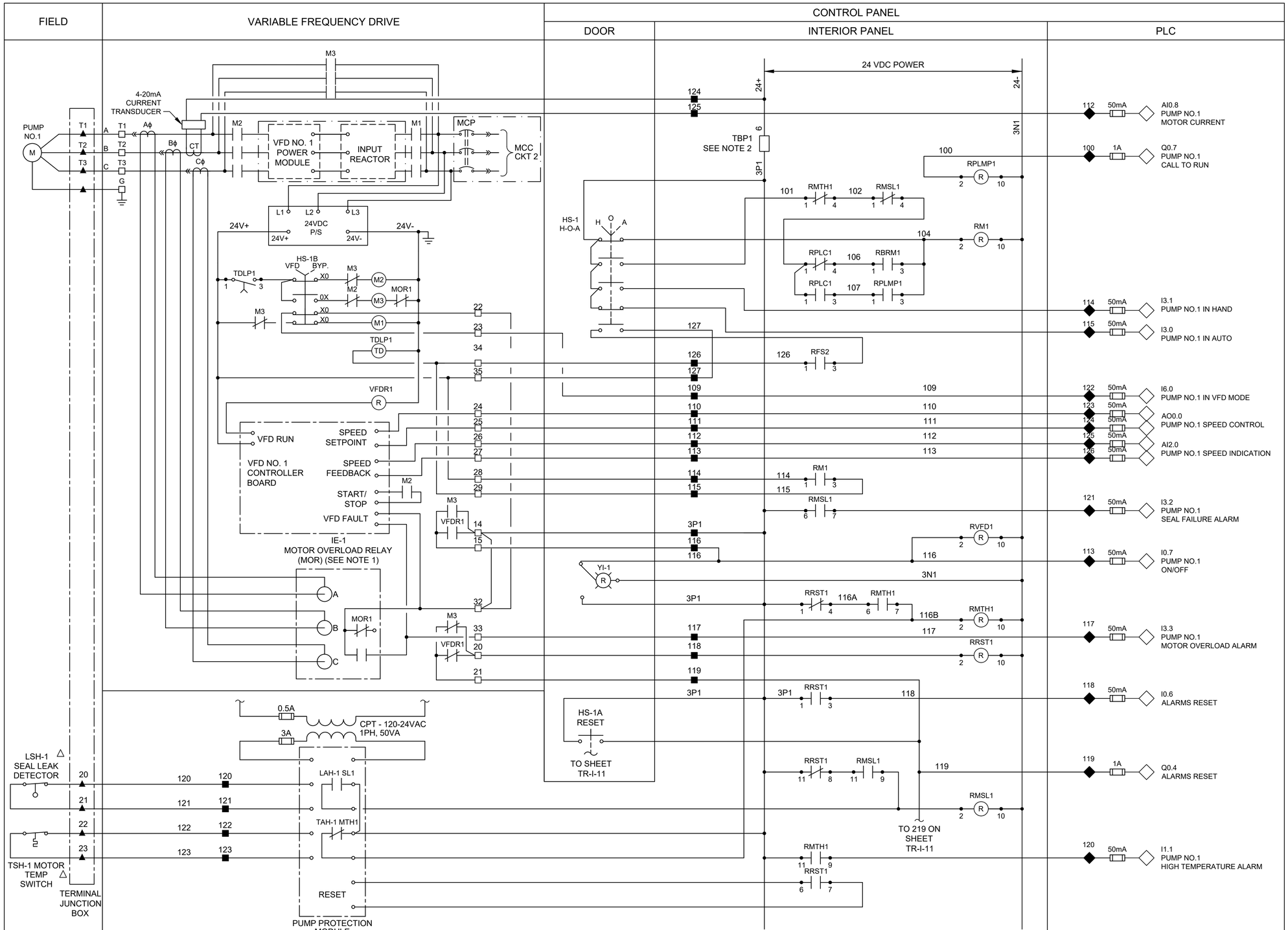

LEGEND

- △ DEVICE OR FIELD TERMINAL LOCATED AT MOTOR
- ✳ DEVICE OR FIELD TERMINAL LOCATED REMOTE
- □ DEVICE OR FIELD TERMINAL LOCATED AT MCC/POWER PANEL
- ■ FIELD TERMINAL LOCATED AT CONTROL PANEL
- ▲ REMOTE TERMINAL
- ● DEVICE TERMINAL NO.
- ◆ PLC INTERFACE TERMINAL

NOTES:

1. MOTOR OVERLOAD RELAY OUTPUT CONTACT SHOWN NORMALLY CLOSED WHEN RELAY IS DE-ENERGIZED, OPEN WHEN ENERGIZED, AND CLOSED WHEN IN ALARM. VERIFY OPERATION OF RELAY PROVIDED AND ADJUST CONNECTION OF RMOR AUXILIARY RELAYS.
2. FUSED TERMINAL ON TERMINAL BLOCK TB4 SEE CONTROL POWER AND COMMUNICATION WIRING DIAGRAM DRAWING NO. TR-I-03.
3. ALL FLOAT CONTROL CIRCUIT WIRES COLOR SHALL BE YELLOW.

NO.	DATE	REVISION	APP.

NOTICE:
FOR YOUR SAFETY, YOU ARE REQUIRED BY TEXAS LAW TO CALL 811 AT LEAST 48 HOURS BEFORE YOU DIG SO THAT UNDERGROUND LINES CAN BE MARKED. THIS SIGNATURE DOES NOT FULFILL YOUR OBLIGATION TO CALL 811

VERIFICATION OF PRIVATE UTILITY LINES

Date

CenterPoint Energy natural gas utilities shown. (Gas service lines are not shown). This signature not be used for conflict verification.

Signature valid for six months.

Date

CenterPoint Energy/UNDERGROUND Electrical Facilities Verification ONLY. (This signature verifies existing underground facilities – not to be used for conflict verification)

Signature valid for six months.

Date

Approved for AT&T underground conduit facilities only.
Signature valid for one year.

PAPE–DAWSON
2107 CITYWEST BLVD, 3RD FLR I HOUSTON, TX 77042 I 713.428.2400
TEXAS ENGINEERING FIRM #470 I TEXAS SURVEYING FIRM #10028800

GAI
Gupta & Associates, Inc.
CONSULTING ENGINEERING
Registration No. F-2593
302 Dennis St.
Houston, Texas 77006
Tel: 713-636-2936
Fax: 713-636-2987
email: hforouzan@gaiconsulting.com

SURVEYED BY:
PAPE–DAWSON ENGINEERS
FB NO. 24–018

THIS DOCUMENT IS RELEASED FOR INTERIM REVIEW UNDER THE AUTHORIZATION OF HOSS FOROUZAN, P.E. (#77748) AND IS **NOT TO BE USED FOR CONSTRUCTION.**

CITY OF HOUSTON
HOUSTON PUBLIC WORKS

LIFT STATION REHABILITATION AND RECONSTRUCTION
BEN'S BRANCH, WOODLAND RIDGE, ELMWOOD HILLS, FOREST SHORES, TRAIL RIVER, RIVERLAWN

INSTRUMENTATION

TRAIL RIVER LIFT STATION PUMP NO.1 CONTROL WIRING DIAGRAM

WBS NUMBER	FOR CITY OF HOUSTON USE ONLY
R–000267–0180–3	
DRAWING SCALE	
AS NOTED	
CITY OF HOUSTON PM	
BRENDA JOHNSON P.E.	
SHEET NO. XX OF XX	

TR–I–10

FILE PATH: O:\H8107_Lift Station Rehabilitation And Reconstruction (Pape Dawson)\6 Drawings\Instrumentation And Control\Working\Trail River\H8107_TR-I-11.dwg

FIELD | VARIABLE FREQUENCY DRIVE | CONTROL PANEL: DOOR | INTERIOR PANEL | PLC

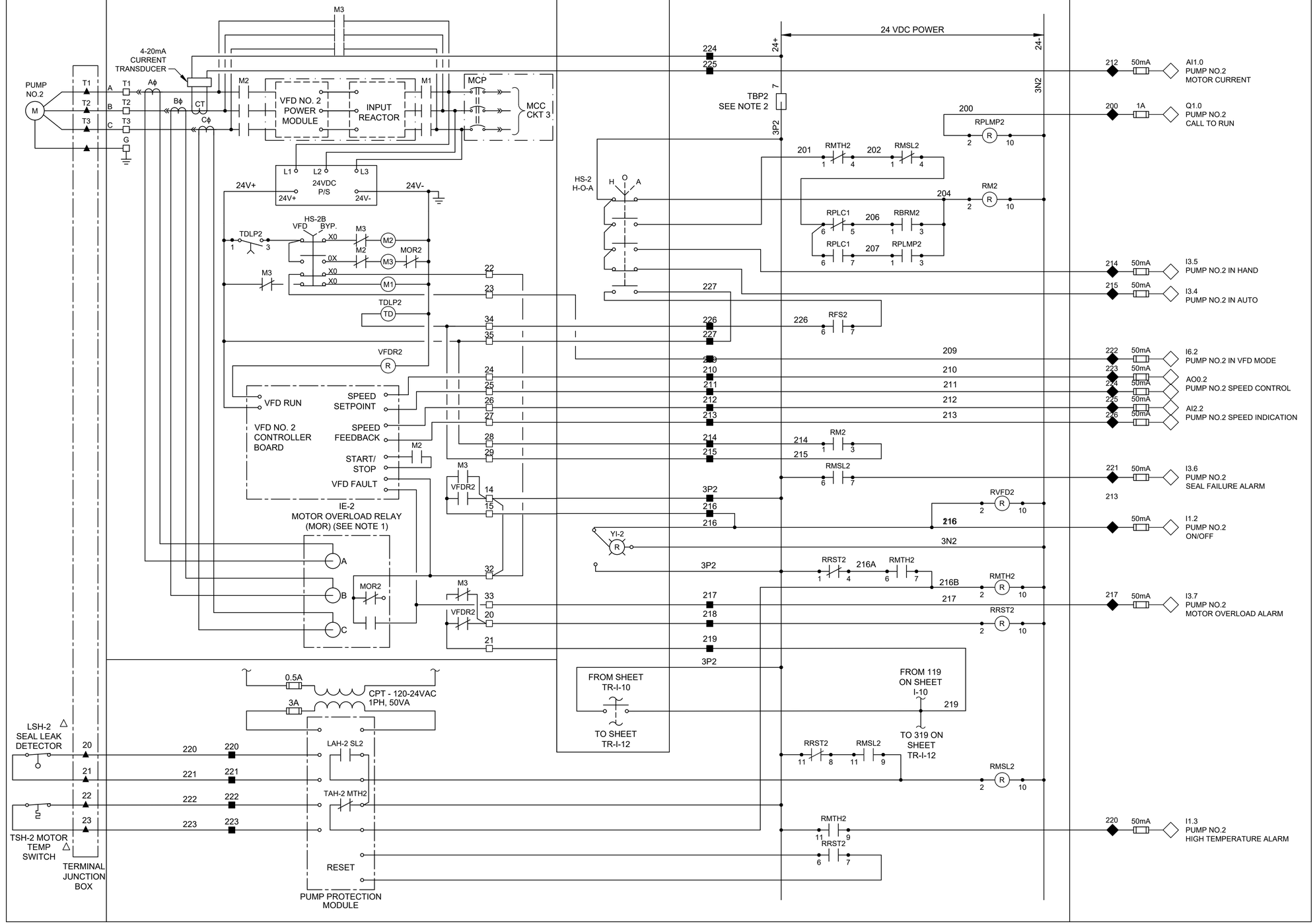

LEGEND

- △ DEVICE OR FIELD TERMINAL LOCATED AT MOTOR
- ✳ DEVICE OR FIELD TERMINAL LOCATED REMOTE
- □ DEVICE OR FIELD TERMINAL LOCATED AT MCC/POWER PANEL
- ■ FIELD TERMINAL LOCATED AT CONTROL PANEL
- ▲ REMOTE TERMINAL
- ● DEVICE TERMINAL NO.
- ◆ PLC INTERFACE TERMINAL

NOTES:

1. MOTOR OVERLOAD RELAY OUTPUT CONTACT SHOWN NORMALLY CLOSED WHEN RELAY IS DE-ENERGIZED, OPEN WHEN ENERGIZED, AND CLOSED WHEN IN ALARM. VERIFY OPERATION OF RELAY PROVIDED AND ADJUST CONNECTION OF RMOR AUXILIARY RELAYS.
2. FUSED TERMINAL ON TERMINAL BLOCK TB4 SEE CONTROL POWER AND COMMUNICATION WIRING DIAGRAM DRAWING NO. TR-I-03.
3. ALL FLOAT CONTROL CIRCUIT WIRES COLOR SHALL BE YELLOW.

NO.	DATE	REVISION	APP.

NOTICE:
FOR YOUR SAFETY, YOU ARE REQUIRED BY TEXAS LAW TO CALL 811 AT LEAST 48 HOURS BEFORE YOU DIG SO THAT UNDERGROUND LINES CAN BE MARKED. THIS SIGNATURE DOES NOT FULFILL YOUR OBLIGATION TO CALL 811

VERIFICATION OF PRIVATE UTILITY LINES

Date

CenterPoint Energy natural gas utilities shown. (Gas service lines are not shown). This signature not be used for conflict verification.

Signature valid for six months.

Date

CenterPoint Energy/UNDERGROUND Electrical Facilities Verification ONLY. (This signature verifies existing underground facilities – not to be used for conflict verification)

Signature valid for six months.

Date

Approved for AT&T underground conduit facilities only.
Signature valid for one year.

PAPE–DAWSON
2107 CITYWEST BLVD, 3RD FLR I HOUSTON, TX 77042 I 713.428.2400
TEXAS ENGINEERING FIRM #470 I TEXAS SURVEYING FIRM #10028800

GAI
Gupta & Associates, Inc.
CONSULTING ENGINEERING
Registration No. F-2593
302 Dennis St.
Houston, Texas 77006
Tel: 713-636-2936
Fax: 713-636-2987
email: hforouzan@gaiconsulting.com

SURVEYED BY:
PAPE–DAWSON ENGINEERS
FB NO. 24–018

THIS DOCUMENT IS RELEASED FOR INTERIM REVIEW UNDER THE AUTHORIZATION OF HOSS FOROUZAN, P.E. (#77748) AND IS **NOT TO BE USED FOR CONSTRUCTION.**

CITY OF HOUSTON
HOUSTON PUBLIC WORKS

LIFT STATION REHABILITATION AND RECONSTRUCTION
BEN'S BRANCH, WOODLAND RIDGE, ELMWOOD HILLS, FOREST SHORES, TRAIL RIVER, RIVERLAWN

INSTRUMENTATION

TRAIL RIVER LIFT STATION PUMP NO.2 CONTROL WIRING DIAGRAM

WBS NUMBER	FOR CITY OF HOUSTON USE ONLY
R–000267–0180–3	
DRAWING SCALE	
AS NOTED	
CITY OF HOUSTON PM	
BRENDA JOHNSON P.E.	
SHEET NO. XX OF XX	

TR–I–11

FILE PATH: O:\H8107_Lift Station Rehabilitation And Reconstruction (Pape Dawson)\6 Drawings\Instrumentation And Control\Working\Trail River\H8107_TR-I-12.dwg

FIELD | VARIABLE FREQUENCY DRIVE | CONTROL PANEL: DOOR | INTERIOR PANEL | PLC

PUMP NO.3
T1 A
T2 B
T3 C
G
M

4-20mA CURRENT TRANSDUCER
Aϕ Bϕ Cϕ CT
M1 M2 M3
MCP
MCC CKT 4
VFD NO. 3 POWER MODULE
INPUT REACTOR
L1 L2 L3
24VDC P/S
24V+ 24V-

HS-3B VFD BYP.
TDLP3 1 3
M3 X0 M2
M2 0X M3
MOR3
M3 X0 M1
TDLP3 TD
VFDR3 R

VFD RUN
SPEED SETPOINT
SPEED FEEDBACK
START/ STOP
VFD FAULT
VFD NO. 3 CONTROLLER BOARD

IE-3
MOTOR OVERLOAD RELAY
(MOR) (SEE NOTE 1)
A B C MOR3

M3 VFDR3 14 15
M3 VFDR3 33 20 21
32

0.5A 3A
CPT - 120-24VAC 1PH, 50VA

LSH-3 SEAL LEAK DETECTOR
TSH-3 MOTOR TEMP SWITCH
TERMINAL JUNCTION BOX
20 21 22 23
320 321 322 323
LAH-3 SL3
TAH-3 MTH3
RESET
PUMP PROTECTION MODULE

22 23 34 35 24 25 26 27 28 29

24 VDC POWER
24+ 24-
324 325
TBP3 SEE NOTE 2
8 3P3 3N3
HS-3 H-O-A H O A
327 326 309 310 311 312 313 314 315 316 317 318 319 3P3
FROM SHEET TR-I-11
FROM 219 ON SHEET TR-I-11

RPLMP3 300
RMTH3 301
RMSL3 302
RM3 304
RPLMP3 306
RFS2 326
RFLP
RM3 314 315
RMSL3
RVFD3 316
Y1-3
RRST3 316A
RMTH3 316B
RRST3
RRSTL3
RMSL3
RMTH3 RRST3

312	50mA	AI1.2	PUMP NO.3 MOTOR CURRENT
300	1A	Q1.1	PUMP NO.3 CALL TO RUN
314	50mA	I4.0	PUMP NO.3 IN HAND
315	50mA	I4.1	PUMP NO.3 IN AUTO
322	50mA	I6.2	PUMP NO.3 IN VFD MODE
323	50mA	AO0.4	PUMP NO.3 SPEED CONTROL
324	50mA		
325	50mA	AI2.4	PUMP NO.3 SPEED INDICATION
326	50mA		
321	50mA	I4.2	PUMP NO.3 SEAL FAILURE ALARM
313	50mA	I1.4	PUMP NO.3 ON/OFF
317	50mA	I4.3	PUMP NO.3 MOTOR OVERLOAD ALARM
320	50mA	I1.5	PUMP NO.3 HIGH TEMPERATURE ALARM

LEGEND
△ DEVICE OR FIELD TERMINAL LOCATED AT MOTOR
✳ DEVICE OR FIELD TERMINAL LOCATED REMOTE
□ DEVICE OR FIELD TERMINAL LOCATED AT MCC/POWER
■ PANEL FIELD TERMINAL LOCATED AT CONTROL PANEL
▲ REMOTE TERMINAL
● DEVICE TERMINAL NO.
◆ PLC INTERFACE TERMINAL

NOTES:
1. MOTOR OVERLOAD RELAY OUTPUT CONTACT SHOWN NORMALLY CLOSED WHEN RELAY IS DE-ENERGIZED, OPEN WHEN ENERGIZED, AND CLOSED WHEN IN ALARM. VERIFY OPERATION OF RELAY PROVIDED AND ADJUST CONNECTION OF RMOR AUXILIARY RELAYS.
2. FUSED TERMINAL ON TERMINAL BLOCK TB4 SEE CONTROL POWER AND COMMUNICATION WIRING DIAGRAM DRAWING NO. TR-I-03.
3. ALL FLOAT CONTROL CIRCUIT WIRES COLOR SHALL BE YELLOW.

NOTICE:
FOR YOUR SAFETY, YOU ARE REQUIRED BY TEXAS LAW TO CALL 811 AT LEAST 48 HOURS BEFORE YOU DIG SO THAT UNDERGROUND LINES CAN BE MARKED. THIS SIGNATURE DOES NOT FULFILL YOUR OBLIGATION TO CALL 811

VERIFICATION OF PRIVATE UTILITY LINES

Date

CenterPoint Energy natural gas utilities shown. (Gas service lines are not shown). This signature not be used for conflict verification.

Signature valid for six months.

Date

CenterPoint Energy/UNDERGROUND Electrical Facilities Verification ONLY. (This signature verifies existing underground facilities – not to be used for conflict verification)

Signature valid for six months.

Date

Approved for AT&T underground conduit facilities only.
Signature valid for one year.

PAPE-DAWSON
2107 CITYWEST BLVD, 3RD FLR I HOUSTON, TX 77042 I 713.428.2400
TEXAS ENGINEERING FIRM #470 I TEXAS SURVEYING FIRM #10028800

GAI
Gupta & Associates, Inc.
CONSULTING ENGINEERING
Registration No. F-2593
302 Dennis St.
Houston, Texas 77006
Tel: 713-636-2936
Fax: 713-636-2987
email: hforouzan@gaiconsulting.com

SURVEYED BY:
PAPE-DAWSON ENGINEERS
FB NO. 24-018

THIS DOCUMENT IS RELEASED FOR INTERIM REVIEW UNDER THE AUTHORIZATION OF HOSS FOROUZAN, P.E. (#77748) AND IS **NOT TO BE USED FOR CONSTRUCTION.**

CITY OF HOUSTON
HOUSTON PUBLIC WORKS

LIFT STATION REHABILITATION AND RECONSTRUCTION
BEN'S BRANCH, WOODLAND RIDGE, ELMWOOD HILLS, FOREST SHORES, TRAIL RIVER, RIVERLAWN

INSTRUMENTATION

TRAIL RIVER LIFT STATION PUMP NO.3 CONTROL WIRING DIAGRAM

WBS NUMBER	FOR CITY OF HOUSTON USE ONLY
R-000267-0180-3	
DRAWING SCALE	
AS NOTED	
CITY OF HOUSTON PM	
BRENDA JOHNSON P.E.	
SHEET NO. XX OF XX	

TR-I-12

NO.	DATE	REVISION	APP.

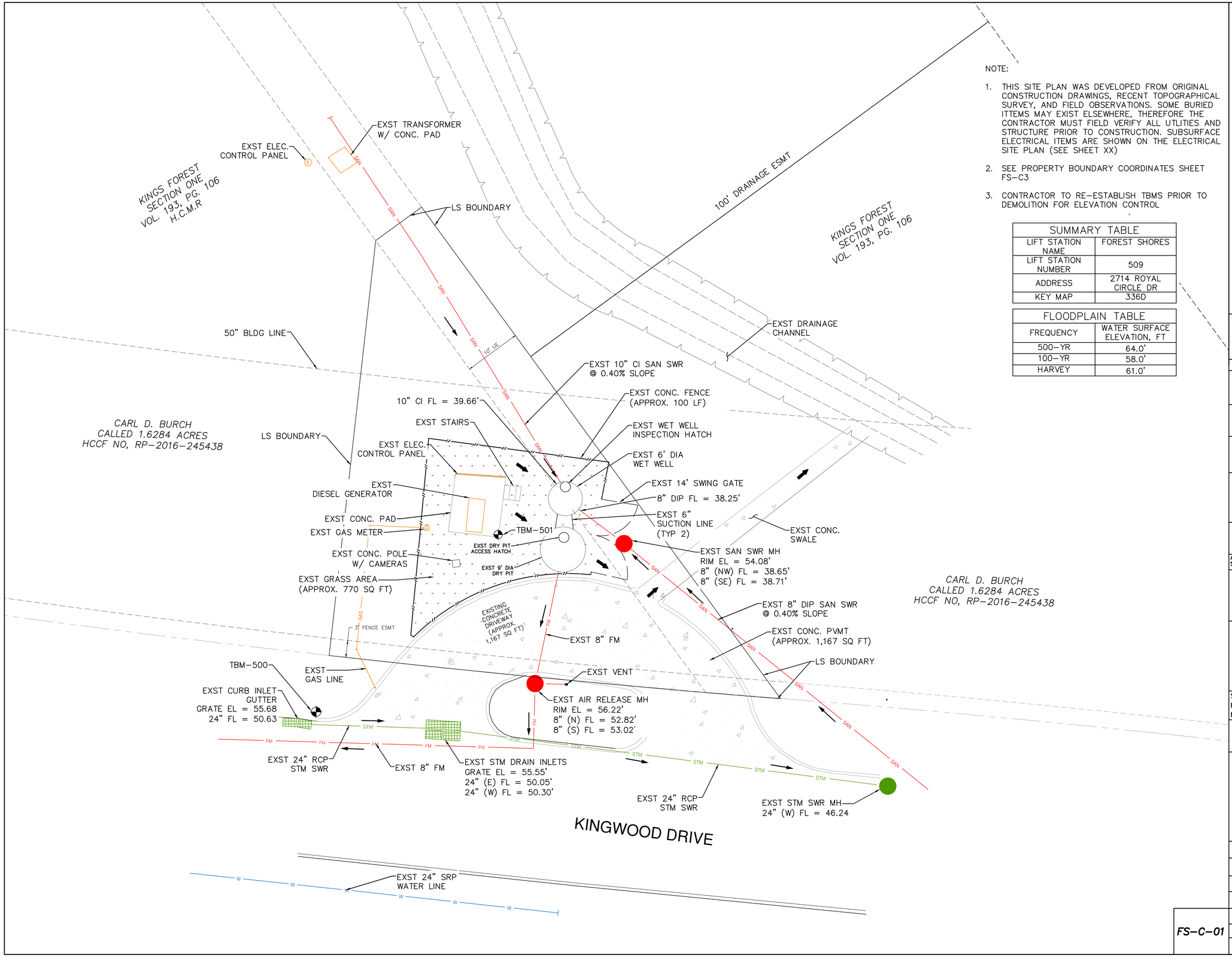

NOTE:

1. THIS SITE PLAN WAS DEVELOPED FROM ORIGINAL CONSTRUCTION DRAWINGS, RECENT TOPOGRAPHICAL SURVEY, AND FIELD OBSERVATIONS. SOME BURIED ITTEMS MAY EXIST ELSEWHERE, THEREFORE THE CONTRACTOR MUST FIELD VERIFY ALL UTLITIES AND STRUCTURE PRIOR TO CONSTRUCTION. SUBSURFACE ELECTRICAL ITEMS ARE SHOWN ON THE ELECTRICAL SITE PLAN (SEE SHEET XX)
2. SEE PROPERTY BOUNDARY COORDINATES SHEET FS-C3
3. CONTRACTOR TO RE-ESTABLISH TBMS PRIOR TO DEMOLITION FOR ELEVATION CONTROL

SUMMARY TABLE	
LIFT STATION NAME	FOREST SHORES
LIFT STATION NUMBER	509
ADDRESS	2714 ROYAL CIRCLE DR
KEY MAP	336D

FLOODPLAIN TABLE	
FREQUENCY	WATER SURFACE ELEVATION, FT
500-YR	64.0'
100-YR	58.0'
HARVEY	61.0'

TEMPORARY BENCHMARK DESCRIPTION

TBM-500 CUT "X" IN CURB INLET - ELEVATION 56.44'
TBM-501 CUT "X" IN CONCRETE PAD - ELEVATION 55.02'

LEGEND

- DRAINAGE DIRECTION
- FLOW DIRECTION
- EXISTING PAVEMENT
- EXISTING GRASS AREA

SCALE: 1"= 8'
0' 8' 16' 24'

NO.	DATE	REVISION	APP.

NOTICE:
FOR YOUR SAFETY, YOU ARE REQUIRED BY TEXAS LAW TO CALL 811 AT LEAST 48 HOURS BEFORE YOU DIG SO THAT UNDERGROUND LINES CAN BE MARKED. THIS SIGNATURE DOES NOT FULFILL YOUR OBLIGATION TO CALL 811

VERIFICATION OF PRIVATE UTILITY LINES

Date

CenterPoint Energy natural gas utilities shown. (Gas service lines are not shown). This signature not be used for conflict verification.

Signature valid for six months.

Date

CenterPoint Energy/UNDERGROUND Electrical Facilities Verification ONLY. (This signature verifies existing underground facilities - not to be used for conflict verification)

Signature valid for six months.

Date

Approved for AT&T underground conduit facilities only.
Signature valid for one year.

PAPE-DAWSON
2107 CITYWEST BLVD, 3RD FLR I HOUSTON, TX 77042 I 713.428.2400
TEXAS ENGINEERING FIRM #470 I TEXAS SURVEYING FIRM #10028800

PAPE-DAWSON
2107 CITYWEST BOULEVARD
3RD FLR
HOUSTON, TEXAS 77402
713-428-2400
TX FIRM #470

SURVEYED BY:
PAPE-DAWSON
FB NO. 24-018

THIS DOCUMENT IS RELEASED FOR INTERIM REVIEW UNDER THE AUTHORIZATION OF AMIRHOSSEIN SHOKOUHI, P.E. (#139835) AND IS **NOT TO BE USED FOR CONSTRUCTION.**

CITY OF HOUSTON
HOUSTON PUBLIC WORKS

LIFT STATION REHABILITATION AND RECONSTRUCTION
BEN'S BRANCH, WOODLAND RIDGE, ELMWOOD HILLS, FOREST SHORES, TRAIL RIVER, RIVERLAWN

CIVIL

FOREST SHORES LIFT STATION EXISTING SITE PLAN & YARD PIPING

WBS NUMBER	FOR CITY OF HOUSTON USE ONLY
R-000267-0180-3	
DRAWING SCALE	
AS NOTED	
CITY OF HOUSTON PM	
BRENDA JOHNSON P.E.	
SHEET NO. 247 OF 338	

FS-C-01

FILE PATH: K:\Projects\423\77 COH LS Package\00\03 CADD\Plans\Sheets\07 Forest Shores\FS Existing Yard Piping.dwg

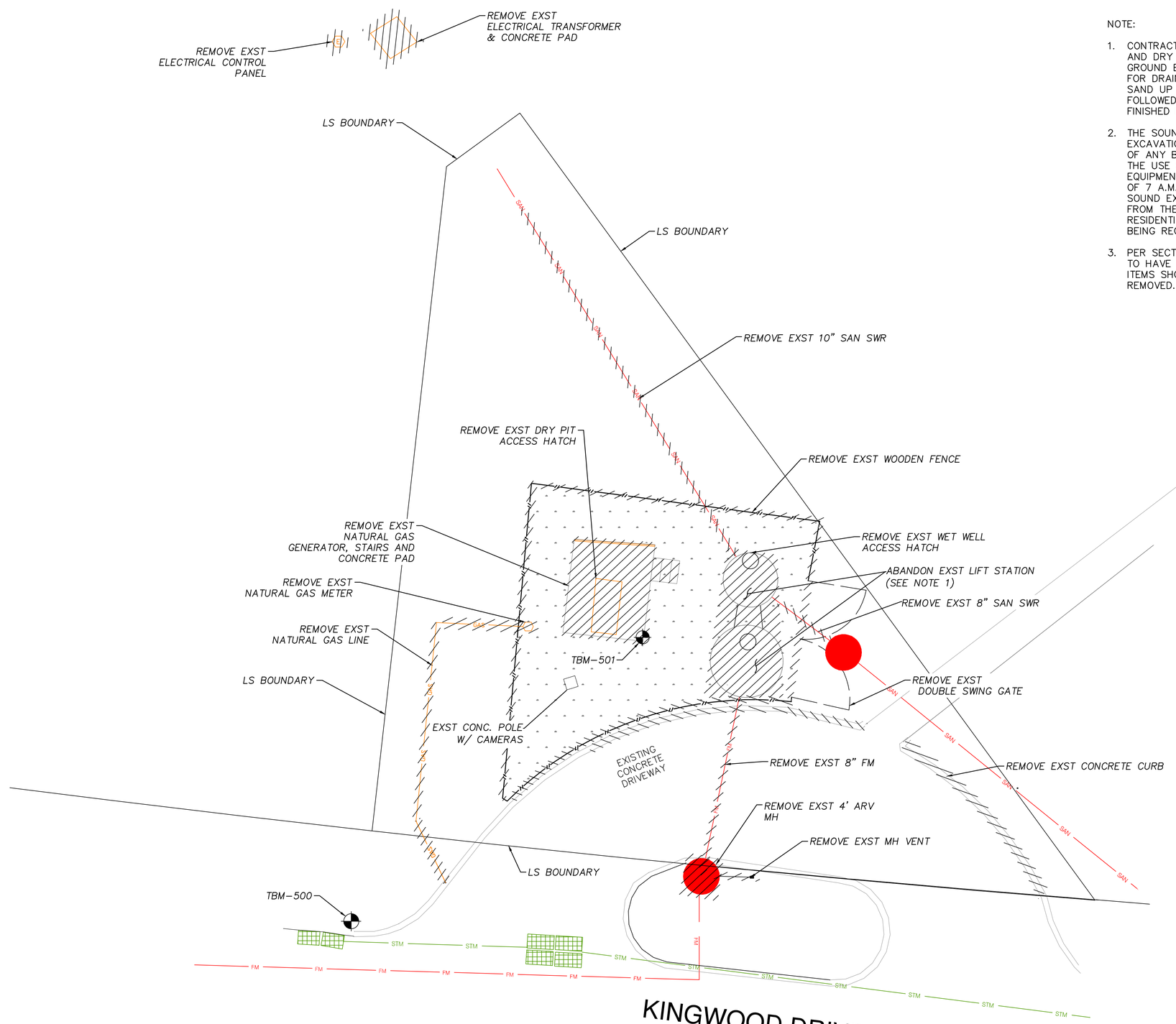

NOTE:

1. CONTRACTOR TO REMOVE THE EXST WET WELL AND DRY PIT UP TO 8' BELOW NATURAL GROUND ELEVATION, DRILL HOLES IN BOTTOM FOR DRAINAGE, BACK FILL WITH CLEAN BANK SAND UP TO 3' BELOW NATURAL GROUND FOLLOWED WITH TOP SOIL TO PROPOSED FINISHED FLOOR ELEVATION.
2. THE SOUND PRODUCED BY THE ERECTION, EXCAVATION, CONSTRUCTION, OR DEMOLITION OF ANY BUILDING OR STRUCTURE, INCLUDING THE USE OF ANY NECESSARY TOOLS OR EQUIPMENT, CONDUCTED BETWEEN THE HOURS OF 7 A.M. AND 8 P.M. SHALL NOT PRODUCE A SOUND EXCEEDING 85 DB(A) WHEN MEASURED FROM THE PROPERTY LINE OF THE RESIDENTIAL PROPERTY WHERE THE SOUND IS BEING RECEIVED.
3. PER SECTION 01145S, THE CITY OF HOUSTON TO HAVE REFUSAL RIGHTS TO RETAIN ALL ITEMS SHOWN TO BE DEMOLISHED AND/OR REMOVED.

TEMPORARY BENCHMARK DESCRIPTION

TBM-500 CUT "X" IN CURB INLET – ELEVATION 56.44'
TBM-501 CUT "X" IN CONCRETE PAD – ELEVATION 55.02'

LEGEND

TO BE REMOVED

NO.	DATE	REVISION	APP.

SCALE: 1"= 6'

0' 6' 12' 18'

NOTICE:
FOR YOUR SAFETY, YOU ARE REQUIRED BY TEXAS LAW TO CALL 811 AT LEAST 48 HOURS BEFORE YOU DIG SO THAT UNDERGROUND LINES CAN BE MARKED. THIS SIGNATURE DOES NOT FULFILL YOUR OBLIGATION TO CALL 811

VERIFICATION OF PRIVATE UTILITY LINES

Date

CenterPoint Energy natural gas utilities shown. (Gas service lines are not shown). This signature not be used for conflict verification.

Signature valid for six months.

Date

CenterPoint Energy/UNDERGROUND Electrical Facilities Verification ONLY. (This signature verifies existing underground facilities – not to be used for conflict verification)

Signature valid for six months.

Date

Approved for AT&T underground conduit facilities only.
Signature valid for one year.

PAPE-DAWSON
2107 CITYWEST BLVD, 3RD FLR I HOUSTON, TX 77042 I 713.428.2400
TEXAS ENGINEERING FIRM #470 I TEXAS SURVEYING FIRM #10028800

PAPE-DAWSON
2107 CITYWEST BOULEVARD
3RD FLR
HOUSTON, TEXAS 77402
713-428-2400
TX FIRM #470

THIS DOCUMENT IS RELEASED FOR INTERIM REVIEW UNDER THE AUTHORIZATION OF AMIRHOSSEIN SHOKOUHI, P.E. (#139835) AND IS **NOT TO BE USED FOR CONSTRUCTION.**

SURVEYED BY:
PAPE-DAWSON
FB NO. 24-018

CITY OF HOUSTON
HOUSTON PUBLIC WORKS

LIFT STATION REHABILITATION AND RECONSTRUCTION
BEN'S BRANCH, WOODLAND RIDGE, ELMWOOD HILLS, FOREST SHORES, TRAIL RIVER, RIVERLAWN

CIVIL

FOREST SHORES LIFT STATION DEMOLITION PLAN

WBS NUMBER	FOR CITY OF HOUSTON USE ONLY
R-000267-0180-3	
DRAWING SCALE	
AS NOTED	
CITY OF HOUSTON PM	
BRENDA JOHNSON P.E.	
SHEET NO. 248 OF 338	

FS-C-02

FILE PATH: K:\Projects\423\77 COH LS Package\00\03 CADD\Plans\Sheets\07 Forest Shores\FS DEMO SITE PLAN.dwg

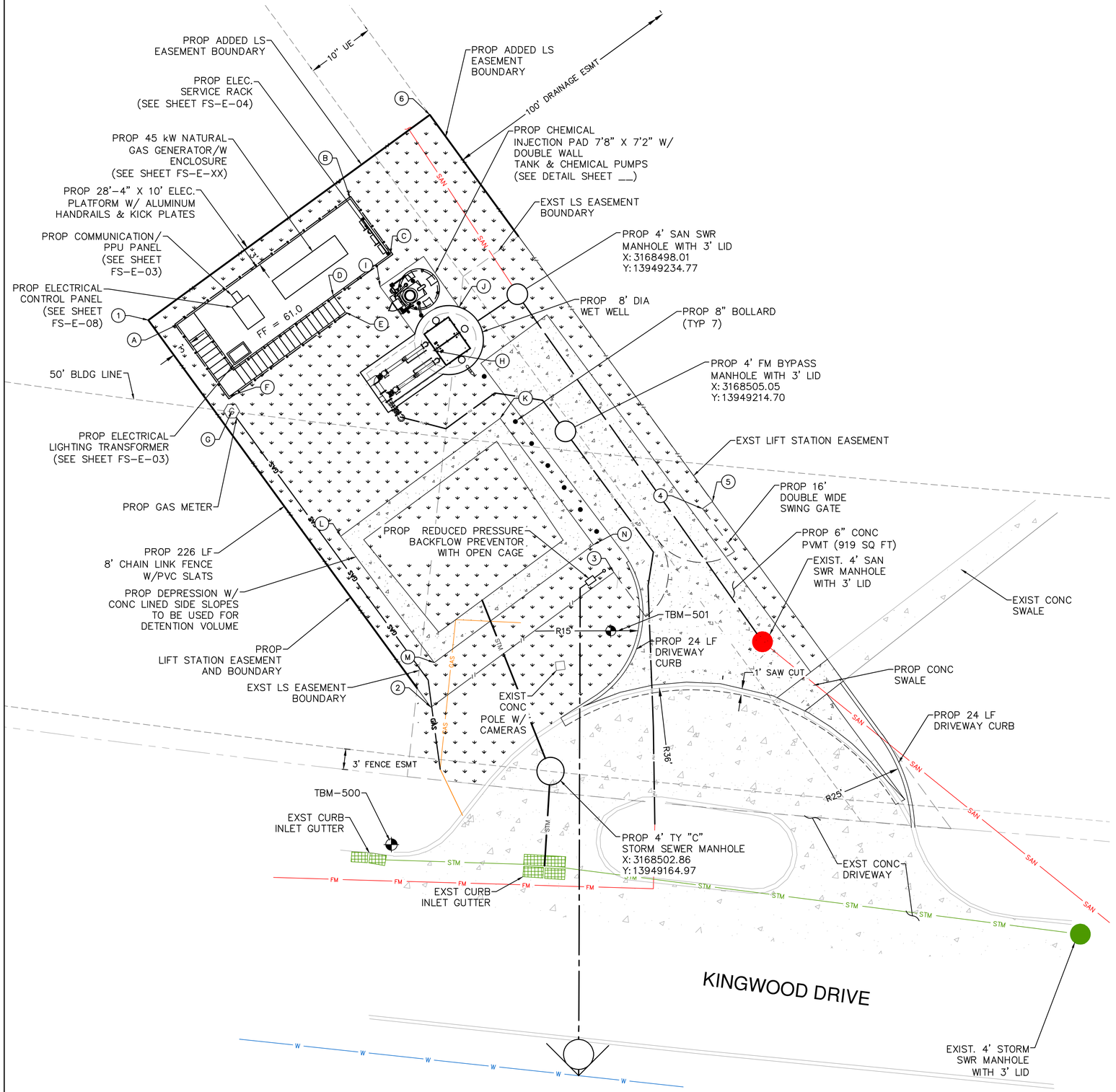

PROPERTY COORDINATION				
POINT #	PROPOSED ELEVATIONS	EXIST ELEVATION	NORTHING	EASTING
1	50.72	50.72	13949230.99	3168444.03
2	0.00	0.00	13949174.33	3168485.39
3	53.76	53.76	13949194.10	3168512.15
4	52.79	52.79	13949203.39	3168525.14
5	52.64	52.64	13949204.46	3168526.60
6	51.90	51.90	13949261.06	3168485.22

STRUCTURE COORDINATION				
POINT #	PROPOSED ELEVATIONS	EXIST ELEVATION	NORTHING	EASTING
A	50.62	50.62	13949230.39	3168448.33
B	52.02	52.02	13949248.75	3168473.57
C	52.45	52.45	13949240.66	3168479.45
D	51.30	51.30	13949234.59	3168471.09
E	51.40	51.40	13949232.16	3168472.85
F	50.40	50.40	13949219.82	3168455.86
G	50.39	50.39	13949217.67	3168456.22
H	54.05	54.05	13949226.55	3168485.67
I	52.62	52.62	13949235.90	3168477.95
J	52.74	52.74	13949232.89	3168489.48
K	52.70	52.70	13949216.61	3168495.50
L	52.70	52.70	13949199.37	3168472.19
M	53.30	53.30	13949180.88	3168485.86
N	53.30	53.30	13949198.12	3168509.18

NOTE:

1. THE ELEVATED ELECTRICAL/GENERATOR TO BE INSTALLED AT ELEVATION OF 67.0' (13.0 FT HIGHER THAN GROUND ELEVATION OF 54.0').
2. CONTRACTOR SHALL BE RESPONSIBLE FOR REPAIRING AND REPAVING ANY PORTION OF CONC ACCESS ROAD AND PAVING.
3. CONTRACTOR TO TAP A 3/4" WATER LINE TO THE EXST 24" SRP POTABLE WATER LINE LOCATED AT THE ROW AND CONNECTED TO THE PROP BACKFLOW PREVENTOR. (SEE SHEET GC-04 FOR DETAIL)
4. PROP FM BYPASS MH AND STM SWR MH RIM ELEVATIONS AT GRADE. PROP SAN SWR MH RIM ELEVATION 6" HIGHER THAN GROUND ELEVATION.
5. PROP GENERATOR WILL BE USED FOR EMERGENCY AND TESTING ONLY. NOISE AND SOUND REGULATIONS IN CODE COMPLIANCE CHAPTER 30 NOT APPLICABLE
6. CONTRACTOR TO LOCATE THE EXST GAS LINE BURIED ELEVATION AND CONNECT TO THE PROP 2" GAS LINE.
7. THE PROP 2" NATURAL GAS LINE TO BE INSTALLED 3' BELOW NATURAL GROUND ELEVATION.

TEMPORARY BENCHMARK DESCRIPTION

TBM-500 CUT "X" IN CURB INLET – ELEVATION 56.44'
TBM-501 CUT "X" IN CONCRETE PAD – ELEVATION 55.02'

LEGEND

EXISTING PAVEMENT

EXISTING GRASS AREA

PROPOSED PAVEMENT

PROPOSED GRASS AREA

SCALE: 1"= 8'

0' 8' 16' 24'

NO.	DATE	REVISION	APP.

NOTICE:

FOR YOUR SAFETY, YOU ARE REQUIRED BY TEXAS LAW TO CALL 811 AT LEAST 48 HOURS BEFORE YOU DIG SO THAT UNDERGROUND LINES CAN BE MARKED. THIS SIGNATURE DOES NOT FULFILL YOUR OBLIGATION TO CALL 811

VERIFICATION OF PRIVATE UTILITY LINES

Date

CenterPoint Energy natural gas utilities shown. (Gas service lines are not shown). This signature not be used for conflict verification.

Signature valid for six months.

Date

CenterPoint Energy/UNDERGROUND Electrical Facilities Verification ONLY. (This signature verifies existing underground facilities – not to be used for conflict verification)

Signature valid for six months.

Date

Approved for AT&T underground conduit facilities only.
Signature valid for one year.

PAPE-DAWSON
2107 CITYWEST BLVD, 3RD FLR I HOUSTON, TX 77042 I 713.428.2400
TEXAS ENGINEERING FIRM #470 I TEXAS SURVEYING FIRM #10028800

PAPE-DAWSON
2107 CITYWEST BOULEVARD
3RD FLR
HOUSTON, TEXAS 77402
713-428-2400
TX FIRM #470

SURVEYED BY:
PAPE-DAWSON
FB NO. 24-018

THIS DOCUMENT IS RELEASED FOR INTERIM REVIEW UNDER THE AUTHORIZATION OF AMIRHOSSEIN SHOKOUHI, P.E. (#139835) AND IS **NOT TO BE USED FOR CONSTRUCTION.**

CITY OF HOUSTON

HOUSTON PUBLIC WORKS

LIFT STATION REHABILITATION AND RECONSTRUCTION
BEN'S BRANCH, WOODLAND RIDGE, ELMWOOD HILLS, FOREST SHORES, TRAIL RIVER, RIVERLAWN

CIVIL

FOREST SHORES LIFT STATION PROPOSED SITE PLAN

WBS NUMBER	FOR CITY OF HOUSTON USE ONLY
R-000267-0180-3	
DRAWING SCALE	
AS NOTED	
CITY OF HOUSTON PM	
BRENDA JOHNSON P.E.	
SHEET NO. 249 OF 338	

FS-C-03

FILE PATH: K:\Projects\423\77 COH LS Package\00\03 CADD\Plans\Sheets\07 Forest Shores\LAYOUT-C-4237700.dwg

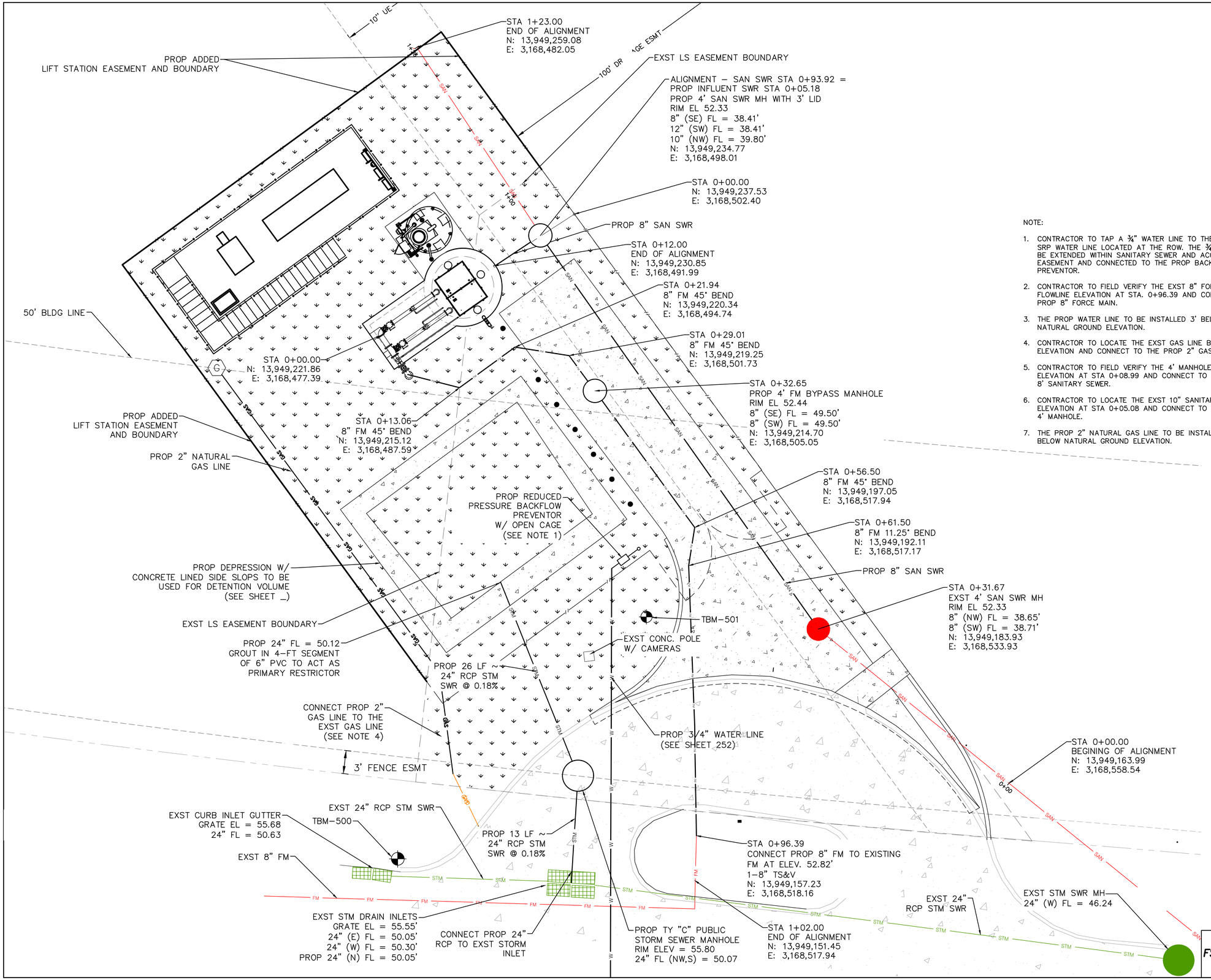

FILE PATH: K:\Projects\423\77 COH LS Package\00\03 CADD\Plans\Sheets\07 Forest Shores\FS YARD PIPING PLAN.dwg

TEMPORARY BENCHMARK DESCRIPTION

TBM–500 CUT "X" IN CURB INLET – ELEVATION 56.44'
TBM–501 CUT "X" IN CONCRETE PAD – ELEVATION 55.02'

LEGEND

- PROPOSED PAVEMENT
- EXISTING PAVEMENT
- PROPOSED GRASS AREA

NO.	DATE	REVISION	APP.

SCALE: 1"= 6'

0' 6' 12' 18'

NOTE:

1. CONTRACTOR TO TAP A ¾" WATER LINE TO THE EXST 24" SRP WATER LINE LOCATED AT THE ROW. THE ¾" LINE TO BE EXTENDED WITHIN SANITARY SEWER AND ACCESS EASEMENT AND CONNECTED TO THE PROP BACKFLOW PREVENTOR.
2. CONTRACTOR TO FIELD VERIFY THE EXST 8" FORCE MAIN FLOWLINE ELEVATION AT STA. 0+96.39 AND CONNECT THE PROP 8" FORCE MAIN.
3. THE PROP WATER LINE TO BE INSTALLED 3' BELOW NATURAL GROUND ELEVATION.
4. CONTRACTOR TO LOCATE THE EXST GAS LINE BURIED ELEVATION AND CONNECT TO THE PROP 2" GAS LINE.
5. CONTRACTOR TO FIELD VERIFY THE 4' MANHOLE INVERT ELEVATION AT STA 0+08.99 AND CONNECT TO THE PROP 8' SANITARY SEWER.
6. CONTRACTOR TO LOCATE THE EXST 10" SANITARY SEWER ELEVATION AT STA 0+05.08 AND CONNECT TO THE PROP 4' MANHOLE.
7. THE PROP 2" NATURAL GAS LINE TO BE INSTALLED 3' BELOW NATURAL GROUND ELEVATION.

NOTICE:

FOR YOUR SAFETY, YOU ARE REQUIRED BY TEXAS LAW TO CALL 811 AT LEAST 48 HOURS BEFORE YOU DIG SO THAT UNDERGROUND LINES CAN BE MARKED. THIS SIGNATURE DOES NOT FULFILL YOUR OBLIGATION TO CALL 811

VERIFICATION OF PRIVATE UTILITY LINES

Date

CenterPoint Energy natural gas utilities shown. (Gas service lines are not shown). This signature not be used for conflict verification.

Signature valid for six months.

Date

CenterPoint Energy/UNDERGROUND Electrical Facilities Verification ONLY. (This signature verifies existing underground facilities – not to be used for conflict verification)

Signature valid for six months.

Date

Approved for AT&T underground conduit facilities only.
Signature valid for one year.

PAPE–DAWSON

2107 CITYWEST BLVD, 3RD FLR I HOUSTON, TX 77042 I 713.428.2400

TEXAS ENGINEERING FIRM #470 I TEXAS SURVEYING FIRM #10028800

PAPE–DAWSON
2107 CITYWEST BOULEVARD
3RD FLR
HOUSTON, TEXAS 77402
713–428–2400
TX FIRM #470

SURVEYED BY:
PAPE–DAWSON
FB NO. 24–018

THIS DOCUMENT IS RELEASED FOR INTERIM REVIEW UNDER THE AUTHORIZATION OF AMIRHOSSEIN SHOKOUHI, P.E. (#139835) AND IS **NOT TO BE USED FOR CONSTRUCTION.**

CITY OF HOUSTON

HOUSTON PUBLIC WORKS

LIFT STATION REHABILITATION AND RECONSTRUCTION
BEN'S BRANCH, WOODLAND RIDGE, ELMWOOD HILLS, FOREST SHORES, TRAIL RIVER, RIVERLAWN

CIVIL

FOREST SHORES LIFT STATION PROPOSED YARD PIPING PLAN

WBS NUMBER	FOR CITY OF HOUSTON USE ONLY
R–000267–0180–3	
DRAWING SCALE	
AS NOTED	
CITY OF HOUSTON PM	
BRENDA JOHNSON P.E.	
SHEET NO. 250 OF 338	

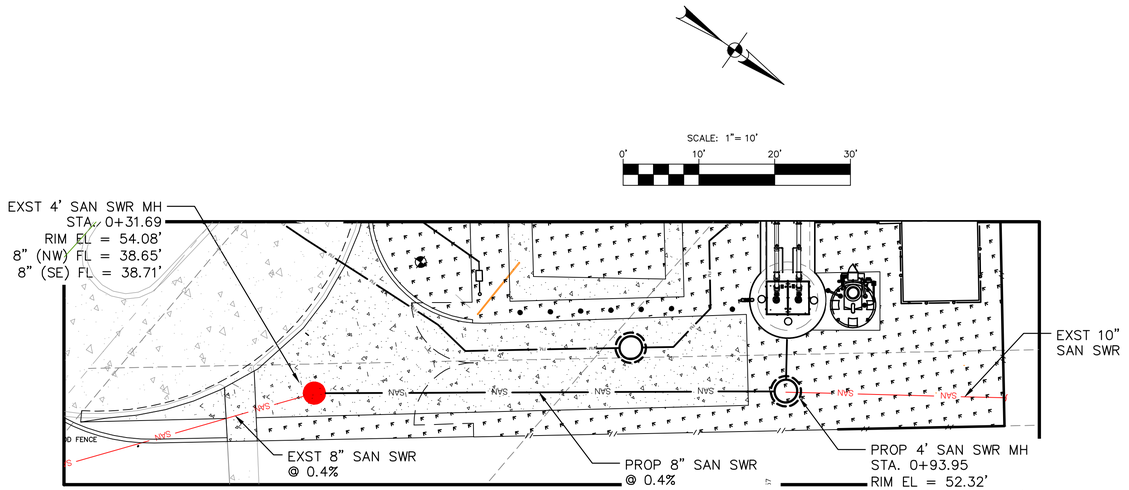

PLAN

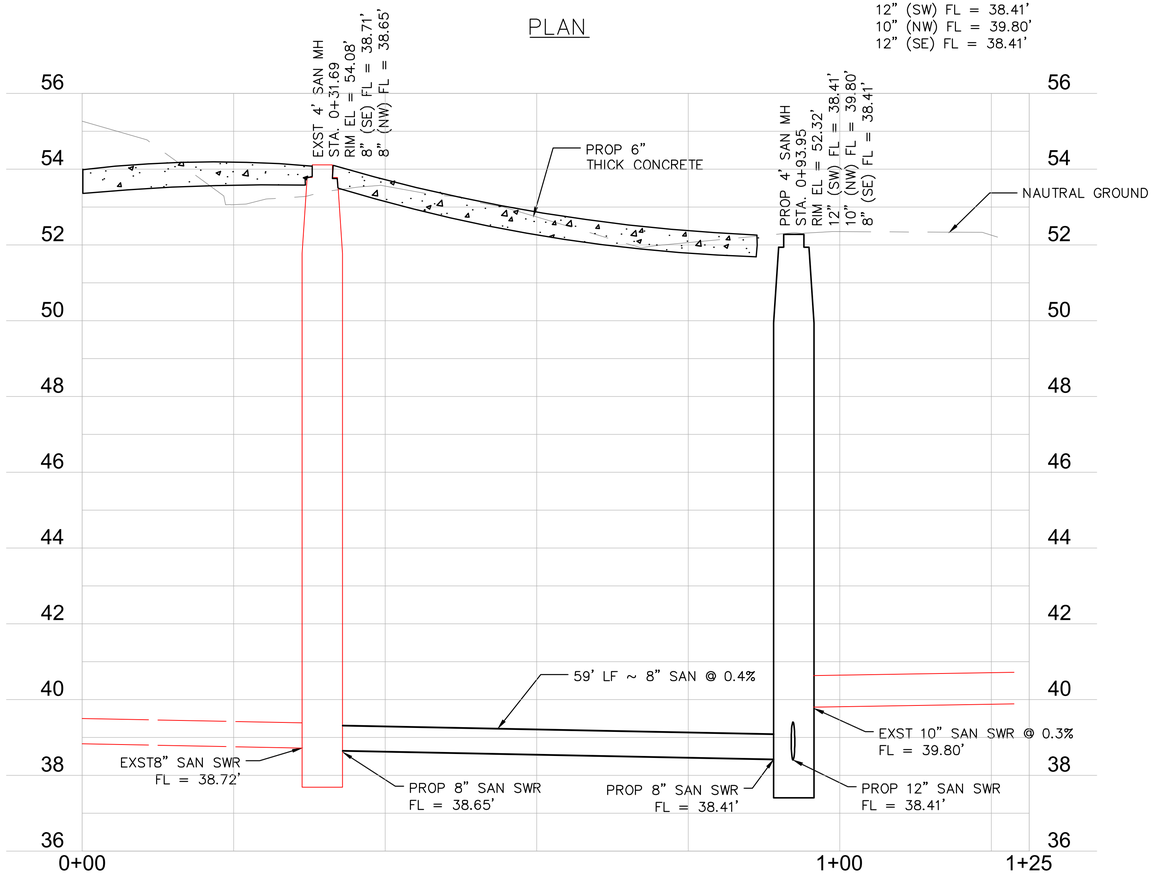

FOREST SHORES PROPOSED SANITARY PROFILE

1"=2'

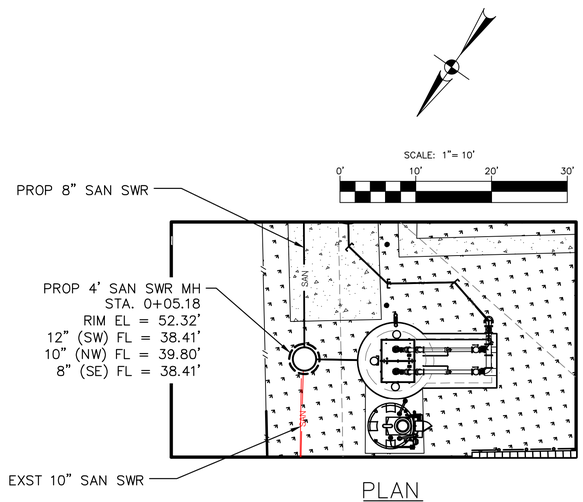

PLAN

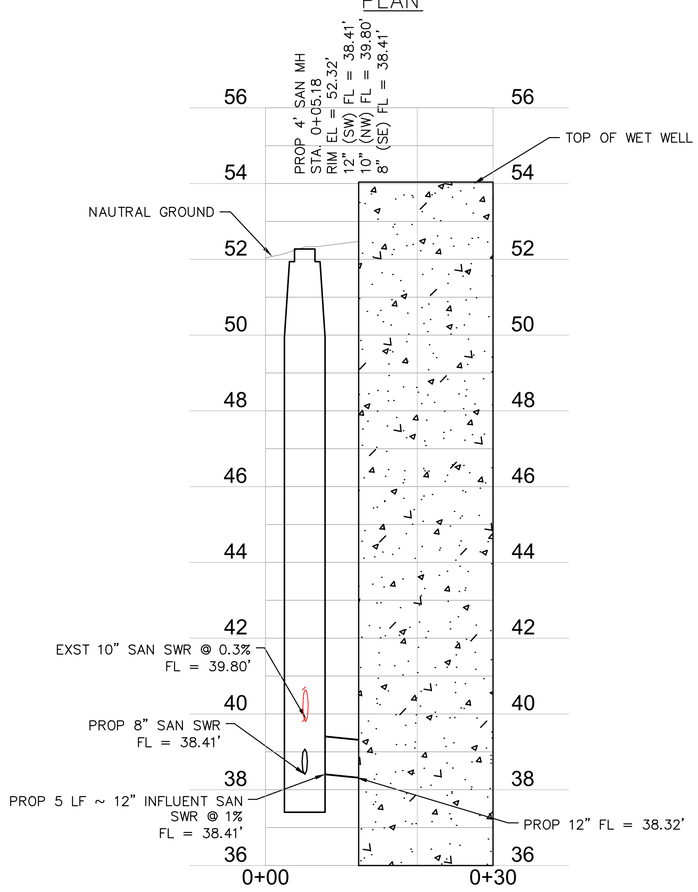

FOREST SHORES
PROPOSED INFLUENT PROFILE

1"=2'

TEMPORARY BENCHMARK DESCRIPTION

TBM-500 CUT "X" IN CURB INLET - ELEVATION 56.44'
TBM-501 CUT "X" IN CONCRETE PAD - ELEVATION 55.02'

LEGEND

- PROPOSED PAVEMENT
- EXISTING PAVEMENT
- PROPOSED GRASS AREA

NO.	DATE	REVISION	APP.

NOTICE:

FOR YOUR SAFETY, YOU ARE REQUIRED BY TEXAS LAW TO CALL 811 AT LEAST 48 HOURS BEFORE YOU DIG SO THAT UNDERGROUND LINES CAN BE MARKED. THIS SIGNATURE DOES NOT FULFILL YOUR OBLIGATION TO CALL 811

VERIFICATION OF PRIVATE UTILITY LINES

Date

CenterPoint Energy natural gas utilities shown. (Gas service lines are not shown). This signature not be used for conflict verification.

Signature valid for six months.

Date

CenterPoint Energy/UNDERGROUND Electrical Facilities Verification ONLY. (This signature verifies existing underground facilities - not to be used for conflict verification)

Signature valid for six months.

Date

Approved for AT&T underground conduit facilities only.
Signature valid for one year.

PAPE-DAWSON

2107 CITYWEST BLVD, 3RD FLR I HOUSTON, TX 77042 I 713.428.2400

TEXAS ENGINEERING FIRM #470 I TEXAS SURVEYING FIRM #10028800

PAPE-DAWSON
2107 CITYWEST BOULEVARD
3RD FLR
HOUSTON, TEXAS 77402
713-428-2400
TX FIRM #470

SURVEYED BY:
PAPE-DAWSON
FB NO. 24-018

THIS DOCUMENT IS RELEASED FOR INTERIM REVIEW UNDER THE AUTHORIZATION OF AMIRHOSSEIN SHOKOUHI, P.E. (#139835) AND IS **NOT TO BE USED FOR CONSTRUCTION.**

CITY OF HOUSTON

HOUSTON PUBLIC WORKS

LIFT STATION REHABILITATION AND RECONSTRUCTION
BEN'S BRANCH, WOODLAND RIDGE, ELMWOOD HILLS, FOREST SHORES, TRAIL RIVER, RIVERLAWN

CIVIL

FOREST SHORES LIFT STATION PROPOSED YARD PIPING PROFILE

WBS NUMBER	FOR CITY OF HOUSTON USE ONLY
R-000267-0180-3	
DRAWING SCALE	
AS NOTED	
CITY OF HOUSTON PM	
BRENDA JOHNSON P.E.	
SHEET NO. 251 OF 338	

FS-C-05

FILE PATH: K:\Projects\423\77 COH LS Package\00\03 CADD\Plans\Sheets\07 Forest Shores\FS SANITARY SWR PROF.dwg

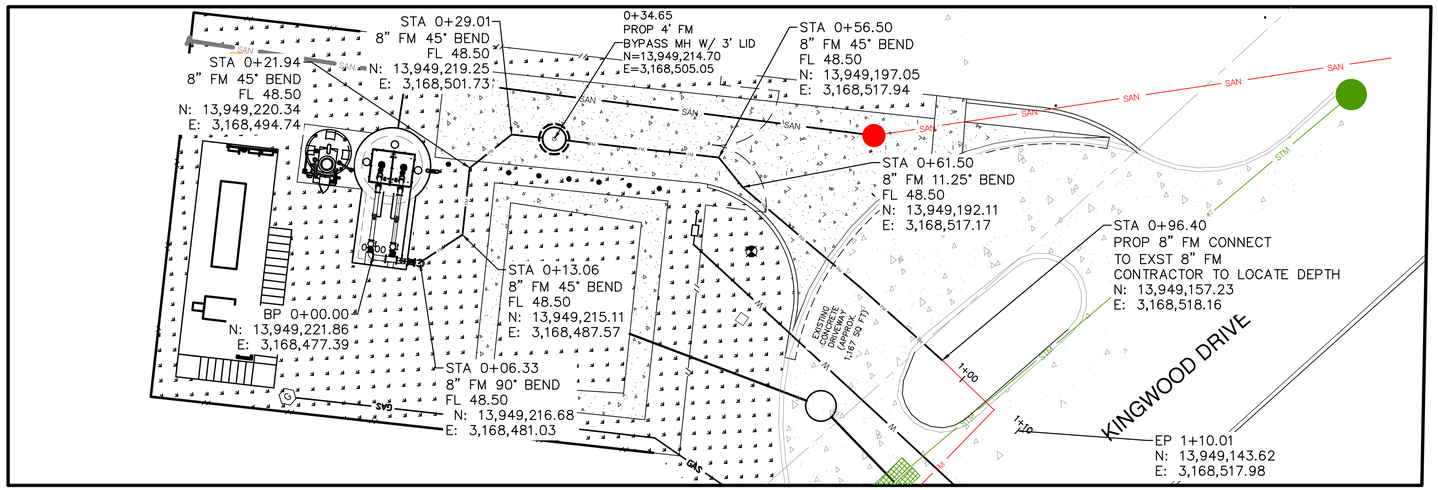

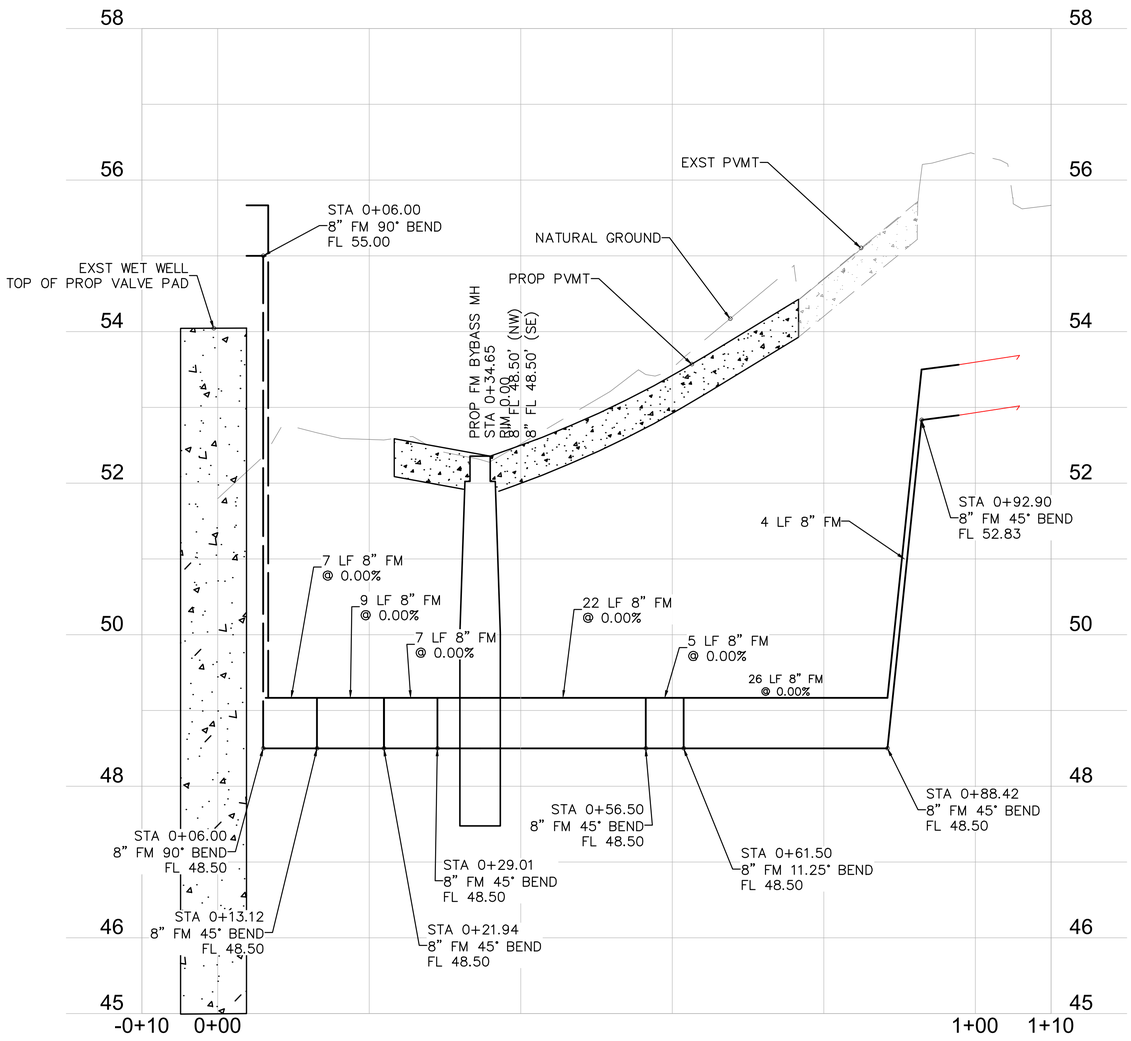

PROP FM
1"=1'

TEMPORARY BENCHMARK DESCRIPTION

TBM-500 CUT "X" IN CURB INLET - ELEVATION 56.44'
TBM-501 CUT "X" IN CONCRETE PAD - ELEVATION 55.02'

LEGEND

PROPOSED PAVEMENT

EXISTING PAVEMENT

PROPOSED GRASS AREA

SCALE: 1"= 10'
0' 10' 20' 30'

NO.	DATE	REVISION	APP.

NOTICE:
FOR YOUR SAFETY, YOU ARE REQUIRED BY TEXAS LAW TO CALL 811 AT LEAST 48 HOURS BEFORE YOU DIG SO THAT UNDERGROUND LINES CAN BE MARKED. THIS SIGNATURE DOES NOT FULFILL YOUR OBLIGATION TO CALL 811

VERIFICATION OF PRIVATE UTILITY LINES

Date

CenterPoint Energy natural gas utilities shown. (Gas service lines are not shown). This signature not be used for conflict verification.

Signature valid for six months.

Date

CenterPoint Energy/UNDERGROUND Electrical Facilities Verification ONLY. (This signature verifies existing underground facilities - not to be used for conflict verification)

Signature valid for six months.

Date

Approved for AT&T underground conduit facilities only.
Signature valid for one year.

PAPE-DAWSON
2107 CITYWEST BLVD, 3RD FLR I HOUSTON, TX 77042 I 713.428.2400
TEXAS ENGINEERING FIRM #470 I TEXAS SURVEYING FIRM #10028800

PAPE-DAWSON
2107 CITYWEST BOULEVARD
3RD FLR
HOUSTON, TEXAS 77402
713-428-2400
TX FIRM #470

SURVEYED BY:
PAPE-DAWSON
FB NO. 24-018

THIS DOCUMENT IS RELEASED FOR INTERIM REVIEW UNDER THE AUTHORIZATION OF AMIRHOSSEIN SHOKOUHI, P.E. (#139835) AND IS **NOT TO BE USED FOR CONSTRUCTION.**

CITY OF HOUSTON
HOUSTON PUBLIC WORKS

LIFT STATION REHABILITATION AND RECONSTRUCTION
BEN'S BRANCH, WOODLAND RIDGE, ELMWOOD HILLS, FOREST SHORES, TRAIL RIVER, RIVERLAWN

CIVIL

FOREST SHORES LIFT STATION PROPOSED FM PLAN & PROFILE

WBS NUMBER	FOR CITY OF HOUSTON USE ONLY
R-000267-0180-3	
DRAWING SCALE	
AS NOTED	
CITY OF HOUSTON PM	
BRENDA JOHNSON P.E.	
SHEET NO.---- OF 338	

FS-C-06

FILE PATH: K:\Projects\423\77 COH LS Package\00\03 CADD\Plans\Sheets\07 Forest Shores\FS FORCE MAIN PLAN AND PROF.dwg

NOTE:

1. THE PROP WATER LINE TO BE INSTALLED 3 FT BELOW NATURAL GROUND ELEVATION.
2. CONTRACTOR TO PROVIDE MIN. 4 FT HORIZONTAL DISTANCE AND 2 FT VERTICAL DISTANCE FROM THE EXST SANITARY AND STORM SEWER AT ALL LOCATIONS.

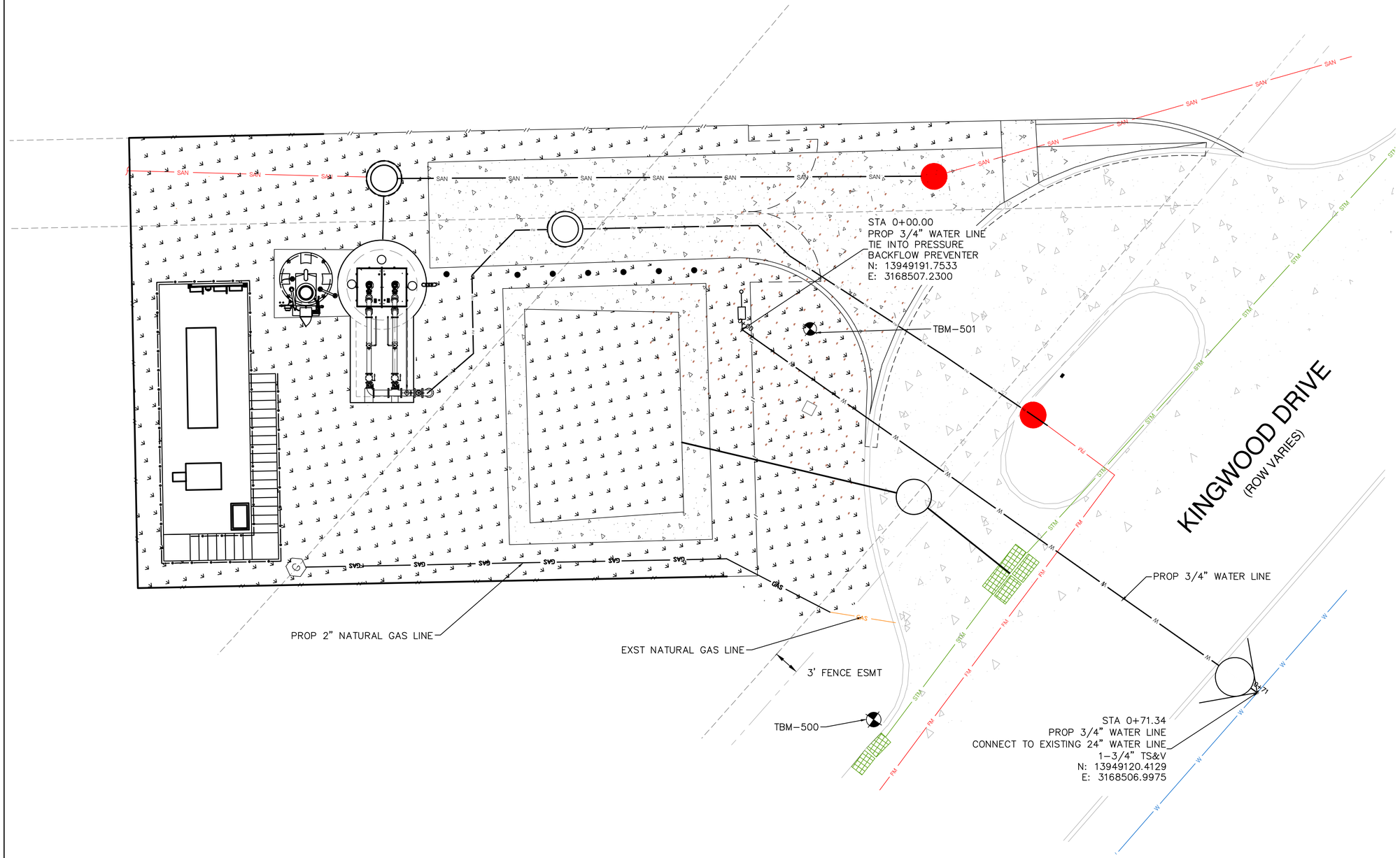

TEMPORARY BENCHMARK DESCRIPTION

TBM-500 CUT "X" IN CURB INLET - ELEVATION 56.44'
TBM-501 CUT "X" IN CONCRETE PAD - ELEVATION 55.02'

LEGEND

- PROPOSED PAVEMENT
- EXISTING PAVEMENT
- PROPOSED GRASS AREA

NO.	DATE	REVISION	APP.

SCALE: 1"= 6'

0' 6' 12' 18'

NOTICE:
FOR YOUR SAFETY, YOU ARE REQUIRED BY TEXAS LAW TO CALL 811 AT LEAST 48 HOURS BEFORE YOU DIG SO THAT UNDERGROUND LINES CAN BE MARKED. THIS SIGNATURE DOES NOT FULFILL YOUR OBLIGATION TO CALL 811

VERIFICATION OF PRIVATE UTILITY LINES

Date

CenterPoint Energy natural gas utilities shown. (Gas service lines are not shown). This signature not be used for conflict verification.

Signature valid for six months.

Date

CenterPoint Energy/UNDERGROUND Electrical Facilities Verification ONLY. (This signature verifies existing underground facilities – not to be used for conflict verification)

Signature valid for six months.

Date

Approved for AT&T underground conduit facilities only.
Signature valid for one year.

PAPE-DAWSON
2107 CITYWEST BLVD, 3RD FLR I HOUSTON, TX 77042 I 713.428.2400
TEXAS ENGINEERING FIRM #470 I TEXAS SURVEYING FIRM #10028800

PAPE-DAWSON
2107 CITYWEST BOULEVARD
3RD FLR
HOUSTON, TEXAS 77402
713-428-2400
TX FIRM #470

SURVEYED BY:
PAPE-DAWSON
FB NO. 24-018

THIS DOCUMENT IS RELEASED FOR INTERIM REVIEW UNDER THE AUTHORIZATION OF AMIRHOSSEIN SHOKOUHI, P.E. (#139835) AND IS **NOT TO BE USED FOR CONSTRUCTION.**

CITY OF HOUSTON
HOUSTON PUBLIC WORKS

LIFT STATION REHABILITATION AND RECONSTRUCTION
BEN'S BRANCH, WOODLAND RIDGE, ELMWOOD HILLS, FOREST SHORES, TRAIL RIVER, RIVERLAWN

CIVIL

FOREST SHORES LIFT STATION PROPOSED POTABLE WATER LINE PLAN

WBS NUMBER	FOR CITY OF HOUSTON USE ONLY
R-000267-0180-3	
DRAWING SCALE	
AS NOTED	
CITY OF HOUSTON PM	
BRENDA JOHNSON P.E.	
SHEET NO. 252 OF 338	

FS-C-07

FILE PATH: K:\Projects\423\77 COH LS Package\00\03 CADD\Plans\Sheets\07 Forest Shores\FS WATER LINE PLAN.dwg

PD will finalize the Paving and Grading sheet, including the elevations in 90% deliverable.

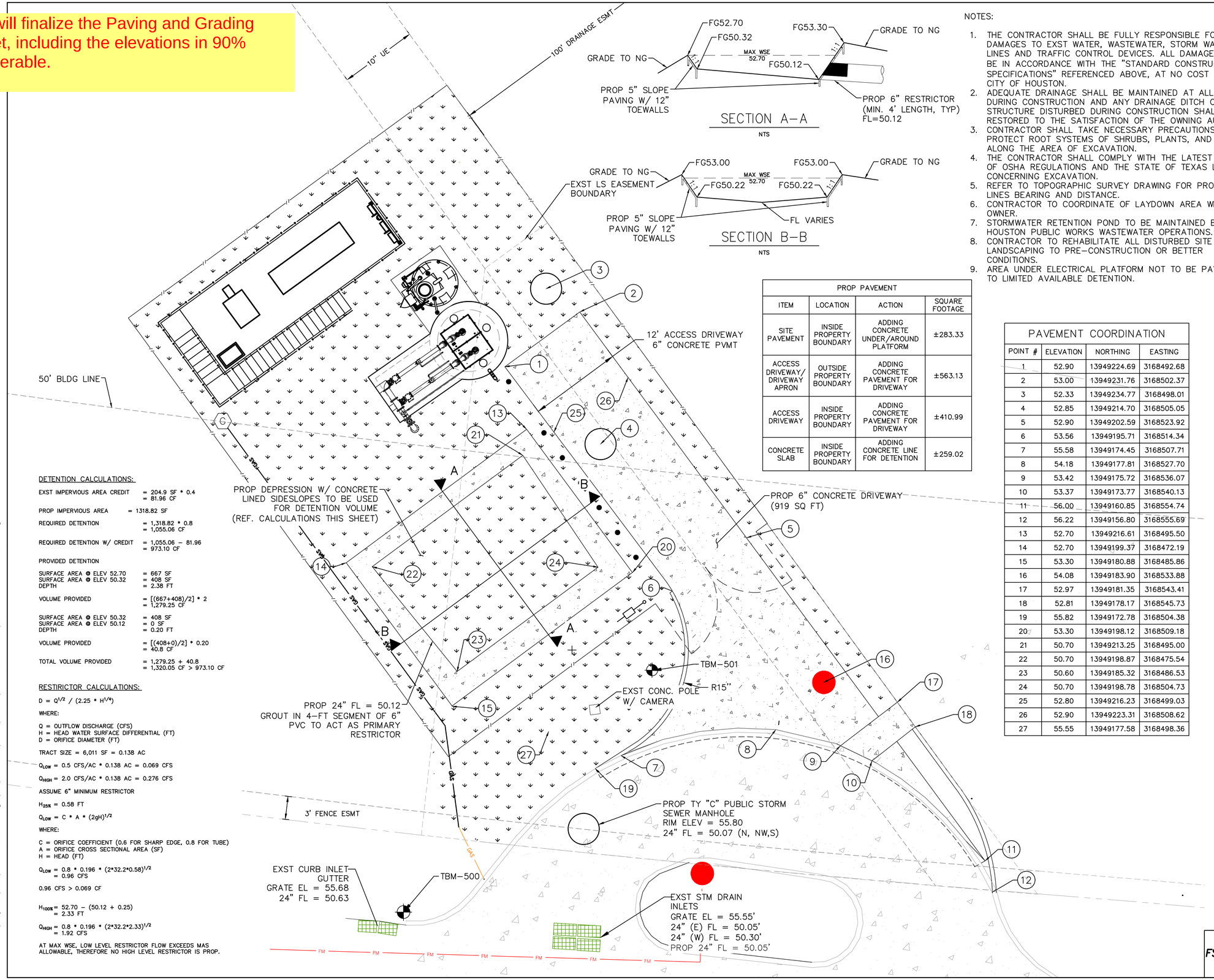

SECTION A-A
NTS

SECTION B-B
NTS

NOTES:

1. THE CONTRACTOR SHALL BE FULLY RESPONSIBLE FOR ANY DAMAGES TO EXST WATER, WASTEWATER, STORM WATER LINES AND TRAFFIC CONTROL DEVICES. ALL DAMAGES SHALL BE IN ACCORDANCE WITH THE "STANDARD CONSTRUCTION SPECIFICATIONS" REFERENCED ABOVE, AT NO COST TO THE CITY OF HOUSTON.
2. ADEQUATE DRAINAGE SHALL BE MAINTAINED AT ALL TIMES DURING CONSTRUCTION AND ANY DRAINAGE DITCH OR STRUCTURE DISTURBED DURING CONSTRUCTION SHALL BE RESTORED TO THE SATISFACTION OF THE OWNING AUTHORITY.
3. CONTRACTOR SHALL TAKE NECESSARY PRECAUTIONS TO PROTECT ROOT SYSTEMS OF SHRUBS, PLANTS, AND TREES ALONG THE AREA OF EXCAVATION.
4. THE CONTRACTOR SHALL COMPLY WITH THE LATEST EDITION OF OSHA REGULATIONS AND THE STATE OF TEXAS LAWS CONCERNING EXCAVATION.
5. REFER TO TOPOGRAPHIC SURVEY DRAWING FOR PROPERTY LINES BEARING AND DISTANCE.
6. CONTRACTOR TO COORDINATE OF LAYDOWN AREA WITH OWNER.
7. STORMWATER RETENTION POND TO BE MAINTAINED BY HOUSTON PUBLIC WORKS WASTEWATER OPERATIONS.
8. CONTRACTOR TO REHABILITATE ALL DISTURBED SITE & LANDSCAPING TO PRE-CONSTRUCTION OR BETTER CONDITIONS.
9. AREA UNDER ELECTRICAL PLATFORM NOT TO BE PAVED DUE TO LIMITED AVAILABLE DETENTION.

PROP PAVEMENT			
ITEM	LOCATION	ACTION	SQUARE FOOTAGE
SITE PAVEMENT	INSIDE PROPERTY BOUNDARY	ADDING CONCRETE UNDER/AROUND PLATFORM	±283.33
ACCESS DRIVEWAY/ DRIVEWAY APRON	OUTSIDE PROPERTY BOUNDARY	ADDING CONCRETE PAVEMENT FOR DRIVEWAY	±563.13
ACCESS DRIVEWAY	INSIDE PROPERTY BOUNDARY	ADDING CONCRETE PAVEMENT FOR DRIVEWAY	±410.99
CONCRETE SLAB	INSIDE PROPERTY BOUNDARY	ADDING CONCRETE LINE FOR DETENTION	±259.02

DETENTION CALCULATIONS:

EXST IMPERVIOUS AREA CREDIT = 204.9 SF * 0.4 = 81.96 CF

PROP IMPERVIOUS AREA = 1318.82 SF

REQUIRED DETENTION = 1,318.82 * 0.8 = 1,055.06 CF

REQUIRED DETENTION W/ CREDIT = 1,055.06 - 81.96 = 973.10 CF

PROVIDED DETENTION

SURFACE AREA @ ELEV 52.70 = 667 SF
SURFACE AREA @ ELEV 50.32 = 408 SF
DEPTH = 2.38 FT

VOLUME PROVIDED = [(667+408)/2] * 2 = 1,279.25 CF

SURFACE AREA @ ELEV 50.32 = 408 SF
SURFACE AREA @ ELEV 50.12 = 0 SF
DEPTH = 0.20 FT

VOLUME PROVIDED = [(408+0)/2] * 0.20 = 40.8 CF

TOTAL VOLUME PROVIDED = 1,279.25 + 40.8 = 1,320.05 CF > 973.10 CF

RESTIRICTOR CALCULATIONS:

$D = Q^{1/2} / (2.25 * H^{1/4})$

WHERE:

Q = OUTFLOW DISCHARGE (CFS)
H = HEAD WATER SURFACE DIFFERENTIAL (FT)
D = ORIFICE DIAMETER (FT)

TRACT SIZE = 6,011 SF = 0.138 AC

Q_{LOW} = 0.5 CFS/AC * 0.138 AC = 0.069 CFS

Q_{HIGH} = 2.0 CFS/AC * 0.138 AC = 0.276 CFS

ASSUME 6" MINIMUM RESTRICTOR

$H_{25\%}$ = 0.58 FT

$Q_{LOW} = C * A * (2gH)^{1/2}$

WHERE:

C = ORIFICE COEFFICIENT (0.6 FOR SHARP EDGE, 0.8 FOR TUBE)
A = ORIFICE CROSS SECTIONAL AREA (SF)
H = HEAD (FT)

$Q_{LOW} = 0.8 * 0.196 * (2*32.2*0.58)^{1/2}$ = 0.96 CFS

0.96 CFS > 0.069 CF

$H_{100\%} = 52.70 - (50.12 + 0.25)$ = 2.33 FT

$Q_{HIGH} = 0.8 * 0.196 * (2*32.2*2.33)^{1/2}$ = 1.92 CFS

AT MAX WSE, LOW LEVEL RESTRICTOR FLOW EXCEEDS MAS ALLOWABLE, THEREFORE NO HIGH LEVEL RESTRICTOR IS PROP.

PAVEMENT COORDINATION			
POINT #	ELEVATION	NORTHING	EASTING
1	52.90	13949224.69	3168492.68
2	53.00	13949231.76	3168502.37
3	52.33	13949234.77	3168498.01
4	52.85	13949214.70	3168505.05
5	52.90	13949202.59	3168523.92
6	53.56	13949195.71	3168514.34
7	55.58	13949174.45	3168507.71
8	54.18	13949177.81	3168527.70
9	53.42	13949175.72	3168536.07
10	53.37	13949173.77	3168540.13
11	56.00	13949160.85	3168554.74
12	56.22	13949156.80	3168555.69
13	52.70	13949216.61	3168495.50
14	52.70	13949199.37	3168472.19
15	53.30	13949180.88	3168485.86
16	54.08	13949183.90	3168533.88
17	52.97	13949181.35	3168543.41
18	52.81	13949178.17	3168545.73
19	55.82	13949172.78	3168504.38
20	53.30	13949198.12	3168509.18
21	50.70	13949213.25	3168495.00
22	50.70	13949198.87	3168475.54
23	50.60	13949185.32	3168486.53
24	50.70	13949198.78	3168504.73
25	52.80	13949216.23	3168499.03
26	52.90	13949223.31	3168508.62
27	55.55	13949177.58	3168498.36

TEMPORARY BENCHMARK DESCRIPTION

TBM-500 CUT "X" IN CURB INLET - ELEVATION 56.44'
TBM-501 CUT "X" IN CONCRETE PAD - ELEVATION 55.02'

LEGEND

PROPOSED PAVEMENT

EXISTING PAVEMENT

PROPOSED GRASS AREA

SCALE: 1"= 6'

0' 6' 12' 18'

NO.	DATE	REVISION	APP.

NOTICE:
FOR YOUR SAFETY, YOU ARE REQUIRED BY TEXAS LAW TO CALL 811 AT LEAST 48 HOURS BEFORE YOU DIG SO THAT UNDERGROUND LINES CAN BE MARKED. THIS SIGNATURE DOES NOT FULFILL YOUR OBLIGATION TO CALL 811

VERIFICATION OF PRIVATE UTILITY LINES

Date

CenterPoint Energy natural gas utilities shown. (Gas service lines are not shown). This signature not be used for conflict verification.

Signature valid for six months.

Date

CenterPoint Energy/UNDERGROUND Electrical Facilities Verification ONLY. (This signature verifies existing underground facilities - not to be used for conflict verification)

Signature valid for six months.

Date

Approved for AT&T underground conduit facilities only.
Signature valid for one year.

PAPE-DAWSON
2107 CITYWEST BLVD, 3RD FLR I HOUSTON, TX 77042 I 713.428.2400
TEXAS ENGINEERING FIRM #470 I TEXAS SURVEYING FIRM #10028800

PAPE-DAWSON
2107 CITYWEST BOULEVARD
3RD FLR
HOUSTON, TEXAS 77402
713-428-2400
TX FIRM #470

SURVEYED BY:
PAPE-DAWSON
FB NO. 24-018

THIS DOCUMENT IS RELEASED FOR INTERIM REVIEW UNDER THE AUTHORIZATION OF AMIRHOSSEIN SHOKOUHI, P.E. (#139835) AND IS **NOT TO BE USED FOR CONSTRUCTION.**

CITY OF HOUSTON
HOUSTON PUBLIC WORKS

LIFT STATION REHABILITATION AND RECONSTRUCTION
BEN'S BRANCH, WOODLAND RIDGE, ELMWOOD HILLS, FOREST SHORES, TRAIL RIVER, RIVERLAWN

CIVIL

FOREST SHORES LIFT STATION PAVING AND GRADING PLAN

WBS NUMBER	FOR CITY OF HOUSTON USE ONLY
R-000267-0180-3	
DRAWING SCALE	
AS NOTED	
CITY OF HOUSTON PM	
BRENDA JOHNSON P.E.	
SHEET NO. 253 OF 338	

FS-C-08

FILE PATH: K:\Projects\423\77 COH LS Package\00\03 CADD\Plans\Sheets\07 Forest Shores\FS PAVING AND GRADING.dwg

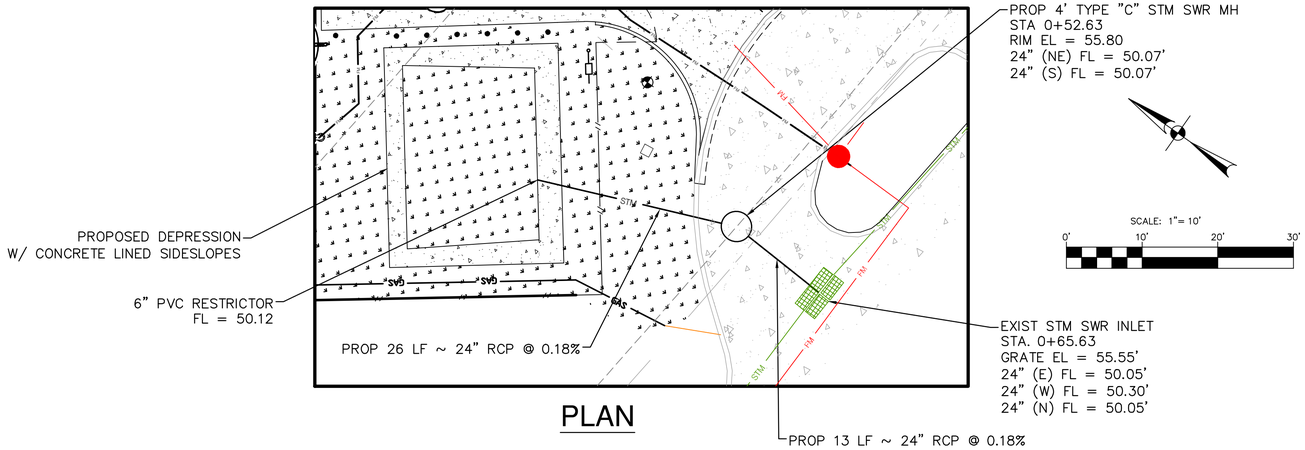

PLAN

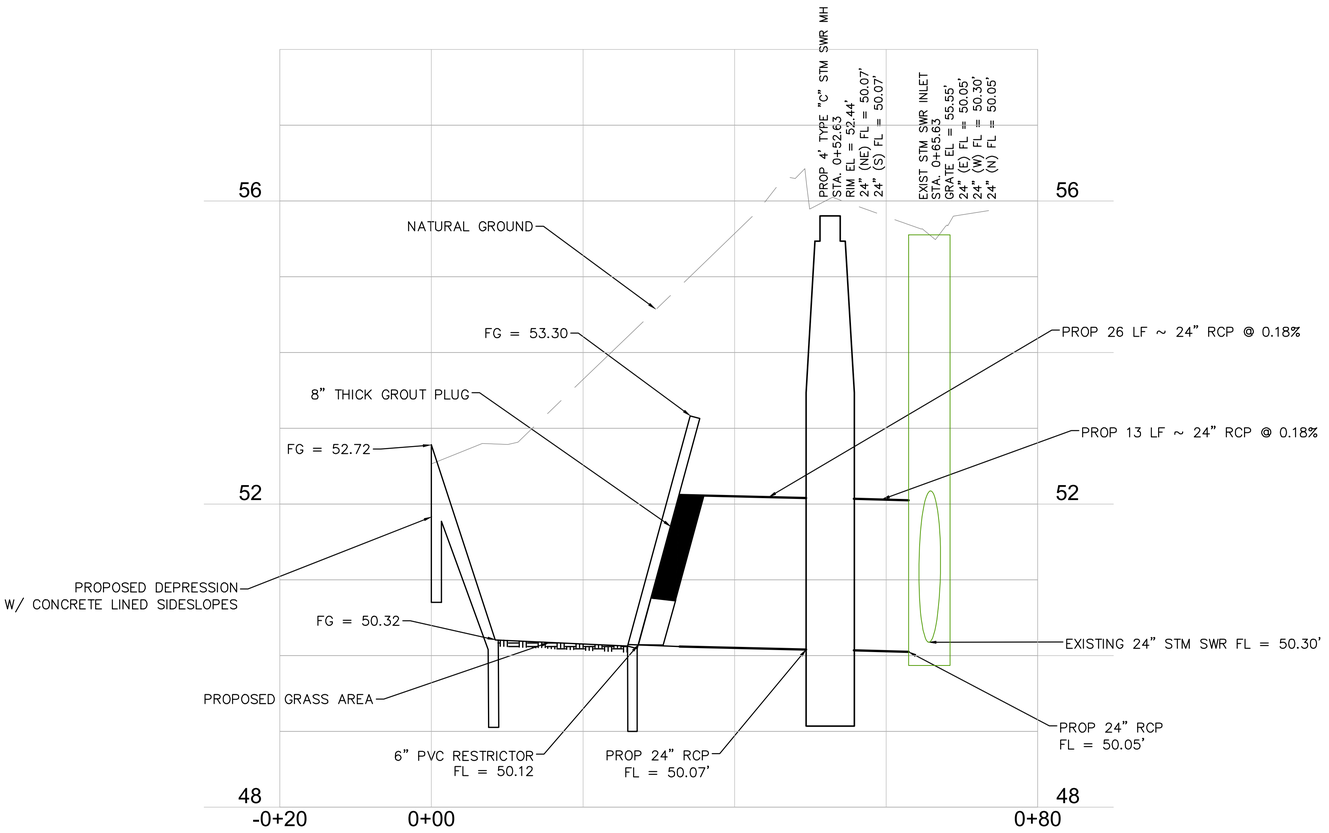

FOREST SHORES PROPOSED STORM SEWER PROFILE

NO.	DATE	REVISION	APP.

NOTICE:
FOR YOUR SAFETY, YOU ARE REQUIRED BY TEXAS LAW TO CALL 811 AT LEAST 48 HOURS BEFORE YOU DIG SO THAT UNDERGROUND LINES CAN BE MARKED. THIS SIGNATURE DOES NOT FULFILL YOUR OBLIGATION TO CALL 811

VERIFICATION OF PRIVATE UTILITY LINES

Date

CenterPoint Energy natural gas utilities shown. (Gas service lines are not shown). This signature not be used for conflict verification.

Signature valid for six months.

Date

CenterPoint Energy/UNDERGROUND Electrical Facilities Verification ONLY. (This signature verifies existing underground facilities – not to be used for conflict verification)

Signature valid for six months.

Date

Approved for AT&T underground conduit facilities only.
Signature valid for one year.

PAPE–DAWSON
2107 CITYWEST BLVD, 3RD FLR I HOUSTON, TX 77042 I 713.428.2400
TEXAS ENGINEERING FIRM #470 I TEXAS SURVEYING FIRM #10028800

PAPE–DAWSON
2107 CITYWEST BOULEVARD
3RD FLR
HOUSTON, TEXAS 77402
713–428–2400
TX FIRM #470

SURVEYED BY:
PAPE–DAWSON
FB NO. 24–018

THIS DOCUMENT IS RELEASED FOR INTERIM REVIEW UNDER THE AUTHORIZATION OF AMIRHOSSEIN SHOKOUHI, P.E. (#139835) AND IS **NOT TO BE USED FOR CONSTRUCTION.**

CITY OF HOUSTON
HOUSTON PUBLIC WORKS

LIFT STATION REHABILITATION AND RECONSTRUCTION
BEN'S BRANCH, WOODLAND RIDGE, ELMWOOD HILLS, FOREST SHORES, TRAIL RIVER, RIVERLAWN

CIVIL

FOREST SHORES LIFT STATION STORM SEWER PLAN AND PROFILE

WBS NUMBER	FOR CITY OF HOUSTON USE ONLY
R–000267–0180–3	
DRAWING SCALE	
AS NOTED	
CITY OF HOUSTON PM	
BRENDA JOHNSON P.E.	
SHEET NO. 254 OF 338	

FS–C–09

FILE PATH: K:\Projects\423\77 COH LS Package\00\03 CADD\Plans\Sheets\07 Forest Shores\FS STORM SEWER PROF.dwg

COH SWPPP NOTES:

1. CONTRACTOR SHALL IMPLEMENT INLET PROTECTION DEVICES AND REINFORCED FILTER FABRIC BARRIER ALONG ROAD AND SIDE DITCHES AT LOCATIONS SHOWN ON THE TYPICAL STORM WATER POLLUTION PREVENTION (SWPP) PLANS TO KEEP SILT AND OR EXCAVATED MATERIALS FROM ENTERING INTO THE STORM WATER INLETS AND DITCHES EVENTUALLY POLLUTING THE RECEIVING STORM.

2. DURING THE EXCAVATION PHASE OF THE PROJECT, CONTRACTOR SHALL SCHEDULE THE WORK IN SHORT SEGMENTS SO THAT EXCAVATION MATERIAL CAN BE QUICKLY HAULED AWAY FROM THE SITE AND TO PREVENT IT FROM STAYING UNCOLLECTED ON THE EXISTING PAVEMENT. ANY LOOSE EXCAVATED MATERIAL WHICH FALLS ON PAVEMENTS OR DRIVEWAYS SHALL BE SWEPT BACK INTO THE EXCAVATED AREA.

3. CONTRACTOR SHALL CLEAN UP THE EXISTING STREET INTERSECTIONS AND DRIVEWAYS DAILY, AS NECESSARY, TO REMOVE ANY EXCESS MUD, SILT OR ROCK TRACKED FORM THE EXCAVATED AREA.

4. CONTRACTOR SHALL FOLLOW GOOD HOUSEKEEPING PRACTICES DURING THE CONSTRUCTION OF THE PROJECT, ALWAYS CLEANING UP DIRT AND LOOSE MATERIAL AS CONSTRUCTION PROGRESSES.

5. CONTRACTOR TO INSPECT AND MAINTAIN THE AREAS LISTED BELOW AT LEAST ONCE EVERY FOURTEEN (14) CALENDAR DAYS AND WITHIN 24 HOURS OF THE END OF A STORM EVENT OF 0.5 INCHES OR GREATER.

- DISTURBED AREAS OF THE CONSTRUCTION SITE THAT HAVE NOT BEEN FINALLY STABILIZED.
- AREAS USED FOR STORAGE OF MATERIALS THAT ARE EXPOSED TO PRECIPITATION.
- STRUCTURAL CONTROL MEASURES.
- LOCATIONS WHERE VEHICLES ENTER OR EXIT THE SITE.

6. CONTRACTOR TO BE RESPONSIBLE TO MAINTAIN EXISTING DITCHES AND OR CULVERTS FOR UNOBSTRUCTED DRAINAGE AT ALL TIMES. WHERE SODDING IS DISTURBED BY EXCAVATION ON BACKFILLING OPERATIONS, SUCH AREAS SHALL BE REPLACED BY SEEDING OR SODDING. SLOPES 4:1 OR STEEPER SHALL BE REPLACED BY BLOCK SODDING.

7. SEE SHEET GC-02 FOR DETAILS.

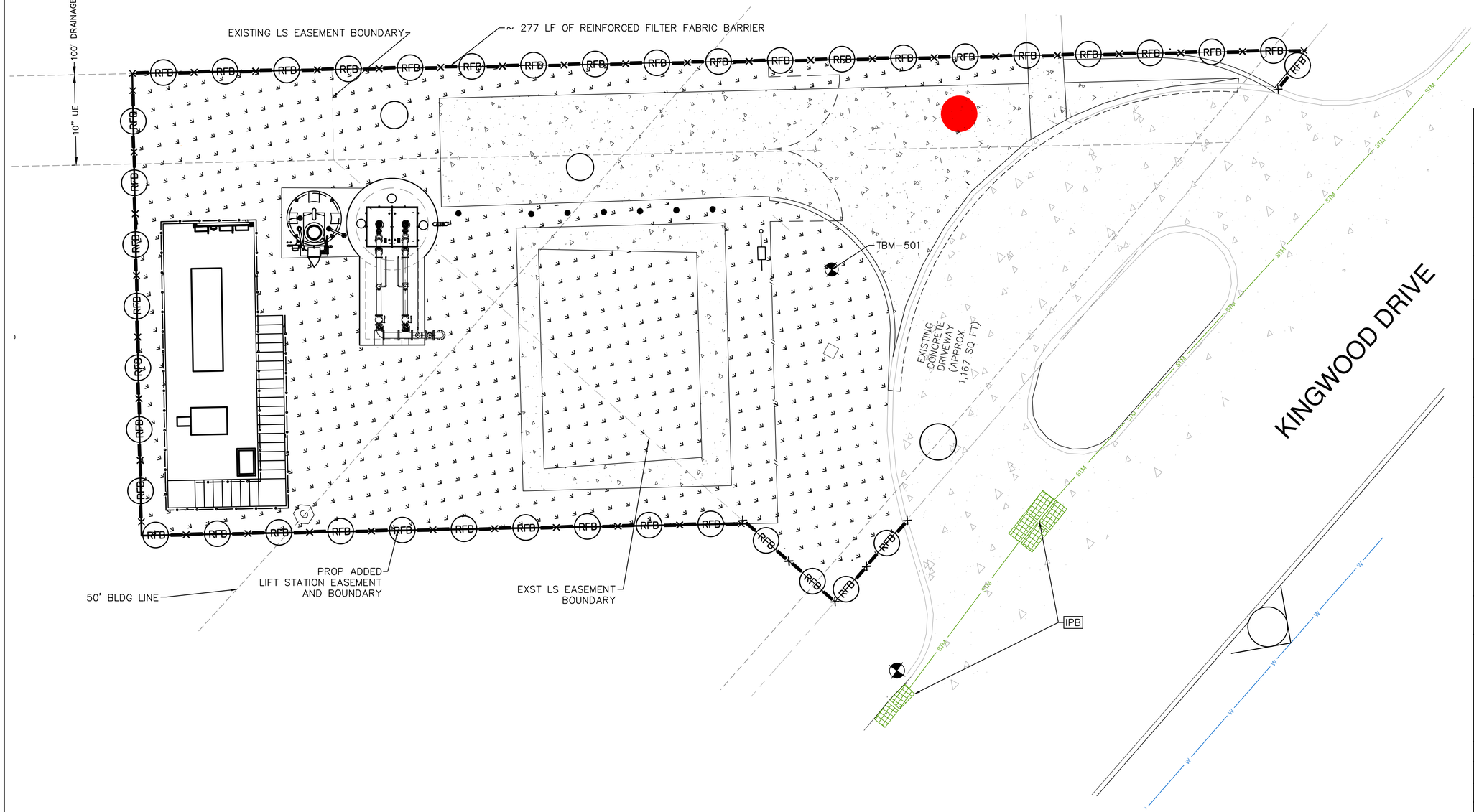

TEMPORARY BENCHMARK DESCRIPTION

TBM-500 CUT "X" IN CURB INLET – ELEVATION 56.44'
TBM-501 CUT "X" IN CONCRETE PAD – ELEVATION 55.02'

LEGEND

- RFB — REINFORCED FILTER FABRIC BARRIER
- PROPOSED PAVEMENT
- EXISTING GRAVEL AREA
- IPB — INLET PROTECTION BARRIER

SCALE: 1"= 6'
0' 6' 12' 18'

NO.	DATE	REVISION	APP.

NOTICE:
FOR YOUR SAFETY, YOU ARE REQUIRED BY TEXAS LAW TO CALL 811 AT LEAST 48 HOURS BEFORE YOU DIG SO THAT UNDERGROUND LINES CAN BE MARKED. THIS SIGNATURE DOES NOT FULFILL YOUR OBLIGATION TO CALL 811

VERIFICATION OF PRIVATE UTILITY LINES

Date

CenterPoint Energy natural gas utilities shown. (Gas service lines are not shown). This signature not be used for conflict verification.

Signature valid for six months.

Date

CenterPoint Energy/UNDERGROUND Electrical Facilities Verification ONLY. (This signature verifies existing underground facilities – not to be used for conflict verification)

Signature valid for six months.

Date

Approved for AT&T underground conduit facilities only.
Signature valid for one year.

PAPE-DAWSON
2107 CITYWEST BLVD, 3RD FLR I HOUSTON, TX 77042 I 713.428.2400
TEXAS ENGINEERING FIRM #470 I TEXAS SURVEYING FIRM #10028800

PAPE-DAWSON
2107 CITYWEST BOULEVARD
3RD FLR
HOUSTON, TEXAS 77402
713-428-2400
TX FIRM #470

SURVEYED BY:
PAPE-DAWSON
FB NO. 24-018

THIS DOCUMENT IS RELEASED FOR INTERIM REVIEW UNDER THE AUTHORIZATION OF AMIRHOSSEIN SHOKOUHI, P.E. (#139835) AND IS **NOT TO BE USED FOR CONSTRUCTION.**

CITY OF HOUSTON
HOUSTON PUBLIC WORKS

LIFT STATION REHABILITATION AND RECONSTRUCTION
BEN'S BRANCH, WOODLAND RIDGE, ELMWOOD HILLS, FOREST SHORES, TRAIL RIVER, RIVERLAWN

CIVIL

FOREST SHORES LIFT STATION SWPPP

WBS NUMBER	FOR CITY OF HOUSTON USE ONLY
R-000267-0180-3	
DRAWING SCALE	
AS NOTED	
CITY OF HOUSTON PM	
BRENDA JOHNSON P.E.	
SHEET NO. 256 OF 338	

FS-C-10

FILE PATH: K:\Projects\423\77 COH LS Package\00\03 CADD\Plans\Sheets\07 Forest Shores\FS SWPPP.dwg

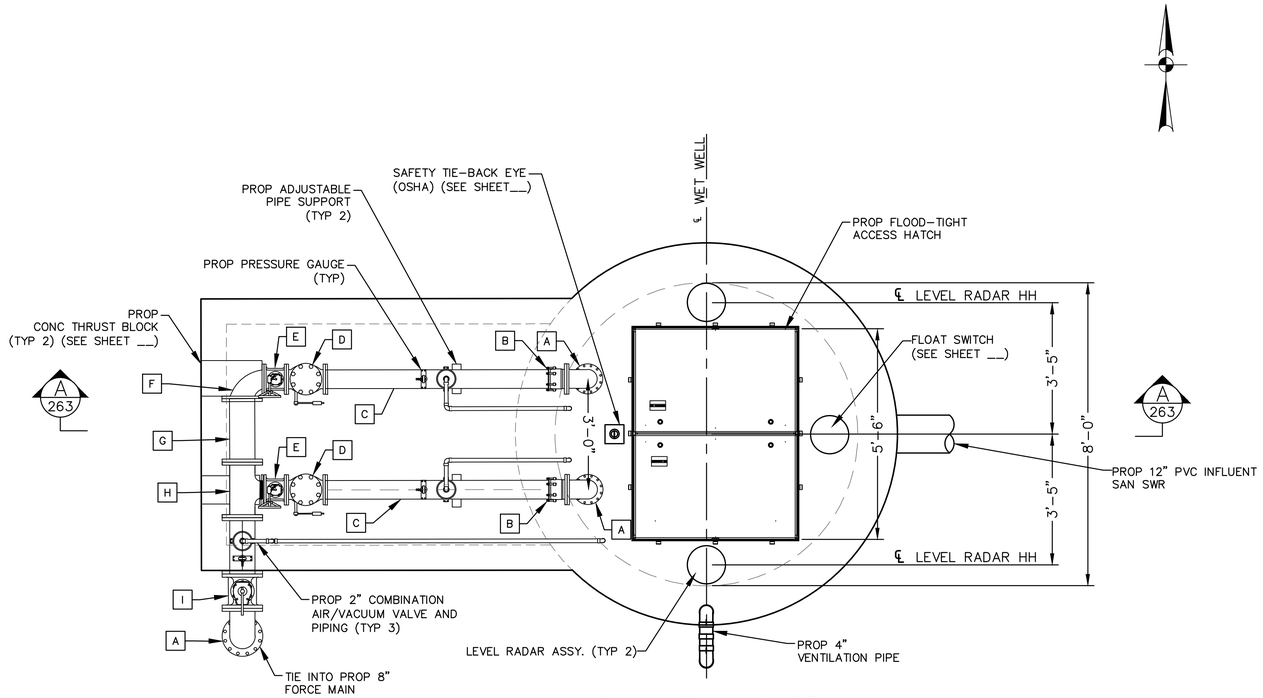

PLAN VIEW @ GRADE

SCALE 1/2"=1'-0"

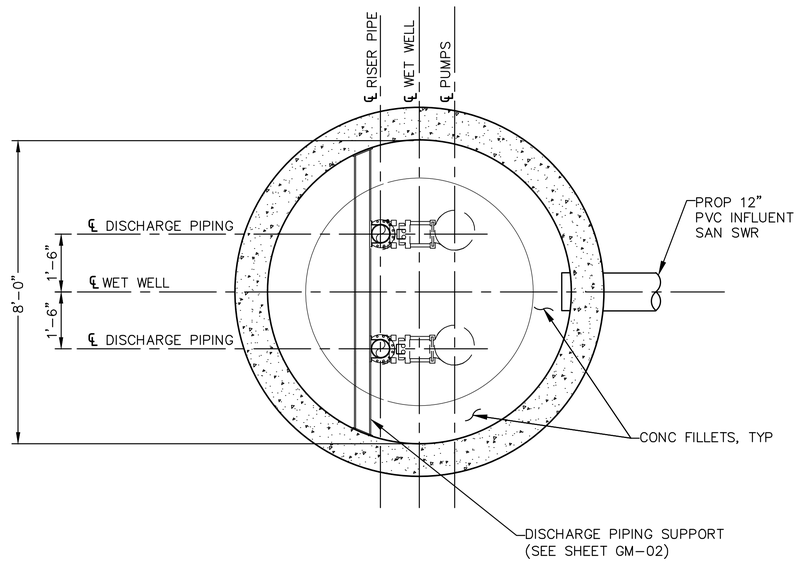

SECTION VIEW ELEVATION ----'

SCALE 1/2"=1'-0"

PIPE AND FITTING SCHEDULE

MARK	DESCRIPTION	CONNECTION
A	6"x90° BEND	FLG/FLG
B	6" RESTRAINED FLANGED COUPLING ADAPTOR	FCA501 OR APPROVED EQUAL
C	6" SPOOL	FLG/FLG
D	6" CHECK VALVE	FLG
E	6" PLUG VALVE	FLG
F	6"x8"x90° REDUCING BEND	FLG/FLG
G	8" SPOOL	FLG/FLG
H	8"x6" REDUCING TEE	FLG
I	8" PLUG VALVE	FLG

LIFT STATION NOTES:

1. ALL SUPPORT BRACKETS, HARDWARE, ANCHORS, BOLTS, ETC. INSIDE WET WELL SHALL BE TYPE 316 STAINLESS STEEL.
2. ALL INTERIOR SURFACES OF CONCRETE WET WELL SHALL BE COATED WITH AN 80 MIL (MIN.) COAT OF RAVEN 405 ULTRA HIGH BUILD EPOXY COATING, SPRAY WALL EPOXY COATING, OR APPROVED EQUAL.
3. ALL PUMP DISCHARGE PIPING IN WET WELL AND VALVE PAD TO BE FLANGED (INSIDE WET WELL/PAD) OR TR FLEX RESTRAINED MECHANICAL JOINT (WHEN BURIED) DUCTILE IRON PIPING. ALL DUCTILE IRON PIPING SHALL BE EPOXY LINED WITH TNEMEC SERIES 431 PERMA-SHIELD PL CERAMIC EPOXY OR APPROVED EQUAL.
4. ALL EXPOSED DUCTILE IRON PIPING, FITTINGS, AND VALVES SHALL BE SANDBLASTED AND COATED WITH TWO (2) COATS OF TNEMEC SERIES 27WB TYPOXY APPLIED AT 6.0 TO 8.0 DRY MILS AND TOPCOATED WITH TNEMEC SERIES 740 UVX APPLIED AT 3.0 TO 5.0 DRY MILS. FINAL COLOR TO BE APPROVED BY THE DISTRICT. SHOP PRIMING WITH TNEMEC SERIES N140 IS ACCEPTABLE. BITUMASTIC COATING SHALL NOT BE APPLIED TO EXPOSED DI PIPING.
5. ALL BURIED DUCTILE IRON PIPING, FITTINGS, AND VALVES SHALL BE WRAPPED WITH A POLYETHYLENE ENCASEMENT IN ACCORDANCE WITH THE LATEST REVISION OF AWWA C105.
6. ALL MECHANICAL JOINT FITTINGS TO BE RESTRAINED USING SERIES 1100 OR 2000PV MEGALUG JOINT RESTRAINTS.
7. PUMP SPACING DIMENSIONS SHOWN ARE APPROXIMATE. ACTUAL DIMENSIONS SHALL BE DETERMINED BY SPECIFIC PUMP MANUFACTURER.
8. PRIMARY LEVEL CONTROL WILL BE PROVIDED BY A SUBMERSIBLE LEVEL TRANSDUCER WITH OPERATION POINTS AS DETERMINED BY ENGINEER. MULTITRODE PROBES ARE FOR BACKUP OPERATION ONLY. REFER TO ELECTRICAL SPECIFICATIONS FOR EQUIPMENT INFORMATION.
9. FLOOD-TIGHT ACCESS HATCH AS SHOWN OR AS REQUIRED BY PUMP MANUFACTURER. DIMENSION MAY VARY PER HATCH MANUFACTURER.

FS-C-11

NO.	DATE	REVISION	APP.

NOTICE:
FOR YOUR SAFETY, YOU ARE REQUIRED BY TEXAS LAW TO CALL 811 AT LEAST 48 HOURS BEFORE YOU DIG SO THAT UNDERGROUND LINES CAN BE MARKED. THIS SIGNATURE DOES NOT FULFILL YOUR OBLIGATION TO CALL 811

VERIFICATION OF PRIVATE UTILITY LINES

Date

CenterPoint Energy natural gas utilities shown. (Gas service lines are not shown). This signature not be used for conflict verification.

Signature valid for six months.

Date

CenterPoint Energy/UNDERGROUND Electrical Facilities Verification ONLY. (This signature verifies existing underground facilities – not to be used for conflict verification)

Signature valid for six months.

Date

Approved for AT&T underground conduit facilities only.
Signature valid for one year.

PAPE-DAWSON
2107 CITYWEST BLVD, 3RD FLR I HOUSTON, TX 77042 I 713.428.2400
TEXAS ENGINEERING FIRM #470 I TEXAS SURVEYING FIRM #10028800

PAPE-DAWSON
2107 CITYWEST BOULEVARD
3RD FLR
HOUSTON, TEXAS 77402
713-428-2400
TX FIRM #470

SURVEYED BY:
PAPE-DAWSON
FB NO. 24-018

THIS DOCUMENT IS RELEASED FOR INTERIM REVIEW UNDER THE AUTHORIZATION OF AMIRHOSSEIN SHOKOUHI, P.E. (#139835) AND IS **NOT TO BE USED FOR CONSTRUCTION.**

CITY OF HOUSTON

HOUSTON PUBLIC WORKS

LIFT STATION REHABILITATION AND RECONSTRUCTION
BEN'S BRANCH, WOODLAND RIDGE, ELMWOOD HILLS, FOREST SHORES, TRAIL RIVER, RIVERLAWN

MECHANICAL

FOREST SHORES LIFT STATION PROPOSED PLAN

WBS NUMBER	FOR CITY OF HOUSTON USE ONLY
R-000267-0180-3	
DRAWING SCALE	
AS NOTED	
CITY OF HOUSTON PM	
BRENDA JOHNSON P.E.	
SHEET NO. 262 OF 338	

FILE PATH: K:\Projects\423\77 COH LS Package\00\03 CADD\Plans\Sheets\07 Forest Shores\FS PROP SECTION.dwg

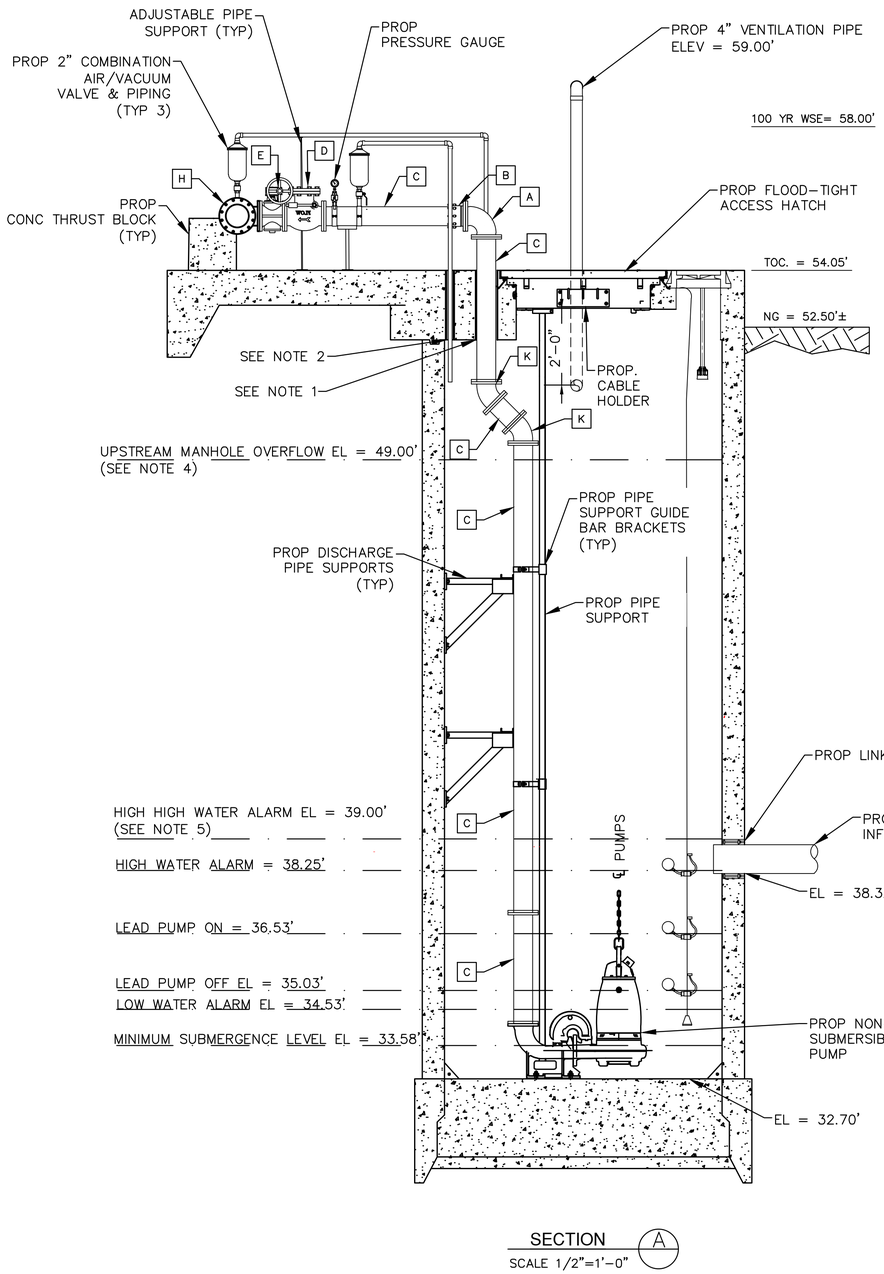

SECTION A
SCALE 1/2"=1'-0"

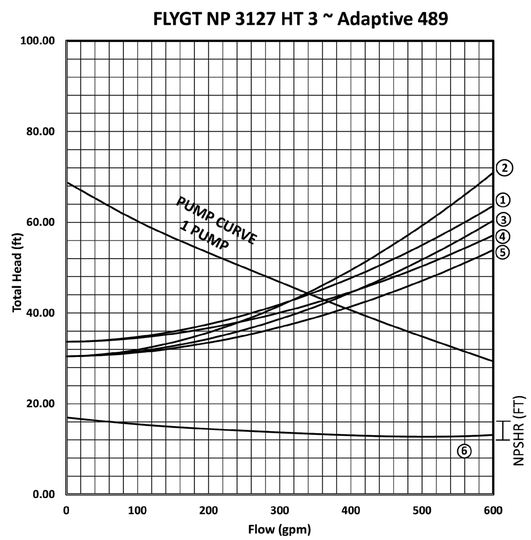

PUMP OPERATION CURVES

PUMP CURVE NOTES:

1. LOW NORMAL OPERATING LEVEL C=120 – DESIGN
2. HIGH NORMAL OPERATING LEVEL C=100 – INFORMATION ONLY (TCEQ)
3. HIGH NORMAL OPERATING LEVEL C=120 – DESIGN
4. HIGH NORMAL OPERATING LEVEL C=140 – INFORMATION ONLY
5. EMERGENCY FLOODED OPERATING LEVEL C=140 – MAXIMUM DISCHARGE
6. NET POSITIVE SUCTION HEAD AVAILABLE (NPSHA) BASED ON NORMAL OPERATING WATER LEVELS
7. PUMP CURVES ARE MODIFIED FOR STATION LOSSES

NOTES:

1. SLEEVED OPENING, SEAL W/ LINK-SEAL OR APPROVED EQUAL. AT TOP OF SLAB FILL VOID AROUND SEAL W/ GROUT & RECESS APPROX ¼" BELOW TOP OF SLAB. (SEE SHEET ___)
2. SLEEVED WET WELL PENETRATION (SEE SHEET ___)
3. PROP ALL PUMPS OFF LEVEL 1 FT HIGHER THE PUMP MIN SUBMERGE LEVEL
4. UPSTREAM MANHOLE OVERFLOW ELEVATION PROVIDED BY CITY OF HOUSTON WASTEWATER PLANNING DEPARTMENT.
5. HIGH HIGH WATER LEVEL ALARM ELEVATION TO PROVIDE MINIMUM 2 HOURS RESPONSE TIME PRIOR TO UPSTREAM MANHOLE OVERFLOW ELEVATION.
6. SEE SHEET FS-C-11 FOR LIFT STATION NOTES

NO.	DATE	REVISION	APP.

PUMP DATA TABLE

PUMP CHARACTERISTICS	PUMP NO. 1	PUMP NO. 2
MOTOR DATA NOMINAL SIZE (HP) MAX SPEED (RPM)	 7.5 1,755	 7.5 1,755
SOLIDS PASSAGE MIN SPHERE (IN)	 <3	 <3
CAPACITY (GPM) DESIGN RUNOUT	 340 956	 340 956
DISCHARGE HEAD (FT) DESIGN RUNOUT SHUT OFF	 44.00 7.89 68.70	 44.00 7.89 68.70
EFFICIENCY (%) DESIGN	 65.6	 65.6
NPSHR (FT) DESIGN RUNOUT	 13.40 25.37	 13.40 25.37
PUMP CYCLE TIME	6	6

STATION OPERATION TABLES

RISING LEVEL CYCLE			
WATER LEVEL DEPTH	WATER LEVEL ELEVATION	ACTION	PUMP(S) IN OPERATION
2.33	35.03	PUMPS OFF LEVEL – NO ACTION	ALL PUMPS ARE OFF
3.83	36.53	LEAD PUMP TURNS ON	LEAD PUMP ON
5.55	38.25	HIGH WATER ALARM ON	HIGH WATER ALARM SOUND
6.30	39.00	HIGH HIGH LEVEL ALARM (FLOAT ON LEVEL)	ALL PUMPS ON (FLOATS)

FALLING LEVEL CYCLE			
WATER LEVEL DEPTH	WATER LEVEL ELEVATION	ACTION	PUMP(S) IN OPERATION
5.80	38.50	FLOAT OFF LEVEL	ALL PUMPS OFF (FLOATS)
5.05	37.75	HIGH WATER LEVEL ALARM OFF	LEAD PUMP ON
2.33	35.03	LEAD PUMP TURNS OFF	ALL PUMPS STOPPED – STANDBY PUMP SWITCHES TO LEAD PUMP
1.83	34.53	LOW LEVEL ALARM	–

PIPE AND FITTING SCHEDULE

MARK	DESCRIPTION	CONNECTION
A	6"x90° BEND	FLG/FLG
B	6" RESTRAINED FLANGED COUPLING ADAPTOR	FCA501 OR APPROVED EQUAL
C	6" SPOOL	FLG/FLG
D	6" CHECK VALVE	FLG
E	6" PLUG VALVE	FLG
F	6"x8"x90° REDUCING BEND	FLG/FLG
G	8" SPOOL	FLG/FLG
H	6"x8" REDUCING TEE	FLG
I	8" PLUG VALVE	FLG
J	8"x45° BEND	FLG
K	6"x45° BEND	FLG
L	8"x45° BEND	FLG/FLG
M	8"x6" REDUCER	FLG/FLG

NOTICE:
FOR YOUR SAFETY, YOU ARE REQUIRED BY TEXAS LAW TO CALL 811 AT LEAST 48 HOURS BEFORE YOU DIG SO THAT UNDERGROUND LINES CAN BE MARKED. THIS SIGNATURE DOES NOT FULFILL YOUR OBLIGATION TO CALL 811

VERIFICATION OF PRIVATE UTILITY LINES

Date

CenterPoint Energy natural gas utilities shown. (Gas service lines are not shown). This signature not be used for conflict verification.

Signature valid for six months.

Date

CenterPoint Energy/UNDERGROUND Electrical Facilities Verification ONLY. (This signature verifies existing underground facilities – not to be used for conflict verification)

Signature valid for six months.

Date

Approved for AT&T underground conduit facilities only.
Signature valid for one year.

PAPE-DAWSON
2107 CITYWEST BLVD, 3RD FLR I HOUSTON, TX 77042 I 713.428.2400
TEXAS ENGINEERING FIRM #470 I TEXAS SURVEYING FIRM #10028800

PAPE-DAWSON
2107 CITYWEST BOULEVARD
3RD FLR
HOUSTON, TEXAS 77402
713-428-2400
TX FIRM #470

SURVEYED BY:
PAPE-DAWSON
FB NO. 24-018

THIS DOCUMENT IS RELEASED FOR INTERIM REVIEW UNDER THE AUTHORIZATION OF AMIRHOSSEIN SHOKOUHI, P.E. (#139835) AND IS **NOT TO BE USED FOR CONSTRUCTION.**

CITY OF HOUSTON
HOUSTON PUBLIC WORKS

LIFT STATION REHABILITATION AND RECONSTRUCTION
BEN'S BRANCH, WOODLAND RIDGE, ELMWOOD HILLS, FOREST SHORES, TRAIL RIVER, RIVERLAWN

MECHANICAL

FOREST SHORES LIFT STATION PROPOSED SECTIONS

WBS NUMBER	FOR CITY OF HOUSTON USE ONLY
R-000267-0180-3	
DRAWING SCALE	
AS NOTED	
CITY OF HOUSTON PM	
BRENDA JOHNSON P.E.	
SHEET NO. 263 OF 338	

FS-C-12

FILE PATH: K:\Projects\423\77 COH LS Package\00\03 CADD\Plans\Sheets\07 Forest Shores\FS PROP SECTION.dwg

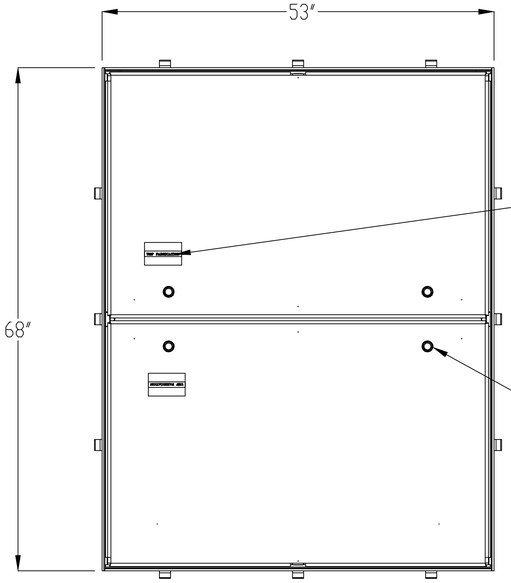

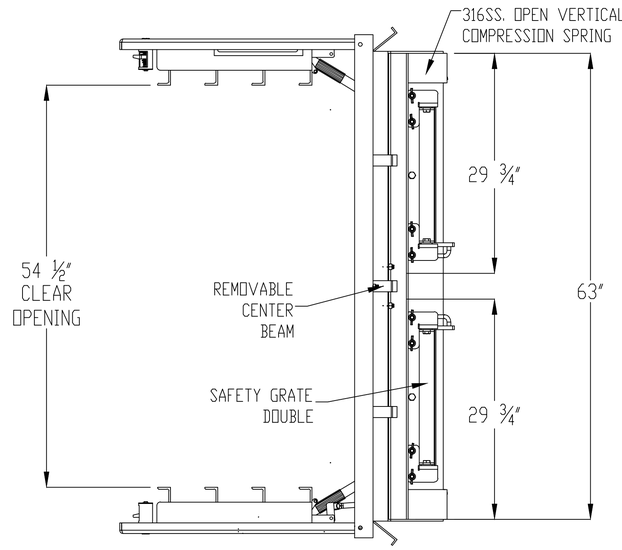

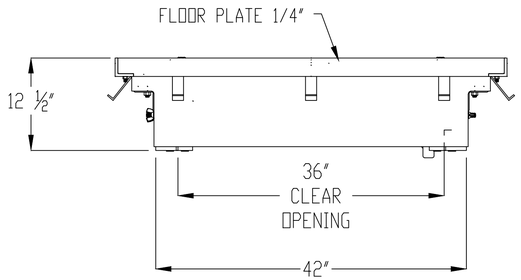

NOTES:
1- MATERIAL: ALUMINUM
MILL FINISH
2- LOADING DESIGNED FOR OFF STREET
LOCATIONS WHICH MAY OCCASIONALLY
RECEIVE H-20 WHEEL LOADS.
3- 316 STAINLESS STEEL BOLTS & NUTS
4- AREA OF FRAME IN CONTACT WITH CONCRETE
TO BE PAINTED WITH BITUMINOUS COATING
5- THIS DESIGN HAS BEEN TESTED AND CERTIFIELD TO BE FLOOD TIGHT
FOR UP TO 13FT. OF WATER, WITH ZERO LEAKAGE.
6- GASKET AND FRAME MUST BE FREE OF ANY DIRT OR DEBRIS PRIOR TO
CLOSING AND ALL CAM LOCKS MUST BE FULLY ENGAGED TO ENSURE
MAXIMUM FLOOD RESISTANCE

INTERPRET DIMENSIONS AND TOLERANCES PER ASME Y14.5M

BREAK ALL SHARP CORNERS & EDGES TO 0.01

TOLERANCES UNLESS OTHERWISE SPECIFIED:
INCHES = +/- 1/16
1/16 = +/- 1/32
1/32 = +/- 1/64

THIS DOCUMENT IS THE PROPERTY OF U.S.F. FABRICATION, INC AND CONTAINS PROPRIETARY INFORMATION IT SHALL NOT BE MODIFIED, COPIED, FURNISHED NOR DISTRIBUTED (IN WHOLE OR IN PART) WITHOUT PROPER AUTHORIZATION OF U.S.F. FABRICATION, INC.

COPYRIGHT © 2025
ALL RIGHTS RESERVED

U.S.F. FABRICATION INC.
HIALEAH, FLORIDA

HATCH ZAHDRB 42X63
ASSEMBLY

DRAWN BY:	SCALE: 1:16	SHEET 2 OF 2	DATE: 9/29/25	
APP'D BY: JG	DWG. NO: 1000290590		SHEET SIZE: B	REV: 0

NO.	DATE	REVISION	APP.

NOTICE:
FOR YOUR SAFETY, YOU ARE REQUIRED BY TEXAS LAW TO CALL 811 AT LEAST 48 HOURS BEFORE YOU DIG SO THAT UNDERGROUND LINES CAN BE MARKED. THIS SIGNATURE DOES NOT FULFILL YOUR OBLIGATION TO CALL 811

VERIFICATION OF PRIVATE UTILITY LINES

Date

CenterPoint Energy natural gas utilities shown. (Gas service lines are not shown). This signature not be used for conflict verification.

Signature valid for six months.

Date

CenterPoint Energy/UNDERGROUND Electrical Facilities Verification ONLY. (This signature verifies existing underground facilities – not to be used for conflict verification)

Signature valid for six months.

Date

Approved for AT&T underground conduit facilities only.
Signature valid for one year.

PAPE-DAWSON
2107 CITYWEST BLVD, 3RD FLR I HOUSTON, TX 77042 I 713.428.2400
TEXAS ENGINEERING FIRM #470 I TEXAS SURVEYING FIRM #10028800

PAPE-DAWSON
2107 CITYWEST BOULEVARD
3RD FLR
HOUSTON, TEXAS 77402
713-428-2400
TX FIRM #470

SURVEYED BY:
PAPE-DAWSON
FB NO. 24-018

THIS DOCUMENT IS RELEASED FOR INTERIM REVIEW UNDER THE AUTHORIZATION OF AMIRHOSSEIN SHOKOUHI, P.E. (#139835) AND IS **NOT TO BE USED FOR CONSTRUCTION.**

CITY OF HOUSTON
HOUSTON PUBLIC WORKS

LIFT STATION REHABILITATION AND RECONSTRUCTION
BEN'S BRANCH, WOODLAND RIDGE, ELMWOOD HILLS, FOREST SHORES, TRAIL RIVER, RIVERLAWN

CIVIL

FOREST SHORES LIFT STATION FLOOD-TIGHT ACCESS HATCH DETAIL

WBS NUMBER	FOR CITY OF HOUSTON USE ONLY
R-000267-0180-3	
DRAWING SCALE	
AS NOTED	
CITY OF HOUSTON PM	
BRENDA JOHNSON P.E.	
SHEET NO. OF 338	

FILE PATH: K:\Projects\423\77 COH LS Package\00\03 CADD\Plans\Sheets\07 Forest Shores\FS ACCESS HATCH DETAIL.dwg

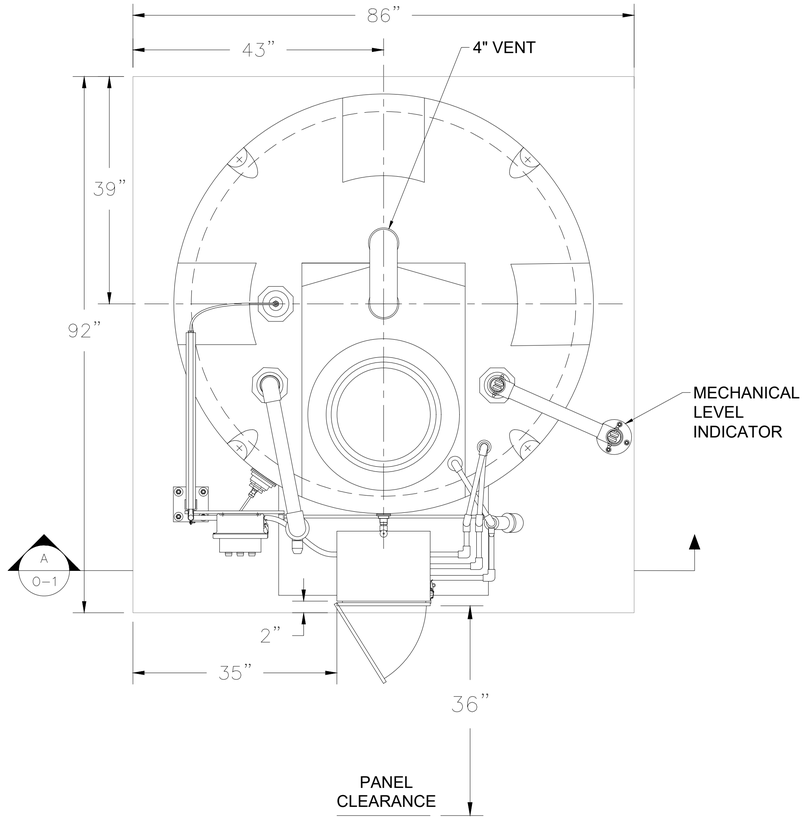

1 / 0-1 CHEMICAL FEED TANK – PLAN VIEW

SCALE

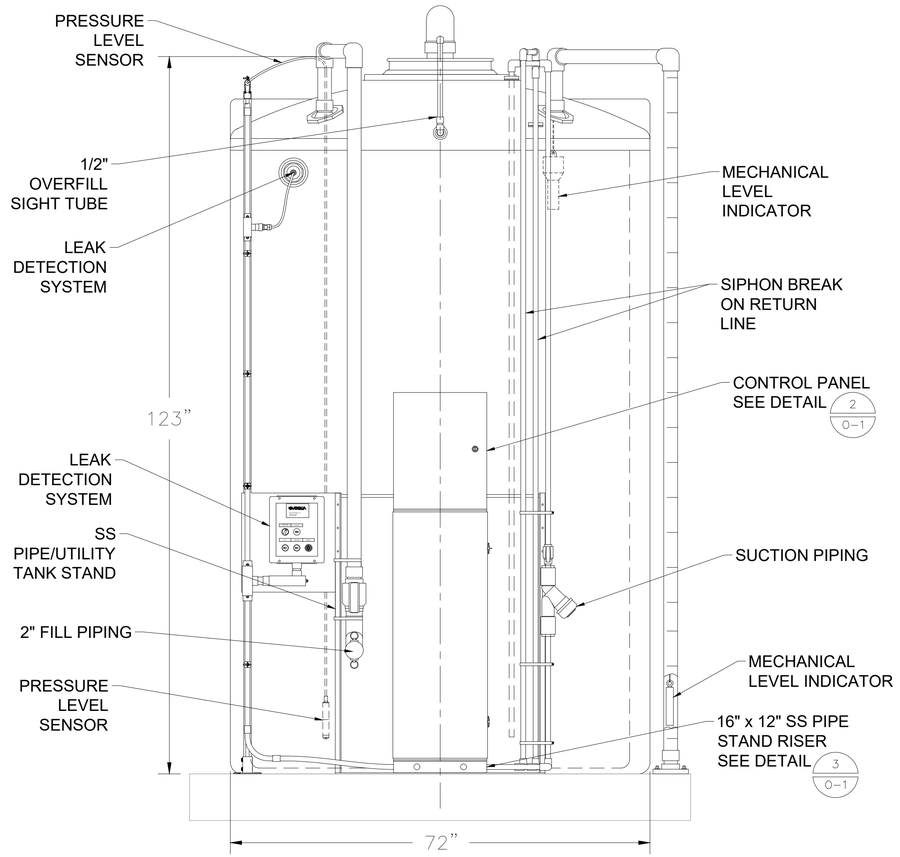

A / 0-1 CHEMICAL FEED TANK – SECTION VIEW

SCALE

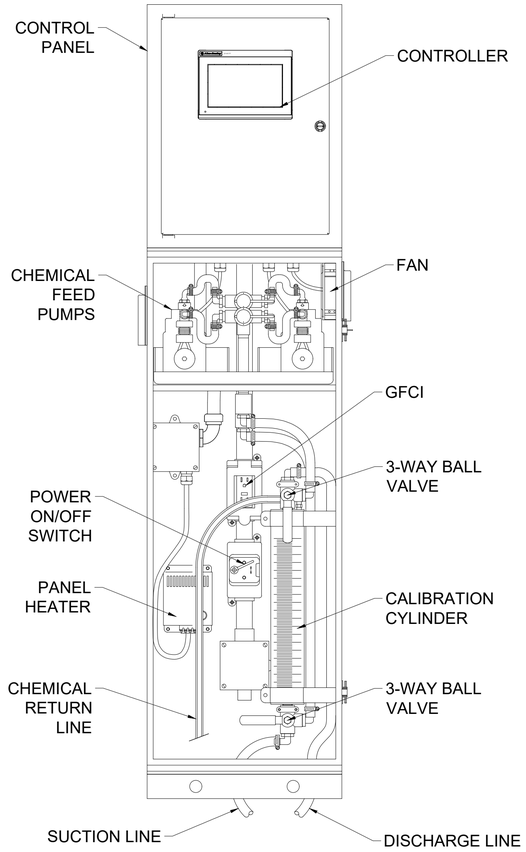

2 / 0-1 CHEMICAL FEED TANK CONTROL PANEL

NTS

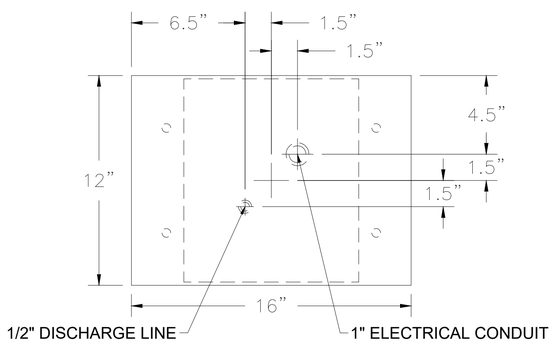

3 / 0-1 RISER/SLAB PENETRATION DETAIL

NTS

0' 1' 2' 3'

1" = 1'-0" (FULL)

NO.	DATE	REVISION	APP.

PAPE-DAWSON

2107 CITYWEST BLVD, 3RD FLR I HOUSTON, TX 77042 I 713.428.2400

TEXAS ENGINEERING FIRM #470 I TEXAS SURVEYING FIRM #10028800

V&A

V&A Consulting Engineers, Inc.
15720 Park Row, Suite 500
Houston, TX 77084 Tel. (713) 568-9067
F-9154
V&A Project No.: 22-0426

INTERIM REVIEW ONLY

Document incomplete: not intended for regulatory approval, permit, or construction.

JAMES VAUGHAN HARSHMAN
Engineer
15247
Registration Number
09/02/2025
Date

SURVEYED BY:
PAPE-DAWSON ENGINEERS
FB NO. 24-018

V&A CONSULTING ENGINEERS, INC.
Texas Registered Engineering Firm
F-9154

CITY OF HOUSTON

HOUSTON PUBLIC WORKS

LIFT STATION REHABILITATION AND RECONSTRUCTION
BEN'S BRANCH, WOODLAND RIDGE, ELMWOOD HILLS,
FOREST SHORES, TRAIL RIVER, RIVERLAWN

FOREST SHORES LIFT STATION
ODOR CONTROL SYSTEM
CHEMICAL FEED

WBS NUMBER	FOR CITY OF HOUSTON USE ONLY
R-000267-0180-3	
DRAWING SCALE	
AS NOTED	
CITY OF HOUSTON PM	
BRENDA JOHNSON P.E.	
SHEET NO. OF	

DWG No.
O-1

FILE PATH: E:\Projects\2022\0400 Thru 0499\22-0426 Var City Of Houston\500 Drawings\DESIGN\60%\60% Odor Sheets\07 Forest Shores\22-0426 Var City Of Houston Forest Shores Odor Control Detail.dwg

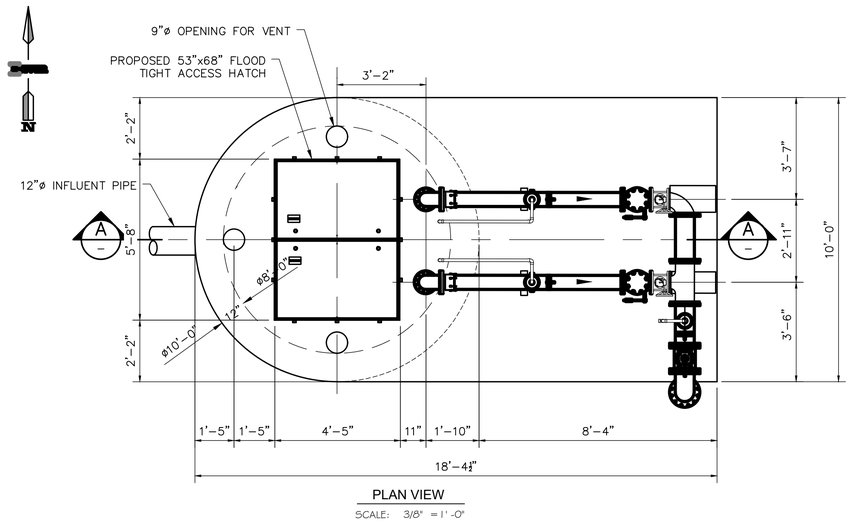

PLAN VIEW

SCALE: 3/8" = 1'-0"

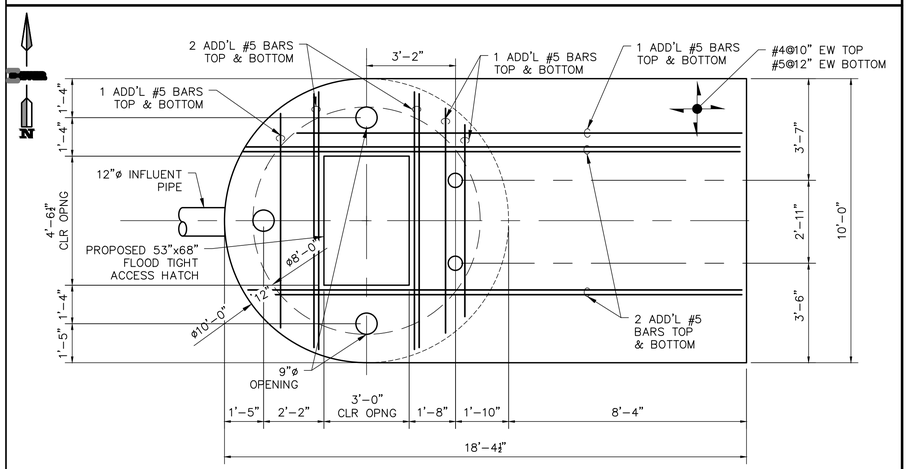

ADDITIONAL REINFORCING PLAN VIEW

SCALE: 3/8" = 1'-0"

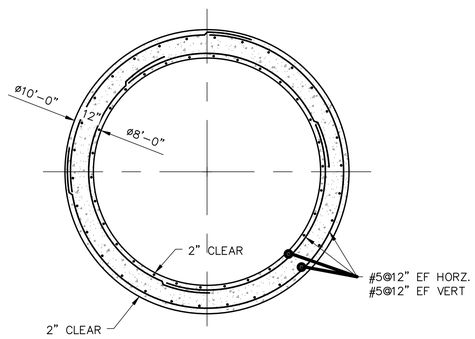

PLAN VIEW AT ELEV. 44.00

SCALE: 3/8" = 1'-0"

DEWATERING NOTE:

IF SAND, SILTY SAND OR SANDY SILT IS ENCOUNTERED BELOW THE GROUND WATER LEVEL, NOTIFY STIVER ENGINEERING. DEWATERING WILL BE REQUIRED.

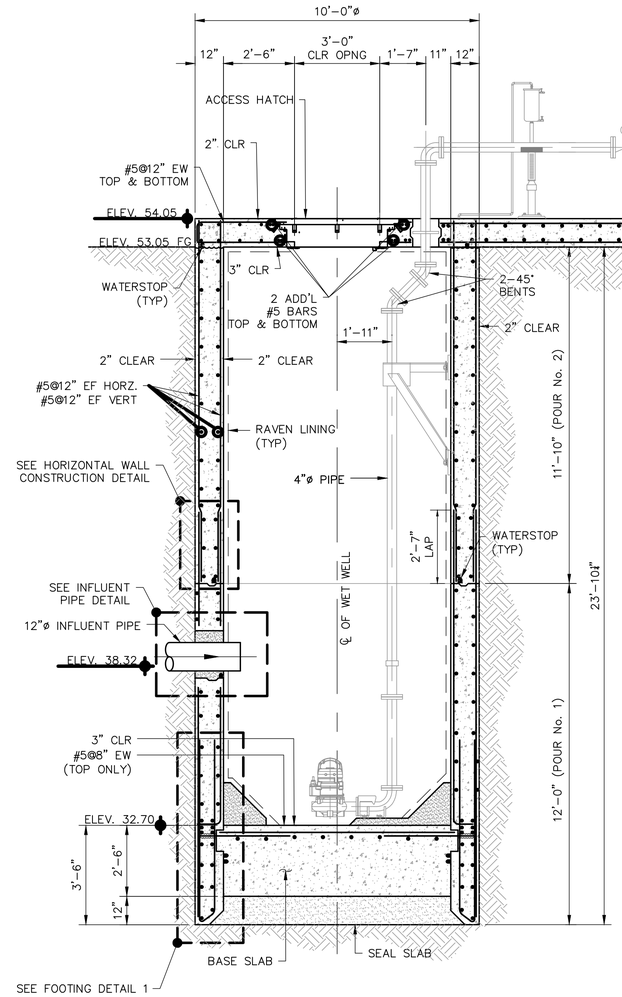

FS SECTION A

SCALE: 3/8" = 1'-0"

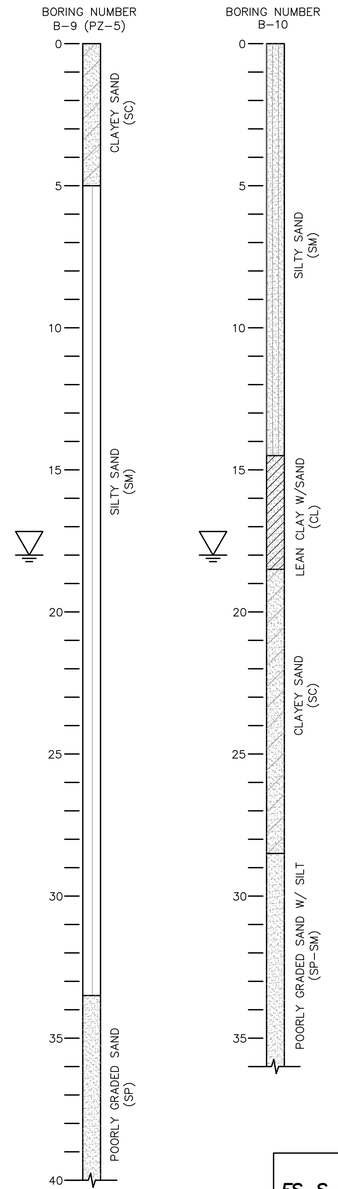

STIVER ENGINEERING
1305 Peden Street
Houston, Texas 77006
P (713) 526-3478
stivereng.com
TX Registration No. F-190

PAPE-DAWSON
2107 CITYWEST BLVD, 3RD FLR I HOUSTON, TX 77042 I 713 462 4200
TEXAS ENGINEERING FIRM #470 I TEXAS SURVEYING FIRM #10028800

FOR INTERIM
THIS DOCUMENT IS RELEASED FOR THE PURPOSE OF INTERIM REVIEW UNDER THE AUTHORITY OF JOHN M. STIVER
105179
10/16/25
THIS DOCUMENT IS NOT INTENDED FOR BIDDING, PERMITTING AND/OR CONSTRUCTION PURPOSES
REVIEW ONLY

SURVEYED BY:
PAPE-DAWSON ENGINEERS
FB NO. 24-018

CITY OF HOUSTON
HOUSTON PUBLIC WORKS

LIFT STATION REHABILITATION AND RECONSTRUCTION
BEN'S BRANCH, WOODLAND RIDGE, ELMWOOD HILLS, FOREST SHORES, TRAIL RIVER, RIVERLAWN

STRUCTURAL

FOREST SHORES
PLAN VIEW, ADD'L REINFORCING PLAN VIEW, PLAN VIEW AT ELEV. 44.00 AND SECTION A

WBS NUMBER	FOR CITY OF HOUSTON USE ONLY
R-000267-0180-3	
DRAWING SCALE	
CITY OF HOUSTON PM	
BRENDA JOHNSON P.E.	
SHEET NO. 260 OF	

FS-S-01

FILE PATH: F:\SE\PROJECTS\2023 Projects\23154.2-Pape-Dawson-Amir Shokouhi-COH LS Rehab For 6 Lift Stations Pkg 2-Phase II Design\CADD FILES\23154.2 CADD\Forest Shores LS\23154.2_LIFT STATION_FOREST SHORES.dwg

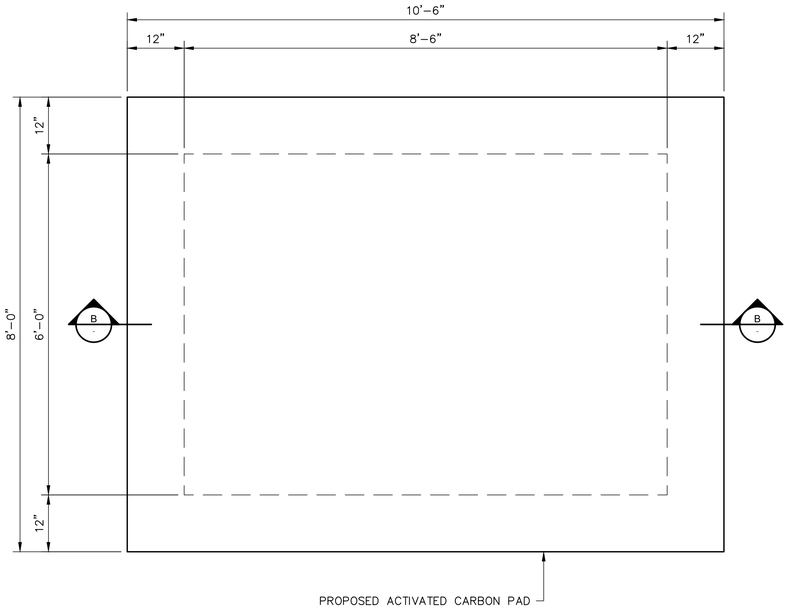

PLAN VIEW

SCALE: 3/4" = 1'-0"

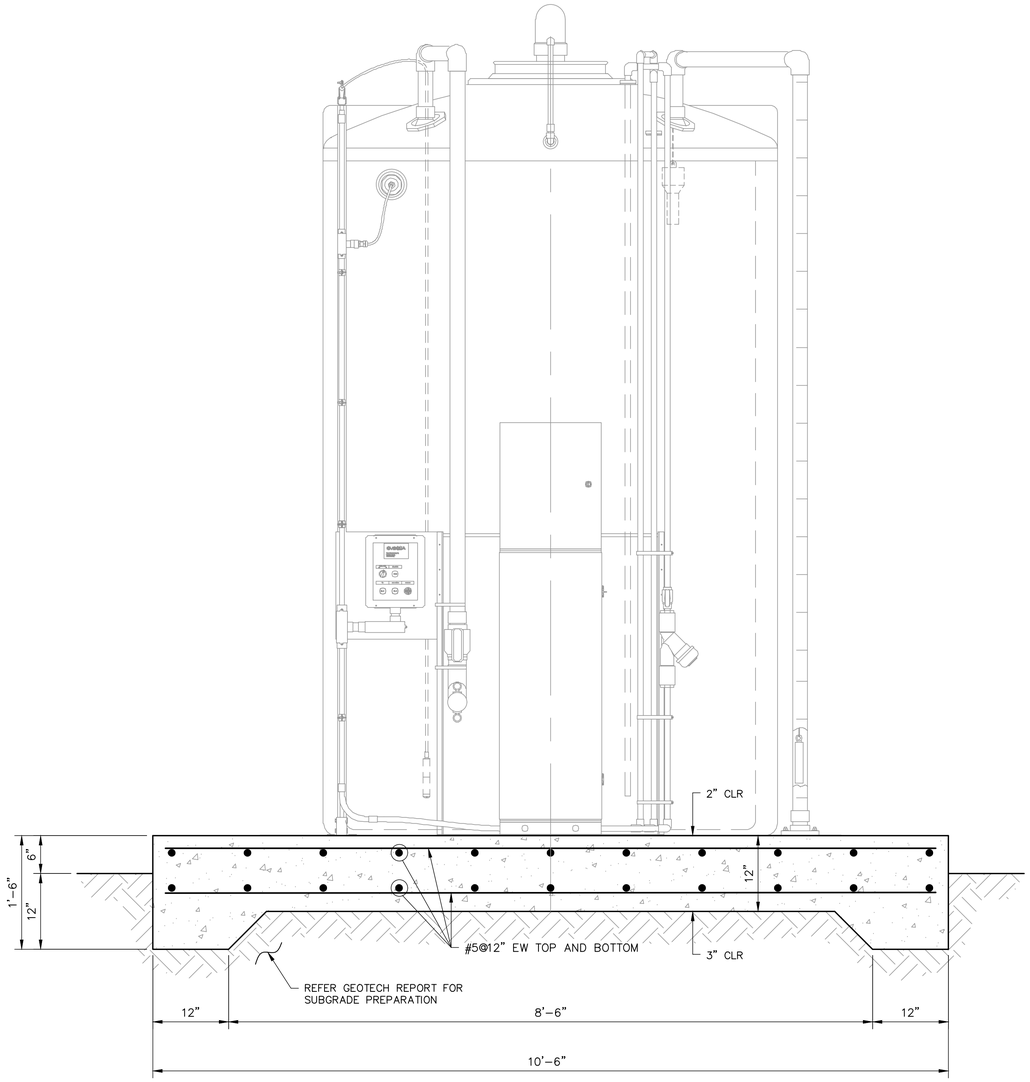

BB SECTION (B)

SCALE: 1" = 1'-0"

* PAD THICKNESS SUBJECT TO CHANGE, PENDING ANCHORAGE VERIFICATION

STIVER ENGINEERING
1305 Peden Street
Houston, Texas 77006
P (713) 526-3478
stivereng.com
TX Registration No. F-190

PAPE-DAWSON
2107 CITYWEST BLVD, 3RD FLR I HOUSTON, TX 77042 I 713.462.3178
TEXAS ENGINEERING FIRM #470 I TEXAS SURVEYING FIRM #10028800

SURVEYED BY:
PAPE-DAWSON ENGINEERS
FB NO. 24-018

FOR INTERIM
THIS DOCUMENT IS RELEASED FOR THE PURPOSE OF INTERIM REVIEW UNDER THE AUTHORITY OF JOHN M. STIVER 105179 10/16/25
THIS DOCUMENT IS NOT INTENDED FOR BIDDING, PERMITTING AND/OR CONSTRUCTION PURPOSES
REVIEW ONLY

CITY OF HOUSTON
HOUSTON PUBLIC WORKS

LIFT STATION REHABILITATION AND RECONSTRUCTION
BEN'S BRANCH, WOODLAND RIDGE, ELMWOOD HILLS,
FOREST SHORES, TRAIL RIVER, RIVERLAWN
STRUCTURAL

FOREST SHORES
CHEMICAL INJECTION PAD
PLAN VIEW AND SECTION B

WBS NUMBER	FOR CITY OF HOUSTON USE ONLY
R-000267-0180-3	
DRAWING SCALE	
CITY OF HOUSTON PM	
BRENDA JOHNSON P.E.	
SHEET NO. 261 OF	

FS-S-02

FILE PATH: F:\SE\PROJECTS\2023 Projects\23154.2-Pape-Dawson-Amir Shokouhi-COH LS Rehab For 6 Lift Stations Pkg 2-Phase II Design\CADD FILES\23154.2 CADD\Forest Shores LS\23154.2_LIFT STATION_FOREST SHORES.dwg

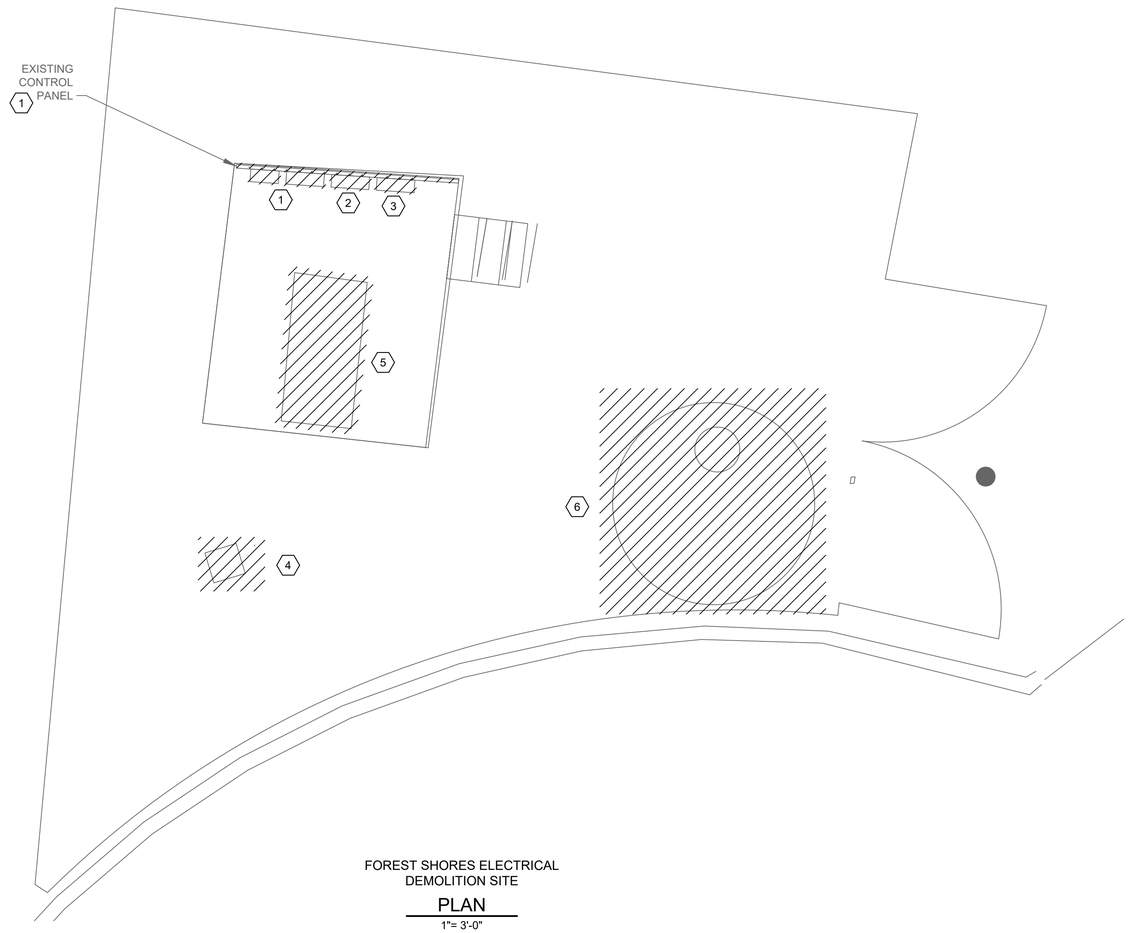

FOREST SHORES ELECTRICAL
DEMOLITION SITE

PLAN

1"= 3'-0"

NOTES BY SYMBOL <#>:

1. EXISTING METER, SERVICE DISCONNECT SWITCH, AND ATS TO BE DEMOLISHED AND REMOVED.
2. EXISTING PUMP CONTROL PANEL TO BE DEMOLISHED AND REMOVED.
3. EXISTING SCADA PANEL TO BE DEMOLISHED AND REMOVED.
4. EXISTING COMMUNICATION POLE TO BE DEMOLISHED AND REMOVED.
5. EXISTING NATURAL GAS GENERATOR TO BE DEMOLISHED AND REMOVED.
6. ALL EXISTING ELECTRICAL EQUIPMENT, DEVICES, COMPONENTS, AND THE ASSOCIATED WIRES AND CONDUITS IN THE UNDERGROUND DRY PIT TO BE DEMOLISHED AND REMOVED.

NO.	DATE	REVISION	APP.

SCALE: 1"= 3'

0' 3' 6' 9'

EXISTING LIFT
STATION DRY PIT

PHOTOGRAPH F
NTS -- 6

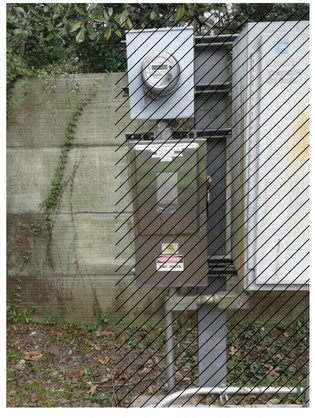

EXISTING METER, SERVICE
DISCONNECT SWITCH AND ATS

PHOTOGRAPH A
NTS -- 1

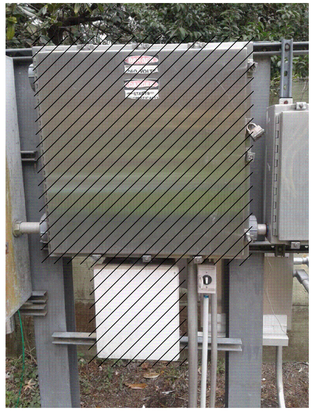

EXISTING PUMP
CONTROL PANEL

PHOTOGRAPH B
NTS -- 2

EXISTING SCADA
PANEL

PHOTOGRAPH C
NTS -- 3

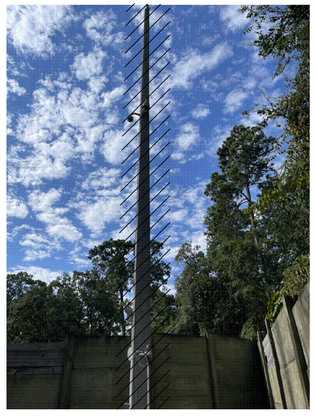

EXISTING COMMUNICATION
POLE

PHOTOGRAPH D
NTS -- 4

EXISTING NATURAL
GAS GENERATOR

PHOTOGRAPH E
NTS -- 5

NOTICE:
FOR YOUR SAFETY, YOU ARE REQUIRED BY TEXAS LAW TO CALL 811 AT LEAST 48 HOURS BEFORE YOU DIG SO THAT UNDERGROUND LINES CAN BE MARKED. THIS SIGNATURE DOES NOT FULFILL YOUR OBLIGATION TO CALL 811

VERIFICATION OF PRIVATE UTILITY LINES

Date

CenterPoint Energy natural gas utilities shown. (Gas service lines are not shown). This signature not be used for conflict verification.

Signature valid for six months.

Date

CenterPoint Energy/UNDERGROUND Electrical Facilities Verification ONLY. (This signature verifies existing underground facilities – not to be used for conflict verification)

Signature valid for six months.

Date

Approved for AT&T underground conduit facilities only.
Signature valid for one year.

PAPE–DAWSON
2107 CITYWEST BLVD, 3RD FLR I HOUSTON, TX 77042 I 713.428.2400
TEXAS ENGINEERING FIRM #470 I TEXAS SURVEYING FIRM #10028800

GAI
Gupta & Associates, Inc.
CONSULTING ENGINEERING
Registration No. F-2593
302 Dennis St.
Houston, Texas 77006
Tel: 713-636-2936
Fax: 713-636-2987
email: hforouzan@gaiconsulting.com

SURVEYED BY:
PAPE–DAWSON ENGINEERS
FB NO. 24–018

THIS DOCUMENT IS RELEASED FOR INTERIM REVIEW UNDER THE AUTHORIZATION OF HOSS FOROUZAN, P.E. (#77748) AND IS **NOT TO BE USED FOR CONSTRUCTION.**

CITY OF HOUSTON
HOUSTON PUBLIC WORKS

LIFT STATION REHABILITATION AND RECONSTRUCTION
BEN'S BRANCH, WOODLAND RIDGE, ELMWOOD HILLS, FOREST SHORES, TRAIL RIVER, RIVERLAWN

ELECTRICAL

FOREST SHORES LIFT STATION ELECTRICAL EXISTING SITE PLAN

WBS NUMBER	FOR CITY OF HOUSTON USE ONLY
R–000267–0180–3	
DRAWING SCALE	
AS NOTED	
CITY OF HOUSTON PM	
BRENDA JOHNSON P.E.	
SHEET NO. XX OF XX	

FS–E–01

FILE PATH: O:\H8107_Lift Station Rehabilitation And Reconstruction (Pape Dawson)\6 Drawings\Electrical\Working\Forest Shores\H8107_FS–E–01.dwg

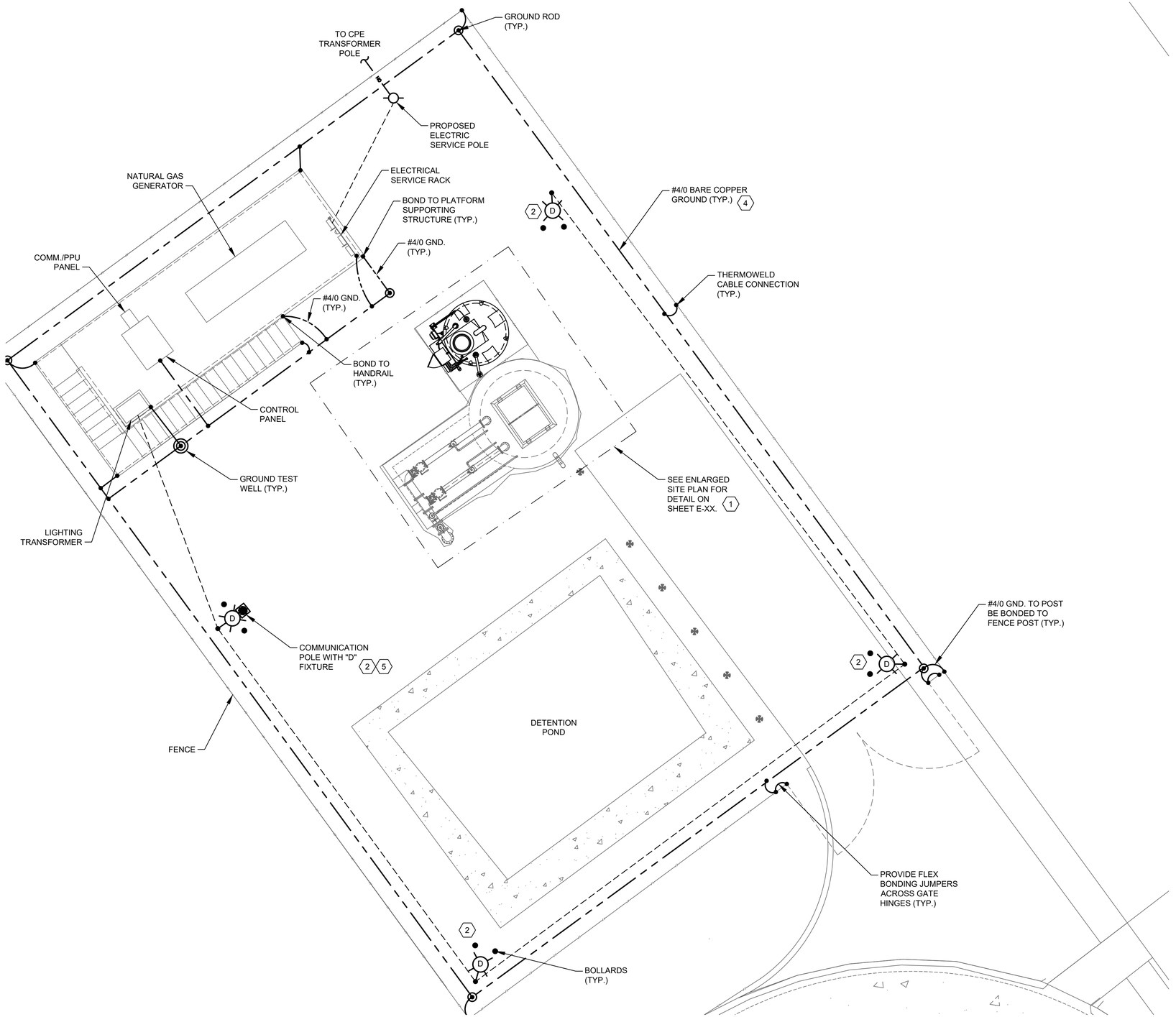

FOREST SHORES ELECTRICAL
PROPOSED SITE

PLAN

1"= 5'-0"

NOTES BY SYMBOL "⟨#⟩":

1. THE ELECTRICAL INSTALLATION IN THE WET WELL SHALL BE EXPLOSION PROOF, IN ACCORDANCE WITH THE NATIONAL ELECTRICAL CODE FOR CLASS I, DIVISION 1 LOCATIONS.
2. YARD LIGHT CONTROLLED BY LIGHTING SWITCH.
3. INSIDE WETWELL RATED NEMA CLASS 1, DIV. 1. OUTSIDE ABOVE GROUND, AROUND WETWELL RATED CLASS 1, DIV. 2 ACCORDING TO NFPA 820.
4. GROUNDING LOOP SHALL BE BURIED 30" BELOW FINISHED GRADE.
5. TYPE "B" FIXTURE TO BE INSTALLED ON THE POLE PROVIDING WIRES FOR THE "B" LIGHT.

NO.	DATE	REVISION	APP.

SCALE: 1"= 5'

0' 5' 10' 15'

NOTICE:
FOR YOUR SAFETY, YOU ARE REQUIRED BY TEXAS LAW TO CALL 811 AT LEAST 48 HOURS BEFORE YOU DIG SO THAT UNDERGROUND LINES CAN BE MARKED. THIS SIGNATURE DOES NOT FULFILL YOUR OBLIGATION TO CALL 811

VERIFICATION OF PRIVATE UTILITY LINES

Date

CenterPoint Energy natural gas utilities shown. (Gas service lines are not shown). This signature not be used for conflict verification.

Signature valid for six months.

Date

CenterPoint Energy/UNDERGROUND Electrical Facilities Verification ONLY. (This signature verifies existing underground facilities – not to be used for conflict verification)

Signature valid for six months.

Date

Approved for AT&T underground conduit facilities only.
Signature valid for one year.

PAPE–DAWSON
2107 CITYWEST BLVD, 3RD FLR I HOUSTON, TX 77042 I 713.428.2400
TEXAS ENGINEERING FIRM #470 I TEXAS SURVEYING FIRM #10028800

GAI
Gupta & Associates, Inc.
CONSULTING ENGINEERING
Registration No. F-2593
302 Dennis St.
Houston, Texas 77006
Tel: 713-636-2936
Fax: 713-636-2987
email: hforouzan@gaiconsulting.com

SURVEYED BY:
PAPE–DAWSON ENGINEERS
FB NO. 24–018

THIS DOCUMENT IS RELEASED FOR INTERIM REVIEW UNDER THE AUTHORIZATION OF HOSS FOROUZAN, P.E. (#77748) AND IS **NOT TO BE USED FOR CONSTRUCTION.**

CITY OF HOUSTON
HOUSTON PUBLIC WORKS

LIFT STATION REHABILITATION AND RECONSTRUCTION
BEN'S BRANCH, WOODLAND RIDGE, ELMWOOD HILLS, FOREST SHORES, TRAIL RIVER, RIVERLAWN

ELECTRICAL

FOREST SHORES LIFT STATION ELECTRICAL PROPOSED SITE PLAN

WBS NUMBER	FOR CITY OF HOUSTON USE ONLY
R–000267–0180–3	
DRAWING SCALE	
AS NOTED	
CITY OF HOUSTON PM	
BRENDA JOHNSON P.E.	
SHEET NO. XX OF XX	

FS–E–02

FILE PATH: O:\H8107_Lift Station Rehabilitation And Reconstruction (Pape Dawson)\6 Drawings\Electrical\Working\Forest Shores\H8107_FS–E–02.dwg

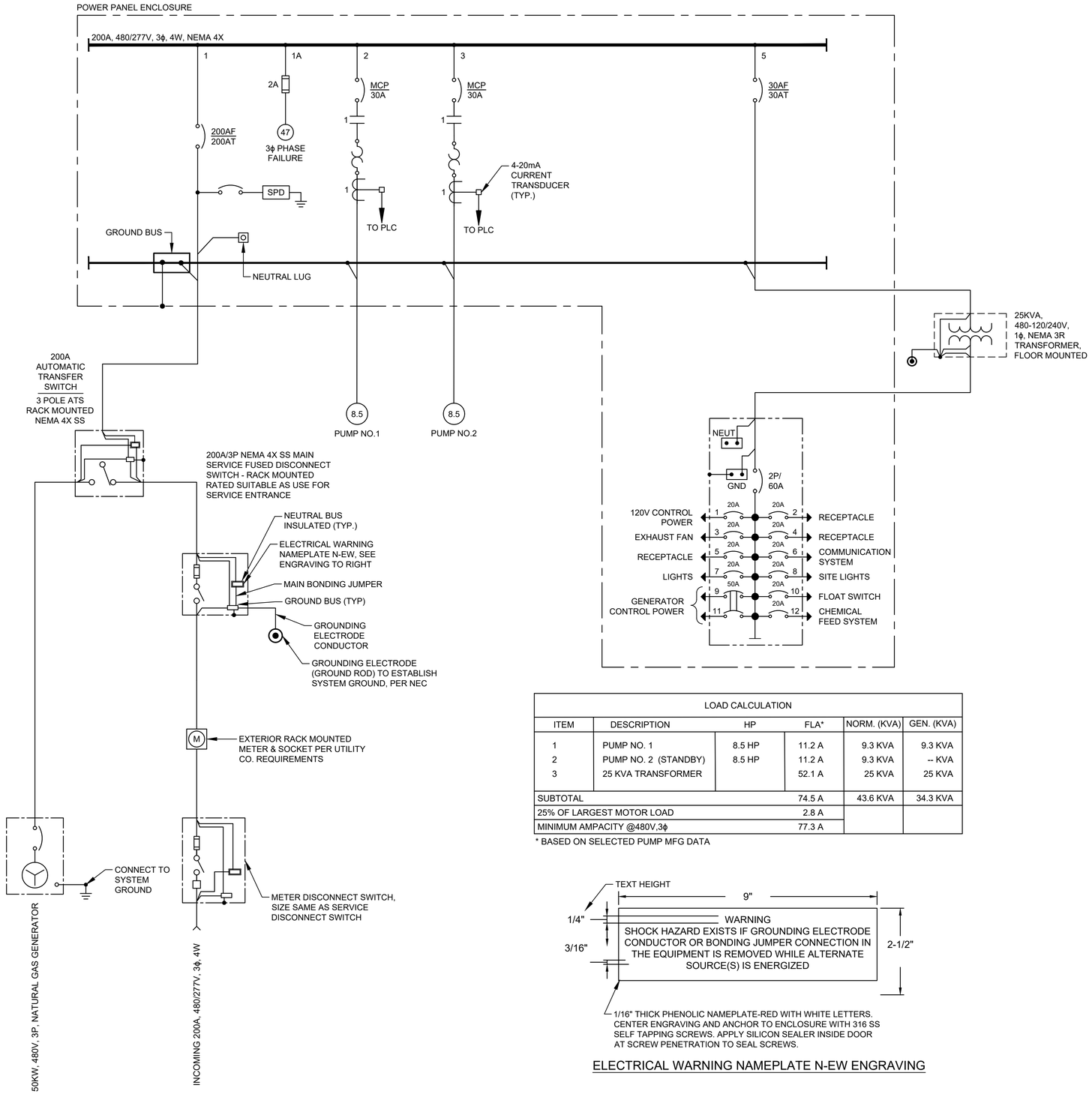

LOAD CALCULATION					
ITEM	DESCRIPTION	HP	FLA*	NORM. (KVA)	GEN. (KVA)
1	PUMP NO. 1	8.5 HP	11.2 A	9.3 KVA	9.3 KVA
2	PUMP NO. 2 (STANDBY)	8.5 HP	11.2 A	9.3 KVA	-- KVA
3	25 KVA TRANSFORMER		52.1 A	25 KVA	25 KVA
SUBTOTAL			74.5 A	43.6 KVA	34.3 KVA
25% OF LARGEST MOTOR LOAD			2.8 A		
MINIMUM AMPACITY @480V,3ϕ			77.3 A		

* BASED ON SELECTED PUMP MFG DATA

1/16" THICK PHENOLIC NAMEPLATE-RED WITH WHITE LETTERS. CENTER ENGRAVING AND ANCHOR TO ENCLOSURE WITH 316 SS SELF TAPPING SCREWS. APPLY SILICON SEALER INSIDE DOOR AT SCREW PENETRATION TO SEAL SCREWS.

ELECTRICAL WARNING NAMEPLATE N-EW ENGRAVING

NO.	DATE	REVISION	APP.

NOTICE:
FOR YOUR SAFETY, YOU ARE REQUIRED BY TEXAS LAW TO CALL 811 AT LEAST 48 HOURS BEFORE YOU DIG SO THAT UNDERGROUND LINES CAN BE MARKED. THIS SIGNATURE DOES NOT FULFILL YOUR OBLIGATION TO CALL 811

VERIFICATION OF PRIVATE UTILITY LINES

Date

CenterPoint Energy natural gas utilities shown. (Gas service lines are not shown). This signature not be used for conflict verification.

Signature valid for six months.

Date

CenterPoint Energy/UNDERGROUND Electrical Facilities Verification ONLY. (This signature verifies existing underground facilities – not to be used for conflict verification)

Signature valid for six months.

Date

Approved for AT&T underground conduit facilities only.
Signature valid for one year.

PAPE–DAWSON
2107 CITYWEST BLVD, 3RD FLR I HOUSTON, TX 77042 I 713.428.2400
TEXAS ENGINEERING FIRM #470 I TEXAS SURVEYING FIRM #10028800

GAI
Gupta & Associates, Inc.
CONSULTING ENGINEERING
Registration No. F-2593
302 Dennis St.
Houston, Texas 77006
Tel: 713-636-2936
Fax: 713-636-2987
email: hforouzan@gaiconsulting.com

THIS DOCUMENT IS RELEASED FOR INTERIM REVIEW UNDER THE AUTHORIZATION OF HOSS FOROUZAN, P.E. (#77748) AND IS **NOT TO BE USED FOR CONSTRUCTION.**

SURVEYED BY:
PAPE–DAWSON ENGINEERS
FB NO. 24–018

CITY OF HOUSTON
HOUSTON PUBLIC WORKS

LIFT STATION REHABILITATION AND RECONSTRUCTION
BEN'S BRANCH, WOODLAND RIDGE, ELMWOOD HILLS, FOREST SHORES, TRAIL RIVER, RIVERLAWN

ELECTRICAL

FOREST SHORES LIFT STATION ELECTRICAL ONE–LINE DIAGRAM

WBS NUMBER	FOR CITY OF HOUSTON USE ONLY
R–000267–0180–3	
DRAWING SCALE	
AS NOTED	
CITY OF HOUSTON PM	
BRENDA JOHNSON P.E.	
SHEET NO. XX OF XX	

FS–E–03

FILE PATH: O:\H8107_Lift Station Rehabilitation And Reconstruction (Pape Dawson)\6 Drawings\Electrical\Working\Forest Shores\H8107_FS–E–03.dwg

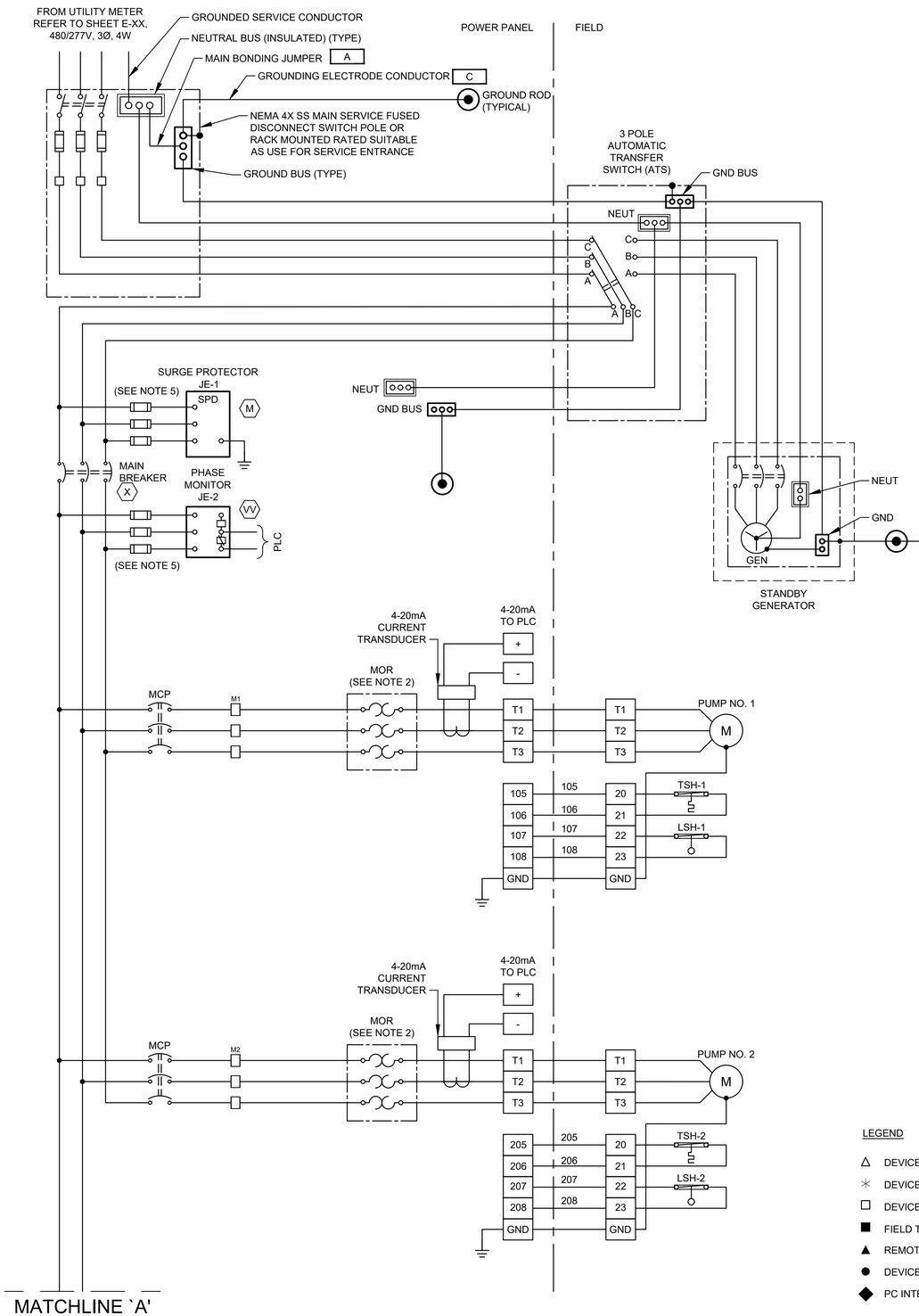

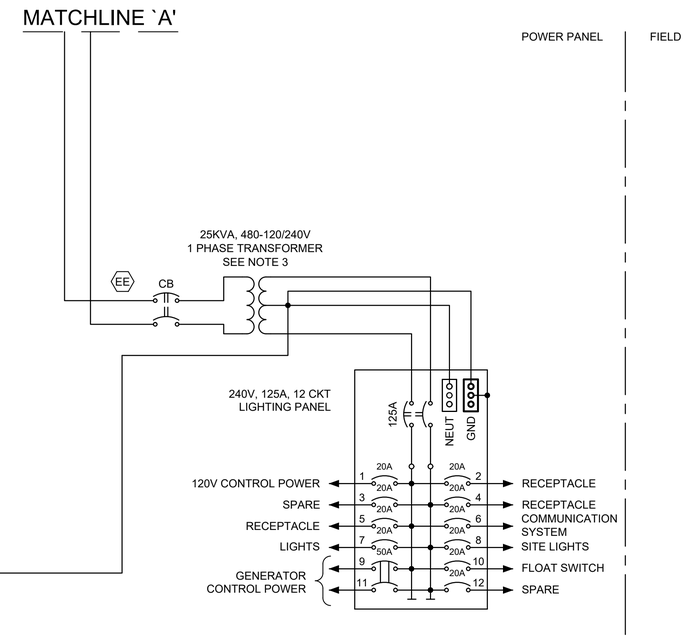

NOTES:

1. UNLESS OTHERWISE INDICATE, ALL DEVICES WITHOUT FURTHER DESIGNATION ARE LOCATED AT THE CONTROL PANEL.
2. THE COMBINATION OF CT AND MOTOR OVERLOAD RELAY IF REQUIRED.
3. CONTRACTOR TO REVISE DWG. BASED ON MANUFACTURE AND SIZE.
4. CONTRACTOR SHALL TERMINATE POWER & CONTROL WIRES PER MANUFACTURER'S REQUIREMENTS.
5. PROVIDE FUSE SIZE ACCORDING TO MANUFACTURER'S REQUIREMENTS.

LEGEND

- △ DEVICE OR FIELD TERMINAL LOCATED AT MOTOR
- ✳ DEVICE OR FIELD TERMINAL LOCATED REMOTE
- □ DEVICE OR FIELD TERMINAL LOCATED AT POWER PANEL
- ■ FIELD TERMINAL LOCATED AT CONTROL PANEL
- ▲ REMOTE TERMINAL
- ● DEVICE TERMINAL NO.
- ◆ PC INTERFACE TERMINAL

NO.	DATE	REVISION	APP.

NOTICE:
FOR YOUR SAFETY, YOU ARE REQUIRED BY TEXAS LAW TO CALL 811 AT LEAST 48 HOURS BEFORE YOU DIG SO THAT UNDERGROUND LINES CAN BE MARKED. THIS SIGNATURE DOES NOT FULFILL YOUR OBLIGATION TO CALL 811

VERIFICATION OF PRIVATE UTILITY LINES

Date

CenterPoint Energy natural gas utilities shown. (Gas service lines are not shown). This signature not be used for conflict verification.

Signature valid for six months.

Date

CenterPoint Energy/UNDERGROUND Electrical Facilities Verification ONLY. (This signature verifies existing underground facilities – not to be used for conflict verification)

Signature valid for six months.

Date

Approved for AT&T underground conduit facilities only.
Signature valid for one year.

PAPE–DAWSON
2107 CITYWEST BLVD, 3RD FLR I HOUSTON, TX 77042 I 713.428.2400
TEXAS ENGINEERING FIRM #470 I TEXAS SURVEYING FIRM #10028800

GAI
Gupta & Associates, Inc.
CONSULTING ENGINEERING
Registration No. F-2593
302 Dennis St.
Houston, Texas 77006
Tel: 713-636-2936
Fax: 713-636-2987
email: hforouzan@gaiconsulting.com

THIS DOCUMENT IS RELEASED FOR INTERIM REVIEW UNDER THE AUTHORIZATION OF HOSS FOROUZAN, P.E. (#77748) AND IS **NOT TO BE USED FOR CONSTRUCTION.**

SURVEYED BY:
PAPE–DAWSON ENGINEERS
FB NO. 24–018

CITY OF HOUSTON
HOUSTON PUBLIC WORKS

LIFT STATION REHABILITATION AND RECONSTRUCTION
BEN'S BRANCH, WOODLAND RIDGE, ELMWOOD HILLS, FOREST SHORES, TRAIL RIVER, RIVERLAWN

ELECTRICAL

FOREST SHORES LIFT STATION ELECTRICAL THREE LINE DIAGRAM

WBS NUMBER	FOR CITY OF HOUSTON USE ONLY
R–000267–0180–3	
DRAWING SCALE	
AS NOTED	
CITY OF HOUSTON PM	
BRENDA JOHNSON P.E.	
SHEET NO. XX OF XX	

FS–E–04

FILE PATH: O:\H8107_Lift Station Rehabilitation And Reconstruction (Pape Dawson)\6 Drawings\Electrical\Working\Forest Shores\H8107_FS–E–04.dwg

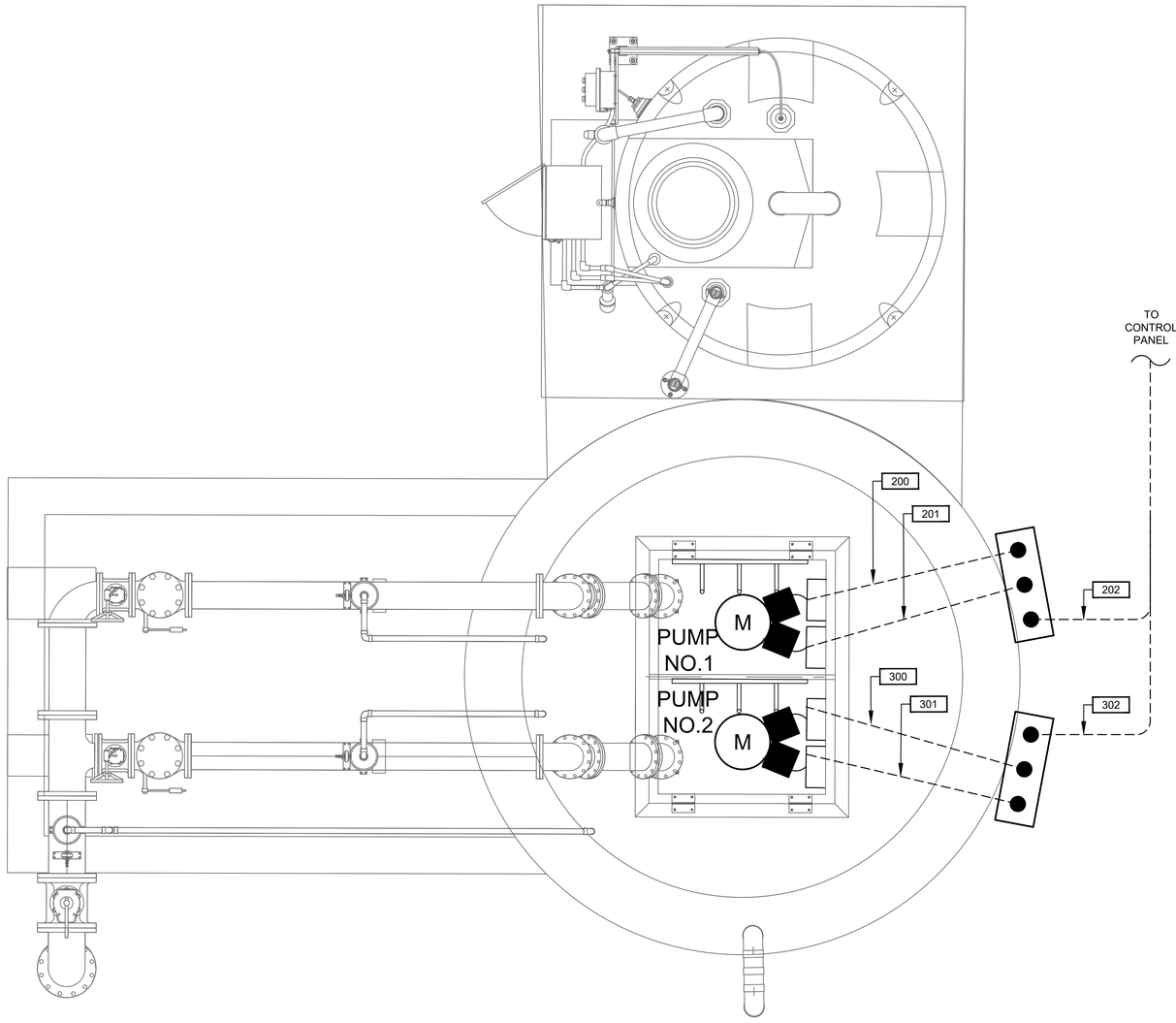

FOREST SHORES LIFT STATION
ENLARGED PLAN

PLAN

3/4"=1'-0"

NO.	DATE	REVISION	APP.

6" 0 1 2

SCALE: 3/4" = 1'-0"

NOTICE:

FOR YOUR SAFETY, YOU ARE REQUIRED BY TEXAS LAW TO CALL 811 AT LEAST 48 HOURS BEFORE YOU DIG SO THAT UNDERGROUND LINES CAN BE MARKED. THIS SIGNATURE DOES NOT FULFILL YOUR OBLIGATION TO CALL 811

VERIFICATION OF PRIVATE UTILITY LINES

Date

CenterPoint Energy natural gas utilities shown. (Gas service lines are not shown). This signature not be used for conflict verification.

Signature valid for six months.

Date

CenterPoint Energy/UNDERGROUND Electrical Facilities Verification ONLY. (This signature verifies existing underground facilities – not to be used for conflict verification)

Signature valid for six months.

Date

Approved for AT&T underground conduit facilities only.
Signature valid for one year.

PAPE–DAWSON

2107 CITYWEST BLVD, 3RD FLR I HOUSTON, TX 77042 I 713.428.2400

TEXAS ENGINEERING FIRM #470 I TEXAS SURVEYING FIRM #10028800

GAI
Gupta & Associates, Inc.
CONSULTING ENGINEERING
Registration No. F-2593
302 Dennis St.
Houston, Texas 77006
Tel: 713-636-2936
Fax: 713-636-2987
email: hforouzan@gaiconsulting.com

THIS DOCUMENT IS RELEASED FOR INTERIM REVIEW UNDER THE AUTHORIZATION OF HOSS FOROUZAN, P.E. (#77748) AND IS **NOT TO BE USED FOR CONSTRUCTION.**

SURVEYED BY:
PAPE–DAWSON ENGINEERS
FB NO. 24–018

CITY OF HOUSTON

HOUSTON PUBLIC WORKS

LIFT STATION REHABILITATION AND RECONSTRUCTION
BEN'S BRANCH, WOODLAND RIDGE, ELMWOOD HILLS,
FOREST SHORES, TRAIL RIVER, RIVERLAWN

ELECTRICAL

FOREST SHORES LIFT STATION ELECTRICAL ENLARGED LIFT STATION PLAN

WBS NUMBER	FOR CITY OF HOUSTON USE ONLY
R–000267–0180–3	
DRAWING SCALE	
AS NOTED	
CITY OF HOUSTON PM	
BRENDA JOHNSON P.E.	
SHEET NO. XX OF XX	

FS–E–05

FILE PATH: O:\H8107_Lift Station Rehabilitation And Reconstruction (Pape Dawson)\6 Drawings\Electrical\Working\Forest Shores\H8107_FS–E–05.dwg

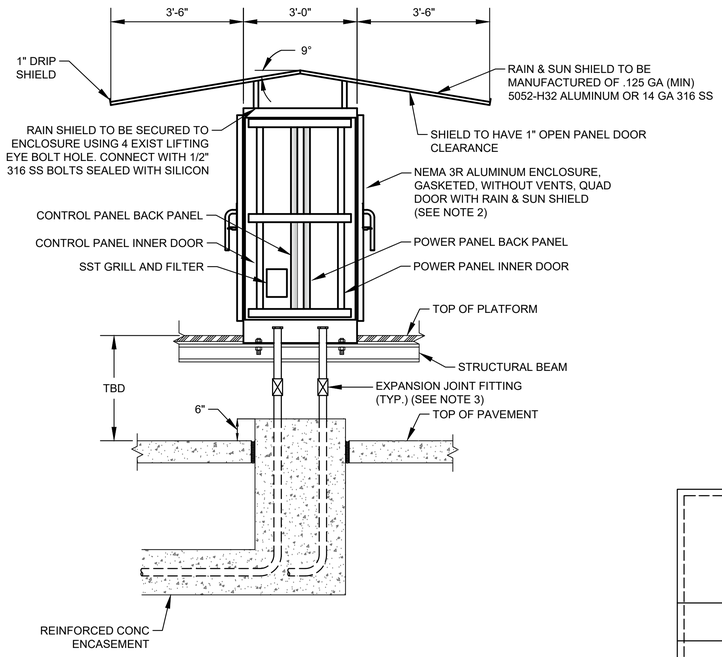

CONTROL CABINET ENCLOSURE WITH PLATFORM

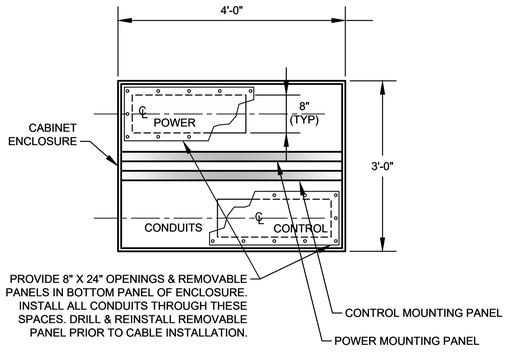

SECTION 2
NTS

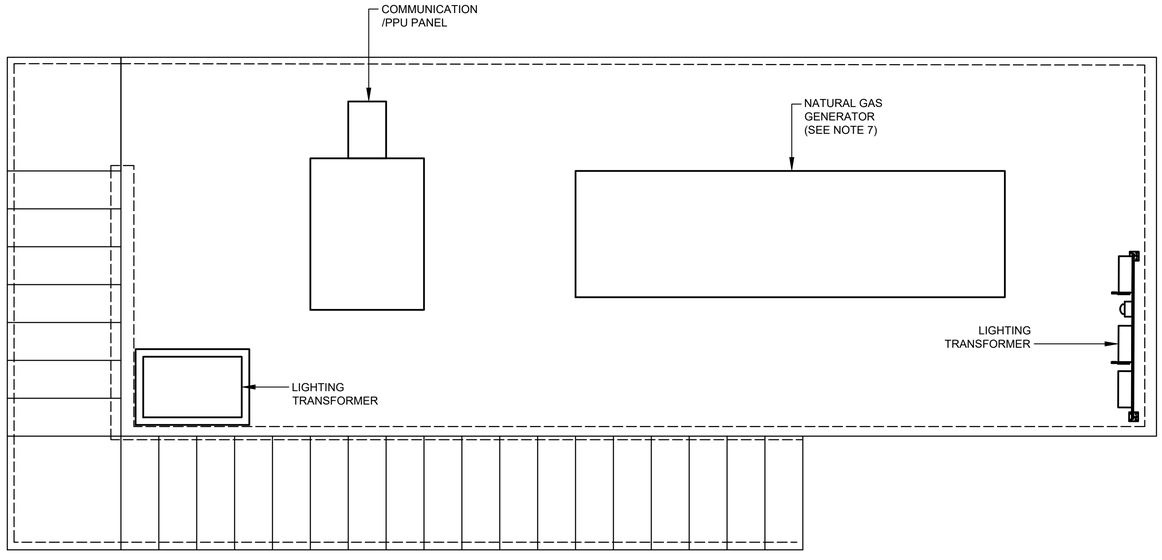

GENERATOR ON ELEVATED PLATFORM DETAIL

DETAIL 3
1/2" = 1'-0"

NOTES:

1. SEE SHEET FS-I-04 FOR EQUIPMENT SCHEDULE.
2. REFER TO SPEC 13325-8 FOR PANEL DIMENSIONS.
3. EXPANSION JOINT FITTINGS AS REQUIRED.
4. REFER TO SERVICE RACK FOR DETAIL.
5. REFER TO STRUCTURAL DRAWINGS .
6. CONDUIT TO BE MOUNTED BELOW PLATFORM GRATING.
7. GENERATOR IS FOR EMERGENCY USE ONLY.

NO.	DATE	REVISION	APP.

NOTICE:
FOR YOUR SAFETY, YOU ARE REQUIRED BY TEXAS LAW TO CALL 811 AT LEAST 48 HOURS BEFORE YOU DIG SO THAT UNDERGROUND LINES CAN BE MARKED. THIS SIGNATURE DOES NOT FULFILL YOUR OBLIGATION TO CALL 811

VERIFICATION OF PRIVATE UTILITY LINES

Date

CenterPoint Energy natural gas utilities shown. (Gas service lines are not shown). This signature not be used for conflict verification.

Signature valid for six months.

Date

CenterPoint Energy/UNDERGROUND Electrical Facilities Verification ONLY. (This signature verifies existing underground facilities – not to be used for conflict verification)

Signature valid for six months.

Date

Approved for AT&T underground conduit facilities only.
Signature valid for one year.

PAPE–DAWSON
2107 CITYWEST BLVD, 3RD FLR I HOUSTON, TX 77042 I 713.428.2400
TEXAS ENGINEERING FIRM #470 I TEXAS SURVEYING FIRM #10028800

GAI
Gupta & Associates, Inc.
CONSULTING ENGINEERING
Registration No. F-2593
302 Dennis St.
Houston, Texas 77006
Tel: 713-636-2936
Fax: 713-636-2987
email: hforouzan@gaiconsulting.com

SURVEYED BY:
PAPE–DAWSON ENGINEERS
FB NO. 24–018

THIS DOCUMENT IS RELEASED FOR INTERIM REVIEW UNDER THE AUTHORIZATION OF HOSS FOROUZAN, P.E. (#77748) AND IS **NOT TO BE USED FOR CONSTRUCTION.**

CITY OF HOUSTON
HOUSTON PUBLIC WORKS

LIFT STATION REHABILITATION AND RECONSTRUCTION
BEN'S BRANCH, WOODLAND RIDGE, ELMWOOD HILLS, FOREST SHORES, TRAIL RIVER, RIVERLAWN

ELECTRICAL

FOREST SHORES LIFT STATION CONTROL CABINET ENCLOSURE DETAIL

WBS NUMBER	FOR CITY OF HOUSTON USE ONLY
R–000267–0180–3	
DRAWING SCALE	
AS NOTED	
CITY OF HOUSTON PM	
BRENDA JOHNSON P.E.	
SHEET NO. XX OF XX	

FS–E–06

FILE PATH: O:\H8107_Lift Station Rehabilitation And Reconstruction (Pape Dawson)\6 Drawings\Electrical\Working\Forest Shores\H8107_FS–E–06.dwg

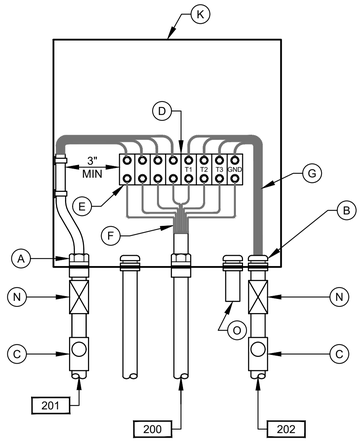

PUMP NO.1
JUNCTION BOX

DETAIL 3
NTS
(SEE NOTE 7)

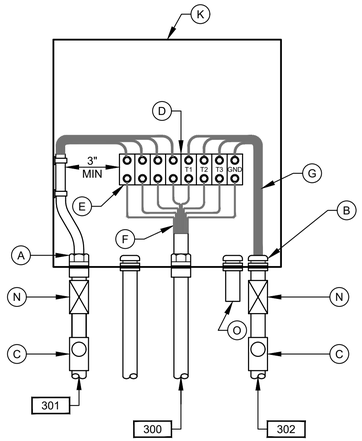

PUMP NO.2
JUNCTION BOX

DETAIL 4
NTS
(SEE NOTE 7)

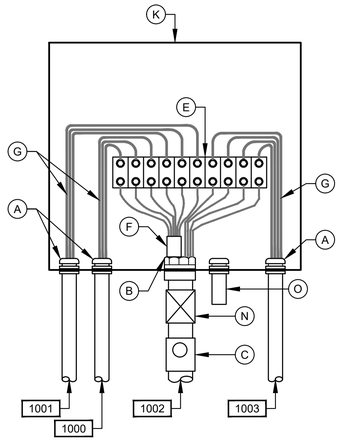

LEVEL TRANSMITTER
JUNCTION BOX

DETAIL 5
NTS
(SEE NOTE 7)

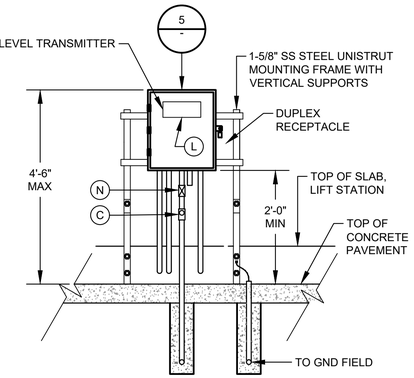

DETAIL 6
NTS
(SEE NOTE 9 & 12)

NOTES:

1. NAMEPLATES SHALL BE MOUNTED TO JUNCTION BOXES USING 316 STAINLESS STEEL HARDWARE.
2. MAINTAIN MINIMUM SEPARATION REQUIRED UNDER NEC ARTICLE 504, BETWEEN INTRINSICALLY SAFE CONTROL WIRING AND NON INTRINSICALLY SAFE MOTOR FEEDER WIRING.
3. UNLESS OTHERWISE NOTED, ALL EXTERIOR EXPOSED CONDUITS SHALL BE PVC COATED ALUMINUM.
4. UNLESS OTHERWISE NOTED, ALL NUTS, BOLTS, SCREWS WASHERS, ETC SHALL BE TYPE 316 STAINLESS STEEL.
5. ALL UNDERGROUND CONDUITS TO BE ENCASED IN REINFORCED CONCRETE DUCTBANK.
6. PROVIDE ANTI-CORROSIVE SPRAY ON ANY BARE METAL PARTS OR EXPOSED WIRE.
7. SEE WIRING SCHEMATICS FOR TERMINALS AND WIRE NUMBERS.
8. ANY CONDUIT REQUIRING A CSBE SEAL, SHALL BE A MINIMUM SIZE OF 2 1/2" PER CABLE.
9. DETAIL SHOWN MAY BE MODIFIED PER SITE SITUATION.
10. COORDINATE WITH WASTE WATER OPERATIONS ELECTRICAL ORGANIZATION FOR THE OPENING OF JUNCTION BOXES TO THE SIDE OF WET WELL IF REQUIRED DURING CONSTRUCTION.
11. THE ENCLOSURES WITH ELECTRICAL CIRCUITS SHALL BE A MINIMUM OF 5 FEET FROM ANY CLASSIFIED AREA, OTHERWISE EXPLOSION PROOF TYPE ENCLOSURES SHALL BE USED.

NO.	DATE	REVISION	APP.

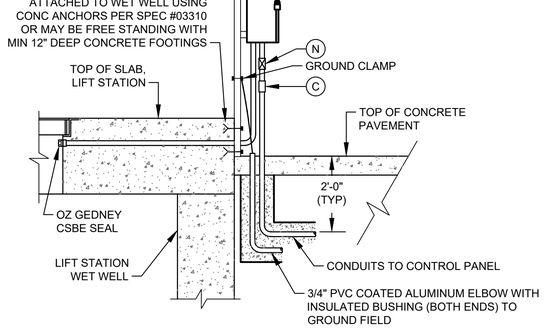

TYP SIDE VIEW FOR DETAIL 1, 2, & 6

(SEE NOTE 10)

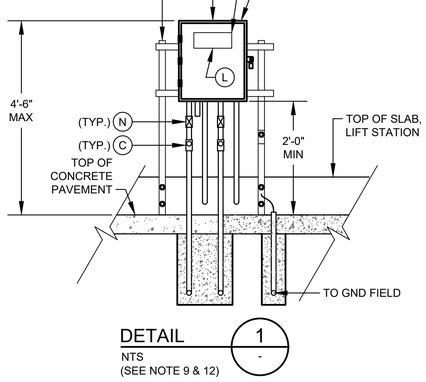

DETAIL 1
NTS
(SEE NOTE 9 & 12)

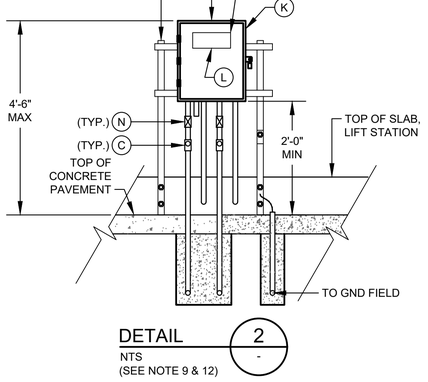

DETAIL 2
NTS
(SEE NOTE 9 & 12)

JUNCTION BOX EQUIPMENT SCHEDULE

- A - OZ GEDNEY CSBE SEAL
- B - WATERTIGHT CONDUIT HUB WITH INSULATED BUSHING
- C - CLASS I, DIV 1, EXPLOSION PROOF SEAL INSTALLED PER NEC DIV 501
- D - POWER TERMINAL BLOCK W/SCREW DOWN BOX LUGS
- E - CONTROL TERM BLOCK W/SCREW DOWN BOX LUGS
- F - MULTI-CONDUCTOR CABLE, REMOVE OUTER JACKET AS SHOWN
- G - WIRING AS SCHEDULED
- H - NOT USED.
- I - NOT USED.
- J - NOT USED
- K - NEMA 6P STAINLESS STEEL JUNCTION BOX WITH GASKETED FRONT COVER, SINGLE QUARTER TURN, OIL-TIGHT LATCH AND PADLOCKING PROVISIONS, MINIMUM SIZE: 12"W X 16"H X 6"D
- L - NAMEPLATE, SEE SPECIFICATIONES (SEE NAMEPLATE SCHEDULE)
- M - NOT USED.
- N - EXPANSION FITTING
- O - DRAIN VENT

NOTICE:
FOR YOUR SAFETY, YOU ARE REQUIRED BY TEXAS LAW TO CALL 811 AT LEAST 48 HOURS BEFORE YOU DIG SO THAT UNDERGROUND LINES CAN BE MARKED. THIS SIGNATURE DOES NOT FULFILL YOUR OBLIGATION TO CALL 811

VERIFICATION OF PRIVATE UTILITY LINES

Date

CenterPoint Energy natural gas utilities shown. (Gas service lines are not shown). This signature not be used for conflict verification.

Signature valid for six months.

Date

CenterPoint Energy/UNDERGROUND Electrical Facilities Verification ONLY. (This signature verifies existing underground facilities – not to be used for conflict verification)

Signature valid for six months.

Date

Approved for AT&T underground conduit facilities only.
Signature valid for one year.

PAPE–DAWSON
2107 CITYWEST BLVD, 3RD FLR I HOUSTON, TX 77042 I 713.428.2400
TEXAS ENGINEERING FIRM #470 I TEXAS SURVEYING FIRM #10028800

GAI
Gupta & Associates, Inc.
CONSULTING ENGINEERING
Registration No. F-2593
302 Dennis St.
Houston, Texas 77006
Tel: 713-636-2936
Fax: 713-636-2987
email: hforouzan@gaiconsulting.com

SURVEYED BY:
PAPE–DAWSON ENGINEERS
FB NO. 24–018

THIS DOCUMENT IS RELEASED FOR INTERIM REVIEW UNDER THE AUTHORIZATION OF HOSS FOROUZAN, P.E. (#77748) AND IS **NOT TO BE USED FOR CONSTRUCTION.**

CITY OF HOUSTON
HOUSTON PUBLIC WORKS

LIFT STATION REHABILITATION AND RECONSTRUCTION
BEN'S BRANCH, WOODLAND RIDGE, ELMWOOD HILLS, FOREST SHORES, TRAIL RIVER, RIVERLAWN

ELECTRICAL

FOREST SHORES LIFT STATION TYPICAL JUNCTION BOX DETAILS

WBS NUMBER	FOR CITY OF HOUSTON USE ONLY
R–000267–0180–3	
DRAWING SCALE	
AS NOTED	
CITY OF HOUSTON PM	
BRENDA JOHNSON P.E.	
SHEET NO. XX OF XX	

FS–E–07

FILE PATH: O:\H8107_Lift Station Rehabilitation And Reconstruction (Pape Dawson)\6 Drawings\Electrical\Working\Forest Shores\H8107_FS–E–07.dwg

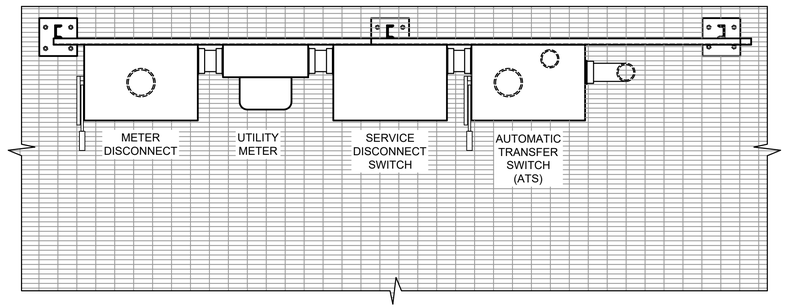

PLAN

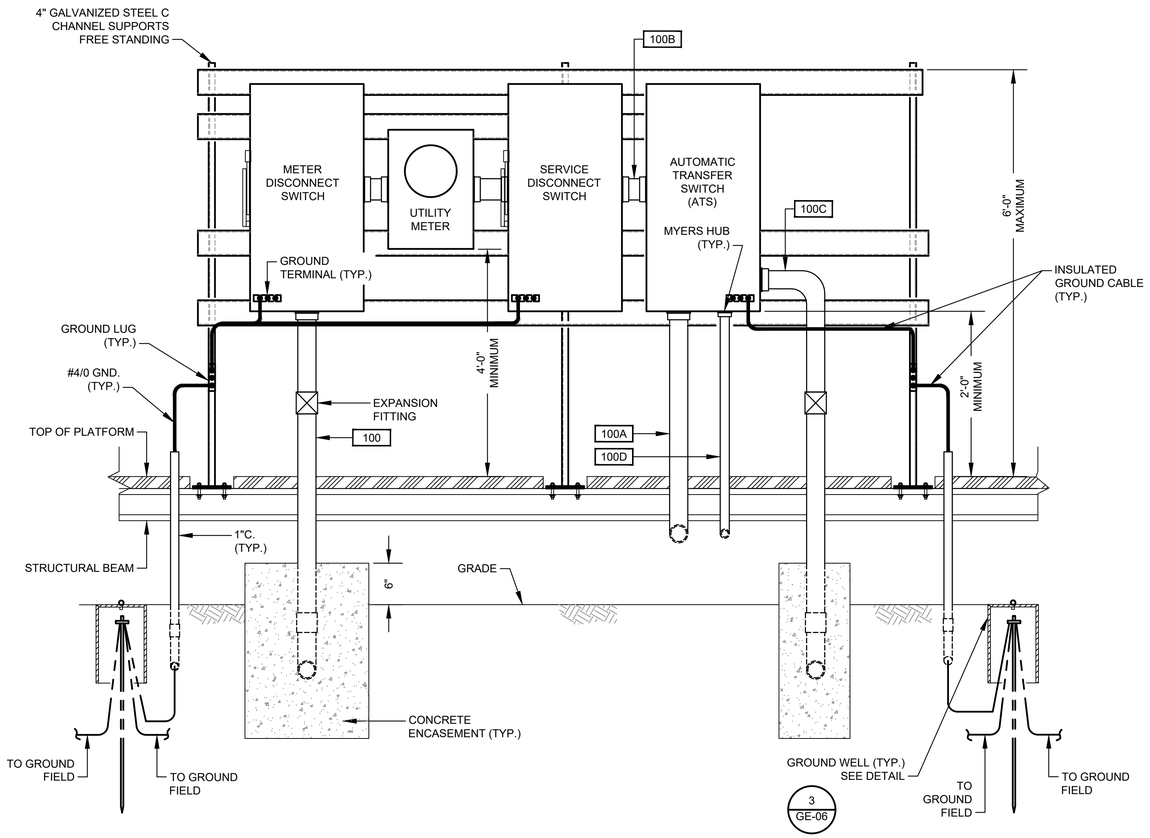

SERVICE MOUNTING RACK

DETAIL 1
NTS. -

NO.	DATE	REVISION	APP.

NOTICE:
FOR YOUR SAFETY, YOU ARE REQUIRED BY TEXAS LAW TO CALL 811 AT LEAST 48 HOURS BEFORE YOU DIG SO THAT UNDERGROUND LINES CAN BE MARKED. THIS SIGNATURE DOES NOT FULFILL YOUR OBLIGATION TO CALL 811

VERIFICATION OF PRIVATE UTILITY LINES

Date

CenterPoint Energy natural gas utilities shown. (Gas service lines are not shown). This signature not be used for conflict verification.

Signature valid for six months.

Date

CenterPoint Energy/UNDERGROUND Electrical Facilities Verification ONLY. (This signature verifies existing underground facilities – not to be used for conflict verification)

Signature valid for six months.

Date

Approved for AT&T underground conduit facilities only.
Signature valid for one year.

PAPE-DAWSON
2107 CITYWEST BLVD, 3RD FLR I HOUSTON, TX 77042 I 713.428.2400
TEXAS ENGINEERING FIRM #470 I TEXAS SURVEYING FIRM #10028800

GAI
Gupta & Associates, Inc.
CONSULTING ENGINEERING
Registration No. F-2593
302 Dennis St.
Houston, Texas 77006
Tel: 713-636-2936
Fax: 713-636-2987
email: hforouzan@gaiconsulting.com

THIS DOCUMENT IS RELEASED FOR INTERIM REVIEW UNDER THE AUTHORIZATION OF HOSS FOROUZAN, P.E. (#77748) AND IS **NOT TO BE USED FOR CONSTRUCTION.**

SURVEYED BY:
PAPE-DAWSON ENGINEERS
FB NO. 24-018

CITY OF HOUSTON
HOUSTON PUBLIC WORKS

LIFT STATION REHABILITATION AND RECONSTRUCTION
BEN'S BRANCH, WOODLAND RIDGE, ELMWOOD HILLS, FOREST SHORES, TRAIL RIVER, RIVERLAWN

ELECTRICAL

FOREST SHORES LIFT STATION ELECTRICAL SERVICE RACK DETAIL

WBS NUMBER	FOR CITY OF HOUSTON USE ONLY
R-000267-0180-3	
DRAWING SCALE	
AS NOTED	
CITY OF HOUSTON PM	
BRENDA JOHNSON P.E.	
SHEET NO. XX OF XX	

FS-E-08

FILE PATH: O:\H8107_Lift Station Rehabilitation And Reconstruction (Pape Dawson)\6 Drawings\Electrical\Working\Forest Shores\H8107_FS-E-08.dwg

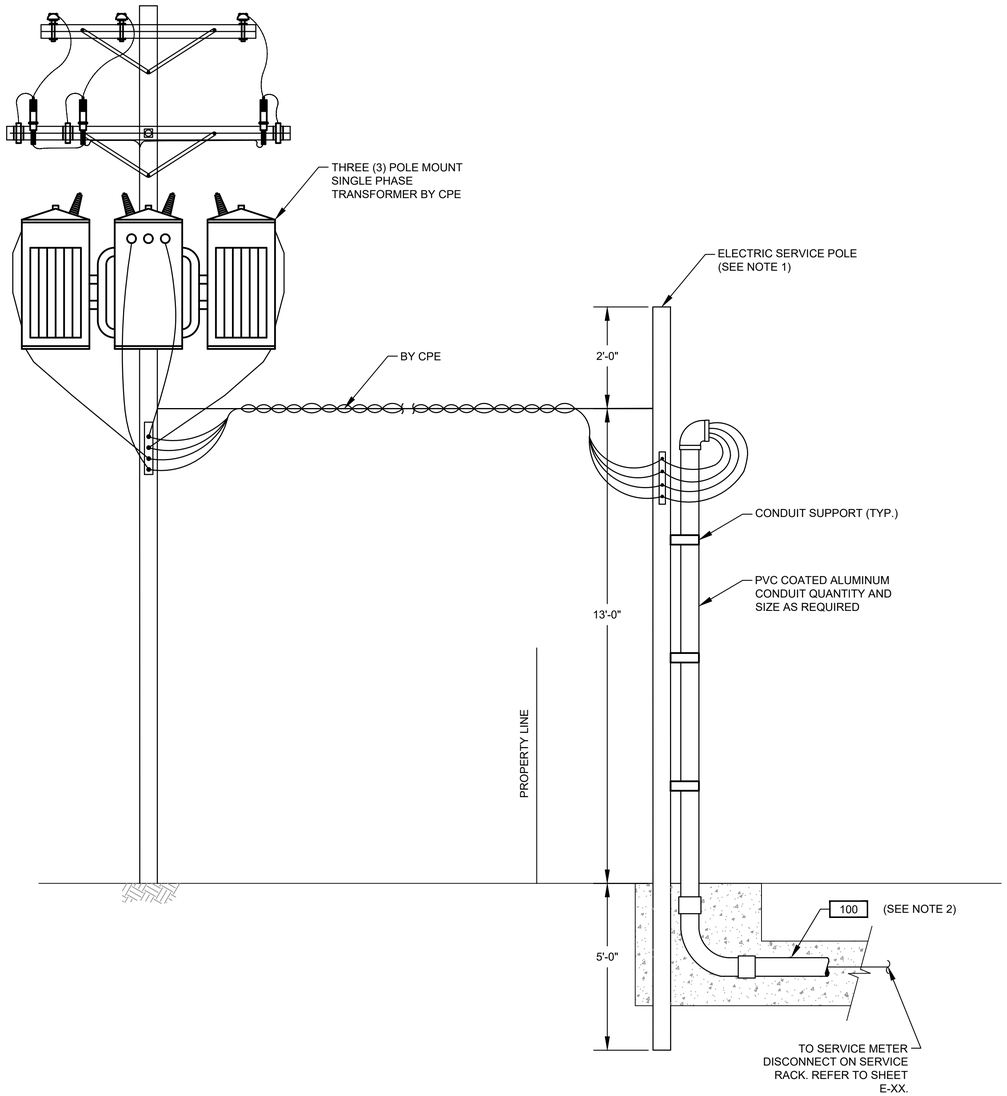

ELECTRICAL SERVICE ENTRANCE

DETAIL 1
NTS. -

NOTES:

1. WOODEN POLE 20' LONG. TOP DIAMETER 6", BOTTOM DIAMETER 8" PROVIDED AND INSTALLED BY ELECTRICAL CONTRACTOR.
2. ELECTRICAL SERVICE FEEDER PROVIDED AND INSTALLED BY ELECTRICAL CONTRACTOR. COORDINATE WITH CPE FOR THE REQUIREMENTS OF THE INSTALLATION.

NO.	DATE	REVISION	APP.

NOTICE:
FOR YOUR SAFETY, YOU ARE REQUIRED BY TEXAS LAW TO CALL 811 AT LEAST 48 HOURS BEFORE YOU DIG SO THAT UNDERGROUND LINES CAN BE MARKED. THIS SIGNATURE DOES NOT FULFILL YOUR OBLIGATION TO CALL 811

VERIFICATION OF PRIVATE UTILITY LINES

Date

CenterPoint Energy natural gas utilities shown. (Gas service lines are not shown). This signature not be used for conflict verification.

Signature valid for six months.

Date

CenterPoint Energy/UNDERGROUND Electrical Facilities Verification ONLY. (This signature verifies existing underground facilities – not to be used for conflict verification)

Signature valid for six months.

Date

Approved for AT&T underground conduit facilities only.
Signature valid for one year.

PAPE–DAWSON
2107 CITYWEST BLVD, 3RD FLR I HOUSTON, TX 77042 I 713.428.2400
TEXAS ENGINEERING FIRM #470 I TEXAS SURVEYING FIRM #10028800

GAI
Gupta & Associates, Inc.
CONSULTING ENGINEERING
Registration No. F-2593
302 Dennis St.
Houston, Texas 77006
Tel: 713-636-2936
Fax: 713-636-2987
email: hforouzan@gaiconsulting.com

THIS DOCUMENT IS RELEASED FOR INTERIM REVIEW UNDER THE AUTHORIZATION OF HOSS FOROUZAN, P.E. (#77748) AND IS **NOT TO BE USED FOR CONSTRUCTION.**

SURVEYED BY:
PAPE–DAWSON ENGINEERS
FB NO. 24–018

CITY OF HOUSTON
HOUSTON PUBLIC WORKS

LIFT STATION REHABILITATION AND RECONSTRUCTION
BEN'S BRANCH, WOODLAND RIDGE, ELMWOOD HILLS, FOREST SHORES, TRAIL RIVER, RIVERLAWN

ELECTRICAL

FOREST SHORES LIFT STATION SERVICE POLE DETAIL

WBS NUMBER	FOR CITY OF HOUSTON USE ONLY
R–000267–0180–3	
DRAWING SCALE	
AS NOTED	
CITY OF HOUSTON PM	
BRENDA JOHNSON P.E.	
SHEET NO. XX OF XX	

FS–E–09

FILE PATH: O:\H8107_Lift Station Rehabilitation And Reconstruction (Pape Dawson)\6 Drawings\Electrical\Working\Forest Shores\H8107_FS–E–09.dwg

	DESCRIPTION	SERVICE		ROUTING			CONDUIT & WIRE SIZE
		VOLTAGE	AMPS OR HP	FROM	TO	VIA	
A	MAIN BONDING JUMPER	--	--	MAIN FUSED DISCONNECT NEUTRAL	MAIN FUSED DISCONNECT GROUND	--	#4 CU GND.
B	EQUIPMENT BONDING JUMPER	--	--	MCC/POWER PANEL ENCLOSURE	POWER/CONTROL PANEL & EQUIPMENT	--	#4 CU GND.
C	GROUNDED ELECTRODE CONDUCTOR	--	--	GROUNDING ELECTRODE	MAIN SERVICE FUSED DISCONNECT GROUNDING	--	#4 CU GND.
100	SERVICE ENTRANCE	480V	200A	UTILITY POWER SERVICE	METER DISCONNECT	--	3 #3/0 AWG., #4 NEUT. #3 GND., 2-1/2" C.
100A	UTILITY POWER ENTRANCE	480V	200A	SERVICE DISCONNECT SWITCH	ATS	--	3 #3/0 AWG., #4 NEUT. #3 GND., 2-1/2" C.
100B	GENERATOR POWER ENTRANCE	480V	200A	STANDBY GENERATOR	ATS	--	3 #3/0 AWG., #4 NEUT. #3 GND., 2-1/2" C.
100C	480V POWER	480V	200A	ATS	CONTROL PANEL	--	3 #3/0 AWG., #4 NEUT. #3 GND., 2-1/2" C.
100D	GENERATOR CONTROL POWER	120/240V	50A	STANDBY GENERATOR	LIGHTING PANEL	--	3#4 AWG., #8 GND., 1-1/2"C.
100E	GENERATOR CONTROLS	24VDC	--	STANDBY GENERATOR	ATS	--	6#14 AWG., #14 GND., 3/4"C.
100F	NORMAL/EMERGENCY POWER STATUS	24VDC	--	ATS	CONTROL PANEL	--	4#14 AWG., #14 GND., 3/4"C.
100G	GENERATOR ANNUNCIATOR	24VDC	--	STANDBY GENERATOR	CONTROL PANEL	--	16#14 AWG., #14 GND., 1"C.
101	GROUND ELECTRODE CONDUCTOR	--	--	MCC ENCLOSURE	GROUND FIELD	--	#2/0 GND.
102	GROUND ELECTRODE CONDUCTOR	--	--	BUILDING STEEL	GROUND FIELD	--	#2/0 GND.
103	BUILDING GROUNDING	--	--	BUILDING REBAR	LIGHTNING GROUND ROD	--	#2/0 GND.
104	GROUND ELECTRODE CONDUCTOR	--	--	CONTROL PANEL	GROUND FIELD	--	#2/0 GND.
105	COMMUNICATION	--	--	COMMUNICATION POLE	CONTROL PANEL	--	1-1/2"C. CAT 5E
105A	COMMUNICATION POLE LIGHT	120V	--	COMMUNICATION POLE	LIGHTING PANEL	--	2#12, #12G, 1"C.
200	PUMP NO. 1 POWER	480V	12 HP	PUMP NO. 1	PUMP NO. 1 JUNCTION BOX	--	MANUFACTURER CABLE IN 2-1/2"C.
201	PUMP NO. 1 CONTROLS	120V	--	PUMP NO. 1	PUMP NO. 1 JUNCTION BOX	--	MANUFACTURER CABLE IN 2-1/2"C.
202	PUMP NO. 1 POWER	480V	12 HP	PUMP NO. 1 JUNCTION BOX	PUMP STARTER	--	3#8, #10 GND., 2"C.
203	COMBINED PUMP CONTROLS	120V	--	PUMP NO. 1 JUNCTION BOX	PUMP STARTER	COMBINE PUMP 1 & 2 CONTROLS	COMBINE 200 & 300 TAG WIRING, 8#14, 1"C.
300	PUMP NO. 2 POWER	480V	12 HP	PUMP NO. 2	PUMP NO. 2 JUNCTION BOX	--	MANUFACTURER CABLE IN 2-1/2"C.
301	PUMP NO. 2 CONTROLS	120V	--	PUMP NO. 2	PUMP NO. 2 JUNCTION BOX	--	MANUFACTURER CABLE IN 2-1/2"C.
302	PUMP NO. 2 POWER	480V	12 HP	PUMP NO. 2 JUNCTION BOX	PUMP STARTER	--	3#8, #10 GND., 2"C.
600	LIGHTING PANEL FEEDER	480V	40A	MOTOR CONTROL CENTER	LIGHTING TRANSFORMER	--	2#6, #6 GND., 1"C.
601	LIGHTING PANEL GROUND	--	--	LIGHTING PANEL	GROUND FIELD	--	#8 GND., 1"C.
602	LIGHTING PANEL FEEDER	120/240V	--	LIGHTING TRANSFORMER	LIGHTING PANEL	--	3#4, #6 GND., 1-1/4" C.
900	INTRUSION ALARM	24VDC	--	MOTION SWITCH	CONTROL PANEL	--	2#14, 3/4" C.
1000	LEVEL TRANSMITTER	24VDC	--	TRANSMITTER JUNCTION BOX	TRANSMITTER JUNCTION BOX	--	MANUFACTURER'S CABLE IN 2-1/2"C
1001	LEVEL TRANSMITTER	24VDC	--	TRANSMITTER JUNCTION BOX	TRANSMITTER JUNCTION BOX	--	MANUFACTURER'S CABLE IN 2-1/2"C
1002	COMBINED LEVEL TRANSMITTERS & FLOAT SWITCH	24VDC	--	CONTROL PANEL	TRANSMITTER JUNCTION BOX	--	2-TRI, 4#14, 2" C.
1003	WELL FLOAT SWITCHES	24VDC	--	TRANSMITTER JUNCTION BOX	FLOAT SWITCH NO.1 & NO.2	--	MANUFACTURER'S CABLE IN 2-1/2"C
1100	120VAC FOR RECEPTACLE	-	--	LIGHTING PANEL	RECEPTACLE NEXT TO TRANSMITTER J-BOX	--	2#12, #12G, 1" C.
1200	120VAC FOR RECEPTACLE	-	--	LIGHTING PANEL	RECEPTACLE NEXT TO PUMP NO.2 J-BOX	--	2#12, #12G, 1" C.
1300	SITE LIGHTING	120VAC	--	LIGHTING PANEL	SITE LIGHTS	--	2#12, #12G, 1" C.
1400	CHEMICAL INJECTION PUMP	120VAC	--	LIGHTING PANEL	CHEMICAL INJECTION PUMP	--	2#12, #12G, 1" C.
1401	LEVEL TRANSMITTER FOR CHEMICAL TANK	24VDC	--	CONTROL PANEL	LEVEL TRANSMITTER "LT-3" ON CHEMICAL TANK	--	1-TRI, 1" C.

NO.	DATE	REVISION	APP.

NOTICE:
FOR YOUR SAFETY, YOU ARE REQUIRED BY TEXAS LAW TO CALL 811 AT LEAST 48 HOURS BEFORE YOU DIG SO THAT UNDERGROUND LINES CAN BE MARKED. THIS SIGNATURE DOES NOT FULFILL YOUR OBLIGATION TO CALL 811

VERIFICATION OF PRIVATE UTILITY LINES

Date

CenterPoint Energy natural gas utilities shown. (Gas service lines are not shown). This signature not be used for conflict verification.

Signature valid for six months.

Date

CenterPoint Energy/UNDERGROUND Electrical Facilities Verification ONLY. (This signature verifies existing underground facilities – not to be used for conflict verification)

Signature valid for six months.

Date

Approved for AT&T underground conduit facilities only.
Signature valid for one year.

PAPE–DAWSON
2107 CITYWEST BLVD, 3RD FLR I HOUSTON, TX 77042 I 713.428.2400
TEXAS ENGINEERING FIRM #470 I TEXAS SURVEYING FIRM #10028800

GAI
Gupta & Associates, Inc.
CONSULTING ENGINEERING
Registration No. F-2593
302 Dennis St.
Houston, Texas 77006
Tel: 713-636-2936
Fax: 713-636-2987
email: hforouzan@gaiconsulting.com

SURVEYED BY:
PAPE–DAWSON ENGINEERS
FB NO. 24–018

THIS DOCUMENT IS RELEASED FOR INTERIM REVIEW UNDER THE AUTHORIZATION OF HOSS FOROUZAN, P.E. (#77748) AND IS **NOT TO BE USED FOR CONSTRUCTION.**

CITY OF HOUSTON
HOUSTON PUBLIC WORKS

LIFT STATION REHABILITATION AND RECONSTRUCTION
BEN'S BRANCH, WOODLAND RIDGE, ELMWOOD HILLS, FOREST SHORES, TRAIL RIVER, RIVERLAWN

ELECTRICAL

FOREST SHORES LIFT STATION CONDUIT SCHEDULE

WBS NUMBER	FOR CITY OF HOUSTON USE ONLY
R–000267–0180–3	
DRAWING SCALE	
AS NOTED	
CITY OF HOUSTON PM	
BRENDA JOHNSON P.E.	
SHEET NO. XX OF XX	

FS–E–10

FILE PATH: O:\H8107_Lift Station Rehabilitation And Reconstruction (Pape Dawson)\6 Drawings\Electrical\Working\Forest Shores\H8107_FS–E–10.dwg

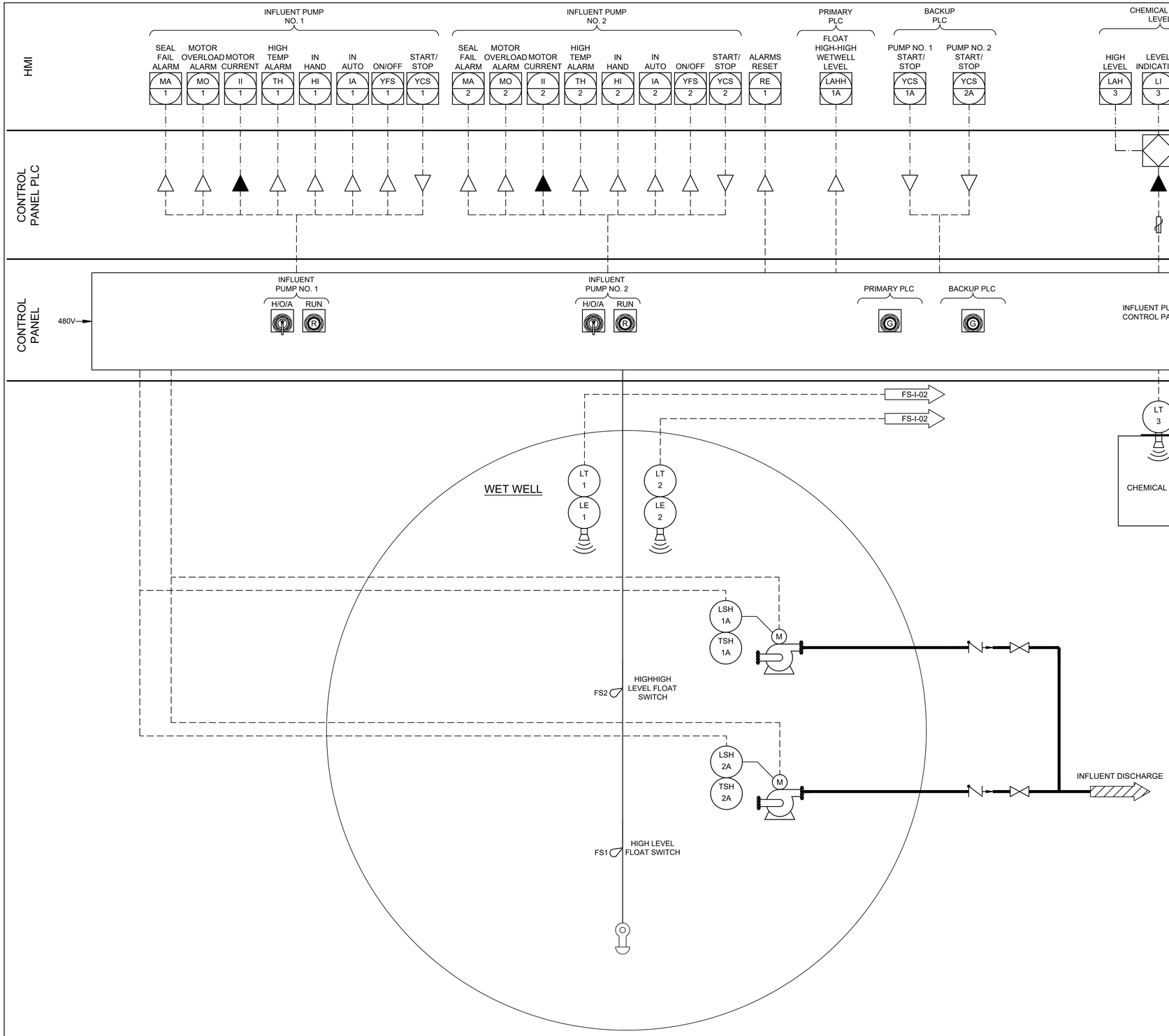

NO.	DATE	REVISION	APP.

NOTICE:
FOR YOUR SAFETY, YOU ARE REQUIRED BY TEXAS LAW TO CALL 811 AT LEAST 48 HOURS BEFORE YOU DIG SO THAT UNDERGROUND LINES CAN BE MARKED. THIS SIGNATURE DOES NOT FULFILL YOUR OBLIGATION TO CALL 811

VERIFICATION OF PRIVATE UTILITY LINES

Date

CenterPoint Energy natural gas utilities shown. (Gas service lines are not shown). This signature not be used for conflict verification.

Signature valid for six months.

Date

CenterPoint Energy/UNDERGROUND Electrical Facilities Verification ONLY. (This signature verifies existing underground facilities – not to be used for conflict verification)

Signature valid for six months.

Date

Approved for AT&T underground conduit facilities only.
Signature valid for one year.

PAPE–DAWSON
2107 CITYWEST BLVD, 3RD FLR I HOUSTON, TX 77042 I 713.428.2400
TEXAS ENGINEERING FIRM #470 I TEXAS SURVEYING FIRM #10028800

GAI
Gupta & Associates, Inc.
CONSULTING ENGINEERING
Registration No. F-2593
302 Dennis St.
Houston, Texas 77006
Tel: 713-636-2936
Fax: 713-636-2987
email: hforouzan@guiconsulting.com

SURVEYED BY:
PAPE–DAWSON ENGINEERS
FB NO. 24–018

THIS DOCUMENT IS RELEASED FOR INTERIM REVIEW UNDER THE AUTHORIZATION OF HOSS FOROUZAN, P.E. (#77748) AND IS **NOT TO BE USED FOR CONSTRUCTION.**

CITY OF HOUSTON
HOUSTON PUBLIC WORKS

LIFT STATION REHABILITATION AND RECONSTRUCTION
BEN'S BRANCH, WOODLAND RIDGE, ELMWOOD HILLS, FOREST SHORES, TRAIL RIVER, RIVERLAWN

INSTRUMENTATION

FOREST SHORES LIFT STATION INSTRUMENTATION P&ID DIAGRAM–I

WBS NUMBER	FOR CITY OF HOUSTON USE ONLY
R–000267–0180–3	
DRAWING SCALE	
AS NOTED	
CITY OF HOUSTON PM	
BRENDA JOHNSON P.E.	
SHEET NO. XX OF XX	

FS–I–01

FILE PATH: O:\H8107_Lift Station Rehabilitation And Reconstruction (Pape Dawson)\6 Drawings\Instrumentation And Control\Working\Forest Shores\H8107_FS–I–01.dwg

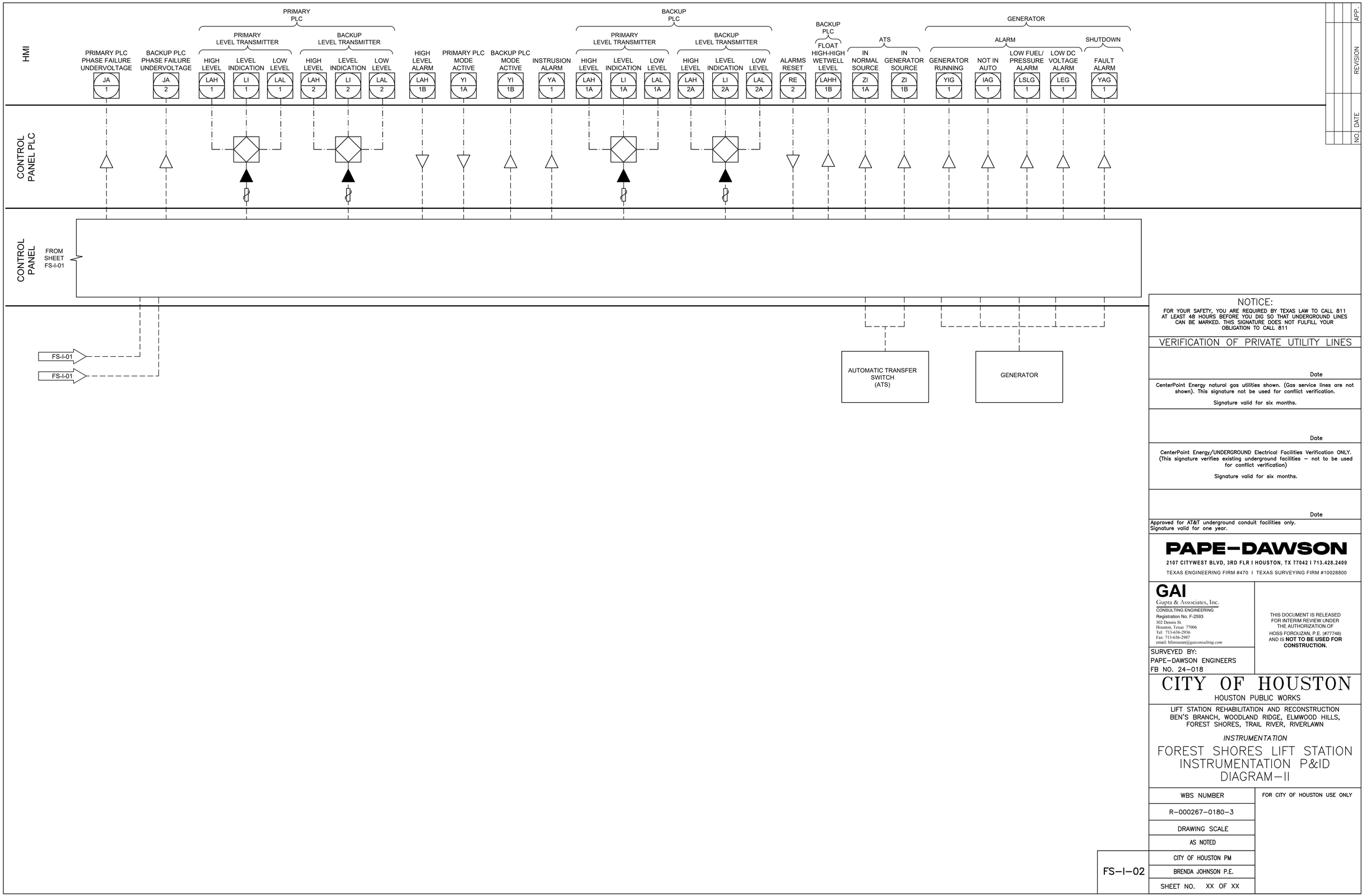

FILE PATH: O:\H8107_Lift Station Rehabilitation And Reconstruction (Pape Dawson)\6 Drawings\Instrumentation And Control\Working\Forest Shores\H8107_FS-I-02.dwg

NOTICE:
FOR YOUR SAFETY, YOU ARE REQUIRED BY TEXAS LAW TO CALL 811 AT LEAST 48 HOURS BEFORE YOU DIG SO THAT UNDERGROUND LINES CAN BE MARKED. THIS SIGNATURE DOES NOT FULFILL YOUR OBLIGATION TO CALL 811

VERIFICATION OF PRIVATE UTILITY LINES

Date

CenterPoint Energy natural gas utilities shown. (Gas service lines are not shown). This signature not be used for conflict verification.

Signature valid for six months.

Date

CenterPoint Energy/UNDERGROUND Electrical Facilities Verification ONLY. (This signature verifies existing underground facilities – not to be used for conflict verification)

Signature valid for six months.

Date

Approved for AT&T underground conduit facilities only.
Signature valid for one year.

PAPE–DAWSON
2107 CITYWEST BLVD, 3RD FLR I HOUSTON, TX 77042 I 713.428.2400
TEXAS ENGINEERING FIRM #470 I TEXAS SURVEYING FIRM #10028800

GAI
Gupta & Associates, Inc.
CONSULTING ENGINEERING
Registration No. F-2593
302 Dennis St.
Houston, Texas 77006
Tel: 713-636-2936
Fax: 713-636-2987
email: hforouzan@guiconsulting.com

SURVEYED BY:
PAPE–DAWSON ENGINEERS
FB NO. 24–018

THIS DOCUMENT IS RELEASED FOR INTERIM REVIEW UNDER THE AUTHORIZATION OF HOSS FOROUZAN, P.E. (#77748) AND IS **NOT TO BE USED FOR CONSTRUCTION.**

CITY OF HOUSTON
HOUSTON PUBLIC WORKS

LIFT STATION REHABILITATION AND RECONSTRUCTION
BEN'S BRANCH, WOODLAND RIDGE, ELMWOOD HILLS, FOREST SHORES, TRAIL RIVER, RIVERLAWN

INSTRUMENTATION

FOREST SHORES LIFT STATION INSTRUMENTATION P&ID DIAGRAM–II

WBS NUMBER	FOR CITY OF HOUSTON USE ONLY
R–000267–0180–3	
DRAWING SCALE	
AS NOTED	
CITY OF HOUSTON PM	
BRENDA JOHNSON P.E.	
SHEET NO. XX OF XX	

FS–I–02

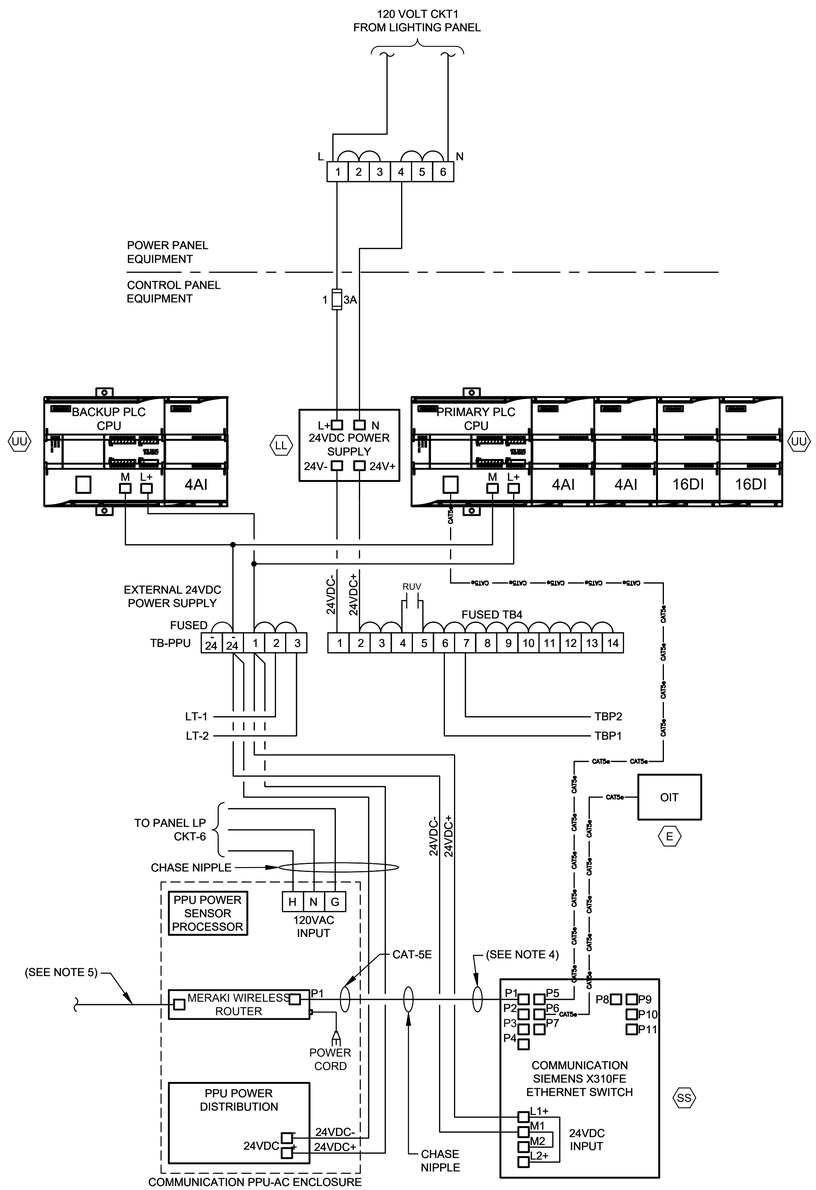

CONTROL POWER &
COMMUNICATIONS WIRING

DIAGRAM

NTS

(SEE NOTE 2 & 6)

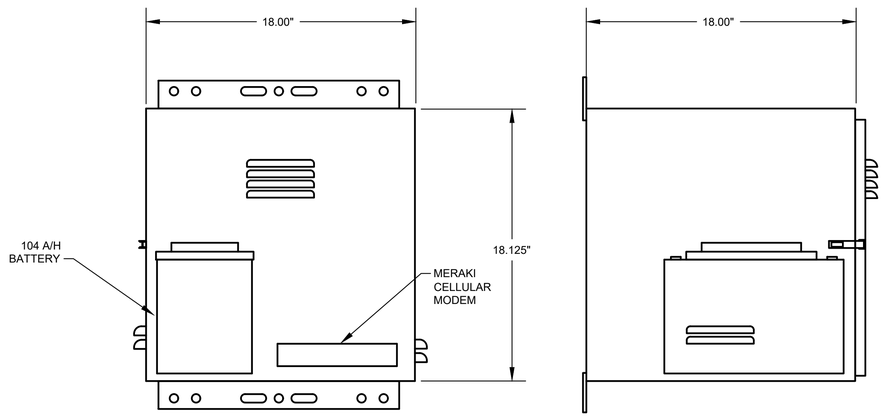

PPU-AC
CONTROL ENCLOSURE

ELEVATION

NTS

(SEE NOTE 7)

NOTES:

1. FOR DESCRIPTION AND RATINGS OF ITEMS INDICATED WITH ITEM TAG, SEE DEVICE RATINGS SCHEDULE.
2. REFER TO SPEC SECTION 16120 FOR CONDUCTOR COLOR CODE.
3. THE PLC POWER SUPPLY SHALL FEED THE 24VDC I/O.
4. ETHERNET CABLE FOR MERAKI CELLULAR ROUTER (P1).
5. POE CABLE TO RADIO.
6. COMMUNICATION PPU-AC & SCADA SHALL BE PROVIDED BY CONTRACTOR INCLUDING TO RUN CONDUITS & WIRES.
7. COORDINATE WITH VENDOR TO PROVIDE PROPER VENTILATION WHERE APPLICABLE.

NO.	DATE	REVISION	APP.

NOTICE:
FOR YOUR SAFETY, YOU ARE REQUIRED BY TEXAS LAW TO CALL 811 AT LEAST 48 HOURS BEFORE YOU DIG SO THAT UNDERGROUND LINES CAN BE MARKED. THIS SIGNATURE DOES NOT FULFILL YOUR OBLIGATION TO CALL 811

VERIFICATION OF PRIVATE UTILITY LINES

Date

CenterPoint Energy natural gas utilities shown. (Gas service lines are not shown). This signature not be used for conflict verification.

Signature valid for six months.

Date

CenterPoint Energy/UNDERGROUND Electrical Facilities Verification ONLY. (This signature verifies existing underground facilities – not to be used for conflict verification)

Signature valid for six months.

Date

Approved for AT&T underground conduit facilities only.
Signature valid for one year.

PAPE–DAWSON

2107 CITYWEST BLVD, 3RD FLR I HOUSTON, TX 77042 I 713.428.2400

TEXAS ENGINEERING FIRM #470 I TEXAS SURVEYING FIRM #10028800

GAI
Gupta & Associates, Inc.
CONSULTING ENGINEERING
Registration No. F-2593
302 Dennis St.
Houston, Texas 77006
Tel: 713-636-2936
Fax: 713-636-2987
email: hforouzan@gaiconsulting.com

SURVEYED BY:
PAPE–DAWSON ENGINEERS
FB NO. 24–018

THIS DOCUMENT IS RELEASED FOR INTERIM REVIEW UNDER THE AUTHORIZATION OF HOSS FOROUZAN, P.E. (#77748) AND IS **NOT TO BE USED FOR CONSTRUCTION.**

CITY OF HOUSTON
HOUSTON PUBLIC WORKS

LIFT STATION REHABILITATION AND RECONSTRUCTION
BEN'S BRANCH, WOODLAND RIDGE, ELMWOOD HILLS, FOREST SHORES, TRAIL RIVER, RIVERLAWN

INSTRUMENTATION

FOREST SHORES LIFT STATION COMMUNICATIONS DIAGRAM

WBS NUMBER	FOR CITY OF HOUSTON USE ONLY
R–000267–0180–3	
DRAWING SCALE	
AS NOTED	
CITY OF HOUSTON PM	
BRENDA JOHNSON P.E.	
SHEET NO. XX OF XX	

FS–I–03

FILE PATH: O:\H8107_Lift Station Rehabilitation And Reconstruction (Pape Dawson)\6 Drawings\Instrumentation And Control\Working\Forest Shores\H8107_FS–I–03.dwg

EQUIPMENT AND DEVICE SCHEDULE

ITEM	QUANTITY	DESCRIPTION
A	1	PANEL BOARD, 120/240V, 1 PHASE, 3 WIRE, 100A, 12 CKTS
B	2	FULL VOLTAGE, NON-REVERSING, SINGLE SPEED, AUTOMATIC MOTOR STARTER W/120 VOLT CONTROL COIL, NEMA SIZE AS SCHEDULED.
C	2	TIME DELAY RELAY WITH THREE FORM C CONTACTS, 120VAC COIL AND 11 PIN SOCKET BASE.
D	1	SINGLE CHANNEL INTRINSICALLY SAFE RELAY
E	1	PROGRAMMING SCREEN (OIT)
F	2	HAND-OFF-AUTO SWITCH, 3 POSITION, HEAVY-DUTY, OILTIGHT WITH 2 SETS OF CONTACT BLOCKS (PUMP CONTROL)
G	2	INDICATING LIGHT, HEAVY DUTY, OILTIGHT, RED, 24 VDC, LED, WITH "RUN" LEGEND
H	1	PERPETUAL POWER UNIT (PPU)
I	1	PUMP ALARM RESET PUSHBUTTON
J	2	SWITCH FOR CABINET LIGHT, 120V, 20A, SPST
K	3	DUPLEX RECEPTACLE, 120V, 20A, 2 WIRE, GROUNDED
L	2	24" LED STRIP LIGHT 120V SUITABLE FOR ZERO DEGREE OPERATION.
M	1	SURGE PROTECTOR - INCOMING POWER
N	*	NOT USED.
P	2	CURRENT TRANSFORMER, RATIO AS SCHEDULED W/4-20mA OUTPUT.
Q	12	TERMINAL BLOCKS, SIZED FOR MOTOR POWER REQUIREMENTS
R	*	RELAY WITH THREE FORM C CONTACTS, AND 11 PIN SOCKET BASE
S	*	NOT USED.
T	*	NAMEPLATES, SEE SPECIFICATIONS (SEE NAMEPLATE SCHEDULE)
U	2	SOLID STATE MOTOR OVERLOAD RELAY
V	6	FUSE HOLDER & FUSES - PHASE FAILURE
W	1	NEMA 3R GASKETED ALUMINUM ENCLOSURE WITHOUT VENTS 72"H x 48"W x 36"D
X	1	DOOR MOUNTED ROTARY HANDLE DISCONNECT SWITCH (SUITABLE FOR ENVIRONMENT)
Y	1	THERMAL-MAGNETIC MOLDED CASE MAIN CIRCUIT BREAKER, SIZE AS SCHEDULED
Z	2	ADJUSTABLE INSTANTENOUS TRIP MOTOR CIRCUIT PROTECTOR, SIZE AS SCHEDULED
AA	*	TERMINAL BLOCKS
BB	2	EXTERNAL OVERLOAD RESET PUSHBUTTON MECHANISM
CC	3	ANALOG I/O SURGE SUPPRESSOR
DD	1	WIRE DUCT 2" WIDE x 2" DEEP MINIMUM
EE	1	THERMAL-MAGNETIC MODLED CASE CIRCUIT BREAKER FOR LIGHTING TRANSFORMER, SIZE AS SCHEDULED
FF	1	GROUND BUS
GG	1	25 KVA, 480 - 240/120V,1ϕ, 3W DRY TYPE NEMA 3R ENCLOSURE TRANSFORMER (PAD MOUNTED)
HH	*	NOT USED.
II	1	120VAC - 24VAC POWER SUPPLY (AS REQUIRED)
JJ	11	CARTRIDGE FUSES & FUSE HOLDER
KK	8	QUARTER TURN CAPTIVE DOOR CLOSURE
LL	1	120VAC - 24VDC PLC POWER SUPPLY 5A
MM	2	MOTION SWITCH
NN	*	NOT USED
PP	2	INDICATING LED LIGHT, HEAVY DUTY, OILTIGHT, GREEN, 24 VDC, LED WITH " PRIMARY PLC" & "BACKUP PLC" LEGEND
QQ	*	NOT USED
RR	*	NOT USED
SS	1	COMMUNICATION ETHERNET SWITCH
TT	1	POWER SURGE PROTECTOR - CONTROL POWER
UU	2	PROGRAMMABLE LOGIC CONTROLLER WITH EXPANSION UNIT
VV	1	PHASE AND UNDER VOLTAGE MONITOR
WW	*	FUSED TERMINAL BLOCKS
XX	2	PUMP PROTECTION MODULE RATED FOR CLASS I, DIVISION I
YY	2	ANALOG SIGNAL ISOLATOR
ZZ	-	NOT USED
AB	-	NOT USED.
AC	1	POWER DISTRIBUTION BLOCK
AD	1	NEUTRAL LUG
AE	1	6" EXHAUST FAN, 120V, STAINLESS FILTERS & GRILL PACKAGE W/BUG GUARD
AF	1	T-STAT FOR EXHAUST FAN

* - AS SCHEDULED

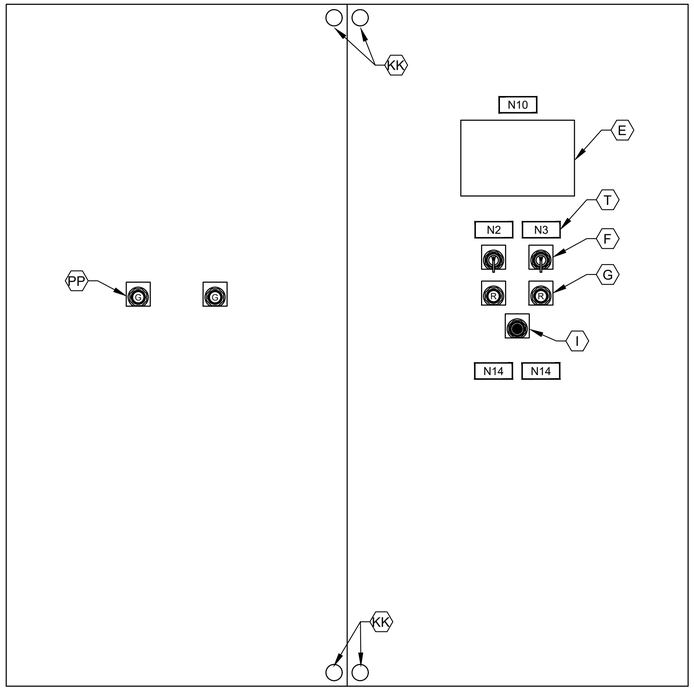

CONTROL PANEL FRONT INNER DOOR

ELEVATION

NTS

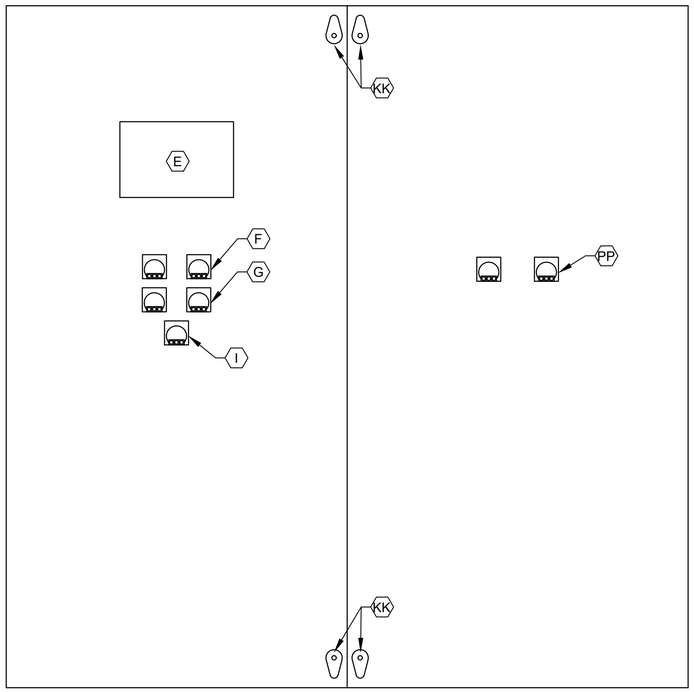

CONTROL PANEL BACK INNER DOOR

ELEVATION

NTS

NOTES:

1. NAMEPLATES SHALL BE MOUNTED TO PANELS USING STAINLESS STEEL HARDWARE.
2. REFER SPECIFICATIONS FOR ALL PANEL COMPONENTS.

NO.	DATE	REVISION	APP.

NOTICE:
FOR YOUR SAFETY, YOU ARE REQUIRED BY TEXAS LAW TO CALL 811 AT LEAST 48 HOURS BEFORE YOU DIG SO THAT UNDERGROUND LINES CAN BE MARKED. THIS SIGNATURE DOES NOT FULFILL YOUR OBLIGATION TO CALL 811

VERIFICATION OF PRIVATE UTILITY LINES

Date

CenterPoint Energy natural gas utilities shown. (Gas service lines are not shown). This signature not be used for conflict verification.

Signature valid for six months.

Date

CenterPoint Energy/UNDERGROUND Electrical Facilities Verification ONLY. (This signature verifies existing underground facilities – not to be used for conflict verification)

Signature valid for six months.

Date

Approved for AT&T underground conduit facilities only.
Signature valid for one year.

PAPE–DAWSON
2107 CITYWEST BLVD, 3RD FLR I HOUSTON, TX 77042 I 713.428.2400
TEXAS ENGINEERING FIRM #470 I TEXAS SURVEYING FIRM #10028800

GAI
Gupta & Associates, Inc.
CONSULTING ENGINEERING
Registration No. F-2593
302 Dennis St.
Houston, Texas 77006
Tel: 713-636-2936
Fax: 713-636-2987
email: hforouzan@gaiconsulting.com

SURVEYED BY:
PAPE–DAWSON ENGINEERS
FB NO. 24–018

THIS DOCUMENT IS RELEASED FOR INTERIM REVIEW UNDER THE AUTHORIZATION OF HOSS FOROUZAN, P.E. (#77748) AND IS **NOT TO BE USED FOR CONSTRUCTION.**

CITY OF HOUSTON

HOUSTON PUBLIC WORKS

LIFT STATION REHABILITATION AND RECONSTRUCTION
BEN'S BRANCH, WOODLAND RIDGE, ELMWOOD HILLS, FOREST SHORES, TRAIL RIVER, RIVERLAWN

INSTRUMENTATION

FOREST SHORES LIFT STATION CONTROL CABINET EQUIPMENT LAYOUT & SCHEDULE

WBS NUMBER	FOR CITY OF HOUSTON USE ONLY
R–000267–0180–3	
DRAWING SCALE	
AS NOTED	
CITY OF HOUSTON PM	
BRENDA JOHNSON P.E.	
SHEET NO. XX OF XX	

FS–I–04

FILE PATH: O:\H8107_Lift Station Rehabilitation And Reconstruction (Pape Dawson)\6 Drawings\Instrumentation And Control\Working\Forest Shores\H8107_FS–I–04.dwg

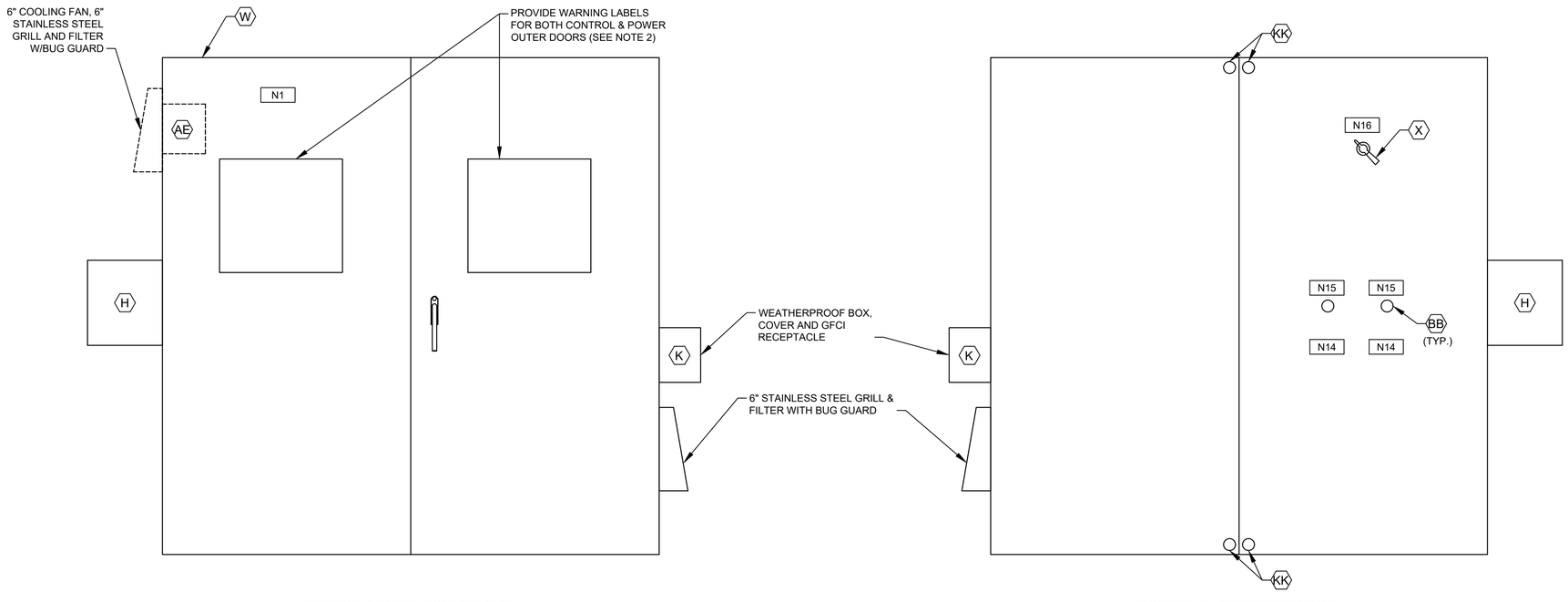

CONTROL CABINET (CONTROL SIDE)
OUTER DOOR

ELEVATION

NTS

CONTROL CABINET (POWER SIDE)
INNER DOOR

ELEVATION

NTS

(SEE NOTE 1)

NOTES:

1. SEE SHEET FS-I-04 FOR EQUIPMENT SCHEDULE.
2. REFER TO NEC SECTIONS 110.16 & 110.21

NAMEPLATE SCHEDULE

DESIGNATION	ENGRAVED
N1	PUMP STATION DESIGNATION
N2	PUMP NO. 1
N3	PUMP NO. 2
N4	NOT USED.
N5	NOT USED.
N6	NOT USED.
N7	NOT USED.
N8	NOT USED.
N9	NOT USED.
N10	PROGRAMMING SCREEN
N11	NOT USED.
N12	PRIMARY PLC
N13	BACKUP PLC
N14	MOTOR DATA
	HORSEPOWER (OUTPUT) ----------
	RPM AT FULL LOAD ----------
	TIME RATING ----------
	FREQUENCY ----------
	NUMBER OF PHASES ----------
	MODEL NUMBER ----------
	RATED VOLTAGE ----------
	SERVICE FACTOR ----------
	FULL LOAD AMPS ----------
	INSULATION CLAS ----------
	NEMA DESIGN LETTER ----------
	TEMPERATURE RISE ----------
	NEMA FRAME SIZE ----------
	DATE OF MANUFACTURE ----------
	THERMO PROTECTION (IF REQUIRED) --
	MOISTURE PROTECTION (IF REQUIRED)-
N15	EXTERNAL OVERLOAD RESET PUSH BUTTON MECHANISM
N16	MAIN BREAKER

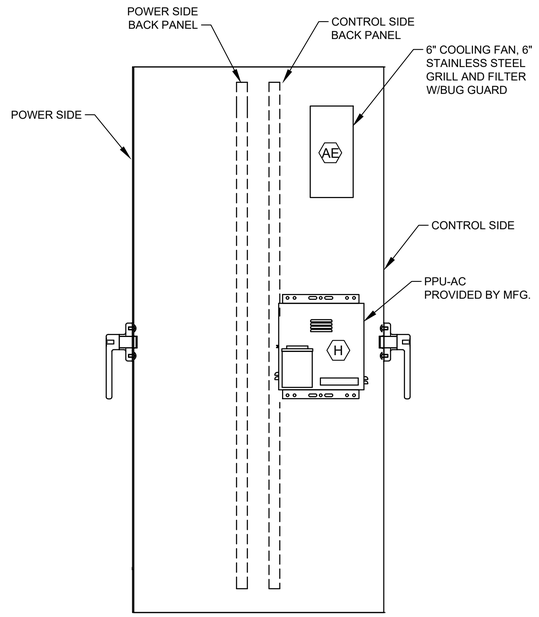

CONTROL CABINET (LEFT SIDE VIEW)

ELEVATION

NTS

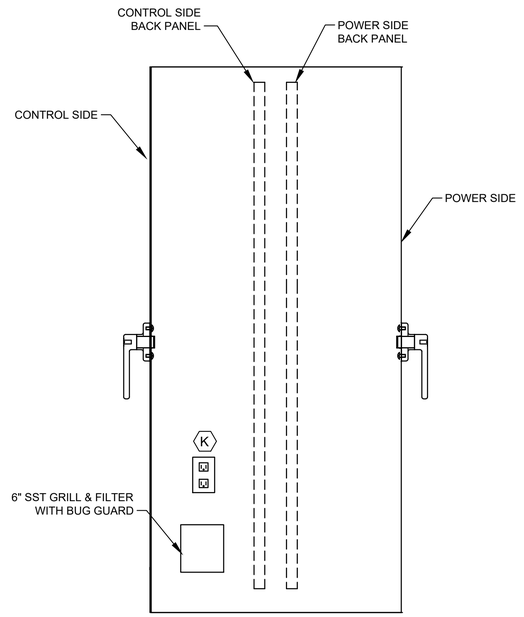

CONTROL CABINET (RIGHT SIDE VIEW)

ELEVATION

NTS

NO.	DATE	REVISION	APP.

NOTICE:
FOR YOUR SAFETY, YOU ARE REQUIRED BY TEXAS LAW TO CALL 811 AT LEAST 48 HOURS BEFORE YOU DIG SO THAT UNDERGROUND LINES CAN BE MARKED. THIS SIGNATURE DOES NOT FULFILL YOUR OBLIGATION TO CALL 811

VERIFICATION OF PRIVATE UTILITY LINES

Date

CenterPoint Energy natural gas utilities shown. (Gas service lines are not shown). This signature not be used for conflict verification.

Signature valid for six months.

Date

CenterPoint Energy/UNDERGROUND Electrical Facilities Verification ONLY. (This signature verifies existing underground facilities – not to be used for conflict verification)

Signature valid for six months.

Date

Approved for AT&T underground conduit facilities only.
Signature valid for one year.

PAPE–DAWSON
2107 CITYWEST BLVD, 3RD FLR I HOUSTON, TX 77042 I 713.428.2400
TEXAS ENGINEERING FIRM #470 I TEXAS SURVEYING FIRM #10028800

GAI
Gupta & Associates, Inc.
CONSULTING ENGINEERING
Registration No. F-2593
302 Dennis St.
Houston, Texas 77006
Tel: 713-636-2936
Fax: 713-636-2987
email: hforouzan@gaiconsulting.com

THIS DOCUMENT IS RELEASED FOR INTERIM REVIEW UNDER THE AUTHORIZATION OF HOSS FOROUZAN, P.E. (#77748) AND IS **NOT TO BE USED FOR CONSTRUCTION.**

SURVEYED BY:
PAPE–DAWSON ENGINEERS
FB NO. 24–018

CITY OF HOUSTON
HOUSTON PUBLIC WORKS

LIFT STATION REHABILITATION AND RECONSTRUCTION
BEN'S BRANCH, WOODLAND RIDGE, ELMWOOD HILLS, FOREST SHORES, TRAIL RIVER, RIVERLAWN

INSTRUMENTATION

FOREST SHORES LIFT STATION CONTROL CABINET EQUIPMENT LAYOUT–I

WBS NUMBER	FOR CITY OF HOUSTON USE ONLY
R–000267–0180–3	
DRAWING SCALE	
AS NOTED	
CITY OF HOUSTON PM	
BRENDA JOHNSON P.E.	
SHEET NO. XX OF XX	

FS–I–05

FILE PATH: O:\H8107_Lift Station Rehabilitation And Reconstruction (Pape Dawson)\6 Drawings\Instrumentation And Control\Working\Forest Shores\H8107_FS–I–05.dwg

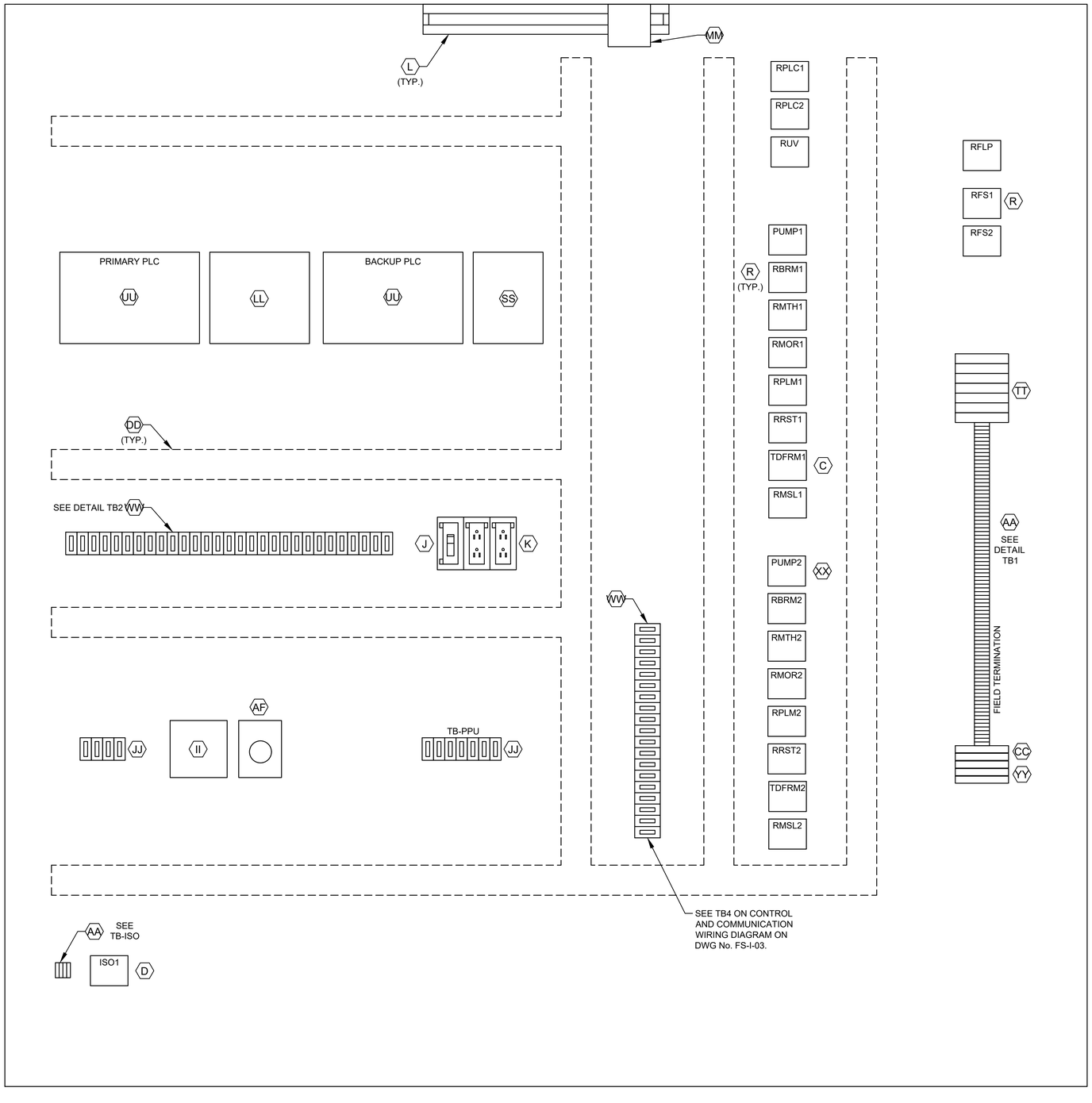

CONTROL PANEL
ELEVATION

DETAIL TB1
L1A
L1N
SPARE
3
3N
49
50
51
52
53
54
1004
1
24V-
24V-
1002
2
11
1001
1001A
12
1003
1003A
1002
1004
18
3N
19
20
36
36N
41
42
43
44
SPARE
L1A
L1N
103
104
105
106
107
108
110
113
115
116
119
SPARE
203
204
205
206
207
208
210
213
215
216
219

ALL L AND N FOR EACH PUMP CONTROL TO BE FUSED

DETAIL TB2
36A
37A
50
52
54
52A
54A
L+
M
35B
38B
41B
47B
13B
13AB
13GB
L+
M
14B
14AB
14GB
L+
M
13
13A
13G
14
14A
14G
SPARE
18
SPARE
28
29
32
35B
33
42
44
SPARE
103
104
115
109
110
118
120
121
122
123
SPARE
209
210
211
218
220
222
223

DETAIL TB-ISO
1500
1501
1503
1504

LEGEND	
TAG	DESCRIPTION
RMTH	MOTOR HIGH TEMPERATURE ALARM RELAY
RPLM	PLC PUMP RUN RELAY
RRST	PUMP RESET AUX RELAY
RPLC	PLC MODE AUX RELAY
RMOR	MOTOR OVERLOAD ALARM RELAY
RBRM	BACKUP SYSTEM RUN RELAY
RUV	UNDER VOLTAGE RELAY
ISO	INTRINSICALLY SAFE RELAY
RFS	PUMP RUN FLOAT SWITCH RELAY
TDFRM	TIMER FLOAT SWITCH RUN RELAY
RMSL	MOTOR SEAL LEAK ALARM RELAY
RFLP	FLOAT LOCKOUT PUMP RELAY

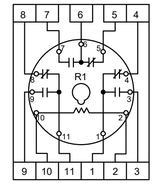

RELAY DETAIL
ITEM R

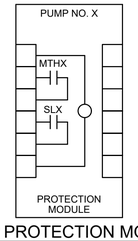

PUMP PROTECTION MODULE
DETAIL, ITEM XX

NOTE: REPLACE "X" WITH APPROPRIATE PUMP NO.

NOTES:

1. SEE SHEET FS-I-04 FOR EQUIPMENT SCHEDULE.

NO.	DATE	REVISION	APP.

NOTICE:
FOR YOUR SAFETY, YOU ARE REQUIRED BY TEXAS LAW TO CALL 811 AT LEAST 48 HOURS BEFORE YOU DIG SO THAT UNDERGROUND LINES CAN BE MARKED. THIS SIGNATURE DOES NOT FULFILL YOUR OBLIGATION TO CALL 811

VERIFICATION OF PRIVATE UTILITY LINES

Date

CenterPoint Energy natural gas utilities shown. (Gas service lines are not shown). This signature not be used for conflict verification.

Signature valid for six months.

Date

CenterPoint Energy/UNDERGROUND Electrical Facilities Verification ONLY. (This signature verifies existing underground facilities – not to be used for conflict verification)

Signature valid for six months.

Date

Approved for AT&T underground conduit facilities only.
Signature valid for one year.

PAPE–DAWSON
2107 CITYWEST BLVD, 3RD FLR I HOUSTON, TX 77042 I 713.428.2400
TEXAS ENGINEERING FIRM #470 I TEXAS SURVEYING FIRM #10028800

GAI
Gupta & Associates, Inc.
CONSULTING ENGINEERING
Registration No. F-2593
302 Dennis St.
Houston, Texas 77006
Tel: 713-636-2936
Fax: 713-636-2987
email: hforouzan@gaiconsulting.com

THIS DOCUMENT IS RELEASED FOR INTERIM REVIEW UNDER THE AUTHORIZATION OF HOSS FOROUZAN, P.E. (#77748) AND IS **NOT TO BE USED FOR CONSTRUCTION.**

SURVEYED BY:
PAPE–DAWSON ENGINEERS
FB NO. 24–018

CITY OF HOUSTON
HOUSTON PUBLIC WORKS

LIFT STATION REHABILITATION AND RECONSTRUCTION
BEN'S BRANCH, WOODLAND RIDGE, ELMWOOD HILLS, FOREST SHORES, TRAIL RIVER, RIVERLAWN

INSTRUMENTATION

FOREST SHORES LIFT STATION CONTROL CABINET EQUIPMENT LAYOUT–II

WBS NUMBER	FOR CITY OF HOUSTON USE ONLY
R–000267–0180–3	
DRAWING SCALE	
AS NOTED	
CITY OF HOUSTON PM	
BRENDA JOHNSON P.E.	
SHEET NO. XX OF XX	

FS–I–06

FILE PATH: O:\H8107_Lift Station Rehabilitation And Reconstruction (Pape Dawson)\6 Drawings\Instrumentation And Control\Working\Forest Shores\H8107_FS–I–06.dwg

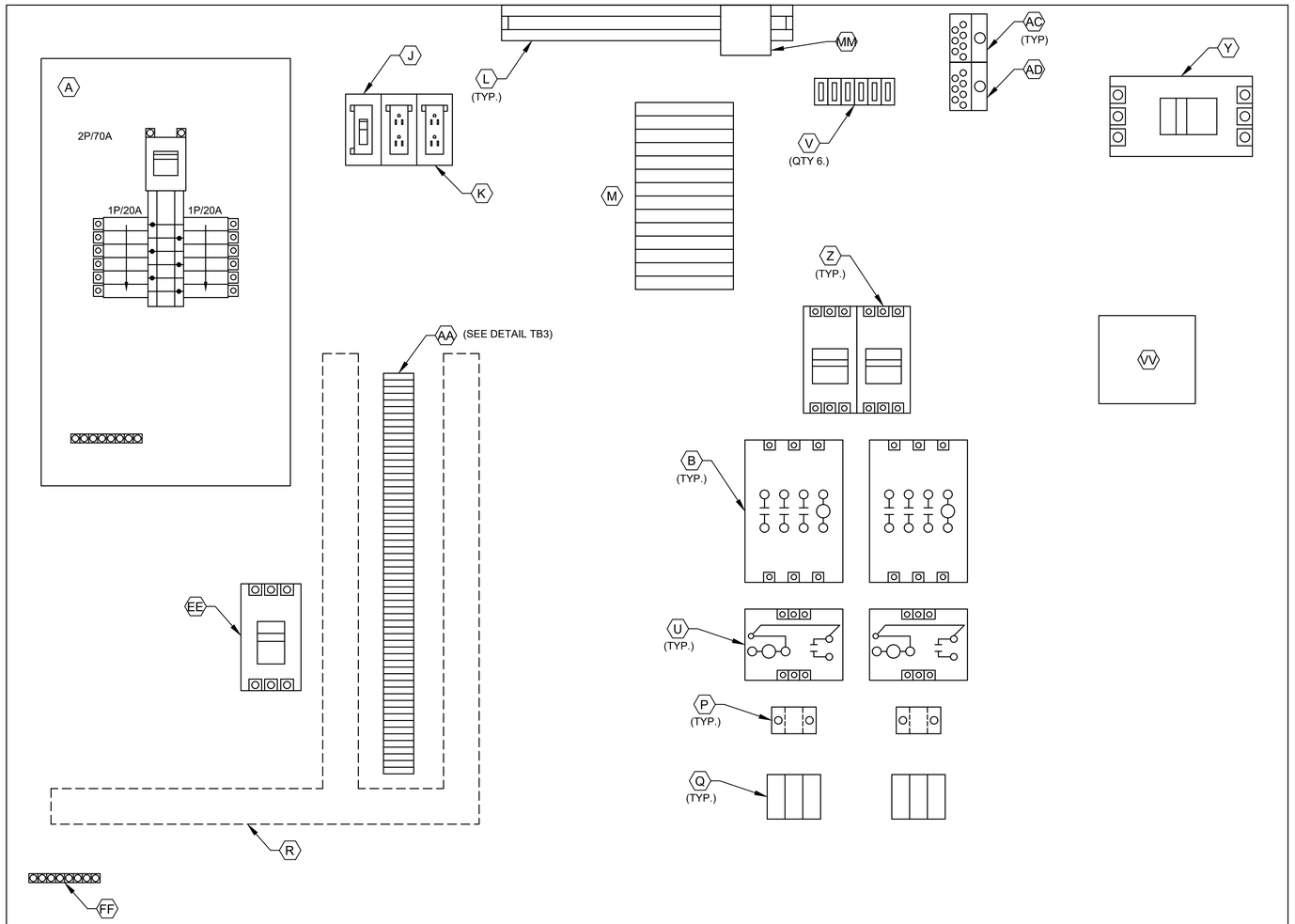

POWER PANEL
ELEVATION

3
18
L1A
L1N
SPARE
SPARE
103
104
105
106
107
108
110
113
115
116
119
SPARE
203
204
205
206
207
208
210
213
215
216
219
SPARE
SPARE
SPARE
SPARE
SPARE
SPARE
SPARE
SPARE
SPARE

DETAIL TB3

NOTES:

1. SEE SHEET FS-I-04 FOR EQUIPMENT SCHEDULE.

NO.	DATE	REVISION	APP.

NOTICE:
FOR YOUR SAFETY, YOU ARE REQUIRED BY TEXAS LAW TO CALL 811 AT LEAST 48 HOURS BEFORE YOU DIG SO THAT UNDERGROUND LINES CAN BE MARKED. THIS SIGNATURE DOES NOT FULFILL YOUR OBLIGATION TO CALL 811

VERIFICATION OF PRIVATE UTILITY LINES

Date

CenterPoint Energy natural gas utilities shown. (Gas service lines are not shown). This signature not be used for conflict verification.

Signature valid for six months.

Date

CenterPoint Energy/UNDERGROUND Electrical Facilities Verification ONLY. (This signature verifies existing underground facilities – not to be used for conflict verification)

Signature valid for six months.

Date

Approved for AT&T underground conduit facilities only.
Signature valid for one year.

PAPE–DAWSON
2107 CITYWEST BLVD, 3RD FLR I HOUSTON, TX 77042 I 713.428.2400
TEXAS ENGINEERING FIRM #470 I TEXAS SURVEYING FIRM #10028800

GAI
Gupta & Associates, Inc.
CONSULTING ENGINEERING
Registration No. F-2593
302 Dennis St.
Houston, Texas 77006
Tel: 713-636-2936
Fax: 713-636-2987
email: hforouzan@gaiconsulting.com

SURVEYED BY:
PAPE–DAWSON ENGINEERS
FB NO. 24–018

THIS DOCUMENT IS RELEASED FOR INTERIM REVIEW UNDER THE AUTHORIZATION OF HOSS FOROUZAN, P.E. (#77748) AND IS **NOT TO BE USED FOR CONSTRUCTION.**

CITY OF HOUSTON
HOUSTON PUBLIC WORKS

LIFT STATION REHABILITATION AND RECONSTRUCTION
BEN'S BRANCH, WOODLAND RIDGE, ELMWOOD HILLS, FOREST SHORES, TRAIL RIVER, RIVERLAWN

INSTRUMENTATION

FOREST SHORES LIFT STATION CONTROL CABINET EQUIPMENT LAYOUT–III

WBS NUMBER	FOR CITY OF HOUSTON USE ONLY
R–000267–0180–3	
DRAWING SCALE	
AS NOTED	
CITY OF HOUSTON PM	
BRENDA JOHNSON P.E.	
SHEET NO. XX OF XX	

FS–I–07

FILE PATH: O:\H8107_Lift Station Rehabilitation And Reconstruction (Pape Dawson)\6 Drawings\Instrumentation And Control\Working\Forest Shores\H8107_FS–I–07.dwg

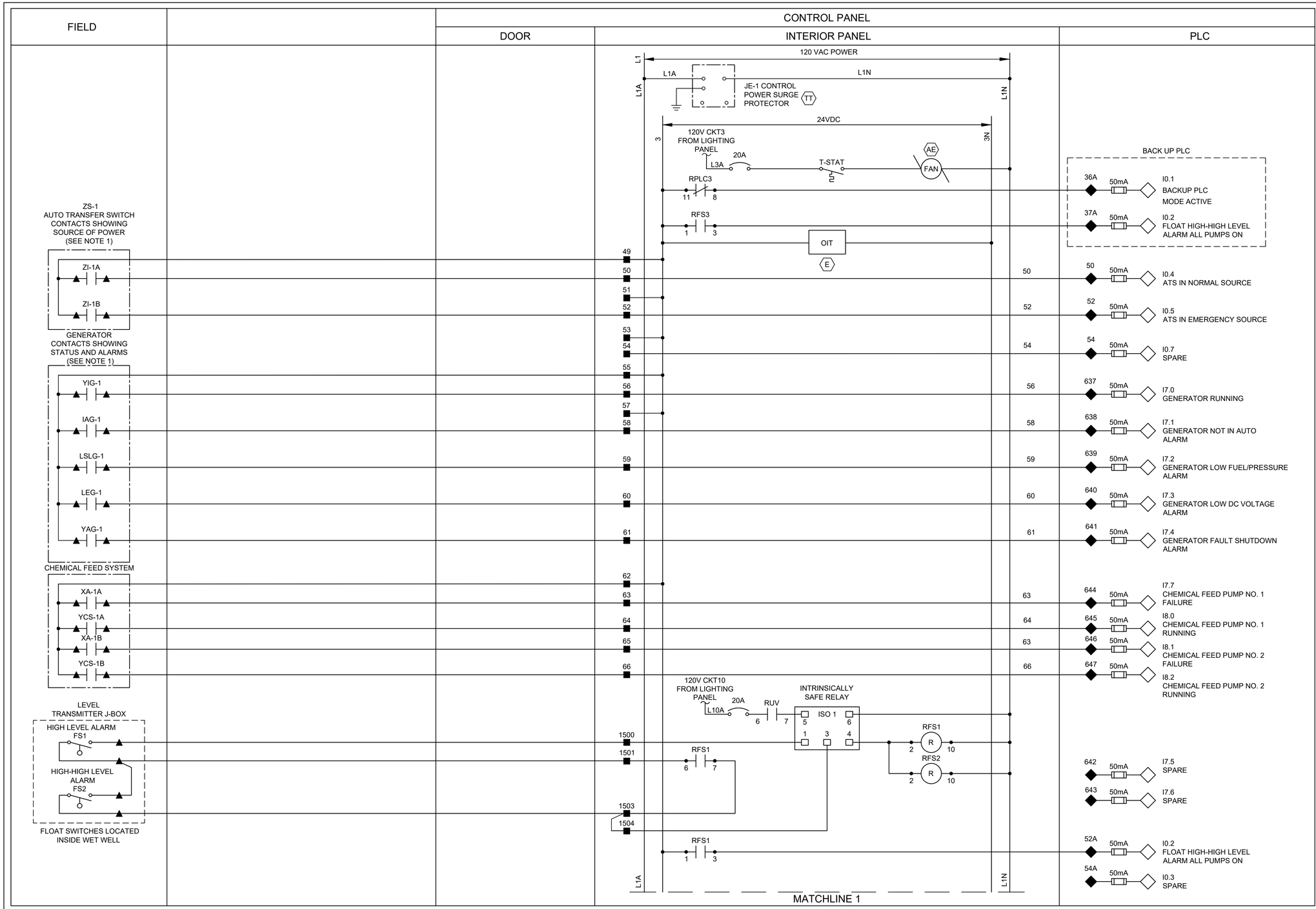

LEGEND

- △ DEVICE OR FIELD TERMINAL LOCATED AT MOTOR
- ✳ DEVICE OR FIELD TERMINAL LOCATED REMOTE
- □ DEVICE OR FIELD TERMINAL LOCATED AT MCC/POWER PANEL
- ■ FIELD TERMINAL LOCATED AT CONTROL PANEL
- ▲ REMOTE TERMINAL
- ● DEVICE TERMINAL NO.
- ◆ PLC INTERFACE TERMINAL

NO.	DATE	REVISION	APP.

NOTES:

1. PROVIDE AUTO TRANSFER SWITCH DRY CONTACT.
2. ALL FLOAT CONTROL CIRCUIT WIRES COLOR SHALL BE YELLOW.

NOTICE:
FOR YOUR SAFETY, YOU ARE REQUIRED BY TEXAS LAW TO CALL 811 AT LEAST 48 HOURS BEFORE YOU DIG SO THAT UNDERGROUND LINES CAN BE MARKED. THIS SIGNATURE DOES NOT FULFILL YOUR OBLIGATION TO CALL 811

VERIFICATION OF PRIVATE UTILITY LINES

Date

CenterPoint Energy natural gas utilities shown. (Gas service lines are not shown). This signature not be used for conflict verification.

Signature valid for six months.

Date

CenterPoint Energy/UNDERGROUND Electrical Facilities Verification ONLY. (This signature verifies existing underground facilities – not to be used for conflict verification)

Signature valid for six months.

Date

Approved for AT&T underground conduit facilities only.
Signature valid for one year.

PAPE–DAWSON
2107 CITYWEST BLVD, 3RD FLR I HOUSTON, TX 77042 I 713.428.2400
TEXAS ENGINEERING FIRM #470 I TEXAS SURVEYING FIRM #10028800

GAI
Gupta & Associates, Inc.
CONSULTING ENGINEERING
Registration No. F-2593
302 Dennis St.
Houston, Texas 77006
Tel: 713-636-2936
Fax: 713-636-2987
email: hforouzan@guiconsulting.com

THIS DOCUMENT IS RELEASED FOR INTERIM REVIEW UNDER THE AUTHORIZATION OF HOSS FOROUZAN, P.E. (#77748) AND IS **NOT TO BE USED FOR CONSTRUCTION.**

SURVEYED BY:
PAPE–DAWSON ENGINEERS
FB NO. 24–018

CITY OF HOUSTON
HOUSTON PUBLIC WORKS

LIFT STATION REHABILITATION AND RECONSTRUCTION
BEN'S BRANCH, WOODLAND RIDGE, ELMWOOD HILLS, FOREST SHORES, TRAIL RIVER, RIVERLAWN

INSTRUMENTATION

FOREST SHORES LIFT STATION CONTROL PANEL CONTROL WIRING DIAGRAM–I

WBS NUMBER	FOR CITY OF HOUSTON USE ONLY
R–000267–0180–3	
DRAWING SCALE	
AS NOTED	
CITY OF HOUSTON PM	
BRENDA JOHNSON P.E.	
SHEET NO. XX OF XX	

FS–I–08

FILE PATH: O:\H8107_Lift Station Rehabilitation And Reconstruction (Pape Dawson)\6 Drawings\Instrumentation And Control\Working\Forest Shores\H8107_FS–I–08.dwg

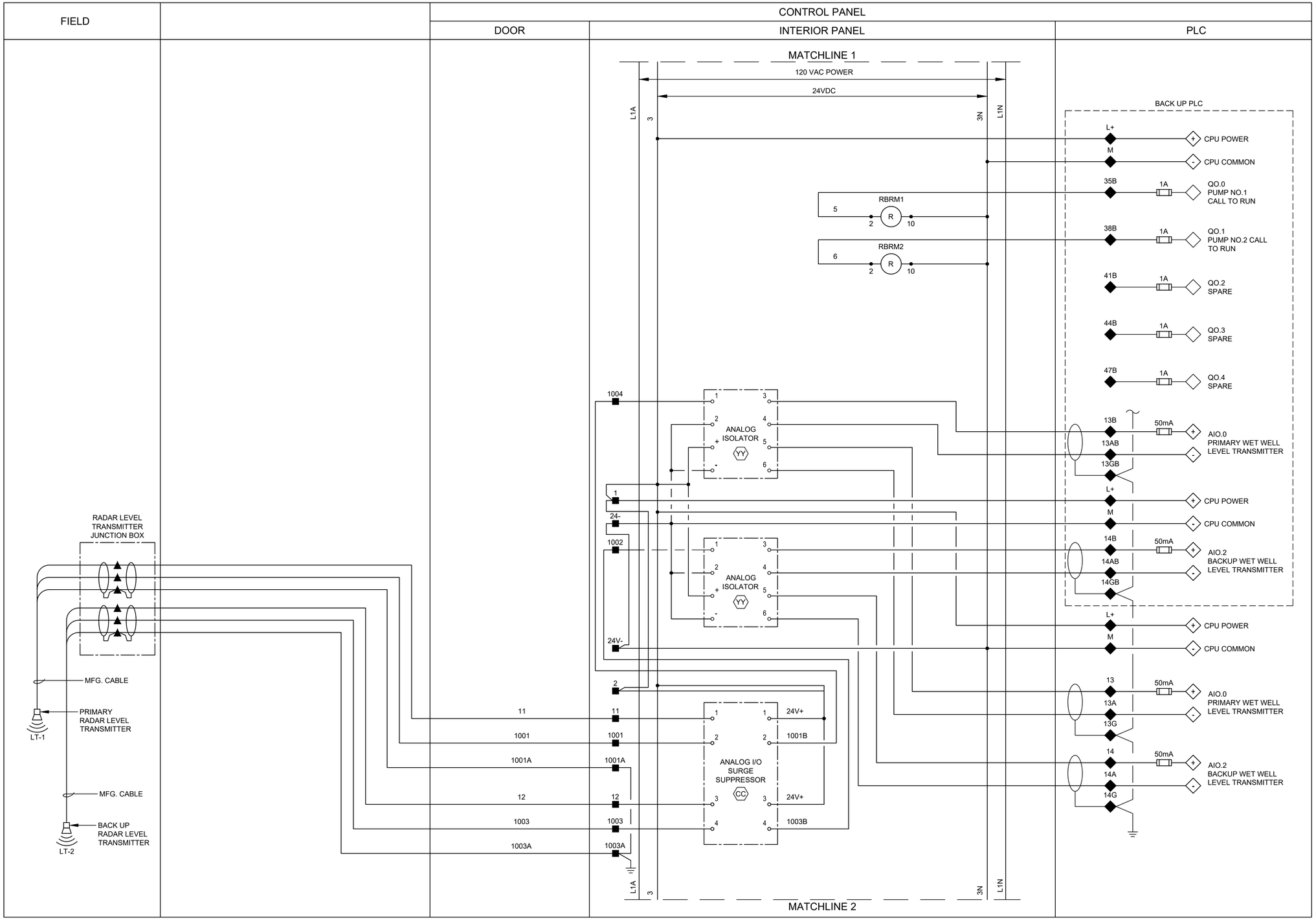

LEGEND

- △ DEVICE OR FIELD TERMINAL LOCATED AT MOTOR
- ✳ DEVICE OR FIELD TERMINAL LOCATED REMOTE
- □ DEVICE OR FIELD TERMINAL LOCATED AT MCC/POWER PANEL
- ■ FIELD TERMINAL LOCATED AT CONTROL PANEL
- ▲ REMOTE TERMINAL
- ● DEVICE TERMINAL NO.
- ◆ PLC INTERFACE TERMINAL

NO.	DATE	REVISION	APP.

NOTICE:

FOR YOUR SAFETY, YOU ARE REQUIRED BY TEXAS LAW TO CALL 811 AT LEAST 48 HOURS BEFORE YOU DIG SO THAT UNDERGROUND LINES CAN BE MARKED. THIS SIGNATURE DOES NOT FULFILL YOUR OBLIGATION TO CALL 811

VERIFICATION OF PRIVATE UTILITY LINES

Date

CenterPoint Energy natural gas utilities shown. (Gas service lines are not shown). This signature not be used for conflict verification.

Signature valid for six months.

Date

CenterPoint Energy/UNDERGROUND Electrical Facilities Verification ONLY. (This signature verifies existing underground facilities – not to be used for conflict verification)

Signature valid for six months.

Date

Approved for AT&T underground conduit facilities only. Signature valid for one year.

PAPE–DAWSON

2107 CITYWEST BLVD, 3RD FLR I HOUSTON, TX 77042 I 713.428.2400

TEXAS ENGINEERING FIRM #470 I TEXAS SURVEYING FIRM #10028800

GAI

Gupta & Associates, Inc.

CONSULTING ENGINEERING

Registration No. F-2593

302 Dennis St.

Houston, Texas 77006

Tel: 713-636-2936

Fax: 713-636-2987

email: hforouzan@gaiconsulting.com

THIS DOCUMENT IS RELEASED FOR INTERIM REVIEW UNDER THE AUTHORIZATION OF HOSS FOROUZAN, P.E. (#77748) AND IS **NOT TO BE USED FOR CONSTRUCTION.**

SURVEYED BY:

PAPE–DAWSON ENGINEERS

FB NO. 24–018

CITY OF HOUSTON

HOUSTON PUBLIC WORKS

LIFT STATION REHABILITATION AND RECONSTRUCTION
BEN'S BRANCH, WOODLAND RIDGE, ELMWOOD HILLS, FOREST SHORES, TRAIL RIVER, RIVERLAWN

INSTRUMENTATION

FOREST SHORES LIFT STATION CONTROL PANEL CONTROL WIRING DIAGRAM–II

WBS NUMBER	FOR CITY OF HOUSTON USE ONLY
R–000267–0180–3	
DRAWING SCALE	
AS NOTED	
CITY OF HOUSTON PM	
BRENDA JOHNSON P.E.	
SHEET NO. XX OF XX	

FS–I–09

FILE PATH: O:\H8107_Lift Station Rehabilitation And Reconstruction (Pape Dawson)\6 Drawings\Instrumentation And Control\Working\Forest Shores\H8107_FS–I–09.dwg

FIELD | POWER PANEL | CONTROL PANEL: DOOR | CONTROL PANEL: INTERIOR PANEL | CONTROL PANEL: PLC

MATCHLINE 2

120 VAC POWER

24VDC

L1A 3 3N L1N

L1
N
MS
MOTION SWITCH

L1
N
MS
MOTION SWITCH

17 50mA I0.0 INTRUSION ALARM

BACK UP PLC

RUV 11 9

18B 50mA I0.0 PHASE FAILURE UNDER VOLTAGE

18 18

RUV 2 R 10

50mA I0.1 PHASE FAILURE UNDER VOLTAGE

ØA ØB ØC

JE-2 PHASE MONITOR

7 8 9 10 11 12

N/C 3

M1

19
20

RFLP 2 R 10

CHEMICAL RADAR LEVEL TRANSMITTER JUNCTION BOX

13 13 24V+ 1 1

1004 1004 1004B 2 2

1004A 1004A

ANALOG I/O SURGE SUPPRESSOR

24V+ 3 3

4 4

MFG. CABLE

CHEMICAL THANK RADAR LEVEL TRANSMITTER

LT-3

15 50mA AI0.4 CHEMICAL TANK LEVEL TRANSMITTER

15A

15G

16 50mA AI0.6 SPARE

16A

16G

L1A 3 3N L1N

MATCHLINE 3

LEGEND

△ DEVICE OR FIELD TERMINAL LOCATED AT MOTOR

✳ DEVICE OR FIELD TERMINAL LOCATED REMOTE

□ DEVICE OR FIELD TERMINAL LOCATED AT MCC/POWER PANEL

■ FIELD TERMINAL LOCATED AT CONTROL PANEL

▲ REMOTE TERMINAL

● DEVICE TERMINAL NO.

◆ PLC INTERFACE TERMINAL

NO.	DATE	REVISION	APP.

NOTES:

1. PROVIDE ONE LIMIT SWITCH PER EXTERIOR CONTROL PANEL AND POWER PANEL DOOR, WIRED IN PARALLEL.

NOTICE:
FOR YOUR SAFETY, YOU ARE REQUIRED BY TEXAS LAW TO CALL 811 AT LEAST 48 HOURS BEFORE YOU DIG SO THAT UNDERGROUND LINES CAN BE MARKED. THIS SIGNATURE DOES NOT FULFILL YOUR OBLIGATION TO CALL 811

VERIFICATION OF PRIVATE UTILITY LINES

Date

CenterPoint Energy natural gas utilities shown. (Gas service lines are not shown). This signature not be used for conflict verification.

Signature valid for six months.

Date

CenterPoint Energy/UNDERGROUND Electrical Facilities Verification ONLY. (This signature verifies existing underground facilities – not to be used for conflict verification)

Signature valid for six months.

Date

Approved for AT&T underground conduit facilities only.
Signature valid for one year.

PAPE-DAWSON
2107 CITYWEST BLVD, 3RD FLR I HOUSTON, TX 77042 I 713.428.2400
TEXAS ENGINEERING FIRM #470 I TEXAS SURVEYING FIRM #10028800

GAI
Gupta & Associates, Inc.
CONSULTING ENGINEERING
Registration No. F-2593
302 Dennis St.
Houston, Texas 77006
Tel: 713-636-2936
Fax: 713-636-2987
email: hforouzan@gaiconsulting.com

SURVEYED BY:
PAPE-DAWSON ENGINEERS
FB NO. 24-018

THIS DOCUMENT IS RELEASED FOR INTERIM REVIEW UNDER THE AUTHORIZATION OF HOSS FOROUZAN, P.E. (#77748) AND IS **NOT TO BE USED FOR CONSTRUCTION.**

CITY OF HOUSTON
HOUSTON PUBLIC WORKS

LIFT STATION REHABILITATION AND RECONSTRUCTION
BEN'S BRANCH, WOODLAND RIDGE, ELMWOOD HILLS, FOREST SHORES, TRAIL RIVER, RIVERLAWN

INSTRUMENTATION

FOREST SHORES LIFT STATION CONTROL PANEL CONTROL WIRING DIAGRAM-III

WBS NUMBER	FOR CITY OF HOUSTON USE ONLY
R-000267-0180-3	
DRAWING SCALE	
AS NOTED	
CITY OF HOUSTON PM	
BRENDA JOHNSON P.E.	
SHEET NO. XX OF XX	

FS-I-10

FILE PATH: O:\H8107_Lift Station Rehabilitation And Reconstruction (Pape Dawson)\6 Drawings\Instrumentation And Control\Working\Forest Shores\H8107_FS-I-10.dwg

FIELD	POWER PANEL	CONTROL PANEL		
		DOOR	INTERIOR PANEL	PLC

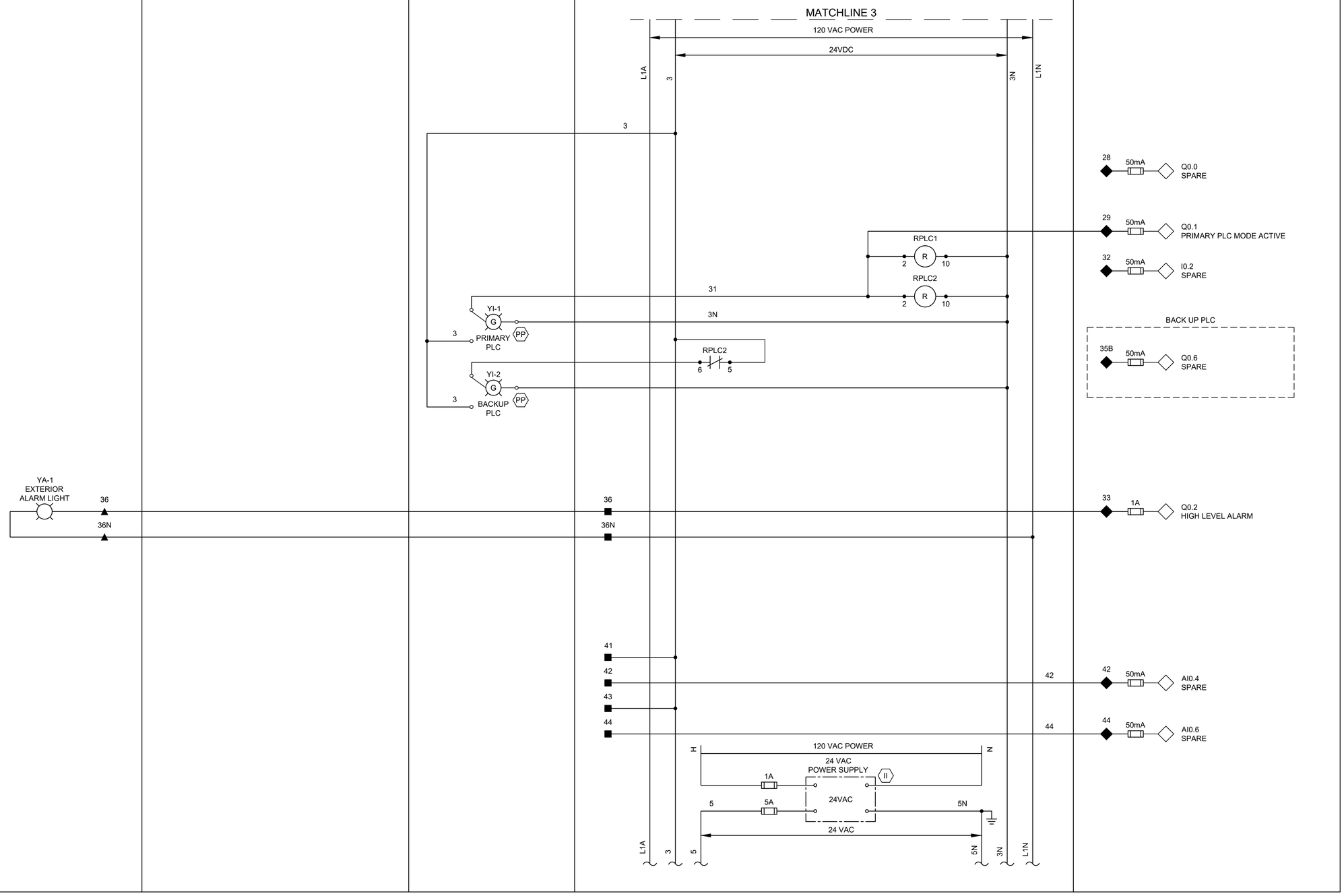

LEGEND

- △ DEVICE OR FIELD TERMINAL LOCATED AT MOTOR
- ✳ DEVICE OR FIELD TERMINAL LOCATED REMOTE
- □ DEVICE OR FIELD TERMINAL LOCATED AT MCC/POWER PANEL
- ■ FIELD TERMINAL LOCATED AT CONTROL PANEL
- ▲ REMOTE TERMINAL
- ● DEVICE TERMINAL NO.
- ◆ PLC INTERFACE TERMINAL

NO.	DATE	REVISION	APP.

NOTICE:
FOR YOUR SAFETY, YOU ARE REQUIRED BY TEXAS LAW TO CALL 811 AT LEAST 48 HOURS BEFORE YOU DIG SO THAT UNDERGROUND LINES CAN BE MARKED. THIS SIGNATURE DOES NOT FULFILL YOUR OBLIGATION TO CALL 811

VERIFICATION OF PRIVATE UTILITY LINES

Date

CenterPoint Energy natural gas utilities shown. (Gas service lines are not shown). This signature not be used for conflict verification.

Signature valid for six months.

Date

CenterPoint Energy/UNDERGROUND Electrical Facilities Verification ONLY. (This signature verifies existing underground facilities – not to be used for conflict verification)

Signature valid for six months.

Date

Approved for AT&T underground conduit facilities only.
Signature valid for one year.

PAPE–DAWSON
2107 CITYWEST BLVD, 3RD FLR I HOUSTON, TX 77042 I 713.428.2400
TEXAS ENGINEERING FIRM #470 I TEXAS SURVEYING FIRM #10028800

GAI
Gupta & Associates, Inc.
CONSULTING ENGINEERING
Registration No. F-2593
302 Dennis St.
Houston, Texas 77006
Tel: 713-636-2936
Fax: 713-636-2987
email: hforouzan@gaiconsulting.com

SURVEYED BY:
PAPE–DAWSON ENGINEERS
FB NO. 24–018

THIS DOCUMENT IS RELEASED FOR INTERIM REVIEW UNDER THE AUTHORIZATION OF HOSS FOROUZAN, P.E. (#77748) AND IS **NOT TO BE USED FOR CONSTRUCTION.**

CITY OF HOUSTON
HOUSTON PUBLIC WORKS

LIFT STATION REHABILITATION AND RECONSTRUCTION
BEN'S BRANCH, WOODLAND RIDGE, ELMWOOD HILLS, FOREST SHORES, TRAIL RIVER, RIVERLAWN

INSTRUMENTATION

FOREST SHORES LIFT STATION CONTROL PANEL CONTROL WIRING DIAGRAM–IV

WBS NUMBER	FOR CITY OF HOUSTON USE ONLY
R–000267–0180–3	
DRAWING SCALE	
AS NOTED	
CITY OF HOUSTON PM	
BRENDA JOHNSON P.E.	
SHEET NO. XX OF XX	

FS–I–11

FILE PATH: O:\H8107_Lift Station Rehabilitation And Reconstruction (Pape Dawson)\6 Drawings\Instrumentation And Control\Working\Forest Shores\H8107_FS–I–11.dwg

FILE PATH: O:\H8107_Lift Station Rehabilitation And Reconstruction (Pape Dawson)\6 Drawings\Instrumentation And Control\Working\Forest Shores\H8107_FS-I-12.dwg

FIELD | POWER PANEL | CONTROL PANEL — DOOR | INTERIOR PANEL | PLC

120 VAC POWER
24 VDC
24 VAC
JE-2
TBP1 SEE NOTE 2
L1A
L1N
3N
5N
15
15N

TSH-1 MOTOR TEMP SWITCH
LSH-1 SEAL LEAK DETECTOR
HS-1A RESET
TO SHEET FS-I-13
3P1
M1
PUMP NO. 1 PROTECTION MODULE
LAH-1 SL1
TAH-1 MTH1
RRST1
TO SHEET I-13
RMSL1
RMTH1
TDFRM1
RFS1
RMOR1
RPLC1
RBRM1
RPLM1
TDFRM1

PUMP NO.1
TERMINAL JUNCTION BOX
REFER TO SHEET FS-E-04
CT
MOR1
4-20mA CURRENT TRANSDUCER
IE-1
MOTOR OVERLOAD RELAY (MOR) (SEE NOTE 1)

HS-1 H-O-A
ZS-1
YI-1
RUN

103	1A	Q0.4 ALARM RESET
104	50mA	I0.6 ALARM RESET
109	50mA	I1.1 PUMP NO.1 HIGH TEMP ALARM
122	50mA	AI0.8 PUMP NO.1 MOTOR CURRENT
123	50mA	I3.3 PUMP NO.1 MOTOR OVERLOAD
115	50mA	I3.0 PUMP NO.1 IN HAND
121	50mA	I3.1 PUMP NO.1 IN AUTO
118	1A	Q0.7 PUMP NO.1 PLC START/STOP
120	50mA	I1.0 PUMP NO.1 RUN
110	50mA	I3.2 PUMP NO.1 SEAL FAILURE ALARM

LEGEND

- △ DEVICE OR FIELD TERMINAL LOCATED AT MOTOR
- ✳ DEVICE OR FIELD TERMINAL LOCATED REMOTE
- □ DEVICE OR FIELD TERMINAL LOCATED AT MCC/POWER PANEL
- ■ FIELD TERMINAL LOCATED AT CONTROL PANEL
- ▲ REMOTE TERMINAL
- ● DEVICE TERMINAL NO.
- ◆ PLC INTERFACE TERMINAL

NO.	DATE	REVISION	APP.

NOTES:

1. MOTOR OVERLOAD RELAY OUTPUT CONTACT SHOWN IS NORMALLY CLOSED WHEN RELAY IS DE-ENERGIZED, OPEN WHEN ENERGIZED, AND CLOSED WHEN IN ALARM. VERIFY OPERATION OF RELAY PROVIDED AND ADJUST CONNECTION OF RMOR AUXILIARY RELAYS.
2. FUSED TERMINAL ON TERMINAL BLOCK TB4 SEE CONTROL POWER AND COMMUNICATION WIRING DIAGRAM DRAWING NO. FS-I-03.
3. ALL FLOAT CONTROL CIRCUIT WIRES COLOR SHALL BE YELLOW.

NOTICE:
FOR YOUR SAFETY, YOU ARE REQUIRED BY TEXAS LAW TO CALL 811 AT LEAST 48 HOURS BEFORE YOU DIG SO THAT UNDERGROUND LINES CAN BE MARKED. THIS SIGNATURE DOES NOT FULFILL YOUR OBLIGATION TO CALL 811

VERIFICATION OF PRIVATE UTILITY LINES

Date

CenterPoint Energy natural gas utilities shown. (Gas service lines are not shown). This signature not be used for conflict verification.

Signature valid for six months.

Date

CenterPoint Energy/UNDERGROUND Electrical Facilities Verification ONLY. (This signature verifies existing underground facilities – not to be used for conflict verification)

Signature valid for six months.

Date

Approved for AT&T underground conduit facilities only.
Signature valid for one year.

PAPE–DAWSON
2107 CITYWEST BLVD, 3RD FLR I HOUSTON, TX 77042 I 713.428.2400
TEXAS ENGINEERING FIRM #470 I TEXAS SURVEYING FIRM #10028800

GAI
Gupta & Associates, Inc.
CONSULTING ENGINEERING
Registration No. F-2593
302 Dennis St.
Houston, Texas 77006
Tel: 713-636-2936
Fax: 713-636-2987
email: hforouzan@guiconsulting.com

SURVEYED BY:
PAPE–DAWSON ENGINEERS
FB NO. 24–018

THIS DOCUMENT IS RELEASED FOR INTERIM REVIEW UNDER THE AUTHORIZATION OF HOSS FOROUZAN, P.E. (#77748) AND IS **NOT TO BE USED FOR CONSTRUCTION.**

CITY OF HOUSTON
HOUSTON PUBLIC WORKS

LIFT STATION REHABILITATION AND RECONSTRUCTION
BEN'S BRANCH, WOODLAND RIDGE, ELMWOOD HILLS, FOREST SHORES, TRAIL RIVER, RIVERLAWN

INSTRUMENTATION

FOREST SHORES LIFT STATION PUMP NO.1 CONTROL WIRING DIAGRAM

WBS NUMBER	FOR CITY OF HOUSTON USE ONLY
R–000267–0180–3	
DRAWING SCALE	
AS NOTED	
CITY OF HOUSTON PM	
BRENDA JOHNSON P.E.	
SHEET NO. XX OF XX	

FS–I–12

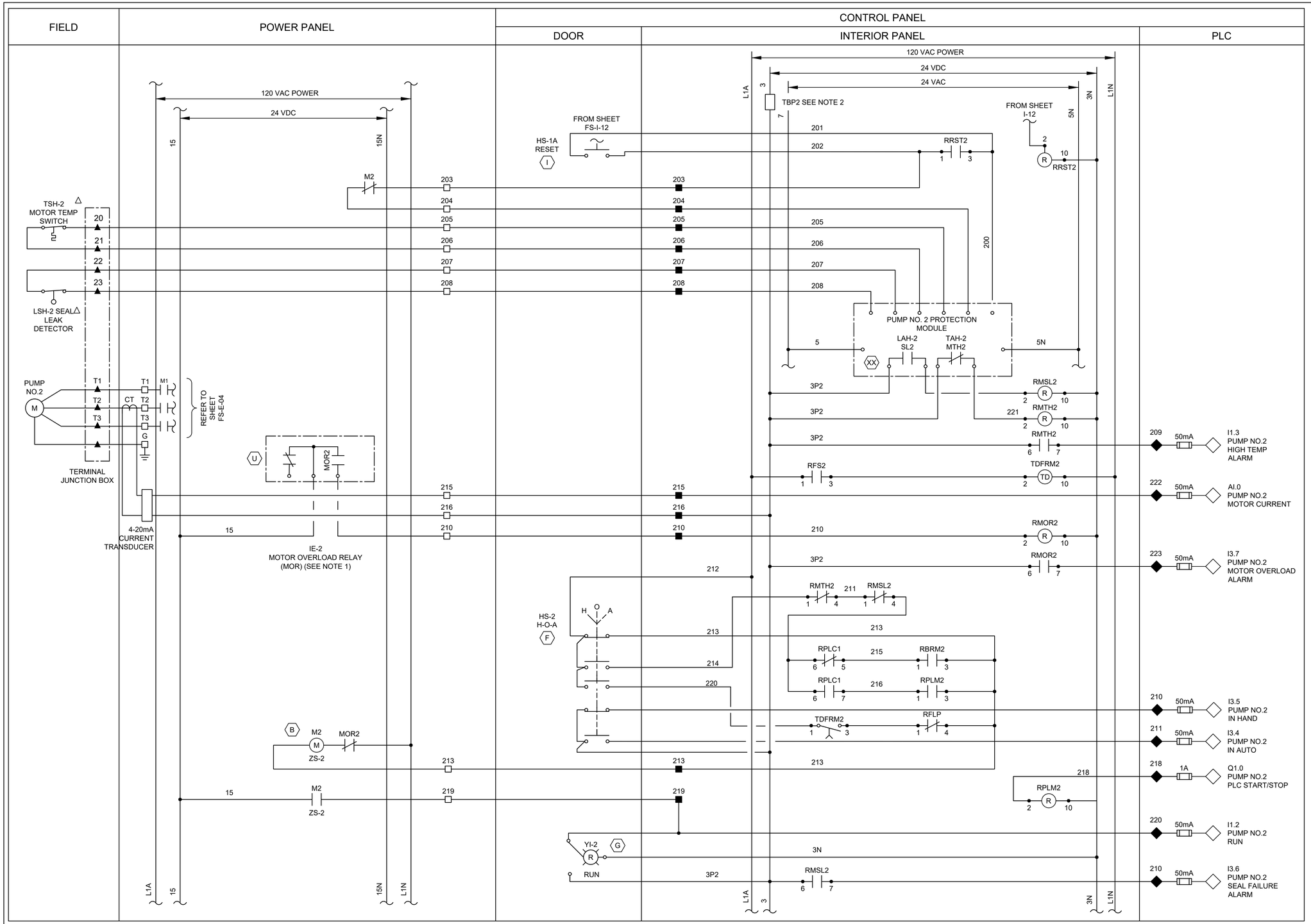

LEGEND

- △ DEVICE OR FIELD TERMINAL LOCATED AT MOTOR
- ✳ DEVICE OR FIELD TERMINAL LOCATED REMOTE
- □ DEVICE OR FIELD TERMINAL LOCATED AT MCC/POWER PANEL
- ■ FIELD TERMINAL LOCATED AT CONTROL PANEL
- ▲ REMOTE TERMINAL
- ● DEVICE TERMINAL NO.
- ◆ PLC INTERFACE TERMINAL

NOTES:

1. MOTOR OVERLOAD RELAY OUTPUT CONTACT SHOWN IS NORMALLY CLOSED WHEN RELAY IS DE-ENERGIZED, OPEN WHEN ENERGIZED, AND CLOSED WHEN IN ALARM. VERIFY OPERATION OF RELAY PROVIDED AND ADJUST CONNECTION OF RMOR AUXILIARY RELAYS.
2. FUSED TERMINAL ON TERMINAL BLOCK TB4 SEE CONTROL POWER AND COMMUNICATION WIRING DIAGRAM DRAWING NO. FS-I-03.
3. ALL FLOAT CONTROL CIRCUIT WIRES COLOR SHALL BE YELLOW.

NOTICE:
FOR YOUR SAFETY, YOU ARE REQUIRED BY TEXAS LAW TO CALL 811 AT LEAST 48 HOURS BEFORE YOU DIG SO THAT UNDERGROUND LINES CAN BE MARKED. THIS SIGNATURE DOES NOT FULFILL YOUR OBLIGATION TO CALL 811

VERIFICATION OF PRIVATE UTILITY LINES

Date

CenterPoint Energy natural gas utilities shown. (Gas service lines are not shown). This signature not be used for conflict verification.

Signature valid for six months.

Date

CenterPoint Energy/UNDERGROUND Electrical Facilities Verification ONLY. (This signature verifies existing underground facilities – not to be used for conflict verification)

Signature valid for six months.

Date

Approved for AT&T underground conduit facilities only. Signature valid for one year.

PAPE–DAWSON
2107 CITYWEST BLVD, 3RD FLR I HOUSTON, TX 77042 I 713.428.2400
TEXAS ENGINEERING FIRM #470 I TEXAS SURVEYING FIRM #10028800

GAI
Gupta & Associates, Inc.
CONSULTING ENGINEERING
Registration No. F-2593
302 Dennis St.
Houston, Texas 77006
Tel: 713-636-2936
Fax: 713-636-2987
email: hforouzan@gaiconsulting.com

THIS DOCUMENT IS RELEASED FOR INTERIM REVIEW UNDER THE AUTHORIZATION OF HOSS FOROUZAN, P.E. (#77748) AND IS **NOT TO BE USED FOR CONSTRUCTION.**

SURVEYED BY:
PAPE–DAWSON ENGINEERS
FB NO. 24–018

CITY OF HOUSTON
HOUSTON PUBLIC WORKS

LIFT STATION REHABILITATION AND RECONSTRUCTION
BEN'S BRANCH, WOODLAND RIDGE, ELMWOOD HILLS, FOREST SHORES, TRAIL RIVER, RIVERLAWN

INSTRUMENTATION

FOREST SHORES LIFT STATION PUMP NO.2 CONTROL WIRING DIAGRAM

WBS NUMBER	FOR CITY OF HOUSTON USE ONLY
R–000267–0180–3	
DRAWING SCALE	
AS NOTED	
CITY OF HOUSTON PM	
BRENDA JOHNSON P.E.	
SHEET NO. XX OF XX	

FS–I–13

NO.	DATE	REVISION	APP.

FILE PATH: O:\H8107_Lift Station Rehabilitation And Reconstruction (Pape Dawson)\6 Drawings\Instrumentation And Control\Working\Forest Shores\H8107_FS–I–13.dwg

NOTE:
1. THIS SITE PLAN WAS DEVELOPED FROM ORIGINAL CONSTRUCTION DRAWINGS, RECENT TOPOGRAPHICAL SURVEY, AND FIELD OBSERVATIONS. SOME BURIED ITTEMS MAY EXST ELSEWHERE, THEREFORE THE CONTRACTOR MUST FIELD VERIFY ALL UTLITIES AND STRUCTURE PRIOR TO CONSTRUCTION. SUBSURFACE ELECTRICAL ITEMS ARE SHOWN ON THE ELECTRICAL SITE PLAN (SEE SHEET ___)
2. SEE PROPERTY BOUNDARY COORDINATES SHEET RL-C-03
3. CONTRACTOR TO RE-ESTABLISH TBMS PRIOR TO DEMOLITION FOR ELEVATION CONTROL.

SUMMARY TABLE	
LIFT STATION NAME	RIVERLAWN
LIFT STATION NUMBER	524
ADDRESS	3326 RIVERLAWN DRIVE
KEY MAP	336D

FLOODPLAIN TABLE	
FREQUENCY	WATER SURFACE ELEVATION, FT
500-YR	63.2'
100-YR	58.0'
HARVEY	70.6'

TEMPORARY BENCHMARK DESCRIPTION

TBM-560 CUT "X" IN CONCRETE INLET TOP - ELEVATION 66.17'
TBM-561 CUT "X" IN CONCRETE PAD - ELEVATION 68.37'

LEGEND

- DRAINAGE DIRECTION
- FLOW DIRECTION
- EXISTING PAVEMENT
- EXISTING GRASS AREA

SCALE: 1"= 5'
0' 5' 10' 15'

NO.	DATE	REVISION	APP.

RIVERLAWN DRIVE
(60' R.O.W.)

EXST 6" AC WL
EXST GAS LINES
EXST 12" DIP FM
EXST SAN SWR MH
RIM EL = 67.41'
24" (S) FL = 52.78'
24" (W) FL = 52.81'
EXST 24" VCP SAN SWR @ 0.08% SLOPE
EXST 15" OAK TREE
EXST 4' STM SWR MH
24" (N) FL = 67.69'
24" (E) FL = 62.19'
24" (S) FL = 59.64'
12" (W) FL = 62.89'
EXST 24" RCP STM SWR
10' CONC DWY
16' UE
10' UE
EXST 10" OAK TREE
EXST 24" VCP SAN SWR @ 0.08% SLOPE
EXST CONC. DRIVEWAY (APPROX. 661 SQ FT)
25' BLDG LINE
EXST PEDESTRIAN GATE
24" VCP FL = 52.76'
20' SSE
GREENBELT RESERVE "C" VOL. 223, PG 1 HCMR
EXST GRASS AREA (APPROX. 430 SQ FT)
LS BOUNDARY
EXST INSPECTION HATCH
EXST WET WELL (APPROX. 21'X4')
TBM-561
EXST DRY PIT (APPROX 21'X11')
EXST DRY PIT VENT (TYP 2)
EXST SERVICE LIGHT
EXST 14' SWING GATE
EXST GAS LINES
RICHARD & JUDITH KIRKEEIDE HCCF NO. P501342
EXST CONC. WALKWAY (TYP 2)
EXST DRY PIT ACCESS HATCH
EXST UGND ELEC. LINES
EXST UTLITY POLE
EXST ELEC. BOX
EXST PUMP ACCESS HATCH
EXST BACKFLOW PREVENTOR
EXST WOOD FENCE (APPROX 130 LF)
LS BOUNDARY
EXST METAL CAMERA POLE
EXST OH ELEC. LINES
LS BOUNDARY
BEAR BRANCH TRAIL ASSOCIATION HCCF NO. F425990

NOTICE:
FOR YOUR SAFETY, YOU ARE REQUIRED BY TEXAS LAW TO CALL 811 AT LEAST 48 HOURS BEFORE YOU DIG SO THAT UNDERGROUND LINES CAN BE MARKED. THIS SIGNATURE DOES NOT FULFILL YOUR OBLIGATION TO CALL 811

VERIFICATION OF PRIVATE UTILITY LINES

Date

CenterPoint Energy natural gas utilities shown. (Gas service lines are not shown). This signature not be used for conflict verification.

Signature valid for six months.

Date

CenterPoint Energy/UNDERGROUND Electrical Facilities Verification ONLY. (This signature verifies existing underground facilities - not to be used for conflict verification)

Signature valid for six months.

Date

Approved for AT&T underground conduit facilities only.
Signature valid for one year.

PAPE-DAWSON
2107 CITYWEST BLVD, 3RD FLR I HOUSTON, TX 77042 I 713.428.2400
TEXAS ENGINEERING FIRM #470 I TEXAS SURVEYING FIRM #10028800

PAPE-DAWSON
2107 CITYWEST BOULEVARD
3RD FLR
HOUSTON, TEXAS 77402
713-428-2400
TX FIRM #470

SURVEYED BY:
PAPE-DAWSON
FB NO. 24-018

THIS DOCUMENT IS RELEASED FOR INTERIM REVIEW UNDER THE AUTHORIZATION OF AMIRHOSSEIN SHOKOUHI, P.E. (#139835) AND IS **NOT TO BE USED FOR CONSTRUCTION.**

CITY OF HOUSTON
HOUSTON PUBLIC WORKS

LIFT STATION REHABILITATION AND RECONSTRUCTION
BEN'S BRANCH, WOODLAND RIDGE, ELMWOOD HILLS, FOREST SHORES, TRAIL RIVER, RIVERLAWN

CIVIL

RIVERLAWN LIFT STATION EXISTING SITE PLAN & YARD PIPING

WBS NUMBER	FOR CITY OF HOUSTON USE ONLY
R-000267-0180-3	
DRAWING SCALE	
AS NOTED	
CITY OF HOUSTON PM	
BRENDA JOHNSON P.E.	
SHEET NO. 295 OF 338	

RL-C-01

FILE PATH: K:\Projects\423\77 COH LS Package\00\03 CADD\Plans\Sheets\08 RiverLawn\RL Existing Yard Piping.dwg

NOTE:

1. THE SOUND PRODUCED BY THE ERECTION, EXCAVATION, CONSTRUCTION, OR DEMOLITION OF ANY BUILDING OR STRUCTURE, INCLUDING THE USE OF ANY NECESSARY TOOLS OR EQUIPMENT, CONDUCTED BETWEEN THE HOURS OF 7 A.M. AND 8 P.M. SHALL NOT PRODUCE A SOUND EXCEEDING 85 DB(A) WHEN MEASURED FROM THE PROPERTY LINE OF THE RESIDENTIAL PROPERTY WHERE THE SOUND IS BEING RECEIVED.
2. PER SECTION 01145S, THE CITY OF HOUSTON TO HAVE REFUSAL RIGHTS TO RETAIN ALL ITEMS SHOWN TO BE DEMOLISHED AND/OR REMOVED.

TEMPORARY BENCHMARK DESCRIPTION

TBM–560 CUT "X" IN CONCRETE INLET TOP – ELEVATION 66.17'
TBM–561 CUT "X" IN CONCRETE PAD – ELEVATION 68.37'

LEGEND

TO BE REMOVED

NO.	DATE	REVISION	APP.

SCALE: 1"= 4'
0' 4' 8' 12'

REMOVE EXST WATER METER
EXST SAN SWR MH
RIM EL = 67.41'
REMOVE EXST 24" SAN SWR MH
EXST 24" VCP SAN SWR @ 0.08% SLOPE
REMOVE EXST SAN SWR
LS BOUNDARY
EXST STM SWR MH
REMOVE EXST 10" OAK TREE
REMOVE EXST ELECTRICAL BOX
REMOVE EXST PUMP ACCESS HATCH
REMOVE EXST ELECTRICAL UTILITY POLE
REMOVE EXST WOODEN FENCE
REMOVE EXST DRY PIT VENT
EXST 10" OAK TREE
EXST 24" VCP SAN SWR @ 0.08% SLOPE
REMOVE EXST 24" SAN SWR
LS BOUNDARY
REMOVE EXST DRY PIT ACCESS HATCH
REMOVE EXST PEDESTRIAN SWING GATE
REMOVE EXST 10" OAK TREE
REMOVE EXST DRY PIT VENT
REMOVE EXST 12' WIDE CONC DRIVEWAY
EXST REMOVE EXST CONC WALKWAY
24" VCP FL = 52.76'
REMOVE EXST DRY PIT & WET WELL CONC TOP SLAB
EXST GRASS AREA (APPROX. 430 SQ FT)
50' BLDG LINE
REMOVE EXST CONC WALKWAYS
TBM–561
REMOVE EXST 12" FM (INSIDE LS BOUNDARY)
REMOVE EXST WOODEN FENCE
EXST
REMOVE WET WELL INSPECTION MH (APPROX. 21'X4')
REMOVE EXST WET WELL CONC TOP SLAB (APPROX 21'X11')
LS BOUNDARY
REMOVE EXST DRY PIT CONC TOP SLAB
EXST VENT (TYP 2)
EXST REMOVE EXST DRY PIT ACCESS HATCH
EXST CONC. WALKWAY (TYP 2)
EXST REMOVE EXST SERVICE LIGHT
DRY PIT HATCH
REMOVE EXST DRY PIT ACCESS HATCH
EXST UTILITY POLE
EXST REMOVE EXST ELEC. CONTROL PANEL
REMOVE EXST UTILITY POLE
EXST PUMP ACCESS H REMOVE EXST CONC WALKWAY
EXST WOOD FENCE (APPROX 130 LF)
REMOVE EXST DRY PIT ACCESS HATCH
EXST METAL CAMERA POLE
LS BOUNDARY
OH ELEC. LINES
REMOVE EXST BACKFLOW PREVENTER AND HOSE BIBB
20' SAN SWR ESMT
16' UE

NOTE:

1. CONTRACTOR TO RE–ESTABLISH TBMS PRIOR TO DEMOLITION FOR ELEVATION CONTROL.
2. SEE ELECTRICAL SHEETS FOR ELECTRICAL DEMOLITION.
3. THE SOUND PRODUCED BY THE ERECTION, EXCAVATION, CONSTRUCTION, OR DEMOLITION OF ANY BUILDING OR STRUCTURE, INCLUDING THE USE OF ANY EQUIPMENT, CONDUCTED BETWEEN THE HOURS OF 7 A.M. AND 8 P.M., SHALL NOT PRODUCE A SOUND EXCEEDING 85 DB(A) WHEN MEASURED FROM THE PROPERTY LINE OF THE RESIDENTIAL PROPERTY WHERE THE SOUND IS BEING RECEIVED.
4. PER SECTION 01145S, THE CITY OF HOUSTON TO HAVE FIRST REFUSAL RIGHTS TO RETAIN ALL ITEMS SHOWN TO BE DEMOLISHED AND/OR REMOVED.

NOTICE:
FOR YOUR SAFETY, YOU ARE REQUIRED BY TEXAS LAW TO CALL 811 AT LEAST 48 HOURS BEFORE YOU DIG SO THAT UNDERGROUND LINES CAN BE MARKED. THIS SIGNATURE DOES NOT FULFILL YOUR OBLIGATION TO CALL 811

VERIFICATION OF PRIVATE UTILITY LINES

Date

CenterPoint Energy natural gas utilities shown. (Gas service lines are not shown). This signature not be used for conflict verification.

Signature valid for six months.

Date

CenterPoint Energy/UNDERGROUND Electrical Facilities Verification ONLY. (This signature verifies existing underground facilities – not to be used for conflict verification)

Signature valid for six months.

Date

Approved for AT&T underground conduit facilities only.
Signature valid for one year.

PAPE–DAWSON
2107 CITYWEST BLVD, 3RD FLR I HOUSTON, TX 77042 I 713.428.2400
TEXAS ENGINEERING FIRM #470 I TEXAS SURVEYING FIRM #10028800

PAPE–DAWSON
2107 CITYWEST BOULEVARD
3RD FLR
HOUSTON, TEXAS 77402
713–428–2400
TX FIRM #470

SURVEYED BY:
PAPE–DAWSON
FB NO. 24–018

THIS DOCUMENT IS RELEASED FOR INTERIM REVIEW UNDER THE AUTHORIZATION OF AMIRHOSSEIN SHOKOUHI, P.E. (#139835) AND IS **NOT TO BE USED FOR CONSTRUCTION.**

CITY OF HOUSTON
HOUSTON PUBLIC WORKS

LIFT STATION REHABILITATION AND RECONSTRUCTION
BEN'S BRANCH, WOODLAND RIDGE, ELMWOOD HILLS, FOREST SHORES, TRAIL RIVER, RIVERLAWN

CIVIL

RIVERLAWN LIFT STATION DEMOLITION PLAN

WBS NUMBER	FOR CITY OF HOUSTON USE ONLY
R–000267–0180–3	
DRAWING SCALE	
AS NOTED	
CITY OF HOUSTON PM	
BRENDA JOHNSON P.E.	
SHEET NO. 296 OF 338	

RL–C–02

FILE PATH: K:\Projects\423\77 COH LS Package\00\03 CADD\Plans\Sheets\08 RiverLawn\RL DEMO PLAN.dwg

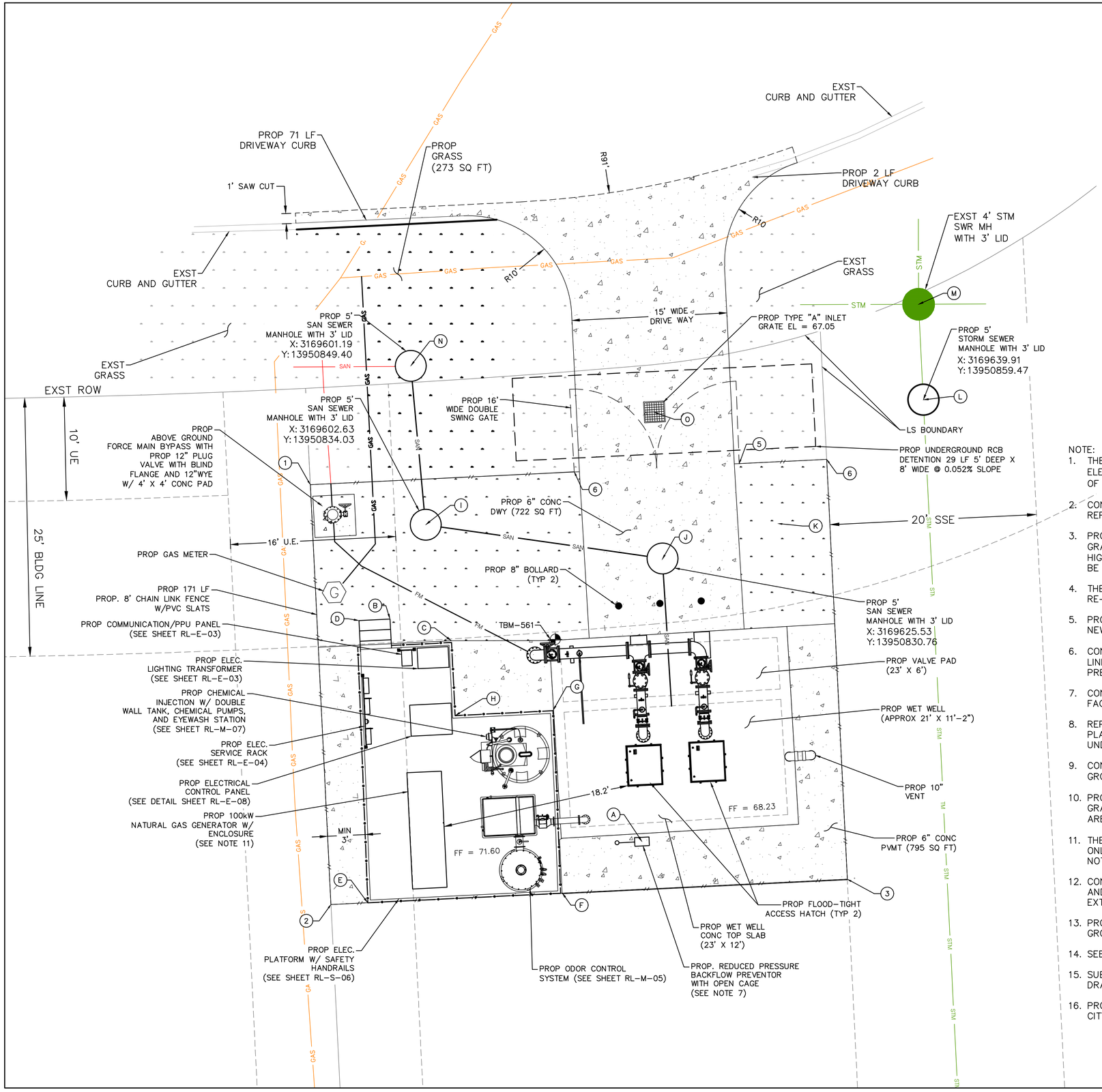

PROPERTY COORDINATION				
POINT #	PROPOSED ELEVATIONS	EXIST ELEVATION	NORTHING	EASTING
1	67.51	67.51	13950837.91	3169591.48
2	66.33	66.33	13950797.29	3169593.48
3	67.17	67.17	13950799.75	3169643.42
4	67.01	67.01	13950840.36	3169641.42
5	67.11	67.11	13950839.94	3169632.96
6	67.27	67.27	13950839.16	3169617.01

STRUCTURE COORDINATION				
POINT #	PROPOSED ELEVATIONS	EXIST ELEVATION	NORTHING	EASTING
A	68.17	68.17	13950803.38	3169623.56
B	67.35	67.35	13950825.52	3169599.28
C	67.51	67.51	13950822.81	3169605.12
D	67.70	67.70	13950825.33	3169595.29
E	66.55	66.55	13950797.66	3169596.65
F	67.62	67.62	13950798.43	3169615.84
G	67.73	67.73	13950816.58	3169614.94
H	67.40	67.40	13950816.11	3169605.46
I	67.28	67.28	13950834.03	3169602.63
J	67.37	67.37	13950830.76	3169625.53
K	66.60	66.60	13950834.15	3169636.72
L	67.12	67.12	13950846.13	3169650.77
M	67.69	67.69	13950855.37	3169650.31
N	67.53	67.53	13950849.40	3169601.19
O	67.05	67.05	13950844.97	3169624.73

NOTE:
1. THE ELEVATED ELECTRICAL/GENERATOR TO BE INSTALLED AT ELEVATION OF 71.6' (2.6 FT HIGHER THAN GROUND ELEVATION OF 69.0')
2. CONTRACTOR SHALL BE RESPONSIBLE FOR REPAIRING AND REPAVING ANY PORTION OF CONC ACCESS ROAD AND PAVING.
3. PROP SAN MANHOLE RIM ELEVATION PRIOR THE WET WELL GRADE AND ALL OTHER MANHOLE RIM ELEVATIONS WILL BE 6" HIGHER THAN GROUND ELEVATIONS. ALL MANHOLES LIDS TO BE FLOOD-TIGHT.
4. THE PROP WET WELL INTERIOR WALLS AND CEILING TO BE RE-COATED WITH COH WWO APPROVED MATERIAL.
5. PROP WET WELL TOP SLAB TO BE REPLACED TO ACCOMODATE NEW OPENINGS AND FLOOD-TIGHT ACCESS HATCHES.
6. CONTRACTOR TO LOCATE THE EXST 3/4" POTABLE WATER LINE INSIDE THE SITE AND CONNECT TO PROP BACK FLOW PREVENTER.
7. CONTRACTOR TO EXTEND POTABLE WATER LINE INSIDE FACILITY AND CONNECT TO PROP EYEWASH STATION.
8. REPAIR THE EXITING CONC UNDER THE PROP ELECTRICAL PLATFORM AT THE SAME GRADE AND ELEVATION. NO UNDERGROUND DETENTION IS NEEDED FOR THIS PORTION.
9. CONTRACTOR TO BACK FILL THE EXST WET WELL WITH GROUT/CLEAN BANK SAND (SEE SHEET SX)
10. PROP MANHOLE RIMS LOCATED AT THE DRIVEWAY TO BE AT GRADE ELEVATION AND MANHOLE RIMS LOCATED IN GRASS AREA TO BE 3" ABOVE NATURAL GROUND ELEVATION.
11. THE GENERATOR WILL BE USED IN EMERGENCY AND TESTING ONLY. CHAPTER 30 NOISE AND SOUNDS LEVEL REGULATIONS NOT APPLICABLE.
12. CONTRACTOR TO FIELD VERIFY THE EXST NATURAL GAS LINE AND TAP THE PROP NATURAL GAS LINE TO THE EXST LINE, EXTEND TO THE FACILITY AND CONNECT TO THE GAS METER.
13. PROP NATURAL GAS LINE TO BE INSTALLED 3 FT BELOW GROUND
14. SEE SHEET C4 FOR YARD PIPING DETAIL
15. SUBSURFACE DRAINAGE SYSTEMS ARE REQUIRED TO BE DRAINED IN 48 HOURS.
16. PROP UNDERGROUND DETENTION BOX TO BE MAINTAINED BY CITY OF HOUSTON WASTEWATER OPERATIONS

TEMPORARY BENCHMARK DESCRIPTION

TBM-560 CUT "X" IN CONCRETE INLET TOP - ELEVATION 66.17'
TBM-561 CUT "X" IN CONCRETE PAD - ELEVATION 68.37'

LEGEND

- EXISTING PAVEMENT
- EXISTING GRASS AREA
- PROPOSED PAVEMENT
- PROPOSED GRASS AREA

SCALE: 1"= 5'

0' 5' 10' 15'

NOTICE:
FOR YOUR SAFETY, YOU ARE REQUIRED BY TEXAS LAW TO CALL 811 AT LEAST 48 HOURS BEFORE YOU DIG SO THAT UNDERGROUND LINES CAN BE MARKED. THIS SIGNATURE DOES NOT FULFILL YOUR OBLIGATION TO CALL 811

VERIFICATION OF PRIVATE UTILITY LINES

Date

CenterPoint Energy natural gas utilities shown. (Gas service lines are not shown). This signature not be used for conflict verification.

Signature valid for six months.

Date

CenterPoint Energy/UNDERGROUND Electrical Facilities Verification ONLY. (This signature verifies existing underground facilities - not to be used for conflict verification)

Signature valid for six months.

Date

Approved for AT&T underground conduit facilities only.
Signature valid for one year.

PAPE-DAWSON
2107 CITYWEST BLVD, 3RD FLR I HOUSTON, TX 77042 I 713.428.2400
TEXAS ENGINEERING FIRM #470 I TEXAS SURVEYING FIRM #10028800

PAPE-DAWSON
2107 CITYWEST BOULEVARD
3RD FLR
HOUSTON, TEXAS 77402
713-428-2400
TX FIRM #470

SURVEYED BY:
PAPE-DAWSON
FB NO. 24-018

THIS DOCUMENT IS RELEASED FOR INTERIM REVIEW UNDER THE AUTHORIZATION OF AMIRHOSSEIN SHOKOUHI, P.E. (#139835) AND IS **NOT TO BE USED FOR CONSTRUCTION.**

CITY OF HOUSTON
HOUSTON PUBLIC WORKS

LIFT STATION REHABILITATION AND RECONSTRUCTION
BEN'S BRANCH, WOODLAND RIDGE, ELMWOOD HILLS, FOREST SHORES, TRAIL RIVER, RIVERLAWN

CIVIL

RIVERLAWN LIFT STATION PROPOSED SITE PLAN

WBS NUMBER	FOR CITY OF HOUSTON USE ONLY
R-000267-0180-3	
DRAWING SCALE	
AS NOTED	
CITY OF HOUSTON PM	
BRENDA JOHNSON P.E.	
SHEET NO. 297 OF 338	

RL-C-03

NO.	DATE	REVISION	APP.

FILE PATH: K:\Projects\423\77 COH LS Package\00\03 CADD\Plans\Sheets\08 RiverLawn\LAYOUT-C-4237700.dwg

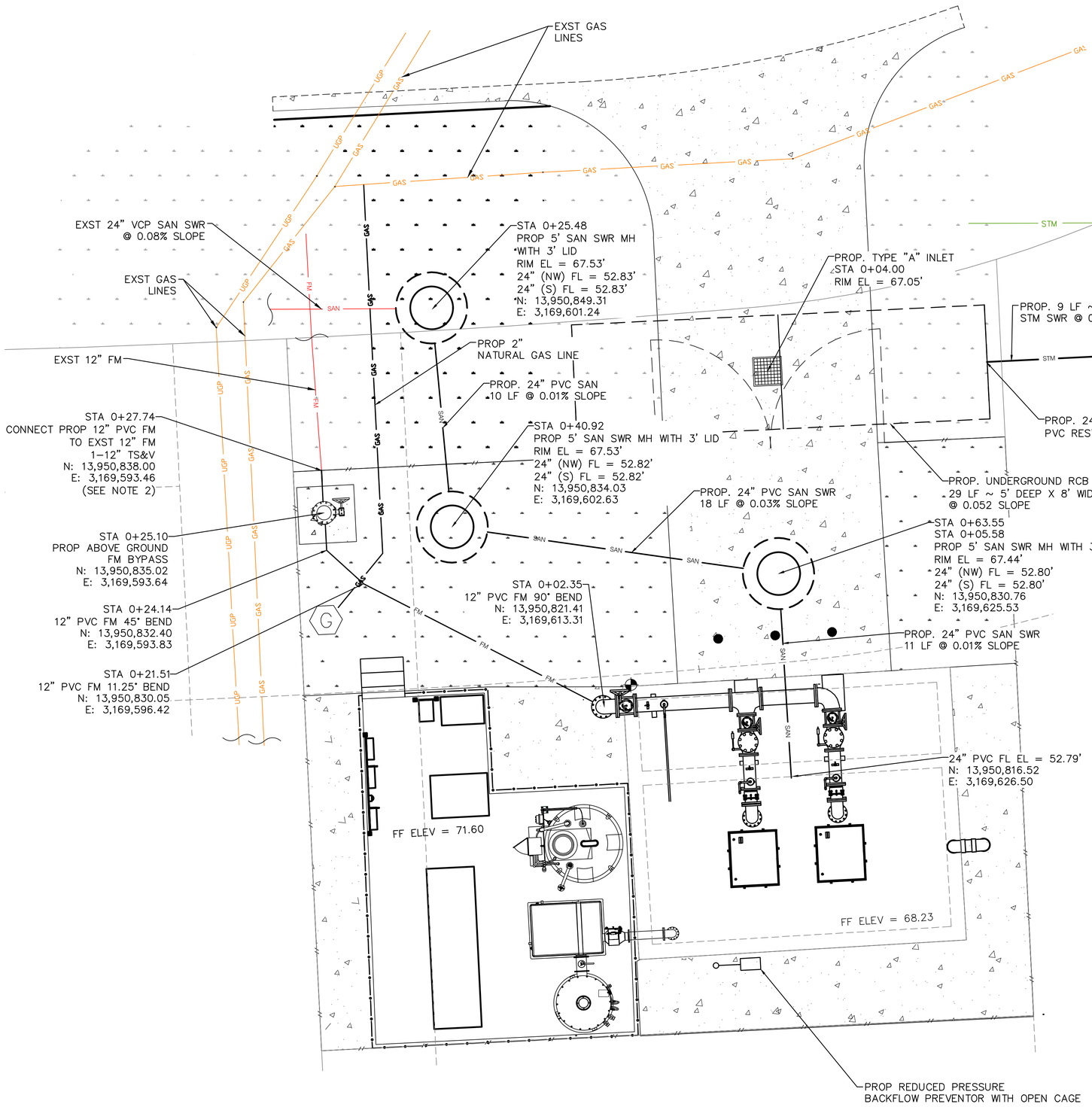

NOTE:

1. CONTRACTOR TO FIELD VERIFY THE EXISTING 12" FORCE MAIN FLOWLINE ELEVATION AT STA XXXX AND CONNECT TO THE PROP FORCE MAIN ABOVE GROUND BYPASS ASSEMBLY.
2. CONTRACTOR TO LOCATE THE EXISTING 24' SAN SWR AT STA 0+25.48 AND CONNECT TO THE PROP 5' MH.
3. CONTRACTOR TO LOCATE THE EXISTING 24" STM SWR AT STA 0+18.62 AND CONNECT TO PROP 5' MH.
4. SUBSURFACE DRAINAGE SYSTEMS ARE REQUIRED TO BE DRAINED IN 48 HOURS
5. CONTRACTOR TO FIELD VERIFY THE EXISTING NATURAL GAS LINE AND TAP THE PROP NATURAL GAS LINE TO THE EXISTING LINE, EXTEND TO THE FACILITY AND CONNECT TO THE GAS METER
6. PROP NATURAL GAS LINE TO BE INSTALLED 3 FT BELOW GROUND ELEVATION
7. SEE SHEET C4 FOR YARD PIPING DETAIL.

TEMPORARY BENCHMARK DESCRIPTION

TBM-560 CUT "X" IN CONCRETE
INLET TOP - ELEVATION 66.17'
TBM-561 CUT "X" IN CONCRETE
PAD - ELEVATION 68.37'

LEGEND

- EXISTING PAVEMENT
- EXISTING GRASS AREA
- PROPOSED PAVEMENT
- PROPOSED GRASS AREA

SCALE: 1"= 4'

0' 4' 8' 12'

NO.	DATE	REVISION	APP.

NOTICE:
FOR YOUR SAFETY, YOU ARE REQUIRED BY TEXAS LAW TO CALL 811 AT LEAST 48 HOURS BEFORE YOU DIG SO THAT UNDERGROUND LINES CAN BE MARKED. THIS SIGNATURE DOES NOT FULFILL YOUR OBLIGATION TO CALL 811

VERIFICATION OF PRIVATE UTILITY LINES

Date

CenterPoint Energy natural gas utilities shown. (Gas service lines are not shown). This signature not be used for conflict verification.

Signature valid for six months.

Date

CenterPoint Energy/UNDERGROUND Electrical Facilities Verification ONLY. (This signature verifies existing underground facilities - not to be used for conflict verification)

Signature valid for six months.

Date

Approved for AT&T underground conduit facilities only.
Signature valid for one year.

PAPE-DAWSON
2107 CITYWEST BLVD, 3RD FLR I HOUSTON, TX 77042 I 713.428.2400
TEXAS ENGINEERING FIRM #470 I TEXAS SURVEYING FIRM #10028800

PAPE-DAWSON
2107 CITYWEST BOULEVARD
3RD FLR
HOUSTON, TEXAS 77402
713-428-2400
TX FIRM #470

SURVEYED BY:
PAPE-DAWSON
FB NO. 24-018

THIS DOCUMENT IS RELEASED FOR INTERIM REVIEW UNDER THE AUTHORIZATION OF AMIRHOSSEIN SHOKOUHI, P.E. (#139835) AND IS **NOT TO BE USED FOR CONSTRUCTION.**

CITY OF HOUSTON
HOUSTON PUBLIC WORKS

LIFT STATION REHABILITATION AND RECONSTRUCTION
BEN'S BRANCH, WOODLAND RIDGE, ELMWOOD HILLS, FOREST SHORES, TRAIL RIVER, RIVERLAWN

CIVIL

RIVERLAWN LIFT STATION PROPOSED YARD PIPING PLAN

WBS NUMBER	FOR CITY OF HOUSTON USE ONLY
R-000267-0180-3	
DRAWING SCALE	
AS NOTED	
CITY OF HOUSTON PM	
BRENDA JOHNSON P.E.	
SHEET NO. 301 OF 338	

RL-C-04

FILE PATH: K:\Projects\423\77 COH LS Package\00\03 CADD\Plans\Sheets\08 RiverLawn\RL PROPOSED YARD PIPING PLAN.dwg

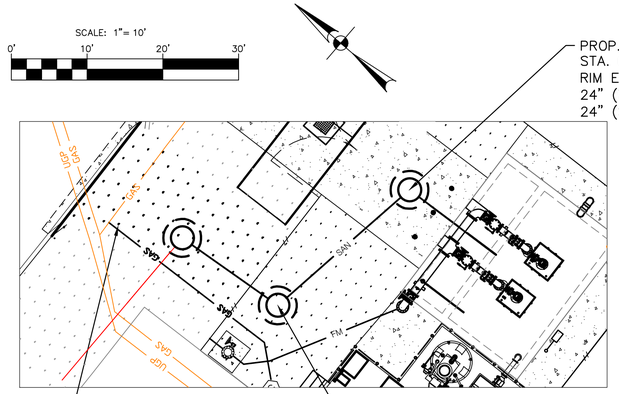

PROP. 4' SAN SWR W/ 3' LID
STA. 0+25.48
RIM EL = 68.03'
24" (W) FL = 52.83'
24" (S) FL = 52.83'

PROP. 4' SAN SWR W/ 3' LID
STA. 0+63.55
RIM EL = 67.60'
24" (W) FL = 52.80'
24" (S) FL = 52.80'

PROP. 4' SAN SWR W/ 3' LID
STA. 0+40.92
RIM EL = 68.14'
24" (N) FL = 52.82'
24" (SE) FL = 52.82'

PLAN

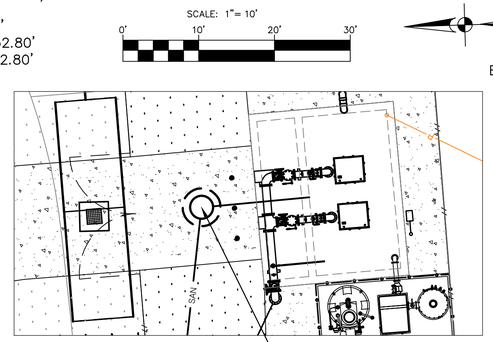

PROP. 4' SAN SWR W/ 3' LID
STA. 0+05.59
RIM EL = 67.44'
24" (W) FL = 52.80'
24" (S) FL = 52.80'

PLAN

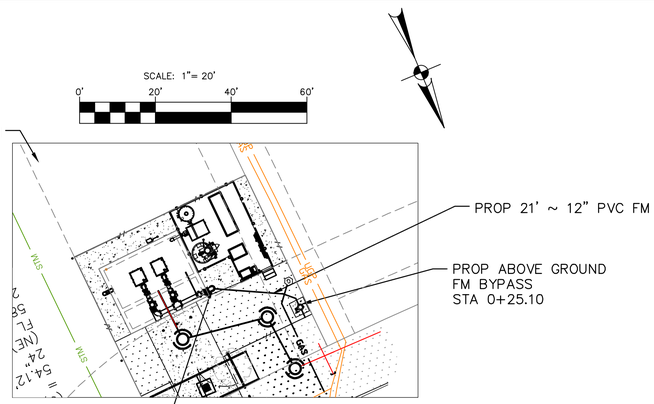

EXISTING 12" FM

PROP 21' ~ 12" PVC FM

PROP ABOVE GROUND
FM BYPASS
STA 0+25.10

12" PVC FM 90° BEND
STA 0+02.99

PLAN

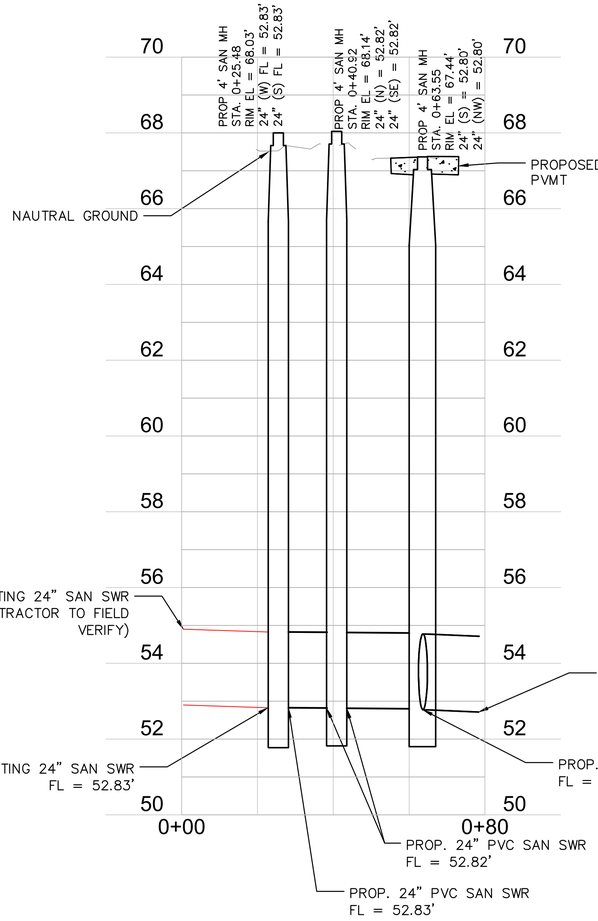

RIVERLAWN PROPOSED SANITARY SEWER PROFILE
1"=2'

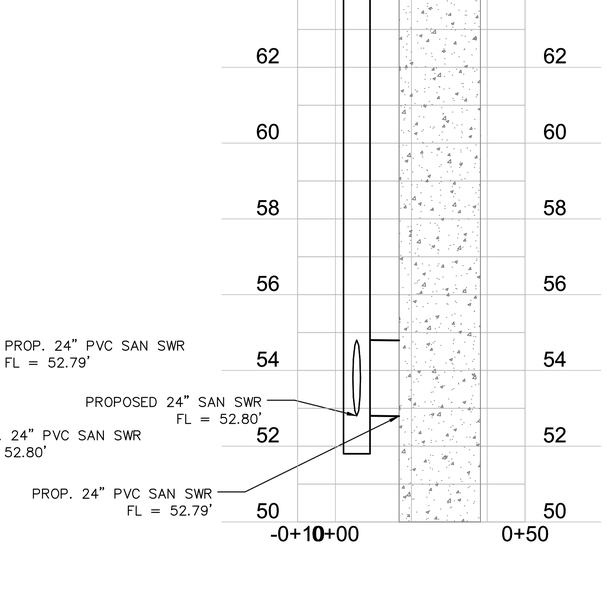

RIVERLAWN PROPOSED INFLUENT SEWER PROFILE
1"=2'

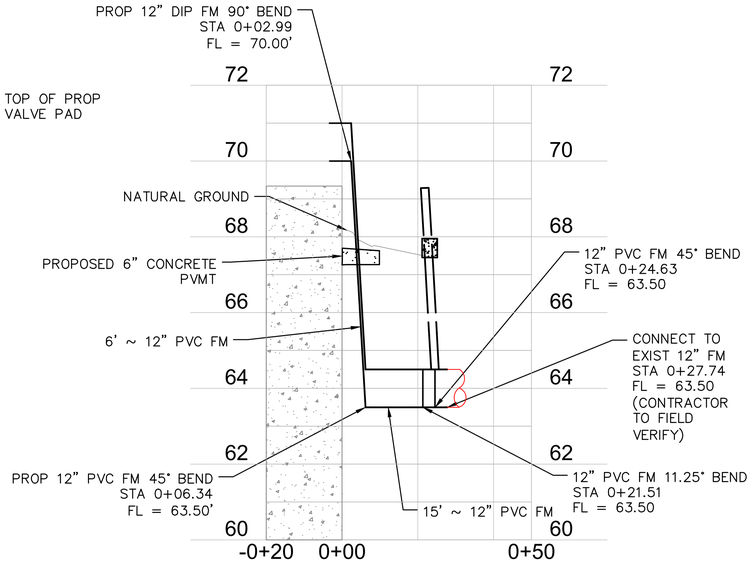

RIVERLAWN PROPOSED FORCE MAIN PROFILE
1"=2'

NOTICE:
FOR YOUR SAFETY, YOU ARE REQUIRED BY TEXAS LAW TO CALL 811 AT LEAST 48 HOURS BEFORE YOU DIG SO THAT UNDERGROUND LINES CAN BE MARKED. THIS SIGNATURE DOES NOT FULFILL YOUR OBLIGATION TO CALL 811

VERIFICATION OF PRIVATE UTILITY LINES

Date

CenterPoint Energy natural gas utilities shown. (Gas service lines are not shown). This signature not be used for conflict verification.

Signature valid for six months.

Date

CenterPoint Energy/UNDERGROUND Electrical Facilities Verification ONLY. (This signature verifies existing underground facilities – not to be used for conflict verification)

Signature valid for six months.

Date

Approved for AT&T underground conduit facilities only.
Signature valid for one year.

PAPE–DAWSON
2107 CITYWEST BLVD, 3RD FLR I HOUSTON, TX 77042 I 713.428.2400
TEXAS ENGINEERING FIRM #470 I TEXAS SURVEYING FIRM #10028800

PAPE–DAWSON
2107 CITYWEST BOULEVARD
3RD FLR
HOUSTON, TEXAS 77402
713–428–2400
TX FIRM #470

THIS DOCUMENT IS RELEASED FOR INTERIM REVIEW UNDER THE AUTHORIZATION OF AMIRHOSSEIN SHOKOUHI, P.E. (#139835) AND IS **NOT TO BE USED FOR CONSTRUCTION.**

SURVEYED BY:
PAPE–DAWSON
FB NO. 24–018

CITY OF HOUSTON
HOUSTON PUBLIC WORKS

LIFT STATION REHABILITATION AND RECONSTRUCTION
BEN'S BRANCH, WOODLAND RIDGE, ELMWOOD HILLS, FOREST SHORES, TRAIL RIVER, RIVERLAWN

CIVIL

RIVERLAWN LIFT STATION
PROPOSED YARD PIPING
PROFILE

WBS NUMBER	FOR CITY OF HOUSTON USE ONLY
R–000267–0180–3	
DRAWING SCALE	
AS NOTED	
CITY OF HOUSTON PM	
BRENDA JOHNSON P.E.	
SHEET NO. *299* OF 338	

RL–C–05

NO.	DATE	REVISION	APP.

FILE PATH: K:\Projects\423\77 COH LS Package\00\03 CADD\Plans\Sheets\08 RiverLawn\RL SAN PLAN AND PROF.dwg

PD will finalize the Paving and Grading sheet, including the elevations in 90% deliverable.

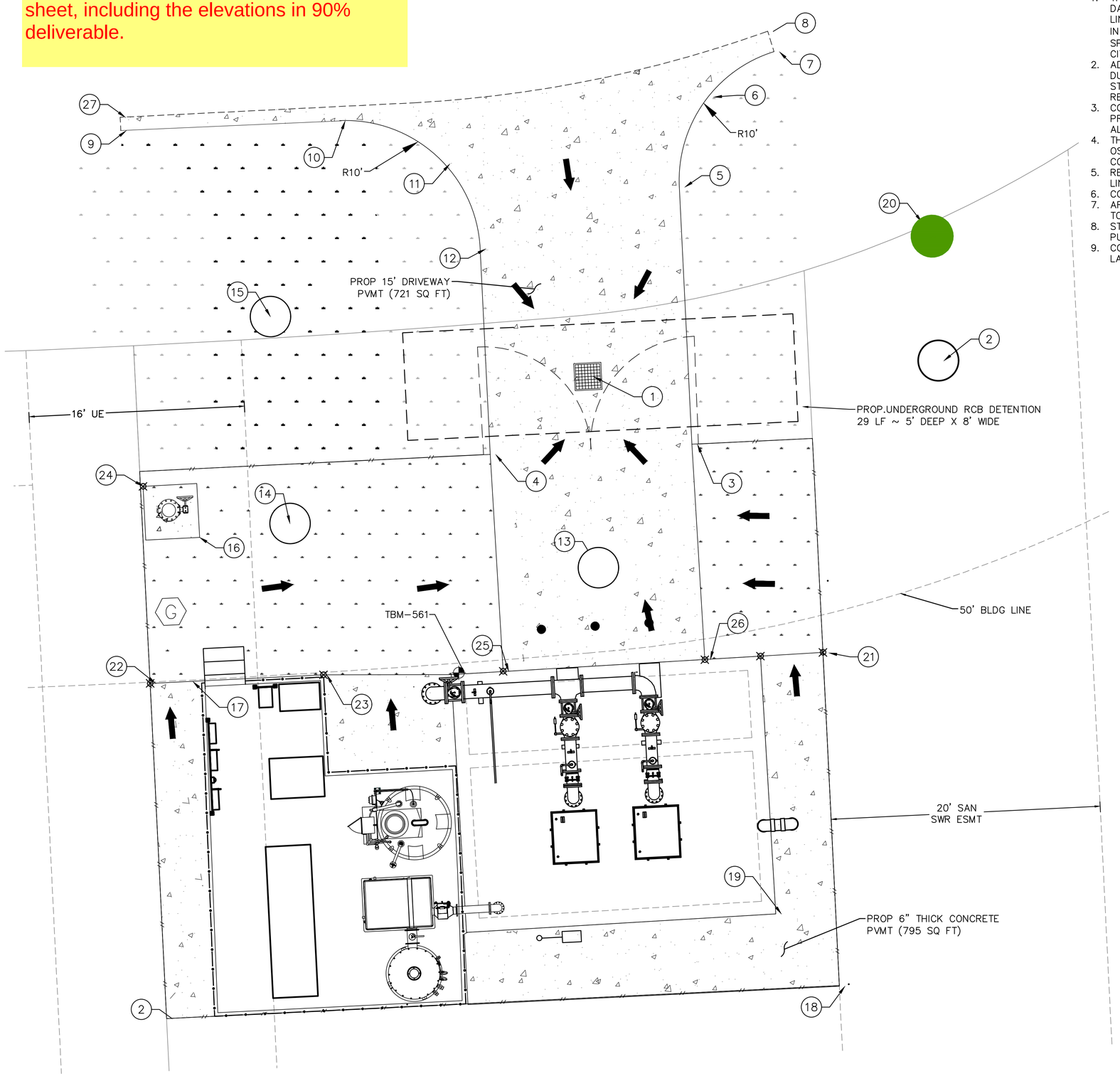

NOTES:

1. THE CONTRACTOR SHALL BE FULLY RESPONSIBLE FOR ANY DAMAGES TO EXISTING WATER, WASTEWATER, STORM WATER LINES AND TRAFFIC CONTROL DEVICES. ALL DAMAGES SHALL BE IN ACCORDANCE WITH THE "STANDARD CONSTRUCTION SPECIFICATIONS" REFERENCED ABOVE, AT NO COST TO THE CITY OF HOUSTON.
2. ADEQUATE DRAINAGE SHALL BE MAINTAINED AT ALL TIMES DURING CONSTRUCTION AND ANY DRAINAGE DITCH OR STRUCTURE DISTURBED DURING CONSTRUCTION SHALL BE RESTORED TO THE SATISFACTION OF THE OWNING AUTHORITY.
3. CONTRACTOR SHALL TAKE NECESSARY PRECAUTIONS TO PROTECT ROOT SYSTEMS OF SHRUBS, PLANTS, AND TREES ALONG THE AREA OF EXCAVATION.
4. THE CONTRACTOR SHALL COMPLY WITH THE LATEST EDITION OF OSHA REGULATIONS AND THE STATE OF TEXAS LAWS CONCERNING EXCAVATION.
5. REFER TO TOPOGRAPHIC SURVEY DRAWING FOR PROPERTY LINES BEARING AND DISTANCE.
6. CONTRACTOR TO COORDINATE OF LAYDOWN AREA WITH OWNER.
7. AREA UNDER ELECTRICAL PLATFORM TO BE PAVED AND GRADED TO DRAIN TOWARDS ON-SITE INLET.
8. STORMWATER RETENTION BOX TO BE MAINTAINED BY HOUSTON PUBLIC WORKS WASTERWATER OPERATIONS..
9. CONTRACTOR TO REHABILITATE ALL DISTURBED SITE & LANDSCAPING TO PRE-CONSTRUCTION OR BETTER CONDITIONS.

TEMPORARY BENCHMARK DESCRIPTION

TBM-560 CUT "X" IN CONCRETE INLET TOP - ELEVATION 66.17'
TBM-561 CUT "X" IN CONCRETE PAD - ELEVATION 68.37'

LEGEND

- DRAINAGE DIRECTION
- EXISTING PAVEMENT
- EXISTING GRASS AREA
- PROPOSED PAVEMENT

SCALE: 1"= 4'

0' 4' 8' 12'

NO.	DATE	REVISION	APP.

PAVEMENT COORDINATION

POINT #	ELEVATION	NORTHING	EASTING
1	67.05	13950844.95	3169624.76
2	67.72	13950846.13	3169650.77
3	67.12	13950839.92	3169632.48
4	67.27	13950839.17	3169617.50
5	67.36	13950859.02	3169631.54
6	67.43	13950865.73	3169633.70
7	67.20	13950869.06	3169638.57
8	67.18	13950870.52	3169638.12
9	66.49	13950863.21	3169590.05
10	66.86	13950863.93	3169606.32
11	67.26	13950860.75	3169614.09
12	67.30	13950854.43	3169616.75
13	67.62	13950830.76	3169625.53
14	67.88	13950834.03	3169602.63
15	67.78	13950849.40	3169601.19
16	67.44	13950833.01	3169595.93
17	67.26	13950822.33	3169595.44
18	67.19	13950799.75	3169643.42
19	68.00	13950805.06	3169638.70
20	67.69	13950855.32	3169650.36
21	67.70	13950824.47	3169642.20
22	67.26	13950822.18	3169592.25
23	67.51	13950822.81	3169605.12
24	67.46	13950836.80	3169591.72
25	67.87	13950823.07	3169618.46
26	68.27	13950823.93	3169633.43
27	66.56	13950864.19	3169590.01

PROP PAVEMENT

ITEM	LOCATION	ACTION	SQUARE FOOTAGE
SITE PAVEMENT	INSIDE PROPERTY BOUNDARY	ADDING CONCRETE UNDER/AROUND PLATFORM	±795.78
ACCESS DRIVEWAY/ DRIVEWAY APRON	OUTSIDE PROPERTY BOUNDARY	ADDING CONCRETE PAVEMENT FOR DRIVEWAY	±330.48
ACCESS DRIVEWAY	INSIDE PROPERTY BOUNDARY	ADDING CONCRETE PAVEMENT FOR DRIVEWAY	±391.80
CONCRETE SLAB	INSIDE PROPERTY BOUNDARY	ADDING CONCRETE SLAB FOR FORCE BYPASS	±16

NOTICE:
FOR YOUR SAFETY, YOU ARE REQUIRED BY TEXAS LAW TO CALL 811 AT LEAST 48 HOURS BEFORE YOU DIG SO THAT UNDERGROUND LINES CAN BE MARKED. THIS SIGNATURE DOES NOT FULFILL YOUR OBLIGATION TO CALL 811

VERIFICATION OF PRIVATE UTILITY LINES

Date

CenterPoint Energy natural gas utilities shown. (Gas service lines are not shown). This signature not be used for conflict verification.

Signature valid for six months.

Date

CenterPoint Energy/UNDERGROUND Electrical Facilities Verification ONLY. (This signature verifies existing underground facilities – not to be used for conflict verification)

Signature valid for six months.

Date

Approved for AT&T underground conduit facilities only.
Signature valid for one year.

PAPE-DAWSON
2107 CITYWEST BLVD, 3RD FLR I HOUSTON, TX 77042 I 713.428.2400
TEXAS ENGINEERING FIRM #470 I TEXAS SURVEYING FIRM #10028800

PAPE-DAWSON
2107 CITYWEST BOULEVARD
3RD FLR
HOUSTON, TEXAS 77402
713-428-2400
TX FIRM #470

SURVEYED BY:
PAPE-DAWSON
FB NO. 24-018

THIS DOCUMENT IS RELEASED FOR INTERIM REVIEW UNDER THE AUTHORIZATION OF AMIRHOSSEIN SHOKOUHI, P.E. (#139835) AND IS **NOT TO BE USED FOR CONSTRUCTION.**

CITY OF HOUSTON
HOUSTON PUBLIC WORKS

LIFT STATION REHABILITATION AND RECONSTRUCTION
BEN'S BRANCH, WOODLAND RIDGE, ELMWOOD HILLS, FOREST SHORES, TRAIL RIVER, RIVERLAWN

CIVIL

RIVERLAWN LIFT STATION PAVING AND GRADING PLAN

WBS NUMBER	FOR CITY OF HOUSTON USE ONLY
R-000267-0180-3	
DRAWING SCALE	
AS NOTED	
CITY OF HOUSTON PM	
BRENDA JOHNSON P.E.	
SHEET NO. 301 OF 338	

RL-C-06

FILE PATH: K:\Projects\423\77 COH LS Package\00\03 CADD\Plans\Sheets\08 RiverLawn\RL PAVING AND GRADING.dwg

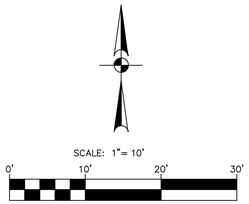

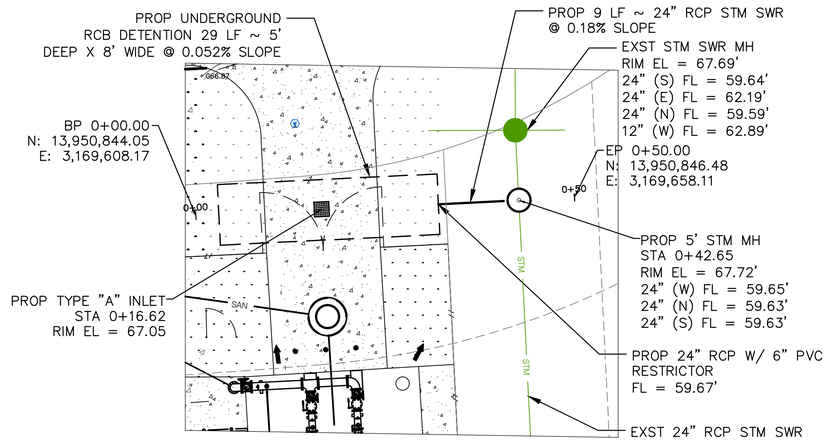

PLAN

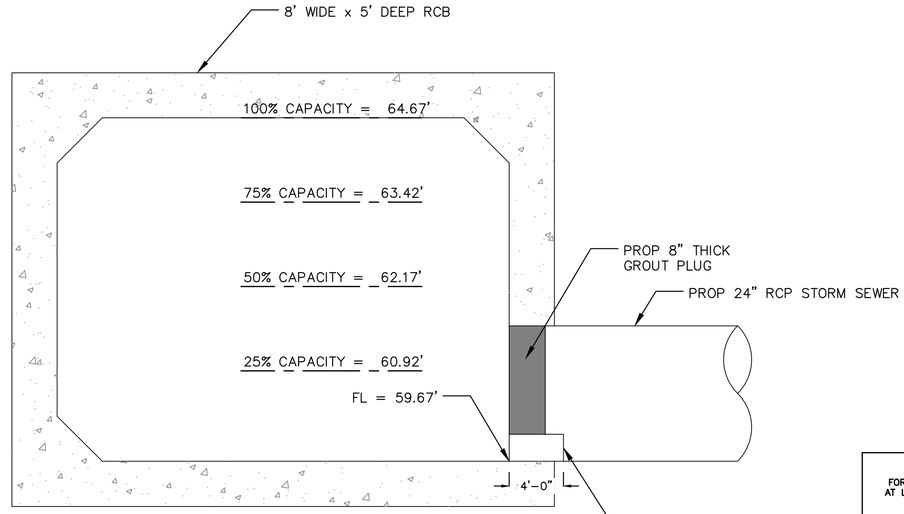

RCB/RESTRICTOR SECTION DETAIL
N.T.S.

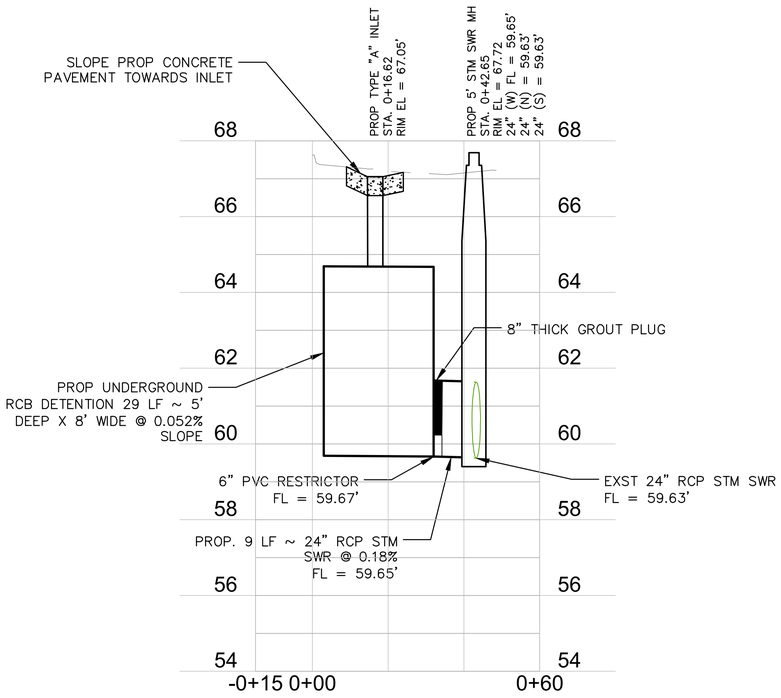

RIVERLAWN PROP STORM SEWER PROFILE

RIVERLAWN LIFT STATION DETENTION & RESTRICTOR CALCULATIONS

DETENTION:

Disturbed Area	0.0402	ac
Detention Rate (R_d)	0.80	ac-ft/ac
Proposed (final) Impervious Area (A_p) =	0.0402	ac
Existing Impervious Area To Be Removed (A_e) =	0.0165	ac
Required Detention Volume = (Ap * Rd) - (Ae * 0.40 ac-ft/ac)		
Total Required Detention Volume =	0.0256	ac-ft
Provided Detention Volume = 8' x 5' x 29' (W x D x L) =	0.0266	ac-ft

RESTRICTORS:

Low Level Restrictor (25% Flow)

Total Drainage Area =	0.0581	ac
Outflow Rate Allowed for Low Flow QL1 =	0.0291	cfs
Head HL1 (water surface differential) for Low Flow =	1	ft
Calculated Low Level Restrictor Size DL =	0.91	in
Provided/Designed Low Level Restrictor Size DL1 =	6	in

High Level Restrictor (75% Flow)

Total Drainage Area =	0.0581	ac
Total Outflow Rate (100%) Q =	0.1162	cfs
Re-calculated Head HL2 (water surface differential) for Low Level Restrictor =	3.5	ft
Re-calculated Low Flow Q L2 for Low Level Restrictor =	2.358	cfs
Outflow Rate Allowed for High Flow Qh1 (75%) =	-2.2421	cfs
Head Hh2 (water surface differential) for High Level Restrictor =	1	ft
Calculated High Level Restrictor Size Dh =	#NUM!	in
Provided/Designed High Level Restrictor Size Dh1 (75%) =	N/A	in

No need for High Level Restrictor

NO. | DATE | REVISION | APP.

NOTICE:
FOR YOUR SAFETY, YOU ARE REQUIRED BY TEXAS LAW TO CALL 811 AT LEAST 48 HOURS BEFORE YOU DIG SO THAT UNDERGROUND LINES CAN BE MARKED. THIS SIGNATURE DOES NOT FULFILL YOUR OBLIGATION TO CALL 811

VERIFICATION OF PRIVATE UTILITY LINES

Date

CenterPoint Energy natural gas utilities shown. (Gas service lines are not shown). This signature not be used for conflict verification.

Signature valid for six months.

Date

CenterPoint Energy/UNDERGROUND Electrical Facilities Verification ONLY. (This signature verifies existing underground facilities – not to be used for conflict verification)

Signature valid for six months.

Date

Approved for AT&T underground conduit facilities only.
Signature valid for one year.

PAPE–DAWSON
2107 CITYWEST BLVD, 3RD FLR I HOUSTON, TX 77042 I 713.428.2400
TEXAS ENGINEERING FIRM #470 I TEXAS SURVEYING FIRM #10028800

PAPE–DAWSON
2107 CITYWEST BOULEVARD
3RD FLR
HOUSTON, TEXAS 77402
713–428–2400
TX FIRM #470

SURVEYED BY:
PAPE–DAWSON
FB NO. 24–018

THIS DOCUMENT IS RELEASED FOR INTERIM REVIEW UNDER THE AUTHORIZATION OF AMIRHOSSEIN SHOKOUHI, P.E. (#139835) AND IS **NOT TO BE USED FOR CONSTRUCTION.**

CITY OF HOUSTON
HOUSTON PUBLIC WORKS

LIFT STATION REHABILITATION AND RECONSTRUCTION
BEN'S BRANCH, WOODLAND RIDGE, ELMWOOD HILLS, FOREST SHORES, TRAIL RIVER, RIVERLAWN

CIVIL

RIVERLAWN LIFT STATION STORM SEWER PLAN AND PROFILE

WBS NUMBER	FOR CITY OF HOUSTON USE ONLY
R–000267–0180–3	
DRAWING SCALE	
AS NOTED	
CITY OF HOUSTON PM	
BRENDA JOHNSON P.E.	
SHEET NO. 301 OF 338	

RL–C–07

FILE PATH: K:\Projects\423\77 COH LS Package\00\03 CADD\Plans\Sheets\08 RiverLawn\RL STORM SEWER PLAN AND PROF.dwg

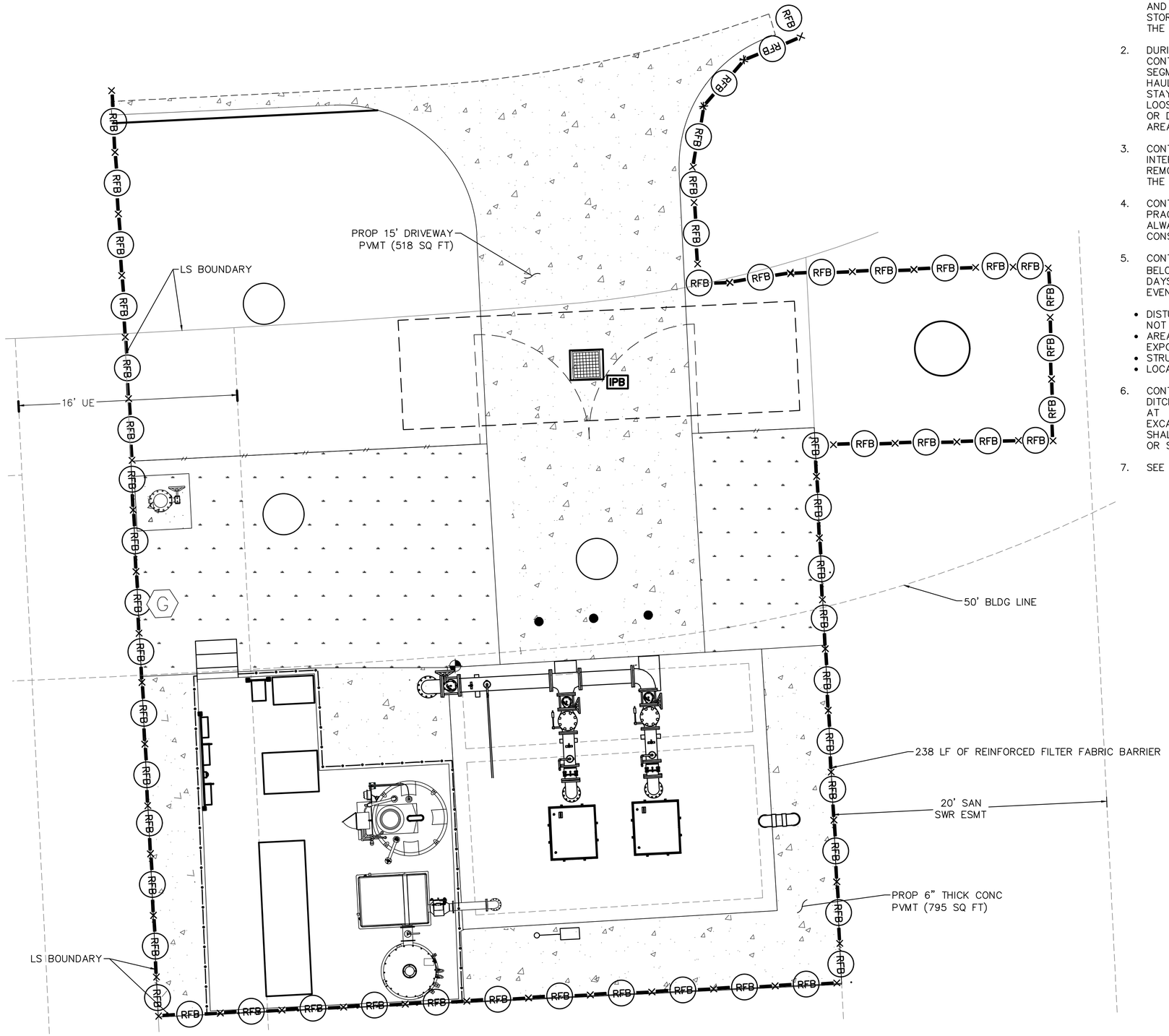

COH SWPPP NOTES:

1. CONTRACTOR SHALL IMPLEMENT INLET PROTECTION DEVICES AND REINFORCED FILTER FABRIC BARRIER ALONG ROAD AND SIDE DITCHES AT LOCATIONS SHOWN ON THE TYPICAL STORM WATER POLLUTION PREVENTION (SWPP) PLANS TO KEEP SILT AND OR EXCAVATED MATERIALS FROM ENTERING INTO THE STORM WATER INLETS AND DITCHES EVENTUALLY POLLUTING THE RECEIVING STORM.

2. DURING THE EXCAVATION PHASE OF THE PROJECT, CONTRACTOR SHALL SCHEDULE THE WORK IN SHORT SEGMENTS SO THAT EXCAVATION MATERIAL CAN BE QUICKLY HAULED AWAY FROM THE SITE AND TO PREVENT IT FROM STAYING UNCOLLECTED ON THE EXISTING PAVEMENT. ANY LOOSE EXCAVATED MATERIAL WHICH FALLS ON PAVEMENTS OR DRIVEWAYS SHALL BE SWEPT BACK INTO THE EXCAVATED AREA.

3. CONTRACTOR SHALL CLEAN UP THE EXISTING STREET INTERSECTIONS AND DRIVEWAYS DAILY, AS NECESSARY, TO REMOVE ANY EXCESS MUD, SILT OR ROCK TRACKED FORM THE EXCAVATED AREA.

4. CONTRACTOR SHALL FOLLOW GOOD HOUSEKEEPING PRACTICES DURING THE CONSTRUCTION OF THE PROJECT, ALWAYS CLEANING UP DIRT AND LOOSE MATERIAL AS CONSTRUCTION PROGRESSES.

5. CONTRACTOR TO INSPECT AND MAINTAIN THE AREAS LISTED BELOW AT LEAST ONCE EVERY FOURTEEN (14) CALENDAR DAYS AND WITHIN 24 HOURS OF THE END OF A STORM EVENT OF 0.5 INCHES OR GREATER.

   - DISTURBED AREAS OF THE CONSTRUCTION SITE THAT HAVE NOT BEEN FINALLY STABILIZED.
   - AREAS USED FOR STORAGE OF MATERIALS THAT ARE EXPOSED TO PRECIPITATION.
   - STRUCTURAL CONTROL MEASURES.
   - LOCATIONS WHERE VEHICLES ENTER OR EXIT THE SITE.

6. CONTRACTOR TO BE RESPONSIBLE TO MAINTAIN EXISTING DITCHES AND OR CULVERTS FOR UNOBSTRUCTED DRAINAGE AT ALL TIMES. WHERE SODDING IS DISTURBED BY EXCAVATION ON BACKFILLING OPERATIONS, SUCH AREAS SHALL BE REPLACED BY SEEDING OR SODDING. SLOPES 4:1 OR STEEPER SHALL BE REPLACED BY BLOCK SODDING.

7. SEE SHEET 007 FOR DETAILS.

TEMPORARY BENCHMARK DESCRIPTION

TBM-560 CUT "X" IN CONCRETE
INLET TOP - ELEVATION 66.17'
TBM-561 CUT "X" IN CONCRETE
PAD - ELEVATION 68.37'

LEGEND

- RFB — REINFORCED FILTER FABRIC BARRIER
- PROPOSED GRASS AREA
- PROPOSED PAVEMENT
- IPB — INLET PROTECTION BARRIER

SCALE: 1"= 4'

0' 4' 8' 12'

NO.	DATE	REVISION	APP.

NOTICE:

FOR YOUR SAFETY, YOU ARE REQUIRED BY TEXAS LAW TO CALL 811 AT LEAST 48 HOURS BEFORE YOU DIG SO THAT UNDERGROUND LINES CAN BE MARKED. THIS SIGNATURE DOES NOT FULFILL YOUR OBLIGATION TO CALL 811

VERIFICATION OF PRIVATE UTILITY LINES

Date

CenterPoint Energy natural gas utilities shown. (Gas service lines are not shown). This signature not be used for conflict verification.

Signature valid for six months.

Date

CenterPoint Energy/UNDERGROUND Electrical Facilities Verification ONLY. (This signature verifies existing underground facilities – not to be used for conflict verification)

Signature valid for six months.

Date

Approved for AT&T underground conduit facilities only.
Signature valid for one year.

PAPE-DAWSON

2107 CITYWEST BLVD, 3RD FLR I HOUSTON, TX 77042 I 713.428.2400

TEXAS ENGINEERING FIRM #470 I TEXAS SURVEYING FIRM #10028800

PAPE-DAWSON
2107 CITYWEST BOULEVARD
3RD FLR
HOUSTON, TEXAS 77402
713-428-2400
TX FIRM #470

SURVEYED BY:
PAPE-DAWSON
FB NO. 24-018

THIS DOCUMENT IS RELEASED FOR INTERIM REVIEW UNDER THE AUTHORIZATION OF AMIRHOSSEIN SHOKOUHI, P.E. (#139835) AND IS **NOT TO BE USED FOR CONSTRUCTION.**

CITY OF HOUSTON

HOUSTON PUBLIC WORKS

LIFT STATION REHABILITATION AND RECONSTRUCTION
BEN'S BRANCH, WOODLAND RIDGE, ELMWOOD HILLS, FOREST SHORES, TRAIL RIVER, RIVERLAWN

CIVIL

RIVERLAWN LIFT STATION SWPPP

WBS NUMBER	FOR CITY OF HOUSTON USE ONLY
R-000267-0180-3	
DRAWING SCALE	
AS NOTED	
CITY OF HOUSTON PM	
BRENDA JOHNSON P.E.	
SHEET NO. 056 OF 338	

RL-C-08

FILE PATH: K:\Projects\423\77 COH LS Package\00\03 CADD\Plans\Sheets\08 RiverLawn\SWPPP.dwg

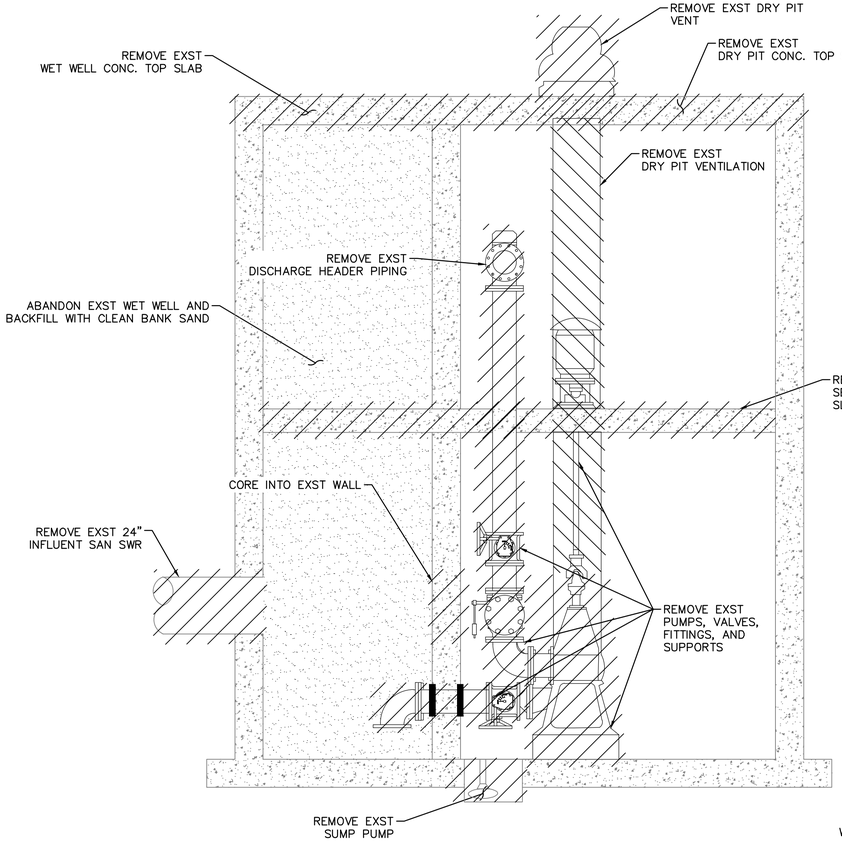

SECTION VIEW

SCALE 3/8"=1'-0"

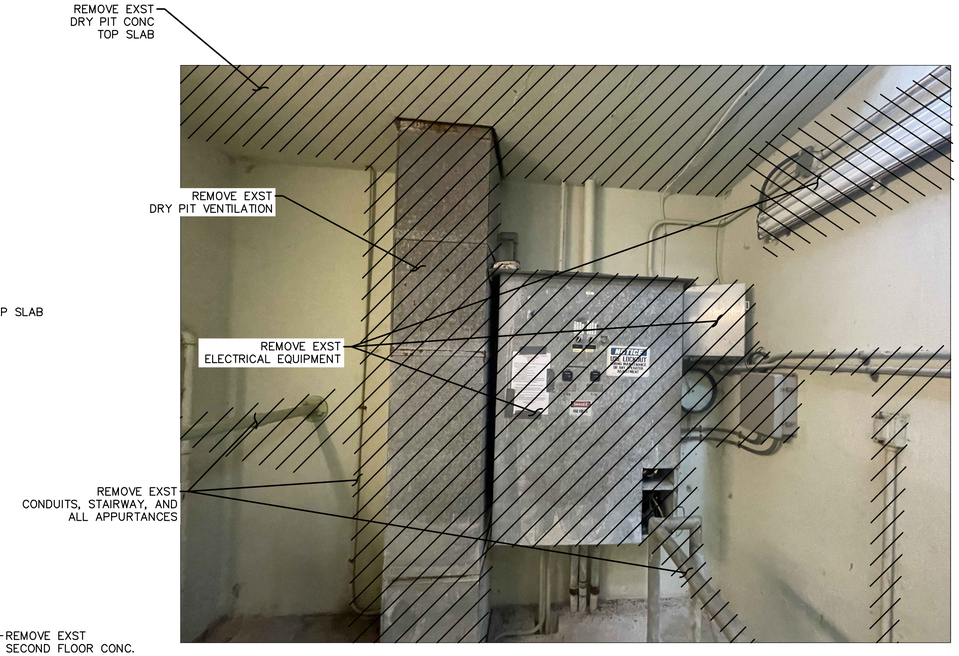

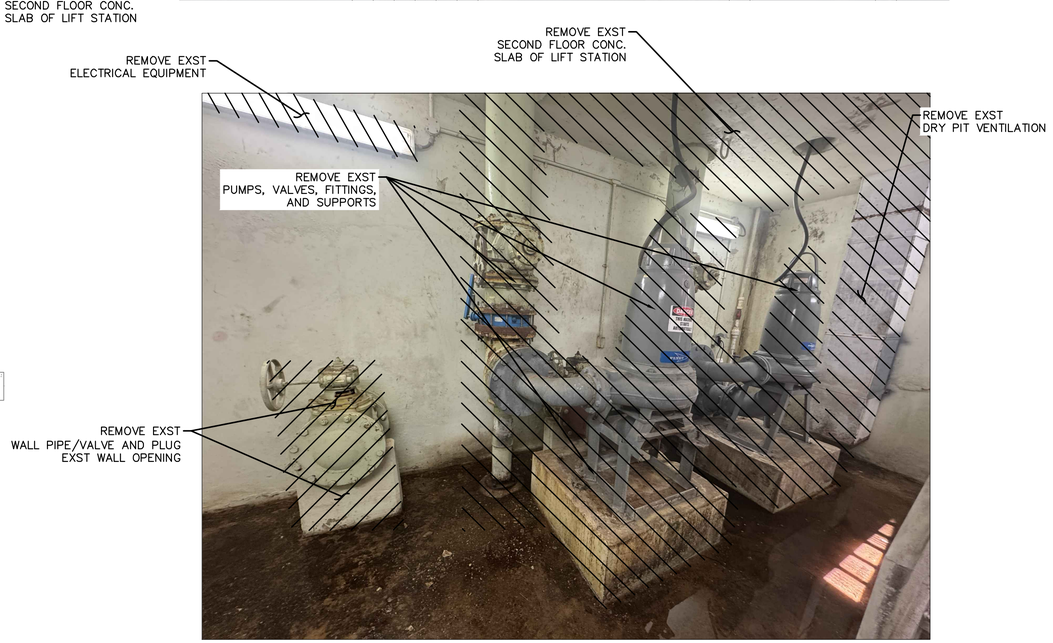

LEGEND

TO BE REMOVED

NO.	DATE	REVISION	APP.

NOTICE:

FOR YOUR SAFETY, YOU ARE REQUIRED BY TEXAS LAW TO CALL 811 AT LEAST 48 HOURS BEFORE YOU DIG SO THAT UNDERGROUND LINES CAN BE MARKED. THIS SIGNATURE DOES NOT FULFILL YOUR OBLIGATION TO CALL 811

VERIFICATION OF PRIVATE UTILITY LINES

Date

CenterPoint Energy natural gas utilities shown. (Gas service lines are not shown). This signature not be used for conflict verification.

Signature valid for six months.

Date

CenterPoint Energy/UNDERGROUND Electrical Facilities Verification ONLY. (This signature verifies existing underground facilities – not to be used for conflict verification)

Signature valid for six months.

Date

Approved for AT&T underground conduit facilities only.
Signature valid for one year.

PAPE-DAWSON

2107 CITYWEST BLVD, 3RD FLR I HOUSTON, TX 77042 I 713.428.2400

TEXAS ENGINEERING FIRM #470 I TEXAS SURVEYING FIRM #10028800

PAPE-DAWSON
2107 CITYWEST BOULEVARD
3RD FLR
HOUSTON, TEXAS 77402
713-428-2400
TX FIRM #470

SURVEYED BY:
PAPE-DAWSON
FB NO. 24-018

THIS DOCUMENT IS RELEASED FOR INTERIM REVIEW UNDER THE AUTHORIZATION OF AMIRHOSSEIN SHOKOUHI, P.E. (#139835) AND IS **NOT TO BE USED FOR CONSTRUCTION.**

CITY OF HOUSTON

HOUSTON PUBLIC WORKS

LIFT STATION REHABILITATION AND RECONSTRUCTION
BEN'S BRANCH, WOODLAND RIDGE, ELMWOOD HILLS, FOREST SHORES, TRAIL RIVER, RIVERLAWN

MECHANICAL

RIVERLAWN LIFT STATION DEMOLITION- SECTIONS

WBS NUMBER	FOR CITY OF HOUSTON USE ONLY
R-000267-0180-3	
DRAWING SCALE	
AS NOTED	
CITY OF HOUSTON PM	
BRENDA JOHNSON P.E.	
SHEET NO. 309 OF 338	

RL-M-01

FILE PATH: K:\Projects\423\77 COH LS Package\00\03 CADD\Plans\Sheets\08 RiverLawn\RL DEMO SECTIONS.dwg

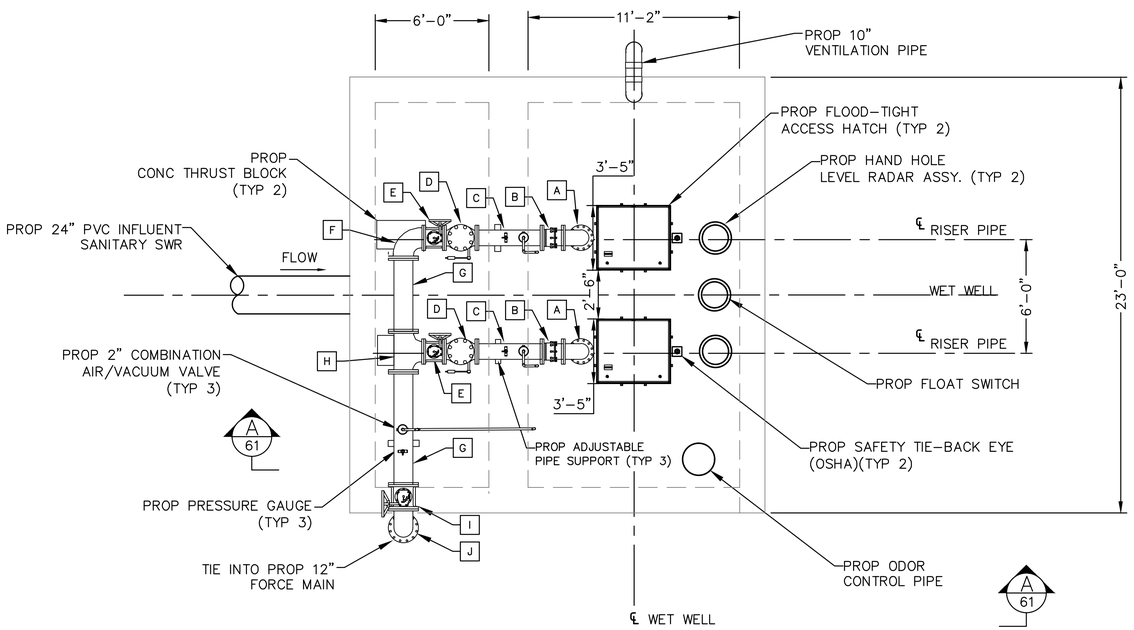

PLAN VIEW @ GRADE

SCALE 1/4"=1'-0"

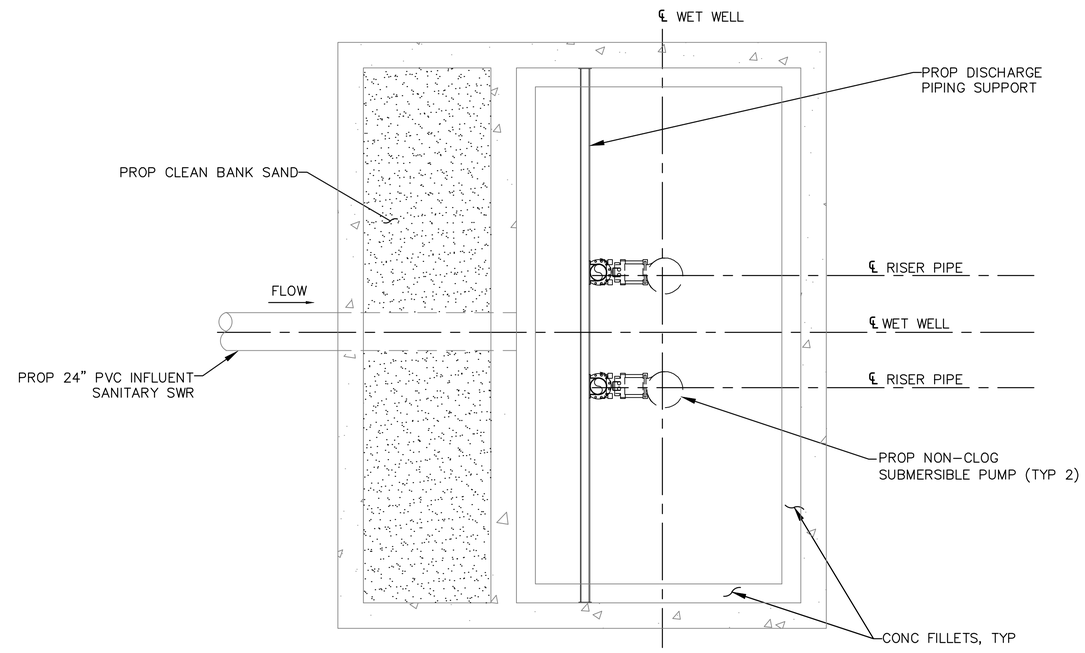

SECTION VIEW

SCALE 1/4"=1'-0"

PIPE AND FITTING SCHEDULE		
MARK	DESCRIPTION	CONNECTION
A	10"x90° BEND	FLG/FLG
B	10" RESTRAINED FLANGED COUPLING ADAPTOR	FCA501 OR APPROVED EQUAL
C	10" SPOOL	FLG/FLG
D	10" CHECK VALVE	FLG
E	10" PLUG VALVE	FLG
F	10"x12"x90° REDUCING BEND	FLG/FLG
G	12" SPOOL	FLG/FLG
H	12"x10" REDUCING TEE	FLG
I	12" PLUG VALVE	FLG
J	12"x90° BEND	FLG

LIFT STATION NOTES:

1. ALL SUPPORT BRACKETS, HARDWARE, ANCHORS, BOLTS, ETC. INSIDE WET WELL SHALL BE TYPE 316 STAINLESS STEEL.
2. ALL INTERIOR SURFACES OF CONCRETE WET WELL SHALL BE COATED WITH AN 80 MIL (MIN.) COAT OF RAVEN 405 ULTRA HIGH BUILD EPOXY COATING, SPRAY WALL EPOXY COATING, OR APPROVED EQUAL.
3. ALL PUMP DISCHARGE PIPING IN WET WELL AND VALVE PAD TO BE FLANGED (INSIDE WET WELL/PAD) OR TR FLEX RESTRAINED MECHANICAL JOINT (WHEN BURIED) DUCTILE IRON PIPING. ALL DUCTILE IRON PIPING SHALL BE EPOXY LINED WITH TNEMEC SERIES 431 PERMA-SHIELD PL CERAMIC EPOXY OR APPROVED EQUAL.
4. ALL EXPOSED DUCTILE IRON PIPING, FITTINGS, AND VALVES SHALL BE SANDBLASTED AND COATED WITH TWO (2) COATS OF TNEMEC SERIES 27WB TYPOXY APPLIED AT 6.0 TO 8.0 DRY MILS AND TOPCOATED WITH TNEMEC SERIES 740 UVX APPLIED AT 3.0 TO 5.0 DRY MILS. FINAL COLOR TO BE APPROVED BY THE DISTRICT. SHOP PRIMING WITH TNEMEC SERIES N140 IS ACCEPTABLE. BITUMASTIC COATING SHALL NOT BE APPLIED TO EXPOSED DI PIPING.
5. ALL BURIED DUCTILE IRON PIPING, FITTINGS, AND VALVES SHALL BE WRAPPED WITH A POLYETHYLENE ENCASEMENT IN ACCORDANCE WITH THE LATEST REVISION OF AWWA C105.
6. ALL MECHANICAL JOINT FITTINGS TO BE RESTRAINED USING SERIES 1100 OR 2000PV MEGALUG JOINT RESTRAINTS.
7. PUMP SPACING DIMENSIONS SHOWN ARE APPROXIMATE. ACTUAL DIMENSIONS SHALL BE DETERMINED BY SPECIFIC PUMP MANUFACTURER.
8. PRIMARY LEVEL CONTROL WILL BE PROVIDED BY A SUBMERSIBLE LEVEL TRANSDUCER WITH OPERATION POINTS AS DETERMINED BY ENGINEER. MULTITRODE PROBES ARE FOR BACKUP OPERATION ONLY. REFER TO ELECTRICAL SPECIFICATIONS FOR EQUIPMENT INFORMATION.
9. FLOOD-TIGHT ACCESS HATCH AS SHOWN OR AS REQUIRED BY PUMP MANUFACTURER. DIMENSION MAY VARY PER HATCH MANUFACTURER.

NO.	DATE	REVISION	APP.

NOTICE:
FOR YOUR SAFETY, YOU ARE REQUIRED BY TEXAS LAW TO CALL 811 AT LEAST 48 HOURS BEFORE YOU DIG SO THAT UNDERGROUND LINES CAN BE MARKED. THIS SIGNATURE DOES NOT FULFILL YOUR OBLIGATION TO CALL 811

VERIFICATION OF PRIVATE UTILITY LINES

Date

CenterPoint Energy natural gas utilities shown. (Gas service lines are not shown). This signature not be used for conflict verification.

Signature valid for six months.

Date

CenterPoint Energy/UNDERGROUND Electrical Facilities Verification ONLY. (This signature verifies existing underground facilities – not to be used for conflict verification)

Signature valid for six months.

Date

Approved for AT&T underground conduit facilities only.
Signature valid for one year.

PAPE-DAWSON
2107 CITYWEST BLVD, 3RD FLR I HOUSTON, TX 77042 I 713.428.2400
TEXAS ENGINEERING FIRM #470 I TEXAS SURVEYING FIRM #10028800

PAPE-DAWSON
2107 CITYWEST BOULEVARD
3RD FLR
HOUSTON, TEXAS 77402
713-428-2400
TX FIRM #470

SURVEYED BY:
PAPE-DAWSON
FB NO. 24-018

THIS DOCUMENT IS RELEASED FOR INTERIM REVIEW UNDER THE AUTHORIZATION OF AMIRHOSSEIN SHOKOUHI, P.E. (#139835) AND IS **NOT TO BE USED FOR CONSTRUCTION.**

CITY OF HOUSTON
HOUSTON PUBLIC WORKS

LIFT STATION REHABILITATION AND RECONSTRUCTION
BEN'S BRANCH, WOODLAND RIDGE, ELMWOOD HILLS, FOREST SHORES, TRAIL RIVER, RIVERLAWN

MECHANICAL

RIVERLAWN LIFT STATION PROPOSED PLAN

WBS NUMBER	FOR CITY OF HOUSTON USE ONLY
R-000267-0180-3	
DRAWING SCALE	
AS NOTED	
CITY OF HOUSTON PM	
BRENDA JOHNSON P.E.	
SHEET NO. 310 OF 338	

RL-M-02

FILE PATH: K:\Projects\423\77 COH LS Package\00\03 CADD\Plans\Sheets\08 RiverLawn\RL PROP SECTION AND PLAN.dwg

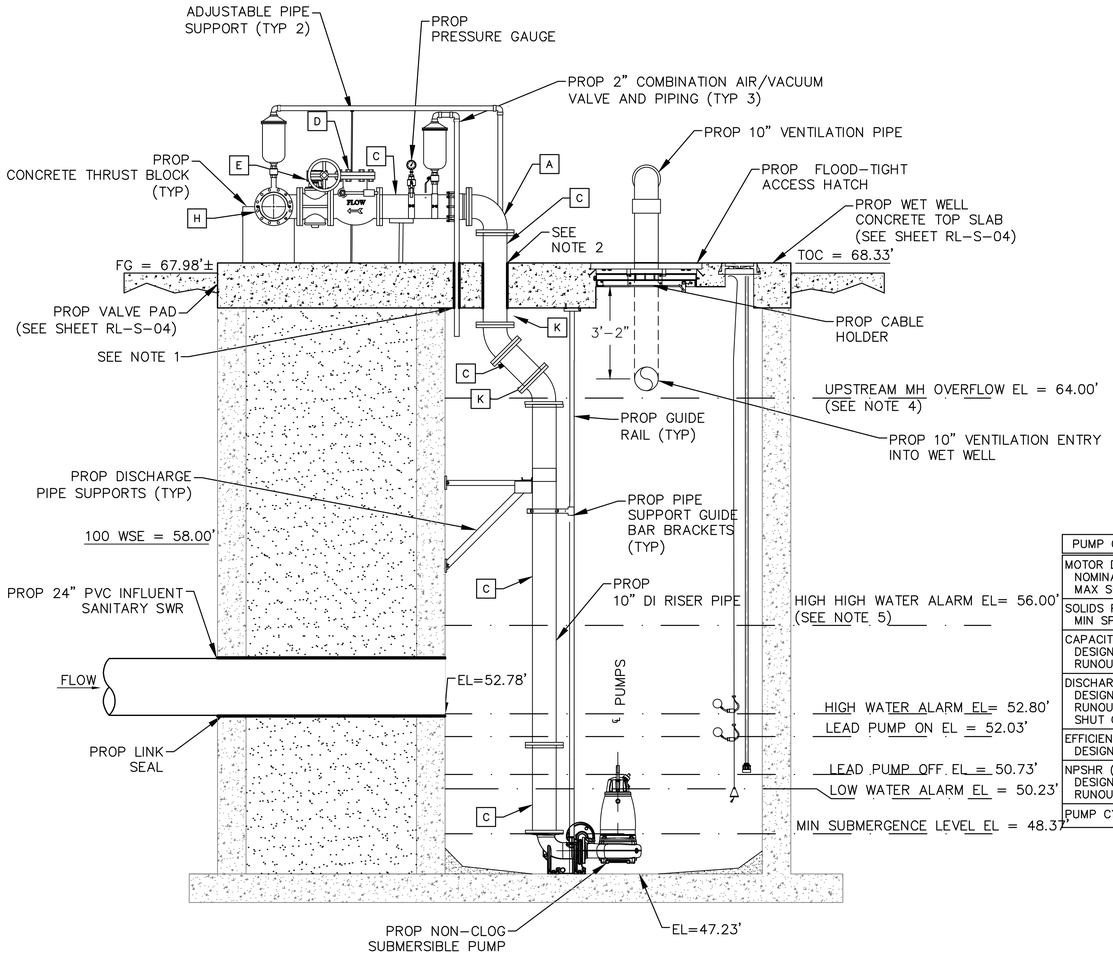

SECTION A

SCALE 3/8"=1'-0"

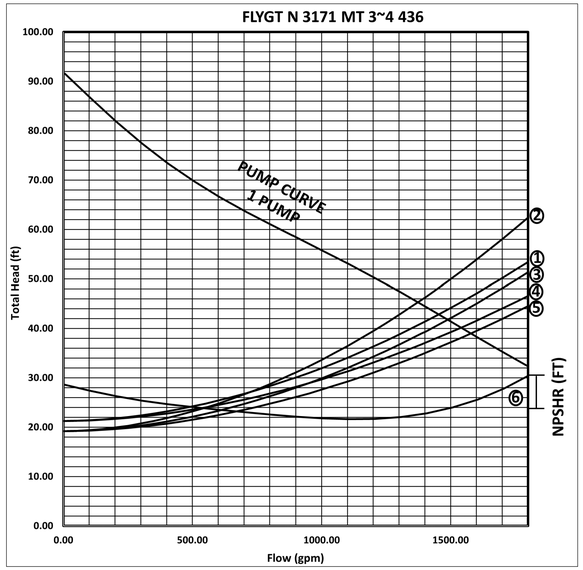

PUMP OPERATION CURVES

PUMP CURVE NOTES:

1. LOW NORMAL OPERATING LEVEL C=120 – DESIGN.
2. HIGH NORMAL OPERATING LEVEL C=100 – INFORMATION ONLY (TCEQ)
3. HIGH NORMAL OPERATING LEVEL C=120 – DESIGN
3. HIGH NORMAL OPERATING LEVEL C=140 – INFORMATION ONLY
4. EMERGENCY FLOODED OPERATING LEVEL C=140 – MAXIMUM DISCHARGE
5. NET POSITIVE SUCTION HEAD AVAILABLE (NPSHA) BASED ON NORMAL OPERATING WATER LEVELS
6. PUMP CURVES ARE MODIFIED FOR STATION LOSSES.

PUMP DATA TABLE

PUMP CHARACTERISTICS	PUMP NO. 1	PUMP NO. 2
MOTOR DATA NOMINAL SIZE (HP) MAX SPEED (RPM)	 25 1755	 25 1755
SOLIDS PASSAGE MIN SPHERE (IN)	 <3	 <3
CAPACITY (GPM) DESIGN RUNOUT	 1453 2207	 1453 2207
DISCHARGE HEAD (FT) DESIGN RUNOUT SHUT OFF	 42.81 21.27 91.60	 42.81 21.27 91.60
EFFICIENCY (%) DESIGN	 78	 78
NPSHR (FT) DESIGN RUNOUT	 23.00 47.83	 23.00 47.83
PUMP CYCLE TIME	6	6

STATION OPERATION TABLES

RISING LEVEL CYCLE			
WATER LEVEL DEPTH	WATER LEVEL ELEVATION	ACTION	PUMP(S) IN OPERATION
3.50	50.73	PUMPS OFF LEVEL – NO ACTION	ALL PUMPS ARE OFF
4.80	52.03	LEAD PUMP TURNS ON	LEAD PUMP OFF
5.56	52.79	HIGH WATER ALARM ON	HIGH WATER ALARM SOUND
8.77	56.00	HIGH HIGH LEVEL ALARM (FLOAT ON LEVEL)	ALL PUMPS ON (FLOATS)

FALLING LEVEL CYCLE			
WATER LEVEL DEPTH	WATER LEVEL ELEVATION	ACTION	PUMP(S) IN OPERATION
8.27	55.50	FLOAT OFF LEVEL	ALL PUMPS OFF (FLOATS)
5.07	52.30	HIGH WATER LEVEL ALARM OFF	LEAD PUMP ON
3.50	50.73	LEAD PUMP TURNS OFF	LEAD PUMP STOPPED – STANDBY PUMP SWITCHES TO LEAD PUMP
3.00	50.23	LOW LEVEL ALARM	–

PIPE AND FITTING SCHEDULE

MARK	DESCRIPTION	CONNECTION
A	10"x90° BEND	FLG/FLG
B	10" RESTRAINED FLANGED COUPLING ADAPTOR	FCA501 OR APPROVED EQUAL
C	10" SPOOL	FLG/FLG
D	10" CHECK VALVE	FLG
E	10" PLUG VALVE	FLG
F	10"x12"x90° REDUCING BEND	FLG/FLG
G	12" SPOOL	FLG/FLG
H	10"x12" REDUCING TEE	FLG
I	12" PLUG VALVE	FLG
J	10"x45° BEND	FLG
K	10"x45° BEND	FLG
L	12"x45° BEND	FLG/FLG

NOTE:

1. SLEEVED OPENING, SEAL W/ LINK-SEAL OR APPROVED EQUAL. AT TOP OF SLAB FILL VOID AROUND SEAL W/ GROUT & RECESS APPROX ¼" BELOW TOP OF SLAB. SLEEVED WET WELL PENETRATION PROP ALL PUMPS OFF LEVEL 1 FT HIGHER THE PUMP MIN SUBMERGE LEVEL
2. SLEEVED WET WELL PENETRATION (SEE SHEET GM-0
3. UPSTREAM MH OVERFLOW ELEVATION PROVIDED BY CITY OF HOUSTON WASTEWATER PLANNING DEPARTMENT.
4. HIGH HIGH WATER LEVEL ALARM ELEVATION TO PROVIDE MINIMUM 2 HOURS RESPONSE TIME PRIOR TO UPSTREAM MANHOLE OVERFLOW ELEVATION.
5. SEE SHEET RL-0-02 FOR LIFT STATION NOTES.

NO.	DATE	REVISION	APP.

NOTICE:
FOR YOUR SAFETY, YOU ARE REQUIRED BY TEXAS LAW TO CALL 811 AT LEAST 48 HOURS BEFORE YOU DIG SO THAT UNDERGROUND LINES CAN BE MARKED. THIS SIGNATURE DOES NOT FULFILL YOUR OBLIGATION TO CALL 811

VERIFICATION OF PRIVATE UTILITY LINES

Date

CenterPoint Energy natural gas utilities shown. (Gas service lines are not shown). This signature not be used for conflict verification.

Signature valid for six months.

Date

CenterPoint Energy/UNDERGROUND Electrical Facilities Verification ONLY. (This signature verifies existing underground facilities – not to be used for conflict verification)

Signature valid for six months.

Date

Approved for AT&T underground conduit facilities only.
Signature valid for one year.

PAPE-DAWSON
2107 CITYWEST BLVD, 3RD FLR I HOUSTON, TX 77042 I 713.428.2400
TEXAS ENGINEERING FIRM #470 I TEXAS SURVEYING FIRM #10028800

PAPE-DAWSON
2107 CITYWEST BOULEVARD
3RD FLR
HOUSTON, TEXAS 77402
713-428-2400
TX FIRM #470

SURVEYED BY:
PAPE-DAWSON
FB NO. 24-018

THIS DOCUMENT IS RELEASED FOR INTERIM REVIEW UNDER THE AUTHORIZATION OF AMIRHOSSEIN SHOKOUHI, P.E. (#139835) AND IS **NOT TO BE USED FOR CONSTRUCTION.**

CITY OF HOUSTON
HOUSTON PUBLIC WORKS

LIFT STATION REHABILITATION AND RECONSTRUCTION
BEN'S BRANCH, WOODLAND RIDGE, ELMWOOD HILLS, FOREST SHORES, TRAIL RIVER, RIVERLAWN

MECHANICAL

RIVERLAWN LIFT STATION PROPOSED SECTIONS

WBS NUMBER	FOR CITY OF HOUSTON USE ONLY
R-000267-0180-3	
DRAWING SCALE	
AS NOTED	
CITY OF HOUSTON PM	
BRENDA JOHNSON P.E.	
SHEET NO. 311 OF 338	

RL-M-03

FILE PATH: K:\Projects\423\77 COH LS Package\00\03 CADD\Plans\Sheets\08 RiverLawn\RL PROP SECTION AND PLAN.dwg

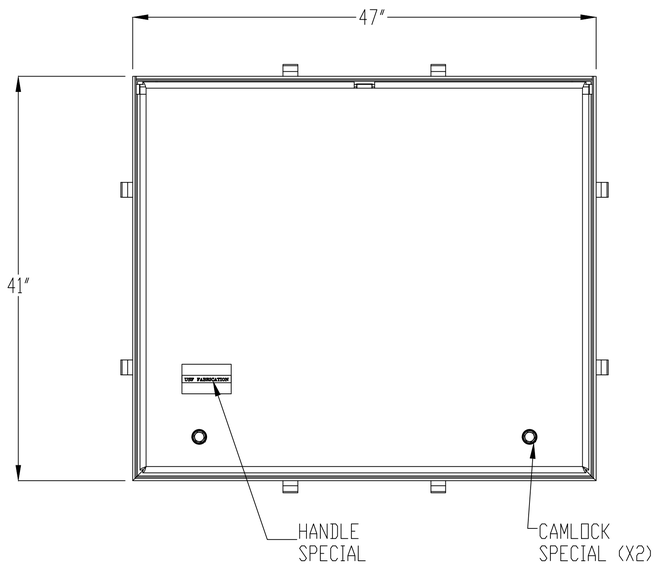

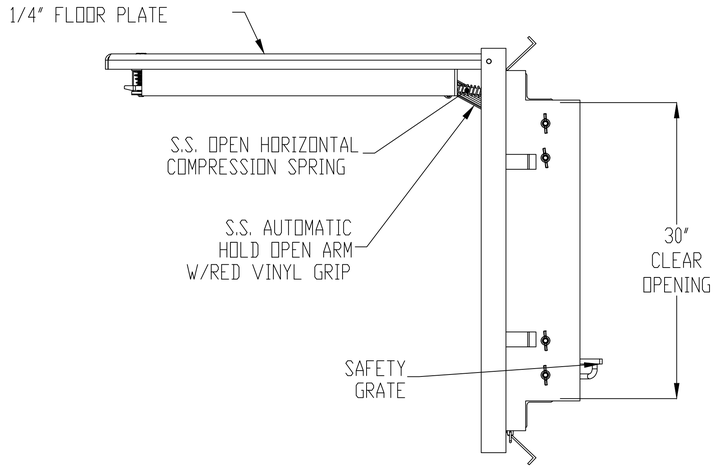

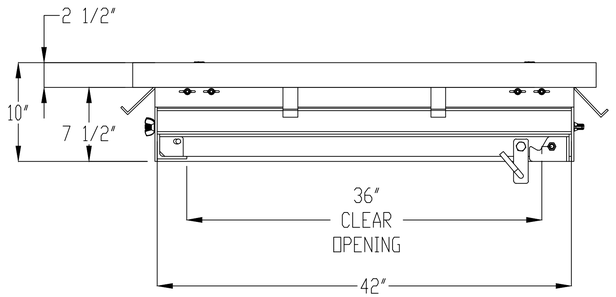

NOTES:
1- MATERIAL: ALUMINUM
MILL FINISH
2- LOADING LOADING: 1560 LBS. PER SQ. FT.
3- 316 STAINLESS STEEL BOLTS & NUTS
4- AREA OF FRAME IN CONTACT WITH CONCRETE
TO BE PAINTED WITH BITUMINOUS COATING
5- THIS DOOR IS DESIGNED TO BE FLOOD TIGHT.
6- GASKET AND FRAME MUST BE FREE OF ANY DIRT,
ROCKS OR OTHER DEBRIS AND CAMLOCKS MUST BE
PROPERLY ENGAGED TO ENSURE MAXIMUM FLOOD RESISTANCE.

INTERPRET DIMENSIONS AND TOLERANCES PER ASME Y14.5M

BREAK ALL SHARP CORNERS & EDGES TO 0.01

TOLERANCES UNLESS OTHERWISE SPECIFIED:
INCHES = +/- 1/16
1/16 = +/- 1/32
1/32 = +/- 1/64

THIS DOCUMENT IS THE PROPERTY OF U.S.F. FABRICATION, INC AND CONTAINS PROPRIETARY INFORMATION. IT SHALL NOT BE MODIFIED, COPIED, FURNISHED NOR DISTRIBUTED ON WHOLE OR IN PART) WITHOUT PROPER AUTHORIZATION OF U.S.F. FABRICATION, INC.

COPYRIGHT © 2025 ALL RIGHTS RESERVED

U.S.F. FABRICATION INC.
HIALEAH, FLORIDA

HATCH Z-APS 30X42
ASSEMBLY (ZERO LEAK)

DRAWN BY:	SCALE: 1:12	SHEET 2 OF 2	DATE: 9/25/25	
APP'D BY: JG	DWG. NO: 1000290582	SHEET SIZE: B	REV: 0	

NO.	DATE	REVISION	APP.

NOTICE:
FOR YOUR SAFETY, YOU ARE REQUIRED BY TEXAS LAW TO CALL 811 AT LEAST 48 HOURS BEFORE YOU DIG SO THAT UNDERGROUND LINES CAN BE MARKED. THIS SIGNATURE DOES NOT FULFILL YOUR OBLIGATION TO CALL 811

VERIFICATION OF PRIVATE UTILITY LINES

Date

CenterPoint Energy natural gas utilities shown. (Gas service lines are not shown). This signature not be used for conflict verification.

Signature valid for six months.

Date

CenterPoint Energy/UNDERGROUND Electrical Facilities Verification ONLY. (This signature verifies existing underground facilities – not to be used for conflict verification)

Signature valid for six months.

Date

Approved for AT&T underground conduit facilities only.
Signature valid for one year.

PAPE–DAWSON
2107 CITYWEST BLVD, 3RD FLR I HOUSTON, TX 77042 I 713.428.2400
TEXAS ENGINEERING FIRM #470 I TEXAS SURVEYING FIRM #10028800

PAPE–DAWSON
2107 CITYWEST BOULEVARD
3RD FLR
HOUSTON, TEXAS 77402
713–428–2400
TX FIRM #470

SURVEYED BY:
PAPE–DAWSON
FB NO. 24–018

THIS DOCUMENT IS RELEASED FOR INTERIM REVIEW UNDER THE AUTHORIZATION OF AMIRHOSSEIN SHOKOUHI, P.E. (#139835) AND IS **NOT TO BE USED FOR CONSTRUCTION.**

CITY OF HOUSTON
HOUSTON PUBLIC WORKS

LIFT STATION REHABILITATION AND RECONSTRUCTION
BEN'S BRANCH, WOODLAND RIDGE, ELMWOOD HILLS, FOREST SHORES, TRAIL RIVER, RIVERLAWN

CIVIL

RIVERLAWN LIFT STATION FLOOD–TIGHT ACCESS HATCH DETAIL

WBS NUMBER	FOR CITY OF HOUSTON USE ONLY
R–000267–0180–3	
DRAWING SCALE	
AS NOTED	
CITY OF HOUSTON PM	
BRENDA JOHNSON P.E.	
SHEET NO. OF 338	

FILE PATH: K:\Projects\423\77 COH LS Package\00\03 CADD\Plans\Sheets\08 RiverLawn\RL ACCESS HATCH DETAIL.dwg

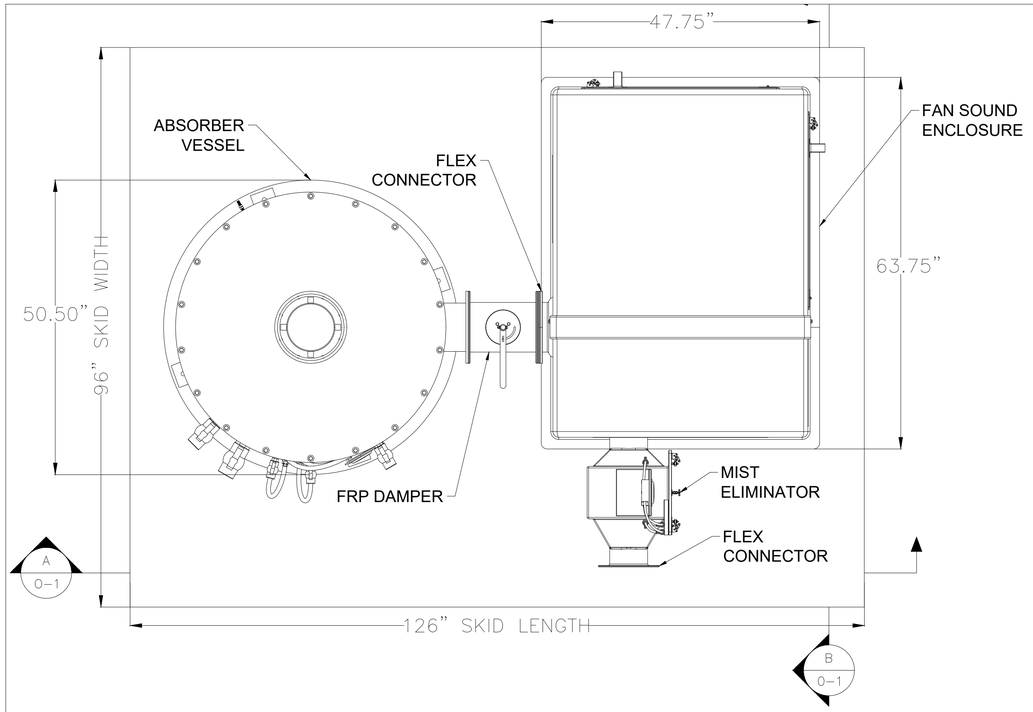

1 / O-1 ACTIVATED CARBON ODOR CONTROL FACILITY – PLAN VIEW

SCALE

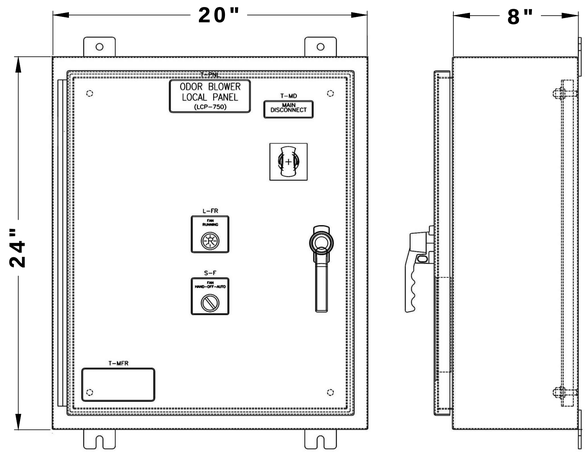

NOTE: PANEL SHALL BE SUPPLIED, LOCATED, AND INSTALLED MINIMUM THREE FEET AWAY FROM BLOWER, OR ODOR CONTROL VESSEL.

2 / O-1 ACTIVATED CARBON CONTROL PANEL

NTS

NOTES:

1. SKID IS 10'-6" LONG BY 7'-6" WIDE. THE SKID AREA CONTAINS THE ACTIVATED CARBON ODOR CONTROL FACILITY.
2. DRAIN PORT TO BE CONNECTED TO DRAIN TO SEWER WITH 6" TRAP AS SHOWN ON SITE PLAN

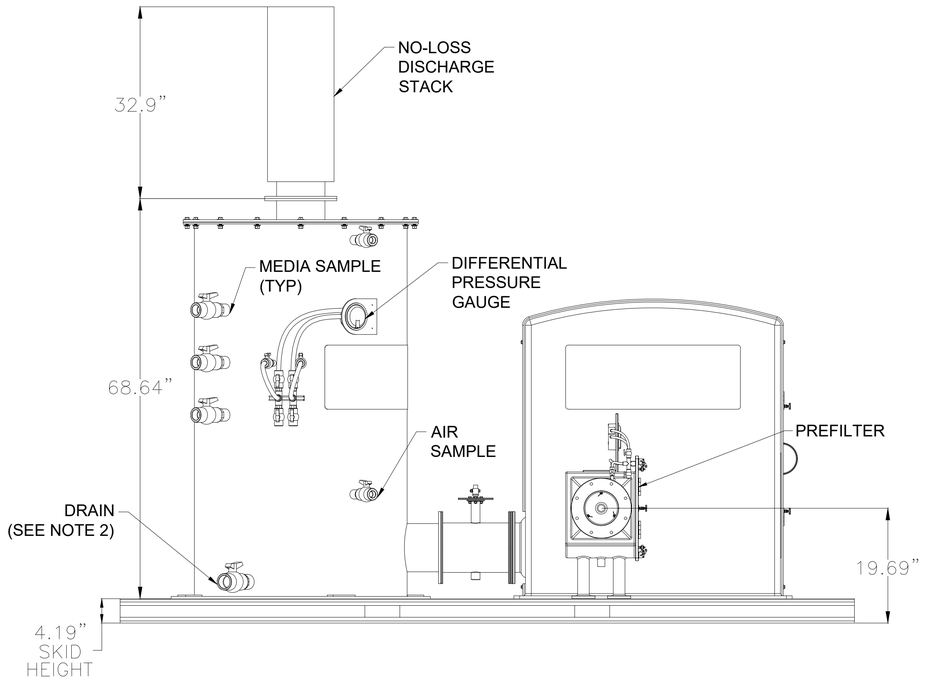

A / O-1 ACTIVATED CARBON ODOR CONTROL FACILITY – SECTION VIEW

SCALE

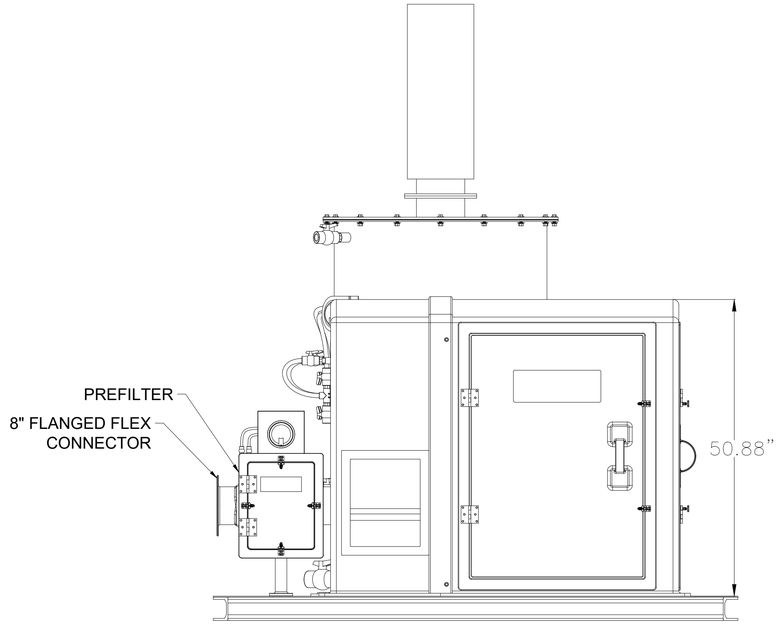

B / O-1 ACTIVATED CARBON ODOR CONTROL FACILITY – SECTION VIEW

SCALE

0' 1' 2' 3'

1" = 1'-0" (FULL)

NO.	DATE	REVISION	APP.

PAPE-DAWSON

2107 CITYWEST BLVD, 3RD FLR I HOUSTON, TX 77042 I 713.428.2400

TEXAS ENGINEERING FIRM #470 I TEXAS SURVEYING FIRM #10028800

V&A Consulting Engineers, Inc.
15720 Park Row, Suite 500
Houston, TX 77084 Tel. (713) 568-9067
F-9154
V&A Project No.: 22-0426

INTERIM REVIEW ONLY

Document incomplete: not intended for regulatory approval, permit, or construction.

JAMES VAUGHAN HARSHMAN
Engineer
153247
Registration Number
09/02/2025
Date

SURVEYED BY:
PAPE-DAWSON ENGINEERS
FB NO. 24-018

V&A CONSULTING ENGINEERS, INC.
Texas Registered Engineering Firm F-9154

CITY OF HOUSTON
HOUSTON PUBLIC WORKS

LIFT STATION REHABILITATION AND RECONSTRUCTION
BEN'S BRANCH, WOODLAND RIDGE, ELMWOOD HILLS, FOREST SHORES, TRAIL RIVER, RIVERLAWN

RIVERLAWN LIFT STATION ODOR CONTROL SYSTEM CARBON ADSORBER PLAN AND SECTION VIEW

WBS NUMBER	FOR CITY OF HOUSTON USE ONLY
R-000267-0180-3	
DRAWING SCALE	
AS NOTED	
CITY OF HOUSTON PM	
BRENDA JOHNSON P.E.	
SHEET NO. OF	

DWG No. O-1

FILE PATH: E:\Projects\2022\0400 Thru 0499\22-0426 Var City Of Houston\500 Drawings\DESIGN\60%\60% Odor Sheets\08 RiverLawn\22-0426 Var City Of Houston River Lawn Odor Control Detail.dwg

ODOR CONTROL SYSTEM ELECTRICAL CONTROL PANEL

LEGEND

- dP-X — Differential Pressure Gauge
- DV-XX — Manual Damper Butterfly Valve
- FC-XX — Flexible Duct Connection
- BV-XX — 2 Way Manual Ball Valve
- FXX_XXX — Flange Connection (size per chart)
- WL_XXX — Water Trap
- Drain

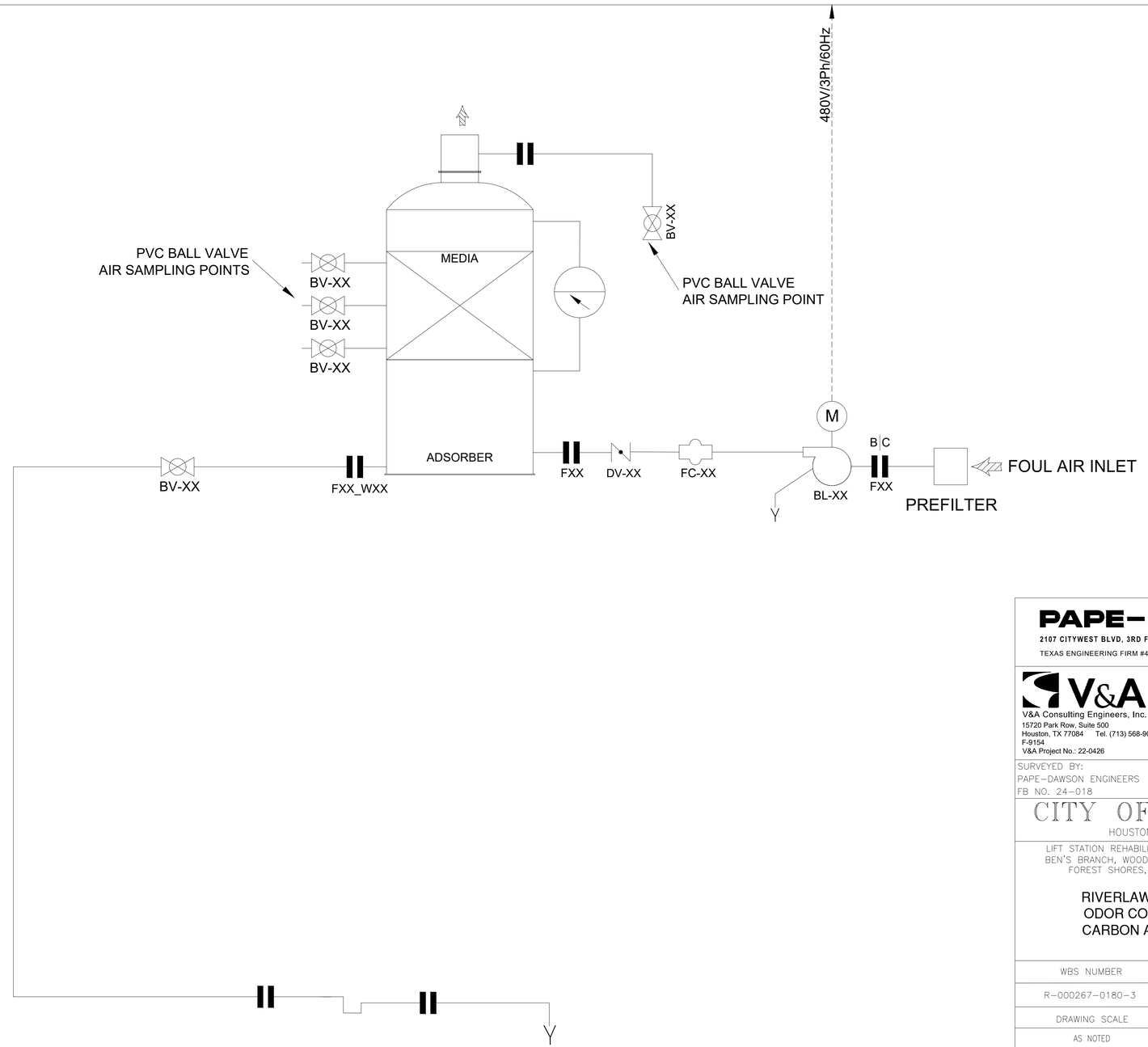

REVISION | NO. | DATE | APP.

PAPE-DAWSON
2107 CITYWEST BLVD, 3RD FLR I HOUSTON, TX 77042 I 713.428.2400
TEXAS ENGINEERING FIRM #470 I TEXAS SURVEYING FIRM #10028800

V&A Consulting Engineers, Inc.
15720 Park Row, Suite 500
Houston, TX 77084 Tel. (713) 568-9067
F-9154
V&A Project No.: 22-0426

INTERIM REVIEW ONLY
Document incomplete: not intended for regulatory approval, permit, or construction.
JAMES VAUGHAN HARSHMAN
Engineer
153247
Registration Number
09/02/2025
Date

SURVEYED BY:
PAPE-DAWSON ENGINEERS
FB NO. 24-018

V&A CONSULTING ENGINEERS, INC.
Texas Registered Engineering Firm
F-9154

CITY OF HOUSTON
HOUSTON PUBLIC WORKS

LIFT STATION REHABILITATION AND RECONSTRUCTION
BEN'S BRANCH, WOODLAND RIDGE, ELMWOOD HILLS,
FOREST SHORES, TRAIL RIVER, RIVERLAWN

RIVERLAWN LIFT STATION
ODOR CONTROL SYSTEM
CARBON ADSORBER P&ID

WBS NUMBER	FOR CITY OF HOUSTON USE ONLY
R-000267-0180-3	
DRAWING SCALE	
AS NOTED	
CITY OF HOUSTON PM	
BRENDA JOHNSON P.E.	
SHEET NO. OF	

DWG No.
O-2

FILE PATH: E:\Projects\2022\0400 Thru 0499\22-0426 Var City Of Houston\500 Drawings\DESIGN\60%\60% Odor Sheets\08 RiverLawn\22-0426 Var City Of Houston River Lawn Odor Control Detail.dwg

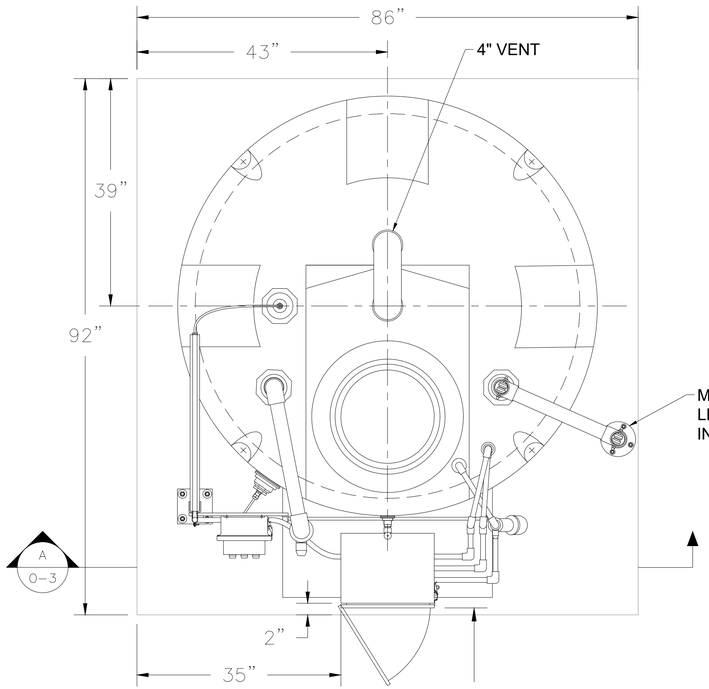

1 O-3 CHEMICAL FEED TANK – PLAN VIEW

SCALE

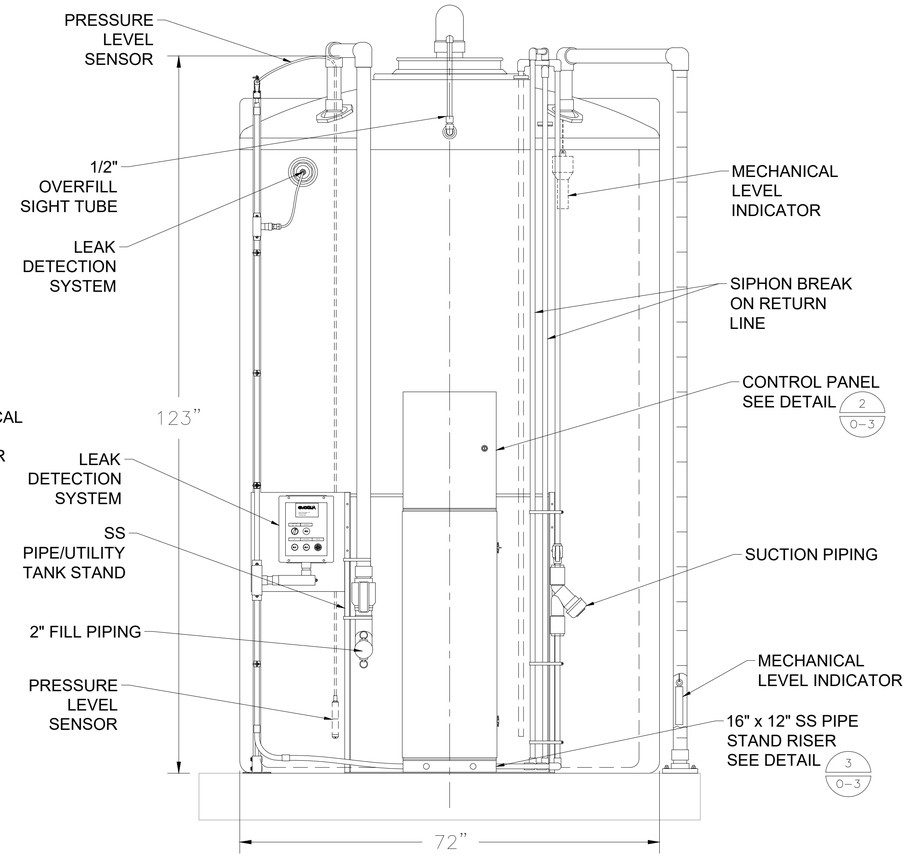

A O-3 CHEMICAL FEED TANK – SECTION VIEW

SCALE

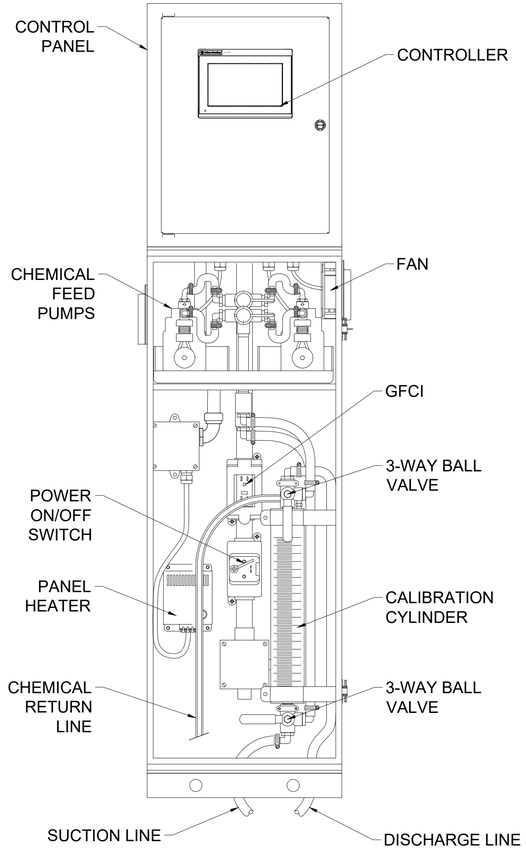

2 O-3 CHEMICAL FEED TANK CONTROL PANEL

NTS

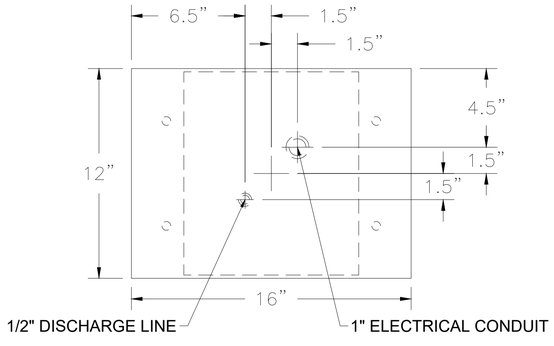

4 O-3 RISER/SLAB PENETRATION DETAIL

NTS

0' 1' 2' 3'

1" = 1'-0" (FULL)

DWG No. O-3

NO.	DATE	REVISION	APP.

PAPE-DAWSON

2107 CITYWEST BLVD, 3RD FLR I HOUSTON, TX 77042 I 713.428.2400

TEXAS ENGINEERING FIRM #470 I TEXAS SURVEYING FIRM #10028800

V&A

V&A Consulting Engineers, Inc.
15720 Park Row, Suite 500
Houston, TX 77084 Tel. (713) 568-9067
F-9154
V&A Project No.: 22-0426

INTERIM REVIEW ONLY
Document incomplete; not intended for regulatory approval, permit, or construction.
JAMES VAUGHAN HARSHMAN
Engineer
153247
Registration Number
09/02/2025
Date

SURVEYED BY:
PAPE-DAWSON ENGINEERS
FB NO. 24-018

V&A CONSULTING ENGINEERS, INC.
Texas Registered Engineering Firm
F-9154

CITY OF HOUSTON
HOUSTON PUBLIC WORKS

LIFT STATION REHABILITATION AND RECONSTRUCTION
BEN'S BRANCH, WOODLAND RIDGE, ELMWOOD HILLS,
FOREST SHORES, TRAIL RIVER, RIVERLAWN

RIVERLAWN LIFT STATION
ODOR CONTROL SYSTEM
CHEMICAL FEED

WBS NUMBER	FOR CITY OF HOUSTON USE ONLY
R-000267-0180-3	
DRAWING SCALE	
AS NOTED	
CITY OF HOUSTON PM	
BRENDA JOHNSON P.E.	
SHEET NO. OF	

FILE PATH: E:\Projects\2022\0400 Thru 0499\22-0426 Var City Of Houston\500 Drawings\DESIGN\60%\60% Odor Sheets\08 RiverLawn\22-0426 Var City Of Houston River Lawn Odor Control Detail.dwg

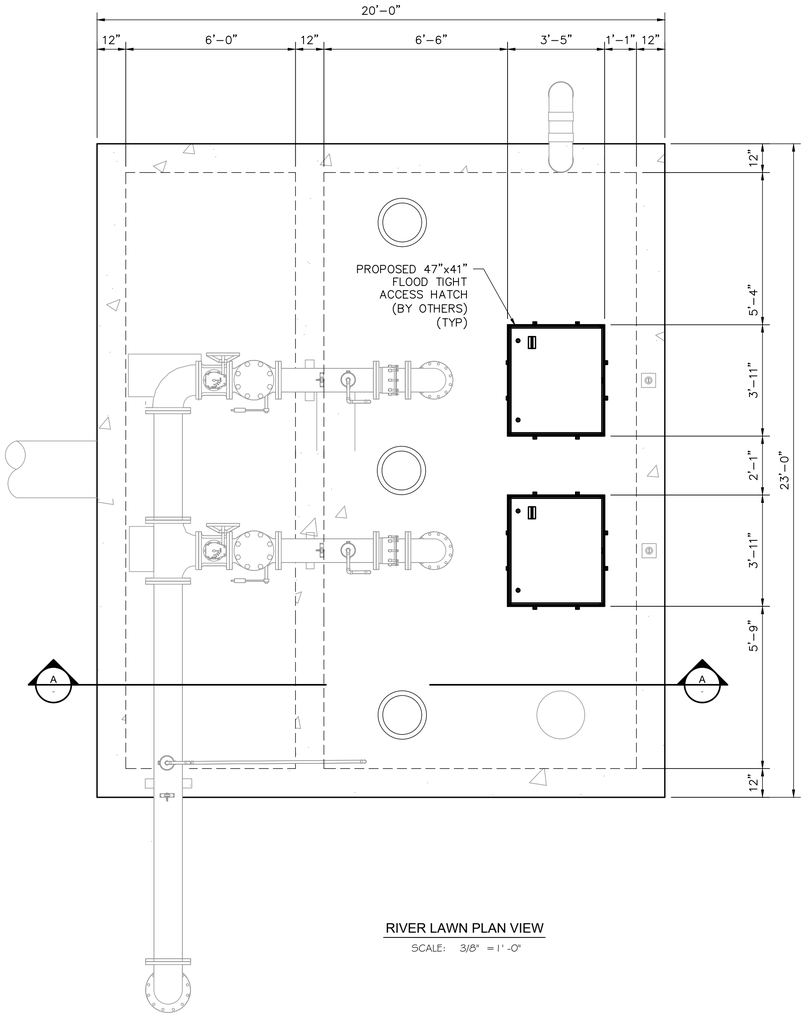

RIVER LAWN PLAN VIEW

SCALE: 3/8" = 1'-0"

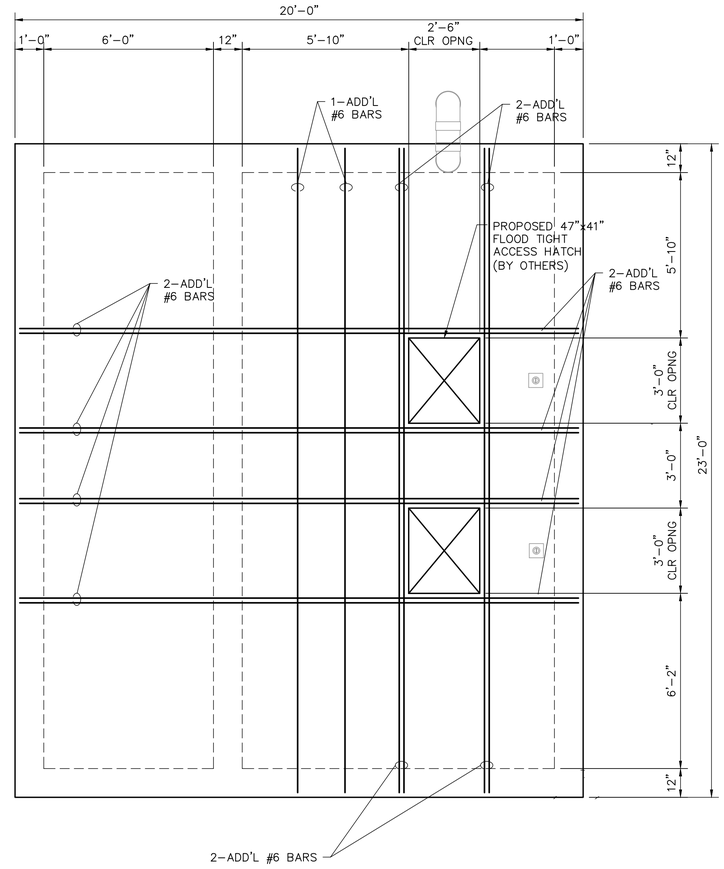

REINFORCING PLAN VIEW

SCALE: 3/8" = 1'-0"

STIVER ENGINEERING

1305 Peden Street
Houston, Texas 77006
P (713) 526-3478
stivereng.com
TX Registration No. F-190

PAPE-DAWSON

2107 CITYWEST BLVD, 3RD FLR I HOUSTON, TX 77042 I 713 428 4000
TEXAS ENGINEERING FIRM #470 I TEXAS SURVEYING FIRM #10028800

SURVEYED BY:
PAPE-DAWSON ENGINEERS
FB NO. 24-018

FOR INTERIM
THIS DOCUMENT IS RELEASED FOR THE PURPOSE OF INTERIM REVIEW UNDER THE AUTHORITY OF JOHN M. STIVER
105179
10/16/25
THIS DOCUMENT IS NOT INTENDED FOR BIDDING, PERMITTING AND/OR CONSTRUCTION PURPOSES
REVIEW ONLY

CITY OF HOUSTON

HOUSTON PUBLIC WORKS

LIFT STATION REHABILITATION AND RECONSTRUCTION
BEN'S BRANCH, WOODLAND RIDGE, ELMWOOD HILLS, FOREST SHORES, TRAIL RIVER, RIVERLAWN

STRUCTURAL

RIVERLAWN

PLAN VIEW, REINFORCING PLAN VIEW AND SECTION A

WBS NUMBER	FOR CITY OF HOUSTON USE ONLY
R-000267-0180-3	
DRAWING SCALE	
CITY OF HOUSTON PM	
BRENDA JOHNSON P.E.	
SHEET NO. 310 OF	

RL-S-01

FILE PATH: F:\SE\PROJECTS\2023 Projects\23154.2-Pape-Dawson-Amir Shokouhi-COH LS Rehab For 6 Lift Stations Pkg 2-Phase II Design\CADD FILES\23154.2 CADD\River Lawn LS\CAD 23154.2 - RIVER LAWN\23154.2_RIVER LAWN LS TOP SLAB.dwg

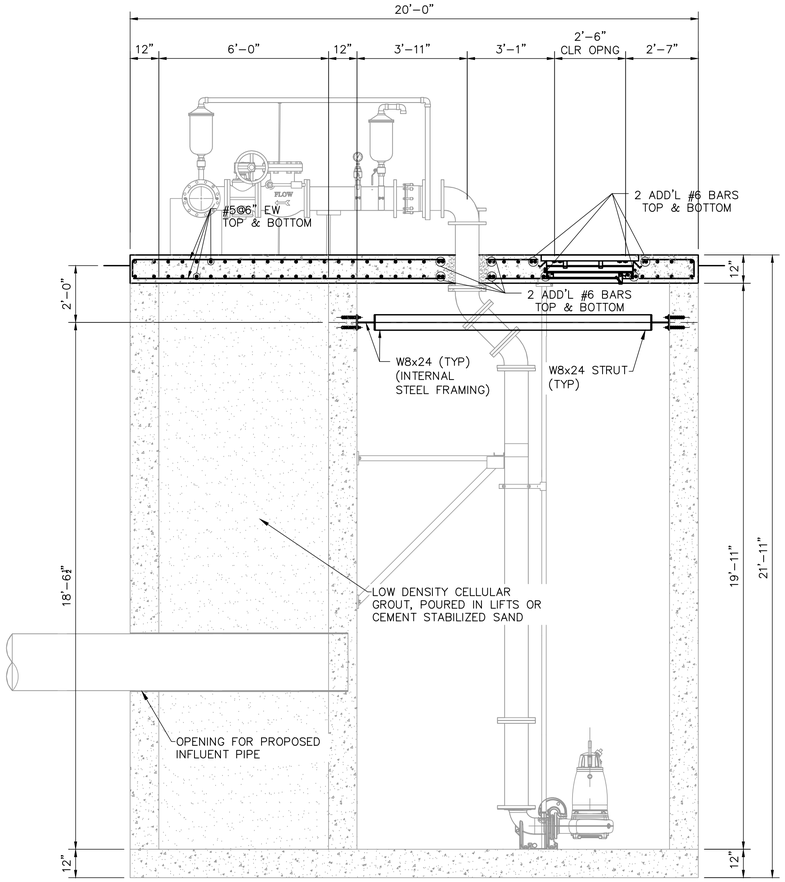

SECTION A

SCALE: 3/8" = 1'-0"

NOTE:

1. FLOWABLE BACKFILL MUST BE PLACED IN 12" LIFTS AND MUST COMPLY WITH SPECIFICATION 02322. THE PLACEMENT INTERVALS MUST NOT BE EARLIER THAN 24 HOURS BETWEEN DIFFERENT LIFTS. THE FLOWABLE FILL MUST HAVE 100 PSI COMPRESSIVE STRENGTH AT 7 DAYS.

2. CONTRACTOR TO REFER MECHANICAL AND CIVIL DRAWINGS AND VERIFY ELEVATIONS, PIPE SIZES, PUMP AND PUMP HATCH DIMENSIONS.

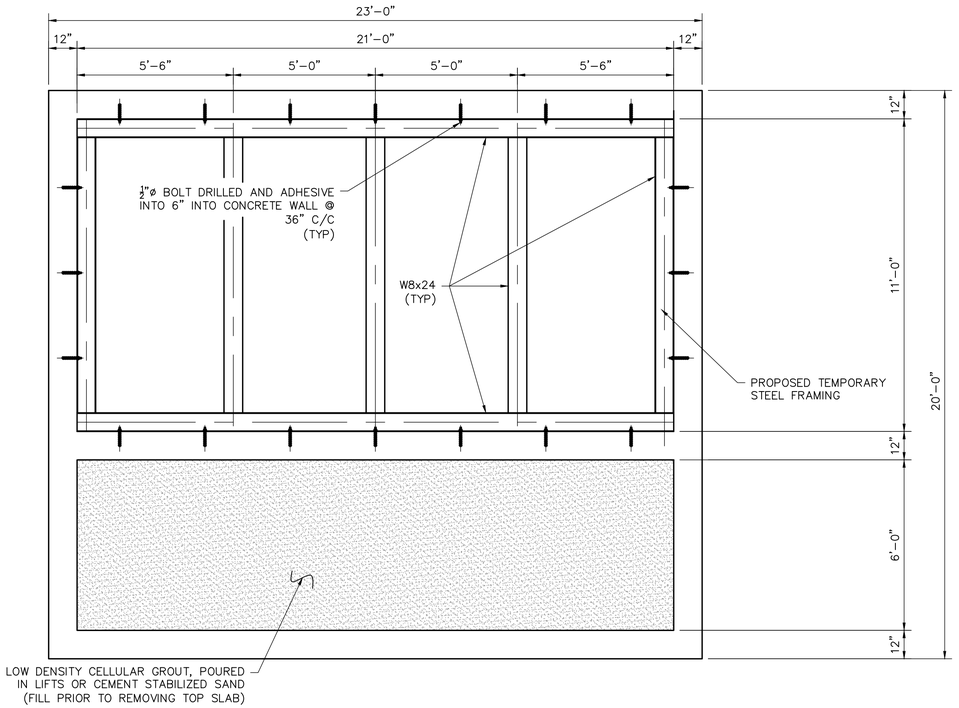

WALL SUPPORT PLAN VIEW

SCALE: 3/8" = 1'-0"

STIVER ENGINEERING
1305 Peden Street
Houston, Texas 77006
P (713) 526-3478
stivereng.com
TX Registration No. F-190

PAPE-DAWSON
2107 CITYWEST BLVD, 3RD FLR I HOUSTON, TX 77042 I 713 462 4200
TEXAS ENGINEERING FIRM #470 I TEXAS SURVEYING FIRM #10028800

FOR INTERIM
THIS DOCUMENT IS RELEASED FOR THE PURPOSE OF INTERIM REVIEW UNDER THE AUTHORITY OF JOHN M. STIVER 105179 10/16/25 THIS DOCUMENT IS NOT INTENDED FOR BIDDING, PERMITTING AND/OR CONSTRUCTION PURPOSES
REVIEW ONLY

SURVEYED BY:
PAPE-DAWSON ENGINEERS
FB NO. 24-018

CITY OF HOUSTON
HOUSTON PUBLIC WORKS

LIFT STATION REHABILITATION AND RECONSTRUCTION
BEN'S BRANCH, WOODLAND RIDGE, ELMWOOD HILLS, FOREST SHORES, TRAIL RIVER, RIVERLAWN

STRUCTURAL
RIVERLAWN SECTION A AND WALL SUPPORT PLAN VIEW

WBS NUMBER	FOR CITY OF HOUSTON USE ONLY
R-000267-0180-3	
DRAWING SCALE	
CITY OF HOUSTON PM	
BRENDA JOHNSON P.E.	
SHEET NO. 311 OF	

RL-S-02

FILE PATH: F:\SE\PROJECTS\2023 Projects\23154.2-Pape-Dawson-Amir Shokouhi-COH LS Rehab For 6 Lift Stations Pkg 2-Phase II Design\CADD FILES\23154.2 CADD\River Lawn LS\CAD 23154.2 - RIVER LAWN\23154.2_RIVER LAWN LS TOP SLAB.dwg

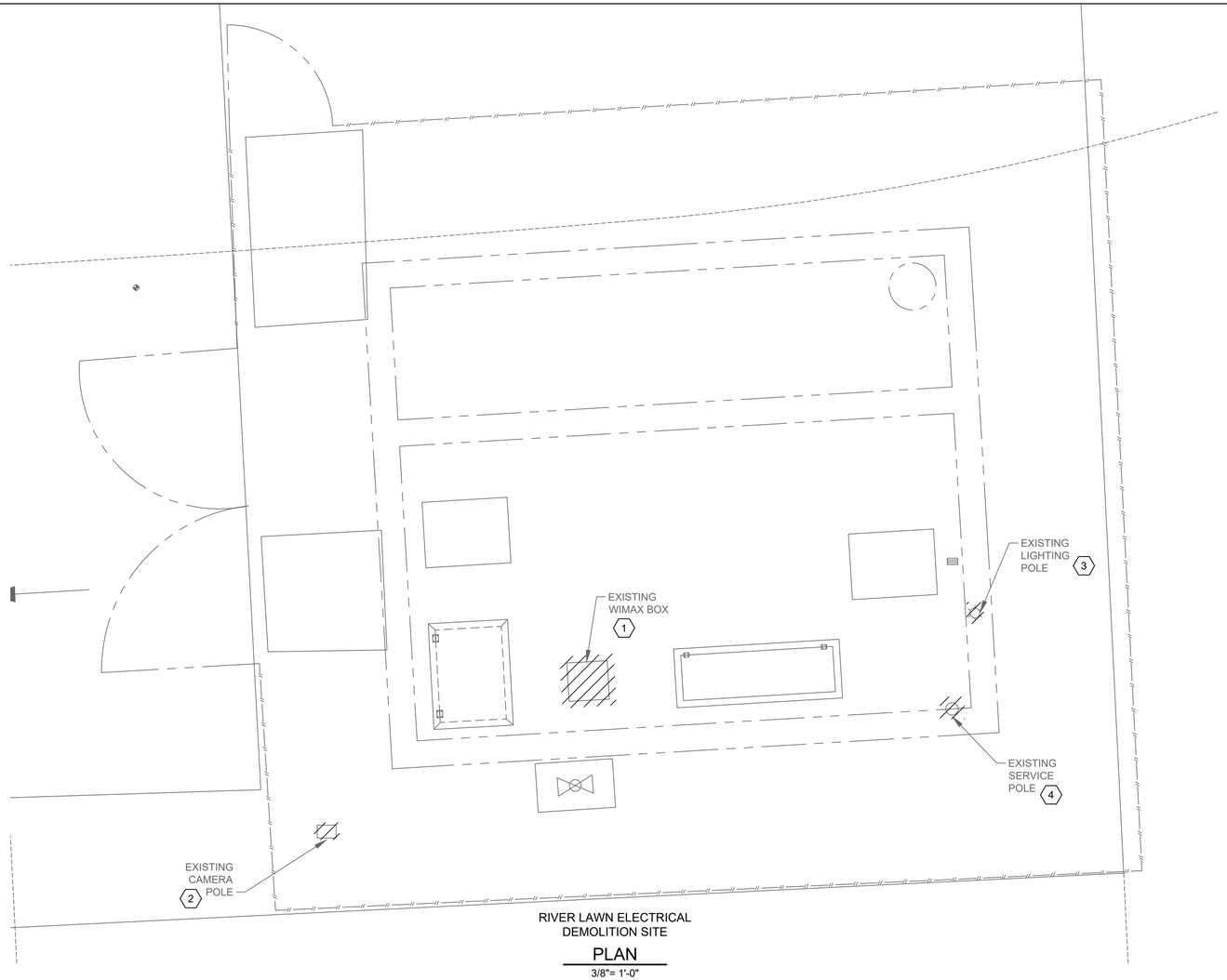

RIVER LAWN ELECTRICAL
DEMOLITION SITE

PLAN

3/8"= 1'-0"

NOTES BY SYMBOL "⟨#⟩":

1. EXISTING SERVICE POLE, METER. METER DISCONNECT SWITCH, AND ASSOCIATED CONDUITS AND WIRES TO BE DEMOLISHED AND REMOVED.
2. EXISTING CONTROL PANEL AND ASSOCIATED CONDUITS AND WIRES TO BE DEMOLISHED AND REMOVED.
3. EXISTING STARTER PANEL, HIGH LEVEL PANEL, AND ASSOCIATED CONDUITS AND WIRES IN DRY PIT TO BE DEMOLISHED AND REMOVED.
4. EXISTING LIGHT FIXTURES, LIGHT SWITCHES, RECEPTACLES, PANELS AND ASSOCIATED CONDUITS AND WIRES IN DRY PIT TO BE DEMOLISHED AND REMOVED.
5. EXISTING PPU AND ASSOCIATED CONDUITS AND WIRES TO BE DEMOLISHED AND REMOVED.
6. EXISTING POLE LIGHT AND ASSOCIATED CONDUITS AND WIRES TO BE DEMOLISHED AND REMOVED.
7. EXISTING WIMAX POLE AND ASSOCIATED CONDUITS AND WIRES TO BE DEMOLISHED AND REMOVED.

SCALE: 1"= 2'

0' 2' 4' 6'

EXISTING METER, METER DISCONNECT SWITCH AND SERVICE POLE ⟨1⟩⟨6⟩

PHOTOGRAPH A
NTS

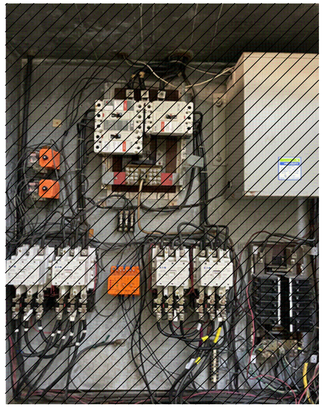

EXISTING CONTROL PANEL ⟨2⟩

PHOTOGRAPH B
NTS

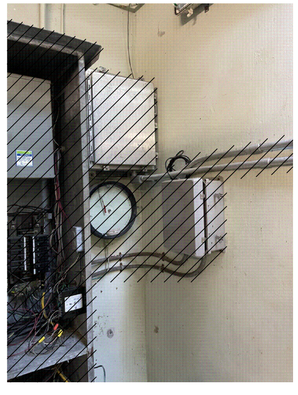

EXISTING CONTROL PANEL & CHART RECORDER ⟨2⟩⟨3⟩

PHOTOGRAPH C
NTS

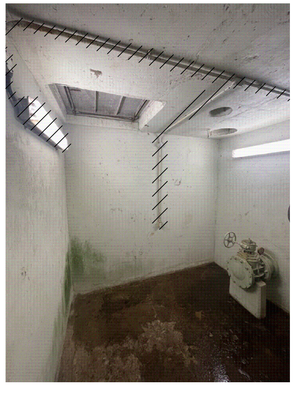

EXISTING CONTROL PANEL & CHART RECORDER ⟨4⟩

PHOTOGRAPH D
NTS

EXISTING PPU ⟨5⟩

PHOTOGRAPH E
NTS

EXISTING WIMAX POLE ⟨7⟩

PHOTOGRAPH F
NTS

NO.	DATE	REVISION	APP.

NOTICE:
FOR YOUR SAFETY, YOU ARE REQUIRED BY TEXAS LAW TO CALL 811 AT LEAST 48 HOURS BEFORE YOU DIG SO THAT UNDERGROUND LINES CAN BE MARKED. THIS SIGNATURE DOES NOT FULFILL YOUR OBLIGATION TO CALL 811

VERIFICATION OF PRIVATE UTILITY LINES

Date

CenterPoint Energy natural gas utilities shown. (Gas service lines are not shown). This signature not be used for conflict verification.

Signature valid for six months.

Date

CenterPoint Energy/UNDERGROUND Electrical Facilities Verification ONLY. (This signature verifies existing underground facilities – not to be used for conflict verification)

Signature valid for six months.

Date

Approved for AT&T underground conduit facilities only.
Signature valid for one year.

PAPE–DAWSON
2107 CITYWEST BLVD, 3RD FLR I HOUSTON, TX 77042 I 713.428.2400
TEXAS ENGINEERING FIRM #470 I TEXAS SURVEYING FIRM #10028800

GAI
Gupta & Associates, Inc.
CONSULTING ENGINEERING
Registration No. F-2593
302 Dennis St.
Houston, Texas 77006
Tel: 713-636-2936
Fax: 713-636-2987
email: hforouzan@gaiconsulting.com

SURVEYED BY:
PAPE–DAWSON ENGINEERS
FB NO. 24–018

THIS DOCUMENT IS RELEASED FOR INTERIM REVIEW UNDER THE AUTHORIZATION OF HOSS FOROUZAN, P.E. (#77748) AND IS **NOT TO BE USED FOR CONSTRUCTION.**

CITY OF HOUSTON
HOUSTON PUBLIC WORKS

LIFT STATION REHABILITATION AND RECONSTRUCTION
BEN'S BRANCH, WOODLAND RIDGE, ELMWOOD HILLS, FOREST SHORES, TRAIL RIVER, RIVERLAWN

ELECTRICAL

RIVERLAWN LIFT STATION ELECTRICAL EXISTING SITE PLAN

WBS NUMBER	FOR CITY OF HOUSTON USE ONLY
R–000267–0180–3	
DRAWING SCALE	
AS NOTED	
CITY OF HOUSTON PM	
BRENDA JOHNSON P.E.	
SHEET NO. XX OF XX	

RL–E–01

FILE PATH: O:\H8107_Lift Station Rehabilitation And Reconstruction (Pape Dawson)\6 Drawings\Electrical\Working\River Lawn\H8107_RL–E–01.dwg

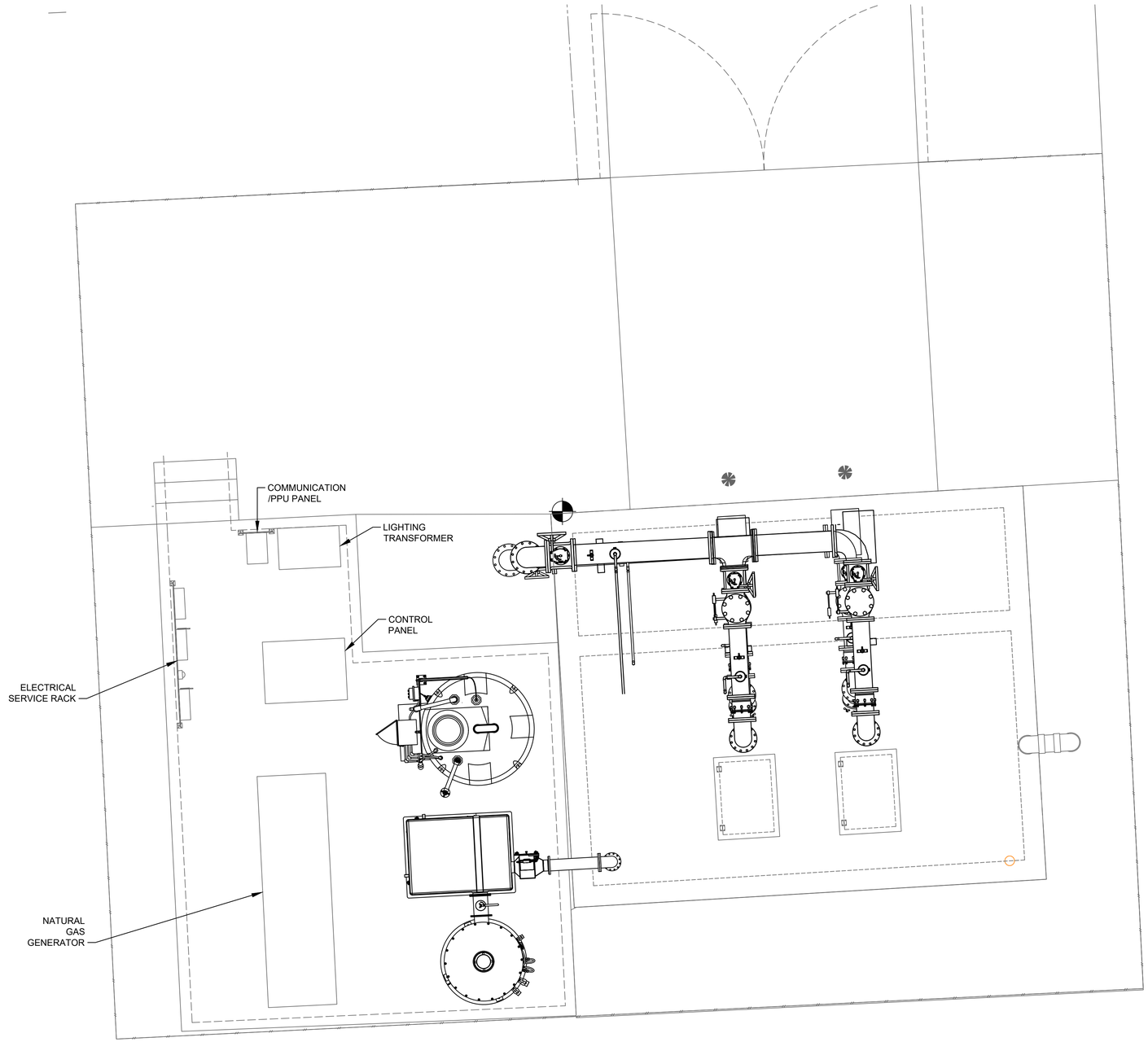

RIVER LAWN ELECTRICAL
PROPOSED SITE
PLAN
1"= 3'-0"

NO.	DATE	REVISION	APP.

SCALE: 1"= 3'

0' 3' 6' 9'

NOTICE:
FOR YOUR SAFETY, YOU ARE REQUIRED BY TEXAS LAW TO CALL 811 AT LEAST 48 HOURS BEFORE YOU DIG SO THAT UNDERGROUND LINES CAN BE MARKED. THIS SIGNATURE DOES NOT FULFILL YOUR OBLIGATION TO CALL 811

VERIFICATION OF PRIVATE UTILITY LINES

Date

CenterPoint Energy natural gas utilities shown. (Gas service lines are not shown). This signature not be used for conflict verification.

Signature valid for six months.

Date

CenterPoint Energy/UNDERGROUND Electrical Facilities Verification ONLY. (This signature verifies existing underground facilities – not to be used for conflict verification)

Signature valid for six months.

Date

Approved for AT&T underground conduit facilities only.
Signature valid for one year.

PAPE–DAWSON
2107 CITYWEST BLVD, 3RD FLR I HOUSTON, TX 77042 I 713.428.2400
TEXAS ENGINEERING FIRM #470 I TEXAS SURVEYING FIRM #10028800

GAI
Gupta & Associates, Inc.
CONSULTING ENGINEERING
Registration No. F-2593
302 Dennis St.
Houston, Texas 77006
Tel: 713-636-2936
Fax: 713-636-2987
email: hforouzan@gaiconsulting.com

SURVEYED BY:
PAPE–DAWSON ENGINEERS
FB NO. 24–018

THIS DOCUMENT IS RELEASED FOR INTERIM REVIEW UNDER THE AUTHORIZATION OF HOSS FOROUZAN, P.E. (#77748) AND IS **NOT TO BE USED FOR CONSTRUCTION.**

CITY OF HOUSTON
HOUSTON PUBLIC WORKS

LIFT STATION REHABILITATION AND RECONSTRUCTION
BEN'S BRANCH, WOODLAND RIDGE, ELMWOOD HILLS, FOREST SHORES, TRAIL RIVER, RIVERLAWN

ELECTRICAL

RIVERLAWN LIFT STATION ELECTRICAL PROPOSED SITE PLAN

WBS NUMBER	FOR CITY OF HOUSTON USE ONLY
R–000267–0180–3	
DRAWING SCALE	
AS NOTED	
CITY OF HOUSTON PM	
BRENDA JOHNSON P.E.	
SHEET NO. XX OF XX	

RL–E–02

FILE PATH: O:\H8107_Lift Station Rehabilitation And Reconstruction (Pape Dawson)\6 Drawings\Electrical\Working\River Lawn\H8107_RL–E–02.dwg

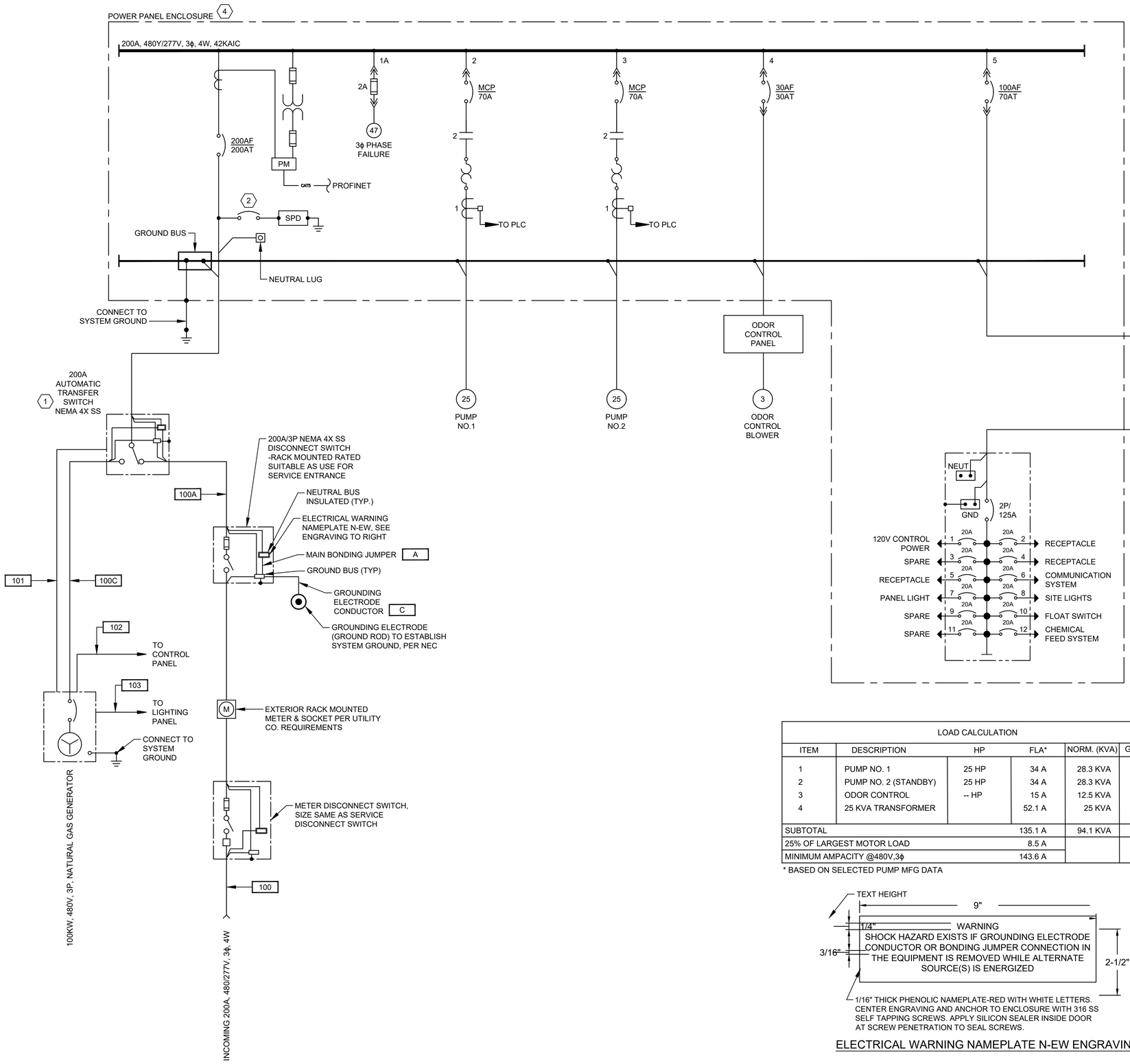

NOTES BY SYMBOL "#":

1. PROVIDE A NORMALLY OPEN (NO) AUXILIARY CONTACT ON BOTH ON POSITIONS.
2. PROVIDE BREAKER ACCORDING TO MANUFACTURER'S REQUIREMENTS.
3. POINT TO POINT METHOD IS USED FOR SHORT CIRCUIT CURRENT CALCULATION.
4. CONTRACTOR SHALL PROVIDE A PERMANENTLY AFFIXED LABEL (2' X 3") SHOWING THE AVAILABLE FAULT CURRENT AND CALCULATION DATE. THE LABEL SHALL BE BLUE LETTERING ON A CONTRASTING BACKGROUND.
5. THE INSULATION TYPES OF ALL ELECTRICAL CONDUCTORS USED IN THE PROJECT HAVE BEEN SPECIFIED IN ELECTRICAL SPECIFICATIONS (16120, 16121, AND 16122). THE TYPES OF CONDUITS USED IN THE PROJECT HAS BEEN SPECIFIED IN ELECTRICAL SPECIFICATIONS 16111.

NO.	DATE	REVISION	APP.

LOAD CALCULATION

ITEM	DESCRIPTION	HP	FLA*	NORM. (KVA)	GEN. (KVA)
1	PUMP NO. 1	25 HP	34 A	28.3 KVA	28.3 KVA
2	PUMP NO. 2 (STANDBY)	25 HP	34 A	28.3 KVA	-- KVA
3	ODOR CONTROL	-- HP	15 A	12.5 KVA	12.5 KVA
4	25 KVA TRANSFORMER		52.1 A	25 KVA	25 KVA
SUBTOTAL			135.1 A	94.1 KVA	65.8 KVA
25% OF LARGEST MOTOR LOAD			8.5 A		
MINIMUM AMPACITY @480V,3ϕ			143.6 A		

* BASED ON SELECTED PUMP MFG DATA

1/16" THICK PHENOLIC NAMEPLATE-RED WITH WHITE LETTERS. CENTER ENGRAVING AND ANCHOR TO ENCLOSURE WITH 316 SS SELF TAPPING SCREWS. APPLY SILICON SEALER INSIDE DOOR AT SCREW PENETRATION TO SEAL SCREWS.

ELECTRICAL WARNING NAMEPLATE N-EW ENGRAVING

NOTICE:
FOR YOUR SAFETY, YOU ARE REQUIRED BY TEXAS LAW TO CALL 811 AT LEAST 48 HOURS BEFORE YOU DIG SO THAT UNDERGROUND LINES CAN BE MARKED. THIS SIGNATURE DOES NOT FULFILL YOUR OBLIGATION TO CALL 811

VERIFICATION OF PRIVATE UTILITY LINES

Date

CenterPoint Energy natural gas utilities shown. (Gas service lines are not shown). This signature not be used for conflict verification.

Signature valid for six months.

Date

CenterPoint Energy/UNDERGROUND Electrical Facilities Verification ONLY. (This signature verifies existing underground facilities – not to be used for conflict verification)

Signature valid for six months.

Date

Approved for AT&T underground conduit facilities only.
Signature valid for one year.

PAPE–DAWSON
2107 CITYWEST BLVD, 3RD FLR I HOUSTON, TX 77042 I 713.428.2400
TEXAS ENGINEERING FIRM #470 I TEXAS SURVEYING FIRM #10028800

GAI
Gupta & Associates, Inc.
CONSULTING ENGINEERING
Registration No. F-2593
302 Dennis St.
Houston, Texas 77006
Tel: 713-636-2936
Fax: 713-636-2987
email: hforouzan@gaiconsulting.com

SURVEYED BY:
PAPE–DAWSON ENGINEERS
FB NO. 24–018

THIS DOCUMENT IS RELEASED FOR INTERIM REVIEW UNDER THE AUTHORIZATION OF HOSS FOROUZAN, P.E. (#77748) AND IS **NOT TO BE USED FOR CONSTRUCTION.**

CITY OF HOUSTON
HOUSTON PUBLIC WORKS

LIFT STATION REHABILITATION AND RECONSTRUCTION
BEN'S BRANCH, WOODLAND RIDGE, ELMWOOD HILLS, FOREST SHORES, TRAIL RIVER, RIVERLAWN

ELECTRICAL

RIVERLAWN LIFT STATION ELECTRICAL ONE–LINE DIAGRAM

WBS NUMBER	FOR CITY OF HOUSTON USE ONLY
R–000267–0180–3	
DRAWING SCALE	
AS NOTED	
CITY OF HOUSTON PM	
BRENDA JOHNSON P.E.	
SHEET NO. XX OF XX	

RL–E–03

FILE PATH: O:\H8107_Lift Station Rehabilitation And Reconstruction (Pape Dawson)\6 Drawings\Electrical\Working\River Lawn\H8107_RL–E–03.dwg

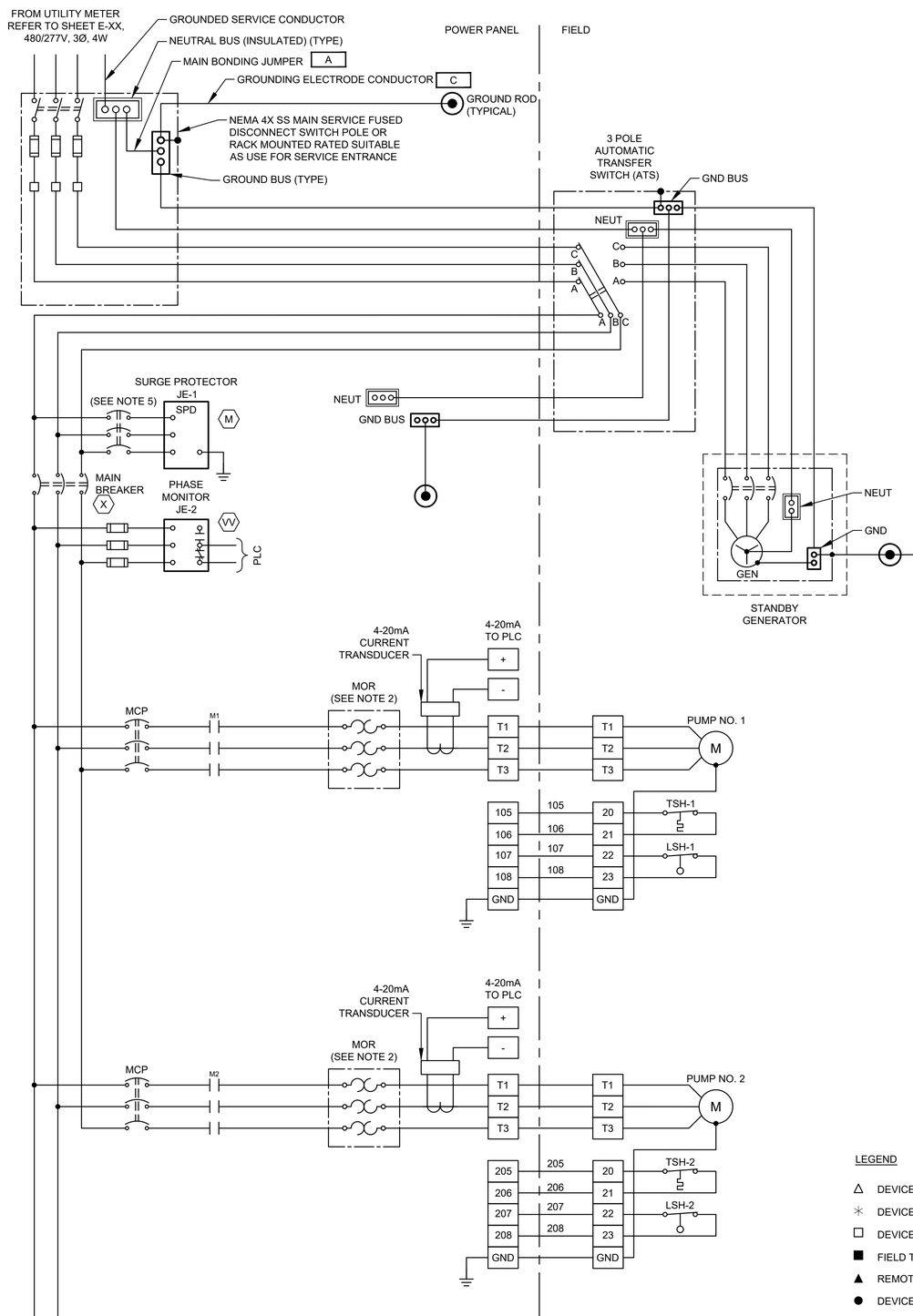

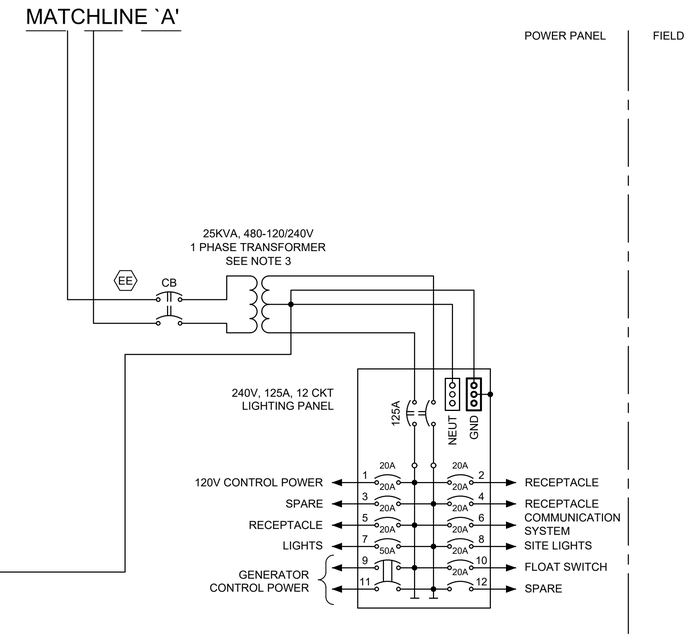

NOTES:

1. UNLESS OTHERWISE INDICATE, ALL DEVICES WITHOUT FURTHER DESIGNATION ARE LOCATED AT THE CONTROL PANEL.
2. THE COMBINATION OF CT AND MOTOR OVERLOAD RELAY IF REQUIRED.
3. CONTRACTOR TO REVISE DWG. BASED ON MANUFACTURE AND SIZE.
4. CONTRACTOR SHALL TERMINATE POWER & CONTROL WIRES PER MANUFACTURER'S REQUIREMENTS.
5. PROVIDE BREAKER SIZE ACCORDING TO MANUFACTURER'S REQUIREMENTS.

LEGEND

- △ DEVICE OR FIELD TERMINAL LOCATED AT MOTOR
- ✳ DEVICE OR FIELD TERMINAL LOCATED REMOTE
- □ DEVICE OR FIELD TERMINAL LOCATED AT POWER PANEL
- ■ FIELD TERMINAL LOCATED AT CONTROL PANEL
- ▲ REMOTE TERMINAL
- ● DEVICE TERMINAL NO.
- ◆ PC INTERFACE TERMINAL

NO.	DATE	REVISION	APP.

NOTICE:
FOR YOUR SAFETY, YOU ARE REQUIRED BY TEXAS LAW TO CALL 811 AT LEAST 48 HOURS BEFORE YOU DIG SO THAT UNDERGROUND LINES CAN BE MARKED. THIS SIGNATURE DOES NOT FULFILL YOUR OBLIGATION TO CALL 811

VERIFICATION OF PRIVATE UTILITY LINES

Date

CenterPoint Energy natural gas utilities shown. (Gas service lines are not shown). This signature not be used for conflict verification.

Signature valid for six months.

Date

CenterPoint Energy/UNDERGROUND Electrical Facilities Verification ONLY. (This signature verifies existing underground facilities – not to be used for conflict verification)

Signature valid for six months.

Date

Approved for AT&T underground conduit facilities only.
Signature valid for one year.

PAPE–DAWSON
2107 CITYWEST BLVD, 3RD FLR I HOUSTON, TX 77042 I 713.428.2400
TEXAS ENGINEERING FIRM #470 I TEXAS SURVEYING FIRM #10028800

GAI
Gupta & Associates, Inc.
CONSULTING ENGINEERING
Registration No. F-2593
302 Dennis St.
Houston, Texas 77006
Tel: 713-636-2936
Fax: 713-636-2987
email: hforouzan@guiconsulting.com

SURVEYED BY:
PAPE–DAWSON ENGINEERS
FB NO. 24–018

THIS DOCUMENT IS RELEASED FOR INTERIM REVIEW UNDER THE AUTHORIZATION OF HOSS FOROUZAN, P.E. (#77748) AND IS **NOT TO BE USED FOR CONSTRUCTION.**

CITY OF HOUSTON
HOUSTON PUBLIC WORKS

LIFT STATION REHABILITATION AND RECONSTRUCTION
BEN'S BRANCH, WOODLAND RIDGE, ELMWOOD HILLS, FOREST SHORES, TRAIL RIVER, RIVERLAWN

ELECTRICAL

RIVERLAWN LIFT STATION ELECTRICAL THREE LINE DIAGRAM

WBS NUMBER	FOR CITY OF HOUSTON USE ONLY
R–000267–0180–3	
DRAWING SCALE	
AS NOTED	
CITY OF HOUSTON PM	
BRENDA JOHNSON P.E.	
SHEET NO. XX OF XX	

RL–E–04

FILE PATH: O:\H8107_Lift Station Rehabilitation And Reconstruction (Pape Dawson)\6 Drawings\Electrical\Working\River Lawn\H8107_RL–E–04.dwg

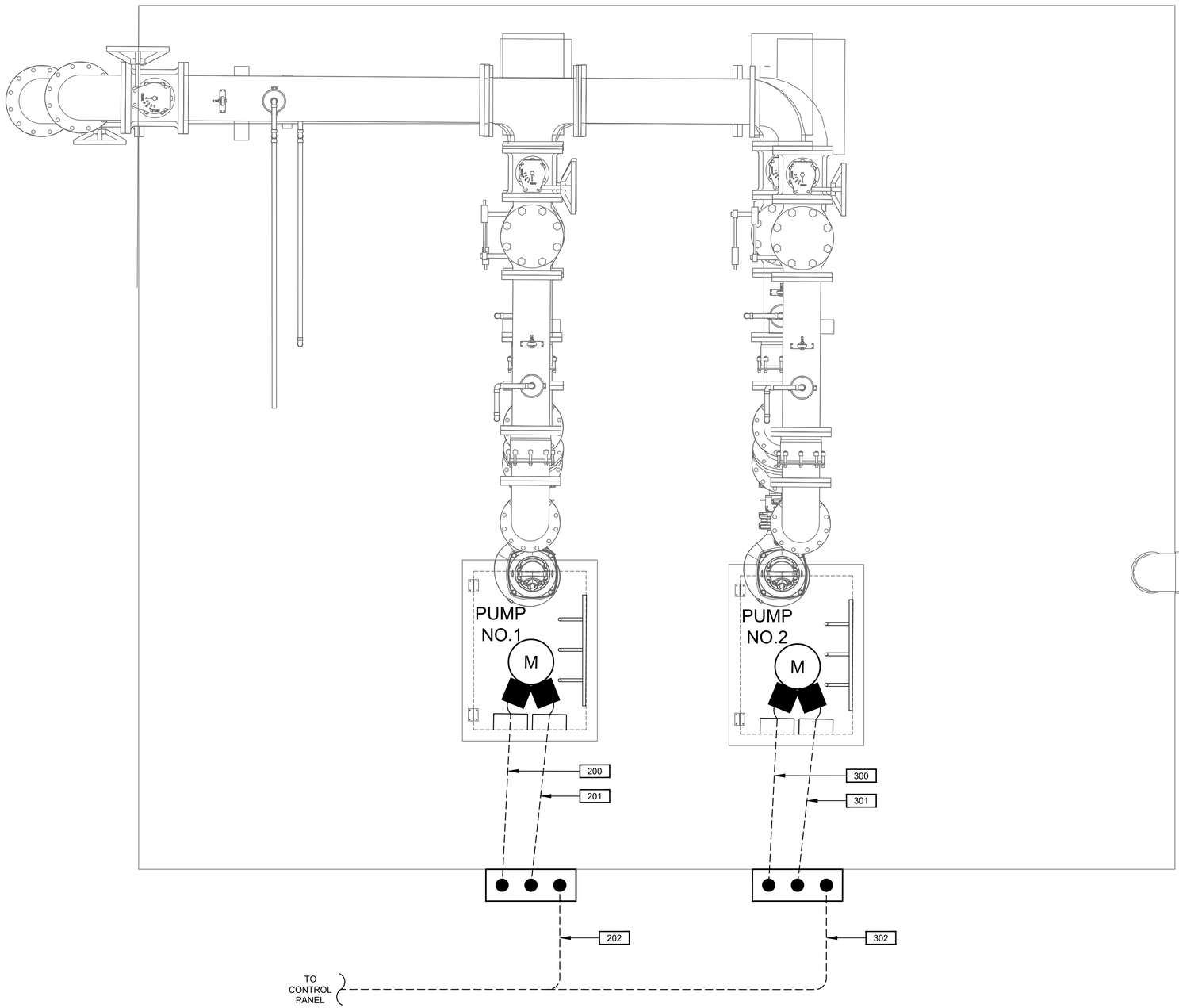

RIVERLAWN LIFT STATION
ENLARGED PLAN

PLAN

3/4"=1'-0"

NO.	DATE	REVISION	APP.

6" 0 1 2

SCALE: 3/4" = 1'-0"

NOTICE:
FOR YOUR SAFETY, YOU ARE REQUIRED BY TEXAS LAW TO CALL 811 AT LEAST 48 HOURS BEFORE YOU DIG SO THAT UNDERGROUND LINES CAN BE MARKED. THIS SIGNATURE DOES NOT FULFILL YOUR OBLIGATION TO CALL 811

VERIFICATION OF PRIVATE UTILITY LINES

Date

CenterPoint Energy natural gas utilities shown. (Gas service lines are not shown). This signature not be used for conflict verification.

Signature valid for six months.

Date

CenterPoint Energy/UNDERGROUND Electrical Facilities Verification ONLY. (This signature verifies existing underground facilities – not to be used for conflict verification)

Signature valid for six months.

Date

Approved for AT&T underground conduit facilities only.
Signature valid for one year.

PAPE-DAWSON
2107 CITYWEST BLVD, 3RD FLR I HOUSTON, TX 77042 I 713.428.2400
TEXAS ENGINEERING FIRM #470 I TEXAS SURVEYING FIRM #10028800

GAI
Gupta & Associates, Inc.
CONSULTING ENGINEERING
Registration No. F-2593
302 Dennis St.
Houston, Texas 77006
Tel: 713-636-2936
Fax: 713-636-2987
email: hforouzan@gaiconsulting.com

THIS DOCUMENT IS RELEASED FOR INTERIM REVIEW UNDER THE AUTHORIZATION OF HOSS FOROUZAN, P.E. (#77748) AND IS **NOT TO BE USED FOR CONSTRUCTION.**

SURVEYED BY:
PAPE-DAWSON ENGINEERS
FB NO. 24-018

CITY OF HOUSTON
HOUSTON PUBLIC WORKS

LIFT STATION REHABILITATION AND RECONSTRUCTION
BEN'S BRANCH, WOODLAND RIDGE, ELMWOOD HILLS, FOREST SHORES, TRAIL RIVER, RIVERLAWN

ELECTRICAL

RIVERLAWN LIFT STATION ELECTRICAL ENLARGED LIFT STATION PLAN

WBS NUMBER	FOR CITY OF HOUSTON USE ONLY
R-000267-0180-3	
DRAWING SCALE	
AS NOTED	
CITY OF HOUSTON PM	
BRENDA JOHNSON P.E.	
SHEET NO. XX OF XX	

RL-E-05

FILE PATH: O:\H8107_Lift Station Rehabilitation And Reconstruction (Pape Dawson)\6 Drawings\Electrical\Working\River Lawn\H8107_RL-E-05.dwg

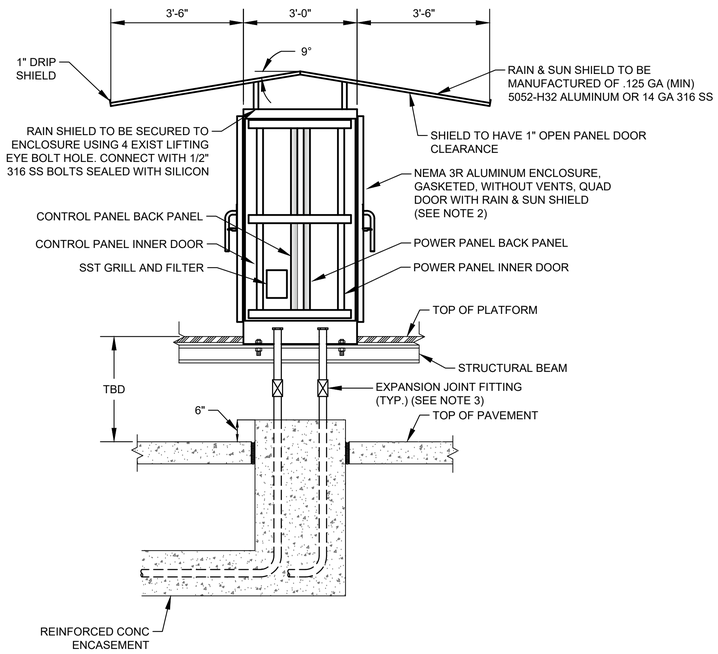

CONTROL CABINET ENCLOSURE WITH PLATFORM

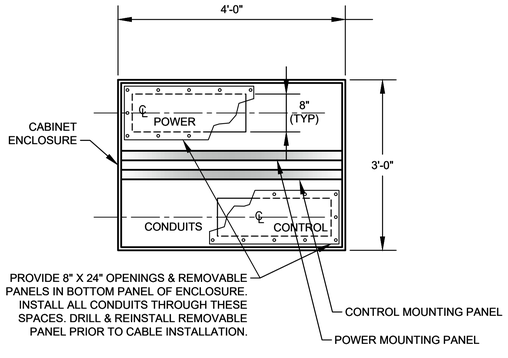

SECTION 2 / NTS -

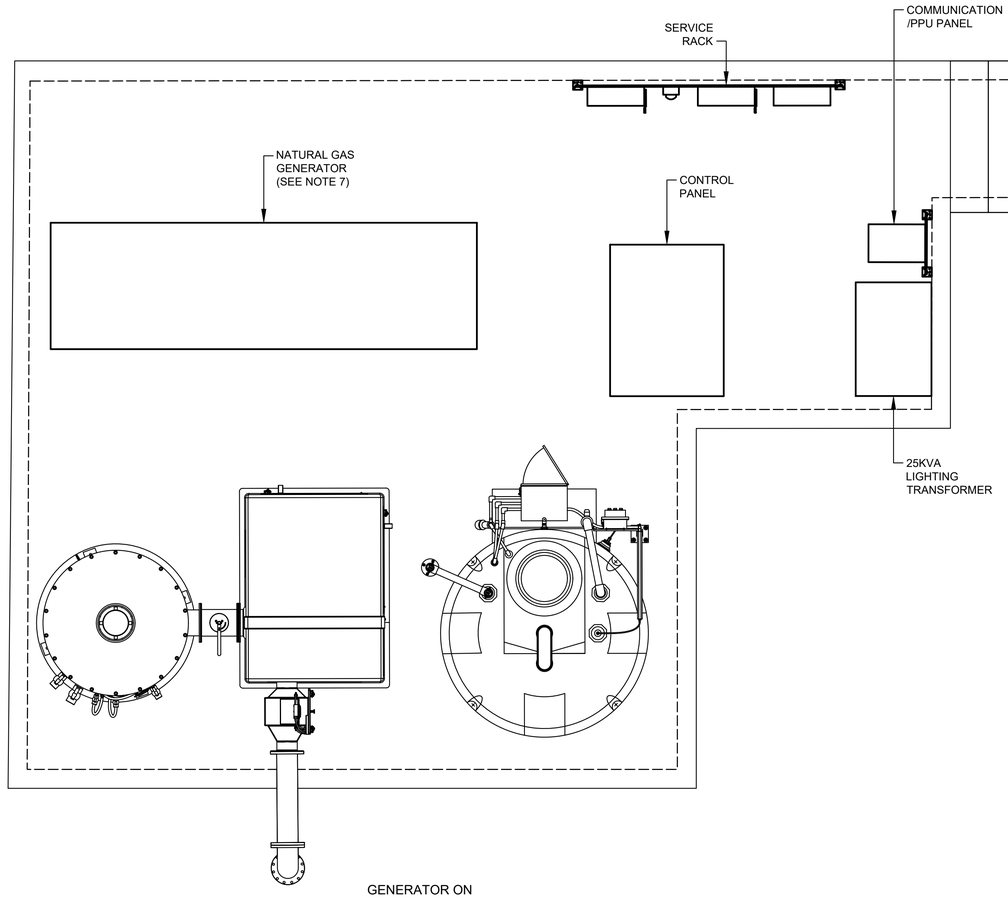

GENERATOR ON ELEVATED PLATFORM DETAIL

DETAIL 3 / 1/2" = 1'-0" -

NOTES:

1. SEE SHEET RL-I-04 FOR EQUIPMENT SCHEDULE.
2. REFER TO SPEC 13325-8 FOR PANEL DIMENSIONS.
3. EXPANSION JOINT FITTINGS AS REQUIRED.
4. REFER TO SERVICE RACK FOR DETAIL.
5. REFER TO STRUCTURAL DRAWINGS .
6. CONDUIT TO BE MOUNTED BELOW PLATFORM GRATING.
7. GENERATOR IS FOR EMERGENCY USE ONLY.

NO.	DATE	REVISION	APP.

NOTICE:
FOR YOUR SAFETY, YOU ARE REQUIRED BY TEXAS LAW TO CALL 811 AT LEAST 48 HOURS BEFORE YOU DIG SO THAT UNDERGROUND LINES CAN BE MARKED. THIS SIGNATURE DOES NOT FULFILL YOUR OBLIGATION TO CALL 811

VERIFICATION OF PRIVATE UTILITY LINES

Date

CenterPoint Energy natural gas utilities shown. (Gas service lines are not shown). This signature not be used for conflict verification.

Signature valid for six months.

Date

CenterPoint Energy/UNDERGROUND Electrical Facilities Verification ONLY. (This signature verifies existing underground facilities – not to be used for conflict verification)

Signature valid for six months.

Date

Approved for AT&T underground conduit facilities only.
Signature valid for one year.

PAPE-DAWSON
2107 CITYWEST BLVD, 3RD FLR I HOUSTON, TX 77042 I 713.428.2400
TEXAS ENGINEERING FIRM #470 I TEXAS SURVEYING FIRM #10028800

GAI
Gupta & Associates, Inc.
CONSULTING ENGINEERING
Registration No. F-2593
302 Dennis St.
Houston, Texas 77006
Tel: 713-636-2936
Fax: 713-636-2987
email: hforouzan@gaiconsulting.com

SURVEYED BY:
PAPE-DAWSON ENGINEERS
FB NO. 24-018

THIS DOCUMENT IS RELEASED FOR INTERIM REVIEW UNDER THE AUTHORIZATION OF HOSS FOROUZAN, P.E. (#77748) AND IS **NOT TO BE USED FOR CONSTRUCTION.**

CITY OF HOUSTON
HOUSTON PUBLIC WORKS

LIFT STATION REHABILITATION AND RECONSTRUCTION
BEN'S BRANCH, WOODLAND RIDGE, ELMWOOD HILLS, FOREST SHORES, TRAIL RIVER, RIVERLAWN

ELECTRICAL

RIVERLAWN LIFT STATION CONTROL CABINET ENCLOSURE DETAIL

WBS NUMBER	FOR CITY OF HOUSTON USE ONLY
R-000267-0180-3	
DRAWING SCALE	
AS NOTED	
CITY OF HOUSTON PM	
BRENDA JOHNSON P.E.	
SHEET NO. XX OF XX	

RL-E-06

FILE PATH: O:\H8107_Lift Station Rehabilitation And Reconstruction (Pape Dawson)\6 Drawings\Electrical\Working\River Lawn\H8107_RL-E-06.dwg

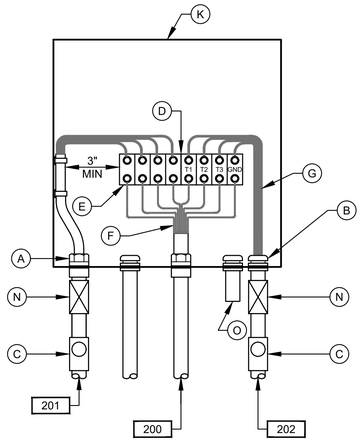

PUMP NO.1
JUNCTION BOX

DETAIL 3
NTS
(SEE NOTE 7)

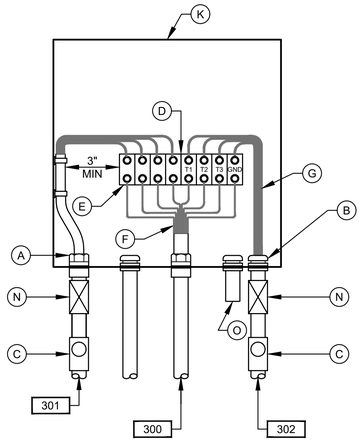

PUMP NO.2
JUNCTION BOX

DETAIL 4
NTS
(SEE NOTE 7)

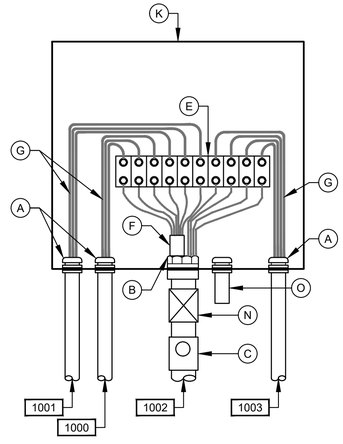

LEVEL TRANSMITTER
JUNCTION BOX

DETAIL 5
NTS
(SEE NOTE 7)

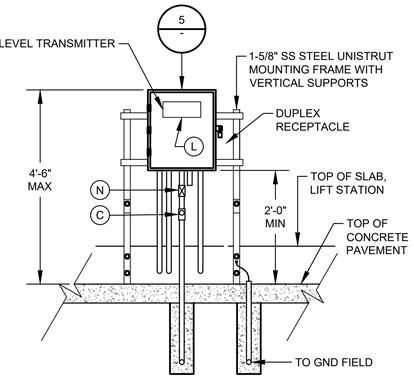

DETAIL 6
NTS
(SEE NOTE 9 & 12)

NOTES:

1. NAMEPLATES SHALL BE MOUNTED TO JUNCTION BOXES USING 316 STAINLESS STEEL HARDWARE.
2. MAINTAIN MINIMUM SEPARATION REQUIRED UNDER NEC ARTICLE 504, BETWEEN INTRINSICALLY SAFE CONTROL WIRING AND NON INTRINSICALLY SAFE MOTOR FEEDER WIRING.
3. UNLESS OTHERWISE NOTED, ALL EXTERIOR EXPOSED CONDUITS SHALL BE PVC COATED ALUMINUM.
4. UNLESS OTHERWISE NOTED, ALL NUTS, BOLTS, SCREWS WASHERS, ETC SHALL BE TYPE 316 STAINLESS STEEL.
5. ALL UNDERGROUND CONDUITS TO BE ENCASED IN REINFORCED CONCRETE DUCTBANK.
6. PROVIDE ANTI-CORROSIVE SPRAY ON ANY BARE METAL PARTS OR EXPOSED WIRE.
7. SEE WIRING SCHEMATICS FOR TERMINALS AND WIRE NUMBERS.
8. ANY CONDUIT REQUIRING A CSBE SEAL, SHALL BE A MINIMUM SIZE OF 2 1/2" PER CABLE.
9. DETAIL SHOWN MAY BE MODIFIED PER SITE SITUATION.
10. COORDINATE WITH WASTE WATER OPERATIONS ELECTRICAL ORGANIZATION FOR THE OPENING OF JUNCTION BOXES TO THE SIDE OF WET WELL IF REQUIRED DURING CONSTRUCTION.
11. THE ENCLOSURES WITH ELECTRICAL CIRCUITS SHALL BE A MINIMUM OF 5 FEET FROM ANY CLASSIFIED AREA, OTHERWISE EXPLOSION PROOF TYPE ENCLOSURES SHALL BE USED.

NO.	DATE	REVISION	APP.

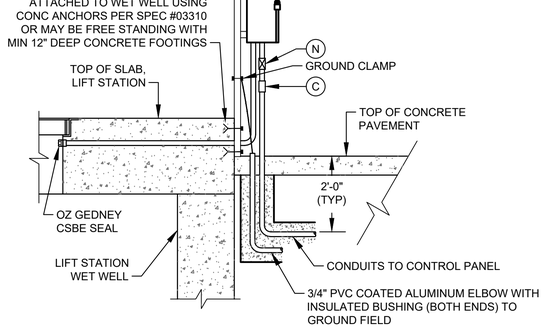

TYP SIDE VIEW FOR DETAIL 1, 2, & 6

(SEE NOTE 10)

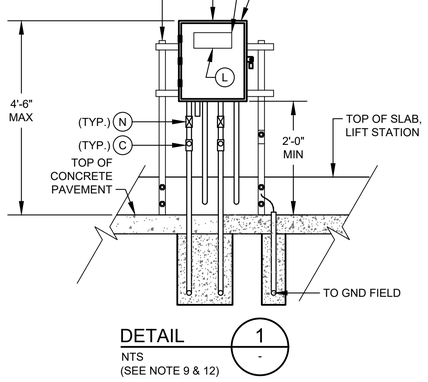

DETAIL 1
NTS
(SEE NOTE 9 & 12)

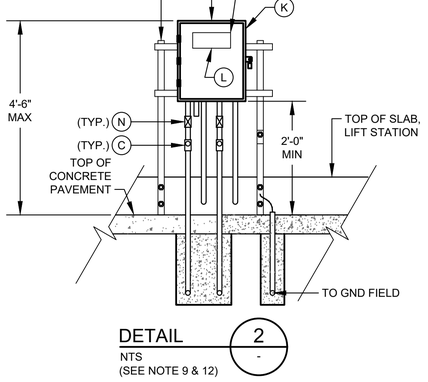

DETAIL 2
NTS
(SEE NOTE 9 & 12)

JUNCTION BOX EQUIPMENT SCHEDULE

A - OZ GEDNEY CSBE SEAL
B - WATERTIGHT CONDUIT HUB WITH INSULATED BUSHING
C - CLASS I, DIV 1, EXPLOSION PROOF SEAL INSTALLED PER NEC DIV 501
D - POWER TERMINAL BLOCK W/SCREW DOWN BOX LUGS
E - CONTROL TERM BLOCK W/SCREW DOWN BOX LUGS
F - MULTI-CONDUCTOR CABLE, REMOVE OUTER JACKET AS SHOWN
G - WIRING AS SCHEDULED
H - NOT USED.
I - NOT USED.
J - NOT USED
K - NEMA 6P STAINLESS STEEL JUNCTION BOX WITH GASKETED FRONT COVER, SINGLE QUARTER TURN, OIL-TIGHT LATCH AND PADLOCKING PROVISIONS, MINIMUM SIZE: 12"W X 16"H X 6"D
L - NAMEPLATE, SEE SPECIFICATIONES (SEE NAMEPLATE SCHEDULE)
M - NOT USED.
N - EXPANSION FITTING
O - DRAIN VENT

NOTICE:
FOR YOUR SAFETY, YOU ARE REQUIRED BY TEXAS LAW TO CALL 811 AT LEAST 48 HOURS BEFORE YOU DIG SO THAT UNDERGROUND LINES CAN BE MARKED. THIS SIGNATURE DOES NOT FULFILL YOUR OBLIGATION TO CALL 811

VERIFICATION OF PRIVATE UTILITY LINES

Date

CenterPoint Energy natural gas utilities shown. (Gas service lines are not shown). This signature not be used for conflict verification.

Signature valid for six months.

Date

CenterPoint Energy/UNDERGROUND Electrical Facilities Verification ONLY. (This signature verifies existing underground facilities – not to be used for conflict verification)

Signature valid for six months.

Date

Approved for AT&T underground conduit facilities only.
Signature valid for one year.

PAPE-DAWSON
2107 CITYWEST BLVD, 3RD FLR I HOUSTON, TX 77042 I 713.428.2400
TEXAS ENGINEERING FIRM #470 I TEXAS SURVEYING FIRM #10028800

GAI
Gupta & Associates, Inc.
CONSULTING ENGINEERING
Registration No. F-2593
302 Dennis St.
Houston, Texas 77006
Tel: 713-636-2936
Fax: 713-636-2987
email: hforouzan@gaiconsulting.com

SURVEYED BY:
PAPE-DAWSON ENGINEERS
FB NO. 24-018

THIS DOCUMENT IS RELEASED FOR INTERIM REVIEW UNDER THE AUTHORIZATION OF HOSS FOROUZAN, P.E. (#77748) AND IS **NOT TO BE USED FOR CONSTRUCTION.**

CITY OF HOUSTON
HOUSTON PUBLIC WORKS

LIFT STATION REHABILITATION AND RECONSTRUCTION
BEN'S BRANCH, WOODLAND RIDGE, ELMWOOD HILLS, FOREST SHORES, TRAIL RIVER, RIVERLAWN

ELECTRICAL

RIVERLAWN LIFT STATION TYPICAL JUNCTION BOX DETAILS

WBS NUMBER	FOR CITY OF HOUSTON USE ONLY
R-000267-0180-3	
DRAWING SCALE	
AS NOTED	
CITY OF HOUSTON PM	
BRENDA JOHNSON P.E.	
SHEET NO. XX OF XX	

RL-E-07

FILE PATH: O:\H8107_Lift Station Rehabilitation And Reconstruction (Pape Dawson)\6 Drawings\Electrical\Working\River Lawn\H8107_RL-E-07.dwg

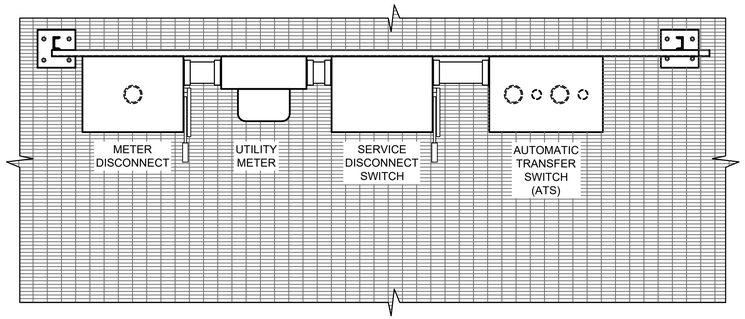

PLAN

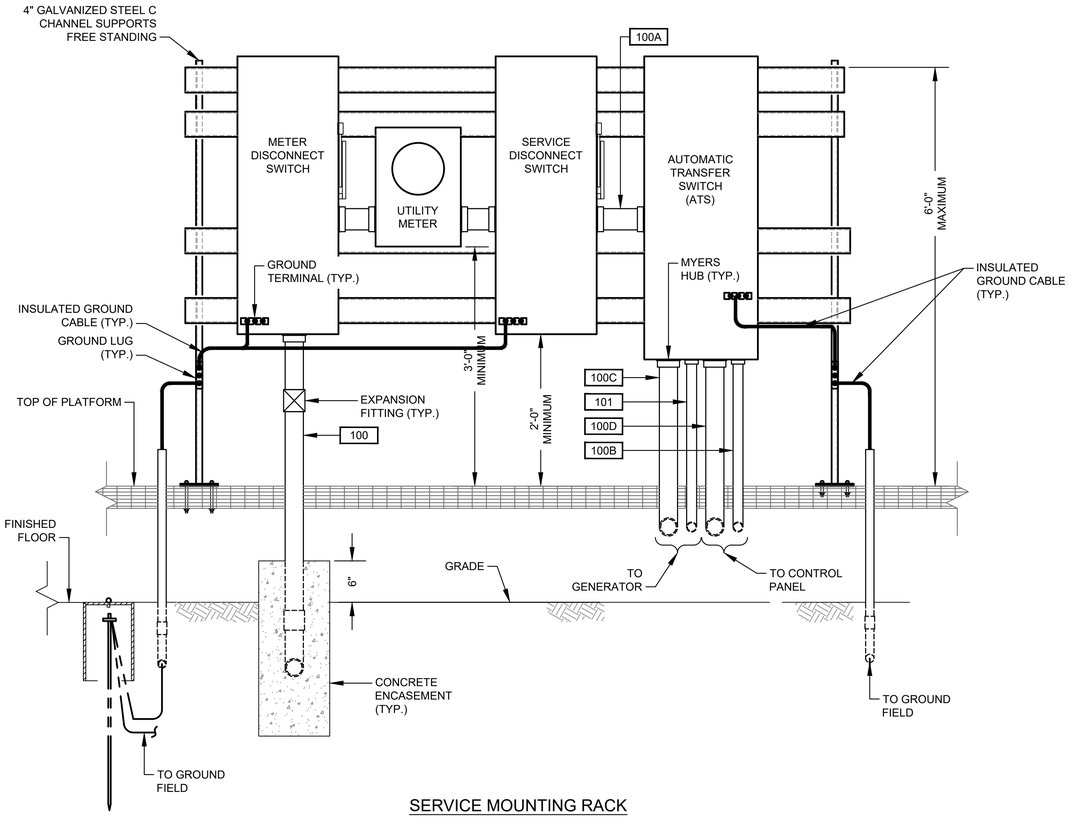

SERVICE MOUNTING RACK

DETAIL 1
NTS. -

NO.	DATE	REVISION	APP.

NOTICE:
FOR YOUR SAFETY, YOU ARE REQUIRED BY TEXAS LAW TO CALL 811 AT LEAST 48 HOURS BEFORE YOU DIG SO THAT UNDERGROUND LINES CAN BE MARKED. THIS SIGNATURE DOES NOT FULFILL YOUR OBLIGATION TO CALL 811

VERIFICATION OF PRIVATE UTILITY LINES

Date

CenterPoint Energy natural gas utilities shown. (Gas service lines are not shown). This signature not be used for conflict verification.

Signature valid for six months.

Date

CenterPoint Energy/UNDERGROUND Electrical Facilities Verification ONLY. (This signature verifies existing underground facilities – not to be used for conflict verification)

Signature valid for six months.

Date

Approved for AT&T underground conduit facilities only.
Signature valid for one year.

PAPE–DAWSON
2107 CITYWEST BLVD, 3RD FLR I HOUSTON, TX 77042 I 713.428.2400
TEXAS ENGINEERING FIRM #470 I TEXAS SURVEYING FIRM #10028800

GAI
Gupta & Associates, Inc.
CONSULTING ENGINEERING
Registration No. F-2593
302 Dennis St.
Houston, Texas 77006
Tel: 713-636-2936
Fax: 713-636-2987
email: hforouzan@gaiconsulting.com

SURVEYED BY:
PAPE–DAWSON ENGINEERS
FB NO. 24–018

THIS DOCUMENT IS RELEASED FOR INTERIM REVIEW UNDER THE AUTHORIZATION OF HOSS FOROUZAN, P.E. (#77748) AND IS **NOT TO BE USED FOR CONSTRUCTION.**

CITY OF HOUSTON
HOUSTON PUBLIC WORKS

LIFT STATION REHABILITATION AND RECONSTRUCTION
BEN'S BRANCH, WOODLAND RIDGE, ELMWOOD HILLS, FOREST SHORES, TRAIL RIVER, RIVERLAWN

ELECTRICAL

RIVERLAWN LIFT STATION ELECTRICAL SERVICE RACK DETAIL

WBS NUMBER	FOR CITY OF HOUSTON USE ONLY
R–000267–0180–3	
DRAWING SCALE	
AS NOTED	
CITY OF HOUSTON PM	
BRENDA JOHNSON P.E.	
SHEET NO. XX OF XX	

RL–E–08

FILE PATH: O:\H8107_Lift Station Rehabilitation And Reconstruction (Pape Dawson)\6 Drawings\Electrical\Working\River Lawn\H8107_RL–E–08.dwg

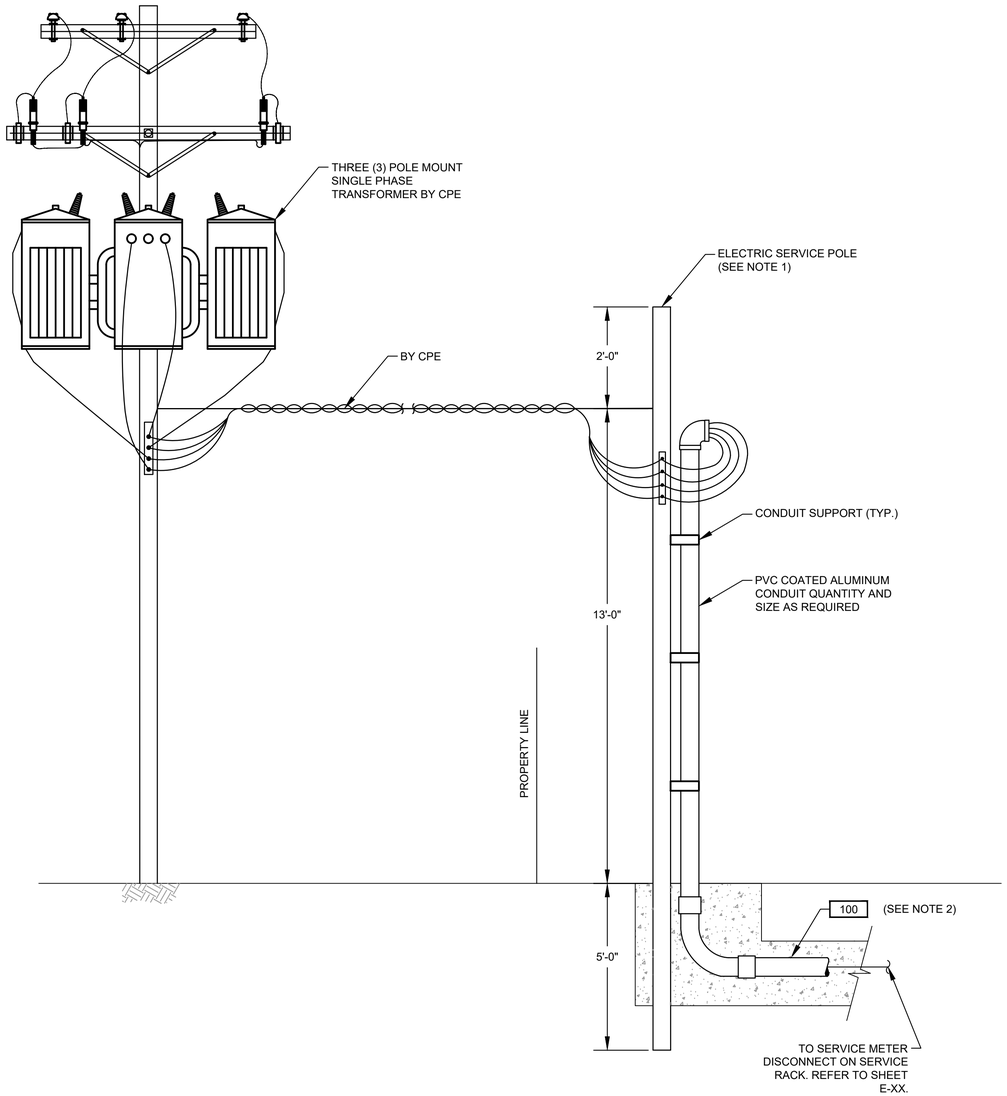

ELECTRICAL SERVICE ENTRANCE

DETAIL 1
NTS. -

NOTES:

1. WOODEN POLE 20' LONG. TOP DIAMETER 6", BOTTOM DIAMETER 8" PROVIDED AND INSTALLED BY ELECTRICAL CONTRACTOR.
2. ELECTRICAL SERVICE FEEDER PROVIDED AND INSTALLED BY ELECTRICAL CONTRACTOR. COORDINATE WITH CPE FOR THE REQUIREMENTS OF THE INSTALLATION.

NO.	DATE	REVISION	APP.

NOTICE:
FOR YOUR SAFETY, YOU ARE REQUIRED BY TEXAS LAW TO CALL 811 AT LEAST 48 HOURS BEFORE YOU DIG SO THAT UNDERGROUND LINES CAN BE MARKED. THIS SIGNATURE DOES NOT FULFILL YOUR OBLIGATION TO CALL 811

VERIFICATION OF PRIVATE UTILITY LINES

Date

CenterPoint Energy natural gas utilities shown. (Gas service lines are not shown). This signature not be used for conflict verification.

Signature valid for six months.

Date

CenterPoint Energy/UNDERGROUND Electrical Facilities Verification ONLY. (This signature verifies existing underground facilities – not to be used for conflict verification)

Signature valid for six months.

Date

Approved for AT&T underground conduit facilities only.
Signature valid for one year.

PAPE-DAWSON
2107 CITYWEST BLVD, 3RD FLR I HOUSTON, TX 77042 I 713.428.2400
TEXAS ENGINEERING FIRM #470 I TEXAS SURVEYING FIRM #10028800

GAI
Gupta & Associates, Inc.
CONSULTING ENGINEERING
Registration No. F-2593
302 Dennis St.
Houston, Texas 77006
Tel: 713-636-2936
Fax: 713-636-2987
email: hforouzan@gaiconsulting.com

SURVEYED BY:
PAPE-DAWSON ENGINEERS
FB NO. 24-018

THIS DOCUMENT IS RELEASED FOR INTERIM REVIEW UNDER THE AUTHORIZATION OF HOSS FOROUZAN, P.E. (#77748) AND IS **NOT TO BE USED FOR CONSTRUCTION.**

CITY OF HOUSTON
HOUSTON PUBLIC WORKS

LIFT STATION REHABILITATION AND RECONSTRUCTION
BEN'S BRANCH, WOODLAND RIDGE, ELMWOOD HILLS, FOREST SHORES, TRAIL RIVER, RIVERLAWN

ELECTRICAL

RIVERLAWN LIFT STATION SERVICE POLE DETAIL

WBS NUMBER	FOR CITY OF HOUSTON USE ONLY
R-000267-0180-3	
DRAWING SCALE	
AS NOTED	
CITY OF HOUSTON PM	
BRENDA JOHNSON P.E.	
SHEET NO. XX OF XX	

RL-E-09

FILE PATH: O:\H8107_Lift Station Rehabilitation And Reconstruction (Pape Dawson)\6 Drawings\Electrical\Working\River Lawn\H8107_RL-E-09.dwg

	DESCRIPTION	SERVICE		ROUTING			CONDUIT & WIRE SIZE
		VOLTAGE	AMPS OR HP	FROM	TO	VIA	
A	MAIN BONDING JUMPER	--	--	MAIN FUSED DISCONNECT NEUTRAL	MAIN FUSED DISCONNECT GROUND	--	#4 CU GND.
B	EQUIPMENT BONDING JUMPER	--	--	MCC/POWER PANEL ENCLOSURE	POWER/CONTROL PANEL & EQUIPMENT	--	#4 CU GND.
C	GROUNDED ELECTRODE CONDUCTOR	--	--	GROUNDING ELECTRODE	MAIN SERVICE FUSED DISCONNECT GROUNDING	--	#4 CU GND.
100	SERVICE ENTRANCE	480V	200A	UTILITY POWER SERVICE	METER DISCONNECT		3 #3/0 AWG., #4 NEUT. #3 GND., 2-1/2" C.
100A	SERVICE POWER	480V	200A	SERVICE DISCONNECT	MANUAL TRANSFER SWTICH	--	3 #3/0 AWG., #4 NEUT. #3 GND., 2-1/2" C.
100B	MCC SERVICE POWER	480V	200A	MANUAL TRANSFER SWITCH	MAIN BREAKER IN MCC	--	3 #3/0 AWG., #4 NEUT. #3 GND., 2-1/2" C.
100C	NORMAL/EMERGENCY POWER STATUS	24VDC	--	MANUAL TRANSFER SWITCH	CONTROL PANEL	CAPPED CONDUITS	4 #14 AWG., 1"C.
100D	EMERGENCY POWER	480V	200A	GENERATOR DISCONNECT	MANUAL TRANSFER SWITCH	--	3 #3/0 AWG., #4 NEUT. #3 GND., 2-1/2" C.
101	GROUND ELECTRODE CONDUCTOR	--	--	MCC ENCLOSURE	GROUND FIELD	--	#2/0 GND.
102	GROUND ELECTRODE CONDUCTOR	--	--	BUILDING STEEL	GROUND FIELD	--	#2/0 GND.
103	BUILDING GROUNDING	--	--	BUILDING REBAR	LIGHTNING GROUND ROD	--	#2/0 GND.
104	GROUND ELECTRODE CONDUCTOR	--	--	CONTROL PANEL	GROUND FIELD	--	#2/0 GND.
105	COMMUNICATION	--	--	COMMUNICATION POLE	CONTROL PANEL	--	1-1/2"C. CAT 5E
105A	COMMUNICATION POLE LIGHT	120V	--	COMMUNICATION POLE	LIGHTING PANEL	--	2#12, #12G, 1"C.
200	PUMP NO. 1 POWER	480V	25 HP	PUMP NO. 1	PUMP NO. 1 JUNCTION BOX	--	MANUFACTURER CABLE IN 2-1/2"C.
201	PUMP NO. 1 CONTROLS	120V	--	PUMP NO. 1	PUMP NO. 1 JUNCTION BOX	--	MANUFACTURER CABLE IN 2-1/2"C.
202	PUMP NO. 1 POWER	480V	25 HP	PUMP NO. 1 JUNCTION BOX	PUMP STARTER	--	3#6 AWG., #8 GND., 1-1/2"C.
203	COMBINED PUMP CONTROLS	120V	--	PUMP NO. 1 JUNCTION BOX	PUMP STARTER	COMBINE PUMP 1 & 2 CONTROLS	COMBINE 200 & 300 TAG WIRING, 8#14, 1"C.
300	PUMP NO. 2 POWER	480V	25 HP	PUMP NO. 2	PUMP NO. 2 JUNCTION BOX	--	MANUFACTURER CABLE IN 2-1/2"C.
301	PUMP NO. 2 CONTROLS	120V	--	PUMP NO. 2	PUMP NO. 2 JUNCTION BOX	--	MANUFACTURER CABLE IN 2-1/2"C.
302	PUMP NO. 2 POWER	480V	25 HP	PUMP NO. 2 JUNCTION BOX	PUMP STARTER	--	3#6 AWG., #8 GND., 1-1/2"C.
600	LIGHTING PANEL FEEDER	480V	40A	MOTOR CONTROL CENTER	LIGHTING TRANSFORMER	--	2#6, #6 GND., 1"C.
601	LIGHTING PANEL GROUND	--	--	LIGHTING PANEL	GROUND FIELD	--	#8 GND., 1"C.
602	LIGHTING PANEL FEEDER	120/240V	--	LIGHTING TRANSFORMER	LIGHTING PANEL	--	3#4, #6 GND., 1-1/4" C.
900	INTRUSION ALARM	24VDC	--	MOTION SWITCH	CONTROL PANEL	--	2#14, 3/4" C.
1000	LEVEL TRANSMITTER	24VDC	--	TRANSMITTER JUNCTION BOX	TRANSMITTER JUNCTION BOX	--	MANUFACTURER'S CABLE IN 2-1/2"C
1001	LEVEL TRANSMITTER	24VDC	--	TRANSMITTER JUNCTION BOX	TRANSMITTER JUNCTION BOX	--	MANUFACTURER'S CABLE IN 2-1/2"C
1002	COMBINED LEVEL TRANSMITTERS & FLOAT SWITCH	24VDC	--	CONTROL PANEL	TRANSMITTER JUNCTION BOX	--	2-TRI, 4#14, 2" C.
1003	WELL FLOAT SWITCHES	24VDC	--	TRANSMITTER JUNCTION BOX	FLOAT SWITCH NO.1 & NO.2	--	MANUFACTURER'S CABLE IN 2-1/2"C
1100	120VAC FOR RECEPTACLE	-	--	LIGHTING PANEL	RECEPTACLE NEXT TO TRANSMITTER J-BOX	--	2#12, #12G, 1" C.
1200	120VAC FOR RECEPTACLE	-	--	LIGHTING PANEL	RECEPTACLE NEXT TO PUMP NO.2 J-BOX	--	2#12, #12G, 1" C.
1300	SITE LIGHTING	120VAC	--	LIGHTING PANEL	SITE LIGHTS	--	2#12, #12G, 1" C.
1400	ODOR CONTROL SIGNAL	24VDC	--	CONTROL PANEL	ODOR CONTROL PANEL	--	8#14, #14 GND., 1" C.
1401	ODOR CONTROL BLOWER	480VAC	3 HP	ODOR CONTROL PANEL	ODOR CONTROL BLOWER	--	3#12, #12G, 1" C.
1500	CHEMICAL INJECTION PUMP	120VAC	--	LIGHTING PANEL	CHEMICAL INJECTION PUMP	--	2#12, #12G, 1" C.
1501	LEVEL TRANSMITTER FOR CHEMICAL TANK	24VDC	--	CONTROL PANEL	LEVEL TRANSMITTER "LT-3" ON CHEMICAL TANK	--	1-TRI, 1" C.

NO.	DATE	REVISION	APP.

NOTICE:
FOR YOUR SAFETY, YOU ARE REQUIRED BY TEXAS LAW TO CALL 811 AT LEAST 48 HOURS BEFORE YOU DIG SO THAT UNDERGROUND LINES CAN BE MARKED. THIS SIGNATURE DOES NOT FULFILL YOUR OBLIGATION TO CALL 811

VERIFICATION OF PRIVATE UTILITY LINES

Date

CenterPoint Energy natural gas utilities shown. (Gas service lines are not shown). This signature not be used for conflict verification.

Signature valid for six months.

Date

CenterPoint Energy/UNDERGROUND Electrical Facilities Verification ONLY. (This signature verifies existing underground facilities – not to be used for conflict verification)

Signature valid for six months.

Date

Approved for AT&T underground conduit facilities only.
Signature valid for one year.

PAPE–DAWSON
2107 CITYWEST BLVD, 3RD FLR I HOUSTON, TX 77042 I 713.428.2400
TEXAS ENGINEERING FIRM #470 I TEXAS SURVEYING FIRM #10028800

GAI
Gupta & Associates, Inc.
CONSULTING ENGINEERING
Registration No. F-2593
302 Dennis St.
Houston, Texas 77006
Tel: 713-636-2936
Fax: 713-636-2987
email: hforouzan@guiconsulting.com

SURVEYED BY:
PAPE–DAWSON ENGINEERS
FB NO. 24–018

THIS DOCUMENT IS RELEASED FOR INTERIM REVIEW UNDER THE AUTHORIZATION OF HOSS FOROUZAN, P.E. (#77748) AND IS **NOT TO BE USED FOR CONSTRUCTION.**

CITY OF HOUSTON
HOUSTON PUBLIC WORKS

LIFT STATION REHABILITATION AND RECONSTRUCTION
BEN'S BRANCH, WOODLAND RIDGE, ELMWOOD HILLS, FOREST SHORES, TRAIL RIVER, RIVERLAWN

ELECTRICAL

RIVERLAWN LIFT STATION CONDUIT SCHEDULE

WBS NUMBER	FOR CITY OF HOUSTON USE ONLY
R–000267–0180–3	
DRAWING SCALE	
AS NOTED	
CITY OF HOUSTON PM	
BRENDA JOHNSON P.E.	
SHEET NO. XX OF XX	

RL–E–10

FILE PATH: O:\H8107_Lift Station Rehabilitation And Reconstruction (Pape Dawson)\6 Drawings\Electrical\Working\River Lawn\H8107_RL–E–10.dwg

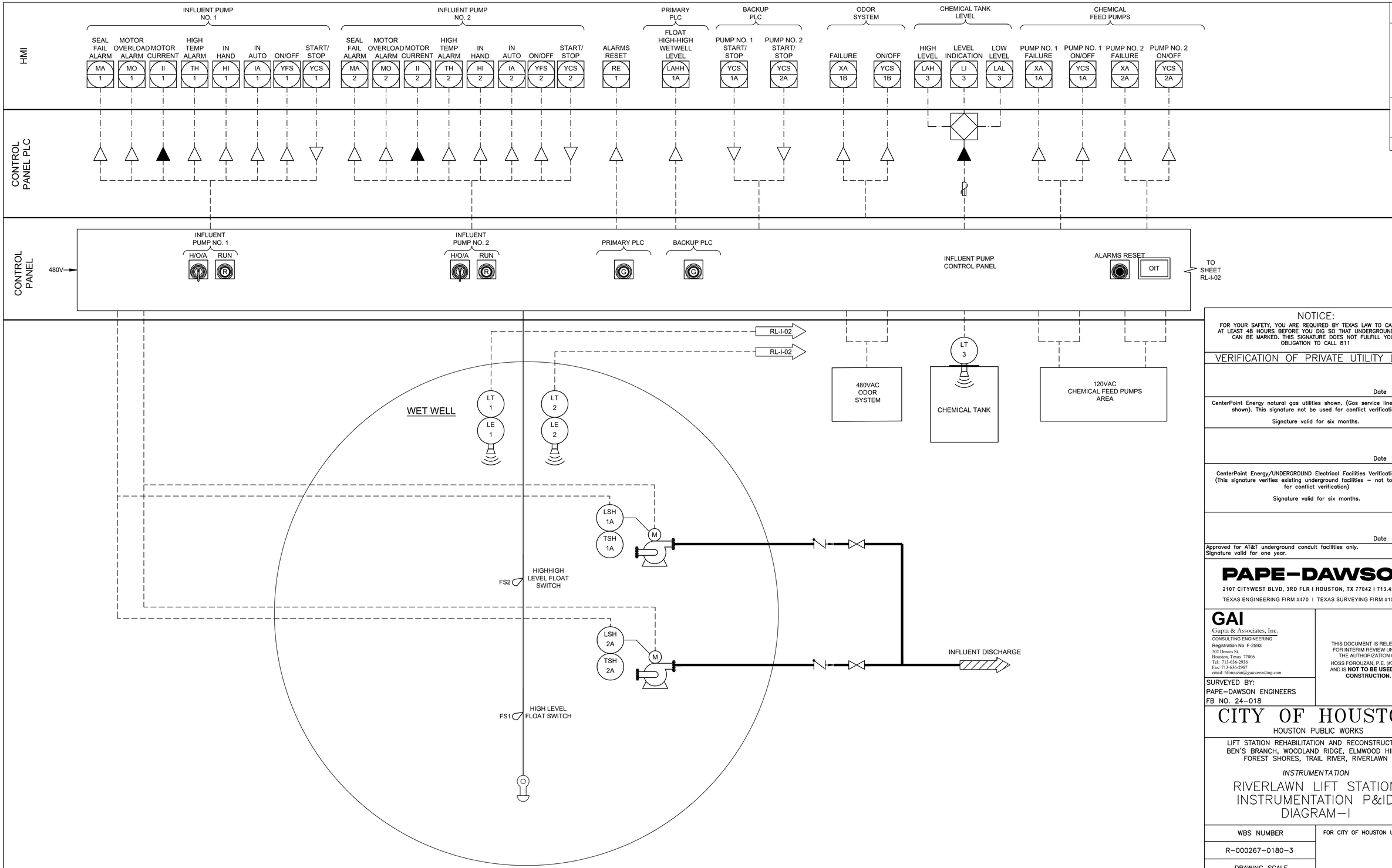

FILE PATH: O:\H8107_Lift Station Rehabilitation And Reconstruction (Pape Dawson)\6 Drawings\Instrumentation And Control\Working\River Lawn\H8107_RL-I-01.dwg

NOTICE:
FOR YOUR SAFETY, YOU ARE REQUIRED BY TEXAS LAW TO CALL 811 AT LEAST 48 HOURS BEFORE YOU DIG SO THAT UNDERGROUND LINES CAN BE MARKED. THIS SIGNATURE DOES NOT FULFILL YOUR OBLIGATION TO CALL 811

VERIFICATION OF PRIVATE UTILITY LINES

Date

CenterPoint Energy natural gas utilities shown. (Gas service lines are not shown). This signature not be used for conflict verification.

Signature valid for six months.

Date

CenterPoint Energy/UNDERGROUND Electrical Facilities Verification ONLY. (This signature verifies existing underground facilities – not to be used for conflict verification)

Signature valid for six months.

Date

Approved for AT&T underground conduit facilities only.
Signature valid for one year.

PAPE–DAWSON
2107 CITYWEST BLVD, 3RD FLR I HOUSTON, TX 77042 I 713.428.2400
TEXAS ENGINEERING FIRM #470 I TEXAS SURVEYING FIRM #10028800

GAI
Gupta & Associates, Inc.
CONSULTING ENGINEERING
Registration No. F-2593
302 Dennis St.
Houston, Texas 77006
Tel: 713-636-2936
Fax: 713-636-2987
email: hforouzan@guiconsulting.com

SURVEYED BY:
PAPE–DAWSON ENGINEERS
FB NO. 24–018

THIS DOCUMENT IS RELEASED FOR INTERIM REVIEW UNDER THE AUTHORIZATION OF HOSS FOROUZAN, P.E. (#77748) AND IS **NOT TO BE USED FOR CONSTRUCTION.**

CITY OF HOUSTON
HOUSTON PUBLIC WORKS

LIFT STATION REHABILITATION AND RECONSTRUCTION
BEN'S BRANCH, WOODLAND RIDGE, ELMWOOD HILLS, FOREST SHORES, TRAIL RIVER, RIVERLAWN

INSTRUMENTATION

RIVERLAWN LIFT STATION INSTRUMENTATION P&ID DIAGRAM–I

WBS NUMBER	FOR CITY OF HOUSTON USE ONLY
R–000267–0180–3	
DRAWING SCALE	
AS NOTED	
CITY OF HOUSTON PM	
BRENDA JOHNSON P.E.	
SHEET NO. XX OF XX	

RL–I–01

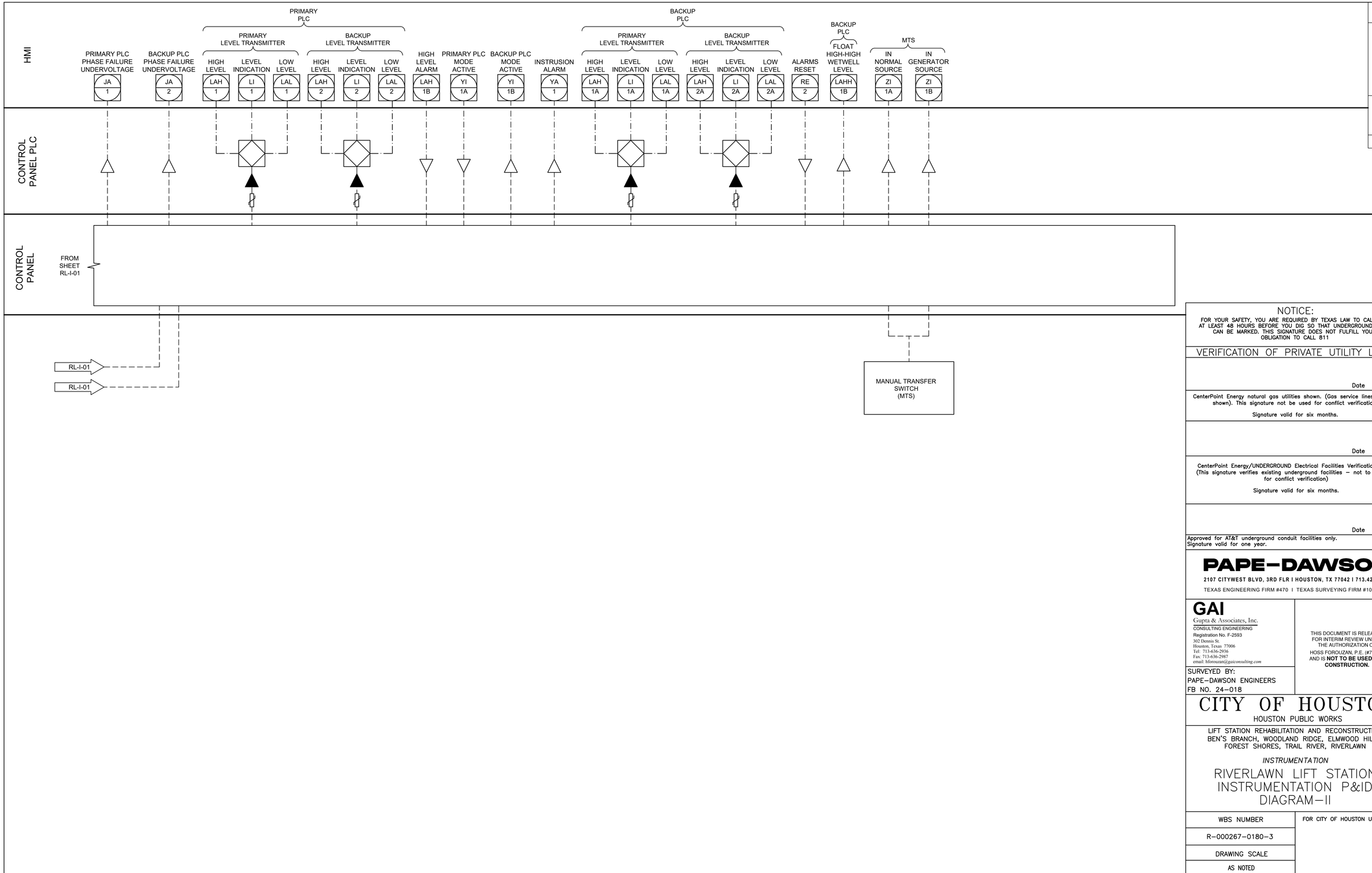

NO.	DATE	REVISION	APP.

NOTICE:
FOR YOUR SAFETY, YOU ARE REQUIRED BY TEXAS LAW TO CALL 811 AT LEAST 48 HOURS BEFORE YOU DIG SO THAT UNDERGROUND LINES CAN BE MARKED. THIS SIGNATURE DOES NOT FULFILL YOUR OBLIGATION TO CALL 811

VERIFICATION OF PRIVATE UTILITY LINES

Date

CenterPoint Energy natural gas utilities shown. (Gas service lines are not shown). This signature not be used for conflict verification.

Signature valid for six months.

Date

CenterPoint Energy/UNDERGROUND Electrical Facilities Verification ONLY. (This signature verifies existing underground facilities – not to be used for conflict verification)

Signature valid for six months.

Date

Approved for AT&T underground conduit facilities only.
Signature valid for one year.

PAPE–DAWSON
2107 CITYWEST BLVD, 3RD FLR I HOUSTON, TX 77042 I 713.428.2400
TEXAS ENGINEERING FIRM #470 I TEXAS SURVEYING FIRM #10028800

GAI
Gupta & Associates, Inc.
CONSULTING ENGINEERING
Registration No. F-2593
302 Dennis St.
Houston, Texas 77006
Tel: 713-636-2936
Fax: 713-636-2987
email: hforouzan@guiconsulting.com

SURVEYED BY:
PAPE–DAWSON ENGINEERS
FB NO. 24–018

THIS DOCUMENT IS RELEASED FOR INTERIM REVIEW UNDER THE AUTHORIZATION OF HOSS FOROUZAN, P.E. (#77748) AND IS **NOT TO BE USED FOR CONSTRUCTION.**

CITY OF HOUSTON
HOUSTON PUBLIC WORKS

LIFT STATION REHABILITATION AND RECONSTRUCTION
BEN'S BRANCH, WOODLAND RIDGE, ELMWOOD HILLS, FOREST SHORES, TRAIL RIVER, RIVERLAWN

INSTRUMENTATION

RIVERLAWN LIFT STATION INSTRUMENTATION P&ID DIAGRAM – II

WBS NUMBER	FOR CITY OF HOUSTON USE ONLY
R–000267–0180–3	
DRAWING SCALE	
AS NOTED	
CITY OF HOUSTON PM	
BRENDA JOHNSON P.E.	
SHEET NO. XX OF XX	

RL–I–02

FILE PATH: O:\H8107_Lift Station Rehabilitation And Reconstruction (Pape Dawson)\6 Drawings\Instrumentation And Control\Working\River Lawn\H8107_RL–I–02.dwg

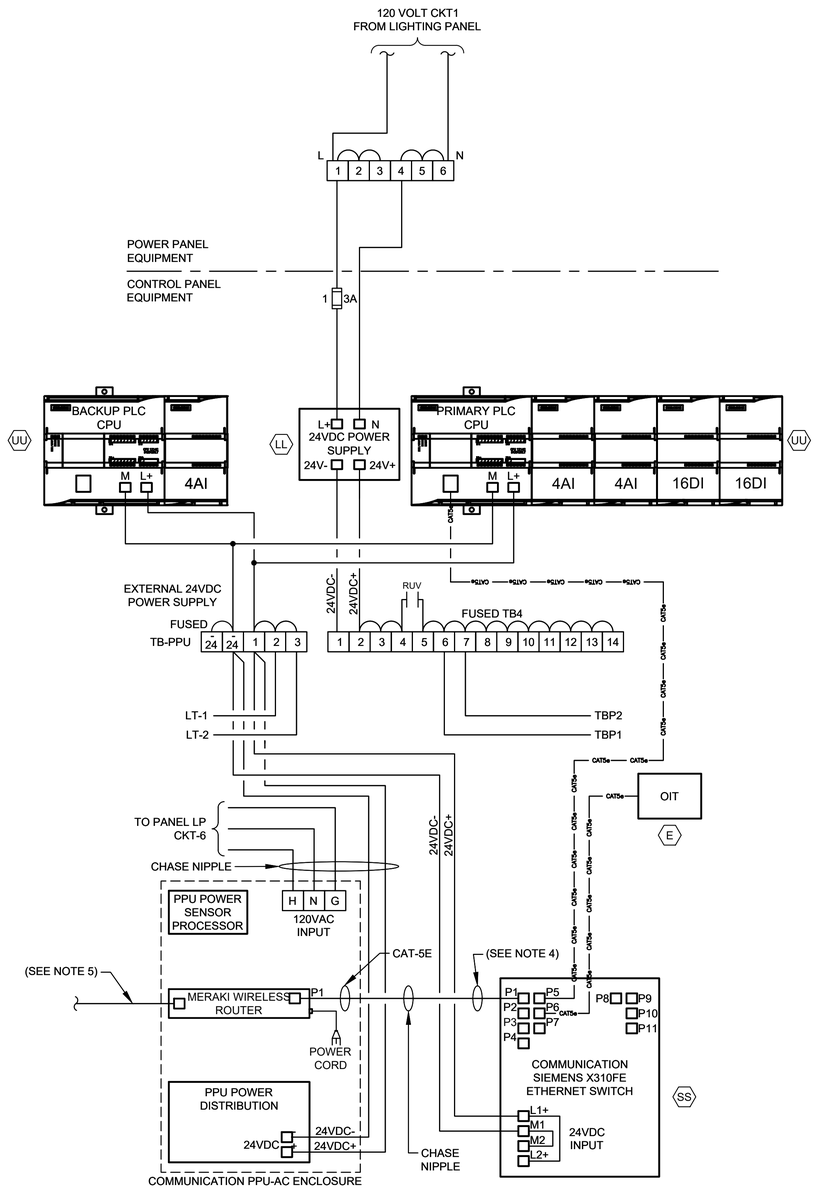

CONTROL POWER &
COMMUNICATIONS WIRING

DIAGRAM

NTS

(SEE NOTE 2 & 6)

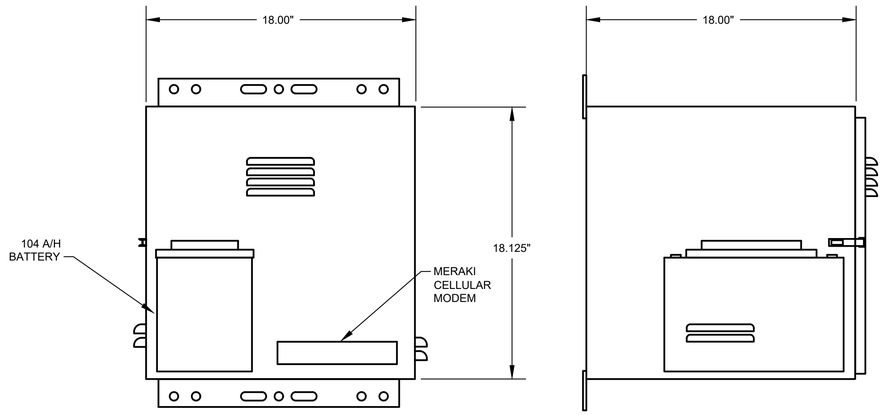

PPU-AC ENCLOSURE
FRONT VIEW

PPU-AC ENCLOSURE
SIDE VIEW

PPU-AC
CONTROL ENCLOSURE

ELEVATION

NTS

(SEE NOTE 7)

NOTES:

1. FOR DESCRIPTION AND RATINGS OF ITEMS INDICATED WITH ITEM TAG, SEE DEVICE RATINGS SCHEDULE.
2. REFER TO SPEC SECTION 16120 FOR CONDUCTOR COLOR CODE.
3. THE PLC POWER SUPPLY SHALL FEED THE 24VDC I/O.
4. ETHERNET CABLE FOR MERAKI CELLULAR ROUTER (P1).
5. POE CABLE TO RADIO.
6. COMMUNICATION PPU-AC & SCADA SHALL BE PROVIDED BY CONTRACTOR INCLUDING TO RUN CONDUITS & WIRES.
7. COORDINATE WITH VENDOR TO PROVIDE PROPER VENTILATION WHERE APPLICABLE.

NO.	DATE	REVISION	APP.

NOTICE:
FOR YOUR SAFETY, YOU ARE REQUIRED BY TEXAS LAW TO CALL 811 AT LEAST 48 HOURS BEFORE YOU DIG SO THAT UNDERGROUND LINES CAN BE MARKED. THIS SIGNATURE DOES NOT FULFILL YOUR OBLIGATION TO CALL 811

VERIFICATION OF PRIVATE UTILITY LINES

Date

CenterPoint Energy natural gas utilities shown. (Gas service lines are not shown). This signature not be used for conflict verification.

Signature valid for six months.

Date

CenterPoint Energy/UNDERGROUND Electrical Facilities Verification ONLY. (This signature verifies existing underground facilities – not to be used for conflict verification)

Signature valid for six months.

Date

Approved for AT&T underground conduit facilities only.
Signature valid for one year.

PAPE–DAWSON

2107 CITYWEST BLVD, 3RD FLR I HOUSTON, TX 77042 I 713.428.2400

TEXAS ENGINEERING FIRM #470 I TEXAS SURVEYING FIRM #10028800

GAI
Gupta & Associates, Inc.
CONSULTING ENGINEERING
Registration No. F-2593
302 Dennis St.
Houston, Texas 77006
Tel: 713-636-2936
Fax: 713-636-2987
email: hforouzan@guiconsulting.com

THIS DOCUMENT IS RELEASED FOR INTERIM REVIEW UNDER THE AUTHORIZATION OF HOSS FOROUZAN, P.E. (#77748) AND IS **NOT TO BE USED FOR CONSTRUCTION.**

SURVEYED BY:
PAPE–DAWSON ENGINEERS
FB NO. 24–018

CITY OF HOUSTON
HOUSTON PUBLIC WORKS

LIFT STATION REHABILITATION AND RECONSTRUCTION
BEN'S BRANCH, WOODLAND RIDGE, ELMWOOD HILLS, FOREST SHORES, TRAIL RIVER, RIVERLAWN

INSTRUMENTATION

RIVERLAWN LIFT STATION COMMUNICATIONS DIAGRAM

WBS NUMBER	FOR CITY OF HOUSTON USE ONLY
R–000267–0180–3	
DRAWING SCALE	
AS NOTED	
CITY OF HOUSTON PM	
BRENDA JOHNSON P.E.	
SHEET NO. XX OF XX	

RL–I–03

FILE PATH: O:\H8107_Lift Station Rehabilitation And Reconstruction (Pape Dawson)\6 Drawings\Instrumentation And Control\Working\River Lawn\H8107_RL–I–03.dwg

EQUIPMENT AND DEVICE SCHEDULE

ITEM	QUANTITY	DESCRIPTION
A	1	PANEL BOARD, 120/240V, 1 PHASE, 3 WIRE, 100A, 12 CKTS
B	2	FULL VOLTAGE, NON-REVERSING, SINGLE SPEED, AUTOMATIC MOTOR STARTER W/120 VOLT CONTROL COIL, NEMA SIZE AS SCHEDULED.
C	2	TIME DELAY RELAY WITH THREE FORM C CONTACTS, 120VAC COIL AND 11 PIN SOCKET BASE.
D	1	SINGLE CHANNEL INTRINSICALLY SAFE RELAY
E	1	PROGRAMMING SCREEN (OIT)
F	2	HAND-OFF-AUTO SWITCH, 3 POSITION, HEAVY-DUTY, OILTIGHT WITH 2 SETS OF CONTACT BLOCKS (PUMP CONTROL)
G	2	INDICATING LIGHT, HEAVY DUTY, OILTIGHT, RED, 24 VDC, LED, WITH "RUN" LEGEND
H	1	PERPETUAL POWER UNIT (PPU)
I	1	PUMP ALARM RESET PUSHBUTTON
J	2	SWITCH FOR CABINET LIGHT, 120V, 20A, SPST
K	3	DUPLEX RECEPTACLE, 120V, 20A, 2 WIRE, GROUNDED
L	2	24" LED STRIP LIGHT 120V SUITABLE FOR ZERO DEGREE OPERATION.
M	1	SURGE PROTECTOR - INCOMING POWER
N	*	NOT USED.
P	2	CURRENT TRANSFORMER, RATIO AS SCHEDULED W/4-20mA OUTPUT.
Q	12	TERMINAL BLOCKS, SIZED FOR MOTOR POWER REQUIREMENTS
R	*	RELAY WITH THREE FORM C CONTACTS, AND 11 PIN SOCKET BASE
S	*	NOT USED.
T	*	NAMEPLATES, SEE SPECIFICATIONS (SEE NAMEPLATE SCHEDULE)
U	2	SOLID STATE MOTOR OVERLOAD RELAY
V	6	FUSE HOLDER & FUSES - PHASE FAILURE
W	1	NEMA 3R GASKETED ALUMINUM ENCLOSURE WITHOUT VENTS 72"H x 48"W x 36"D
X	1	DOOR MOUNTED ROTARY HANDLE DISCONNECT SWITCH (SUITABLE FOR ENVIRONMENT)
Y	1	THERMAL-MAGNETIC MOLDED CASE MAIN CIRCUIT BREAKER, SIZE AS SCHEDULED
Z	2	ADJUSTABLE INSTANTENOUS TRIP MOTOR CIRCUIT PROTECTOR, SIZE AS SCHEDULED
AA	*	TERMINAL BLOCKS
BB	2	EXTERNAL OVERLOAD RESET PUSHBUTTON MECHANISM
CC	3	ANALOG I/O SURGE SUPPRESSOR
DD	1	WIRE DUCT 2" WIDE x 2" DEEP MINIMUM
EE	1	THERMAL-MAGNETIC MODLED CASE CIRCUIT BREAKER FOR LIGHTING TRANSFORMER, SIZE AS SCHEDULED
FF	1	GROUND BUS
GG	1	25 KVA, 480 - 240/120V,1ϕ, 3W DRY TYPE NEMA 3R ENCLOSURE TRANSFORMER (PAD MOUNTED)
HH	*	NOT USED.
II	1	120VAC - 24VAC POWER SUPPLY (AS REQUIRED)
JJ	11	CARTRIDGE FUSES & FUSE HOLDER
KK	8	QUARTER TURN CAPTIVE DOOR CLOSURE
LL	1	120VAC - 24VDC PLC POWER SUPPLY 5A
MM	2	MOTION SWITCH
NN	*	NOT USED
PP	2	INDICATING LED LIGHT, HEAVY DUTY, OILTIGHT, GREEN, 24 VDC, LED WITH " PRIMARY PLC" & "BACKUP PLC" LEGEND
QQ	*	NOT USED
RR	*	NOT USED
SS	1	COMMUNICATION ETHERNET SWITCH
TT	1	POWER SURGE PROTECTOR - CONTROL POWER
UU	2	PROGRAMMABLE LOGIC CONTROLLER WITH EXPANSION UNIT
VV	1	PHASE AND UNDER VOLTAGE MONITOR
WW	*	FUSED TERMINAL BLOCKS
XX	2	PUMP PROTECTION MODULE RATED FOR CLASS I, DIVISION I
YY	2	ANALOG SIGNAL ISOLATOR
ZZ	-	NOT USED
AB	-	NOT USED.
AC	1	POWER DISTRIBUTION BLOCK
AD	1	NEUTRAL LUG
AE	1	6" EXHAUST FAN, 120V, STAINLESS FILTERS & GRILL PACKAGE W/BUG GUARD
AF	1	T-STAT FOR EXHAUST FAN

* - AS SCHEDULED

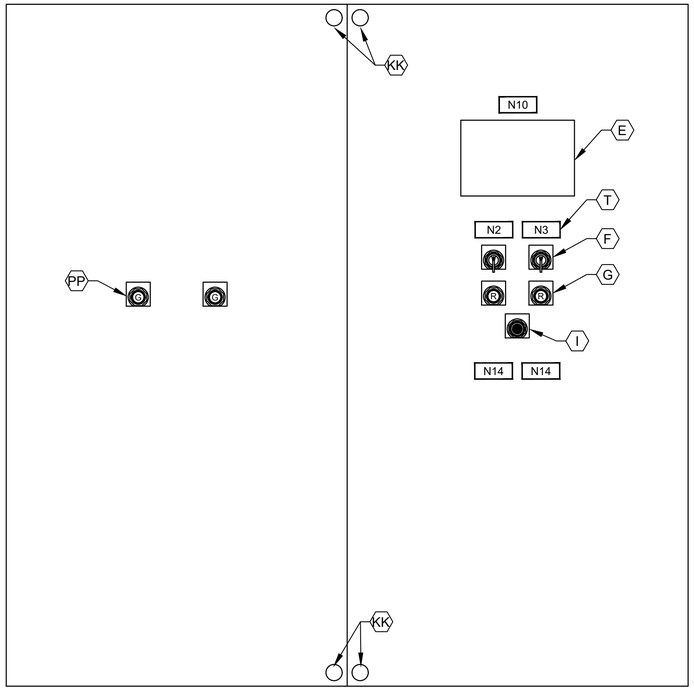

CONTROL PANEL FRONT INNER DOOR

ELEVATION

NTS

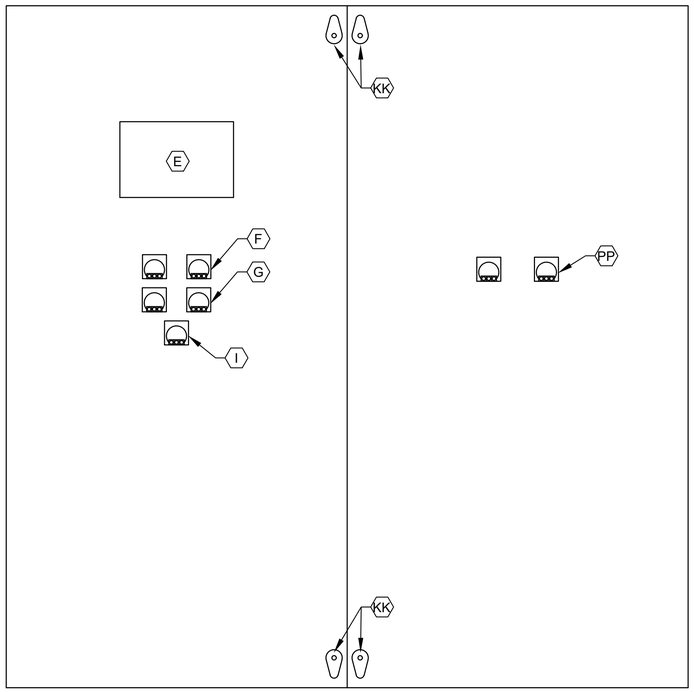

CONTROL PANEL BACK INNER DOOR

ELEVATION

NTS

NOTES:

1. NAMEPLATES SHALL BE MOUNTED TO PANELS USING STAINLESS STEEL HARDWARE.
2. REFER SPECIFICATIONS FOR ALL PANEL COMPONENTS.

NO.	DATE	REVISION	APP.

NOTICE:
FOR YOUR SAFETY, YOU ARE REQUIRED BY TEXAS LAW TO CALL 811 AT LEAST 48 HOURS BEFORE YOU DIG SO THAT UNDERGROUND LINES CAN BE MARKED. THIS SIGNATURE DOES NOT FULFILL YOUR OBLIGATION TO CALL 811

VERIFICATION OF PRIVATE UTILITY LINES

Date

CenterPoint Energy natural gas utilities shown. (Gas service lines are not shown). This signature not be used for conflict verification.

Signature valid for six months.

Date

CenterPoint Energy/UNDERGROUND Electrical Facilities Verification ONLY. (This signature verifies existing underground facilities – not to be used for conflict verification)

Signature valid for six months.

Date

Approved for AT&T underground conduit facilities only.
Signature valid for one year.

PAPE–DAWSON
2107 CITYWEST BLVD, 3RD FLR I HOUSTON, TX 77042 I 713.428.2400
TEXAS ENGINEERING FIRM #470 I TEXAS SURVEYING FIRM #10028800

GAI
Gupta & Associates, Inc.
CONSULTING ENGINEERING
Registration No. F-2593
302 Dennis St.
Houston, Texas 77006
Tel: 713-636-2936
Fax: 713-636-2987
email: hforouzan@gaiconsulting.com

SURVEYED BY:
PAPE–DAWSON ENGINEERS
FB NO. 24–018

THIS DOCUMENT IS RELEASED FOR INTERIM REVIEW UNDER THE AUTHORIZATION OF HOSS FOROUZAN, P.E. (#77748) AND IS **NOT TO BE USED FOR CONSTRUCTION.**

CITY OF HOUSTON
HOUSTON PUBLIC WORKS

LIFT STATION REHABILITATION AND RECONSTRUCTION
BEN'S BRANCH, WOODLAND RIDGE, ELMWOOD HILLS, FOREST SHORES, TRAIL RIVER, RIVERLAWN

INSTRUMENTATION

RIVERLAWN LIFT STATION CONTROL CABINET EQUIPMENT LAYOUT & SCHEDULE

WBS NUMBER	FOR CITY OF HOUSTON USE ONLY
R–000267–0180–3	
DRAWING SCALE	
AS NOTED	
CITY OF HOUSTON PM	
BRENDA JOHNSON P.E.	
SHEET NO. XX OF XX	

RL–I–04

FILE PATH: O:\H8107_Lift Station Rehabilitation And Reconstruction (Pape Dawson)\6 Drawings\Instrumentation And Control\Working\River Lawn\H8107_RL–I–04.dwg

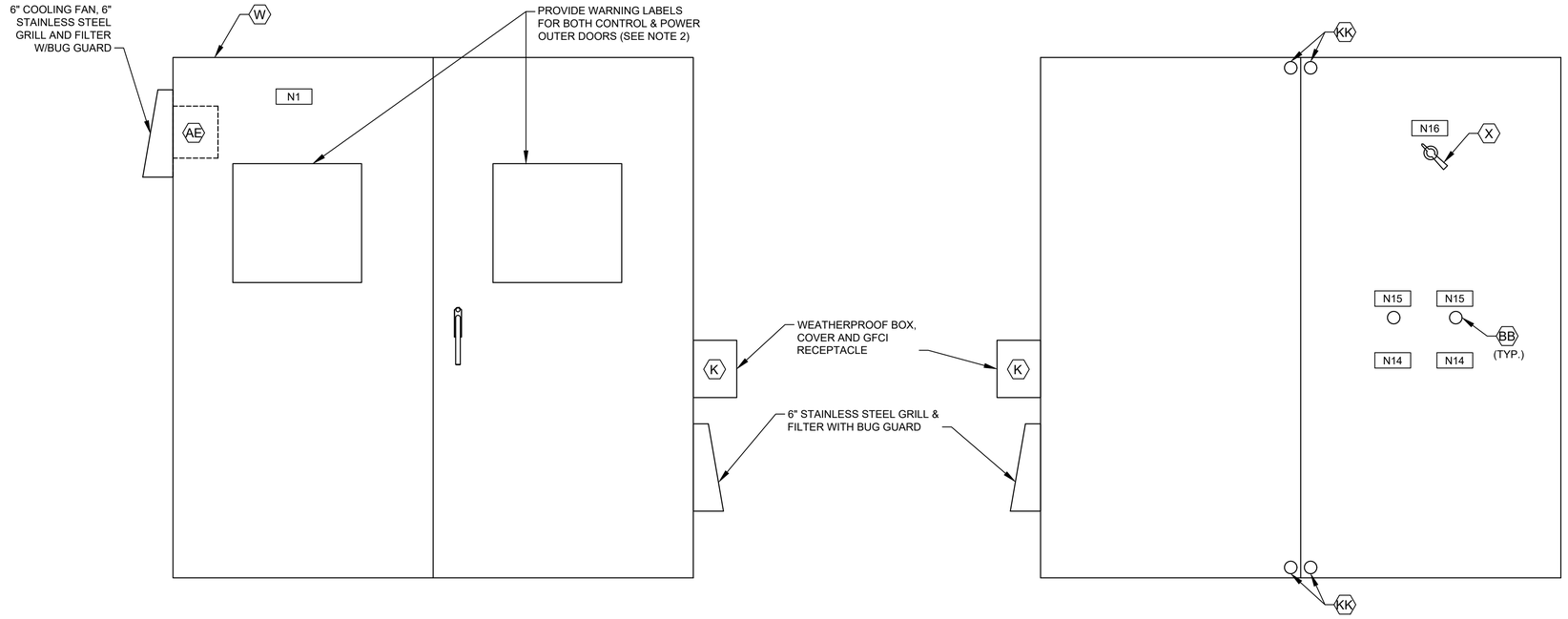

CONTROL CABINET (CONTROL SIDE)
OUTER DOOR

ELEVATION

NTS

CONTROL CABINET (POWER SIDE)
INNER DOOR

ELEVATION

NTS
(SEE NOTE 1)

NOTES:

1. SEE SHEET RL-I-04 FOR EQUIPMENT SCHEDULE.
2. REFER TO NEC SECTIONS 110.16 & 110.21

NAMEPLATE SCHEDULE

DESIGNATION	ENGRAVED	DESIGNATION	ENGRAVED
N1	PUMP STATION DESIGNATION	N8	NOT USED.
N2	PUMP NO. 1	N9	NOT USED.
N3	PUMP NO. 2	N10	PROGRAMMING SCREEN
N4	NOT USED.	N11	NOT USED.
N5	NOT USED.	N12	PRIMARY PLC
N6	NOT USED.	N13	BACKUP PLC
N7	NOT USED.	N14	MOTOR DATA
			HORSEPOWER (OUTPUT) ----------
			RPM AT FULL LOAD ----------
			TIME RATING ----------
			FREQUENCY ----------
			NUMBER OF PHASES ----------
			MODEL NUMBER ----------
			RATED VOLTAGE ----------
			SERVICE FACTOR ----------
			FULL LOAD AMPS ----------
			INSULATION CLAS ----------
			NEMA DESIGN LETTER ----------
			TEMPERATURE RISE ----------
			NEMA FRAME SIZE ----------
			DATE OF MANUFACTURE ----------
			THERMO PROTECTION (IF REQUIRED) -
			MOISTURE PROTECTION (IF REQUIRED)-
		N15	EXTERNAL OVERLOAD RESET PUSH BUTTON MECHANISM
		N16	MAIN BREAKER

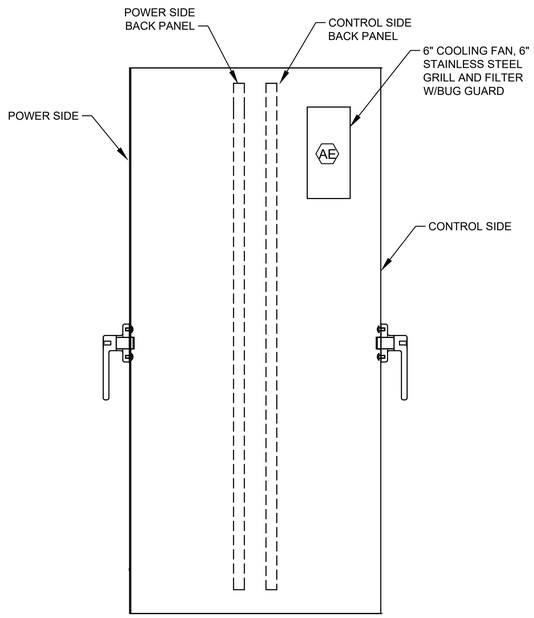

CONTROL CABINET (LEFT SIDE VIEW)

ELEVATION

NTS

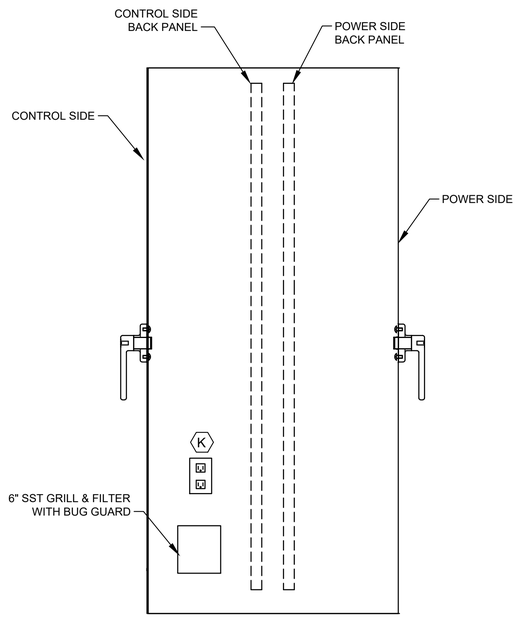

CONTROL CABINET (RIGHT SIDE VIEW)

ELEVATION

NTS

NO.	DATE	REVISION	APP.

NOTICE:
FOR YOUR SAFETY, YOU ARE REQUIRED BY TEXAS LAW TO CALL 811 AT LEAST 48 HOURS BEFORE YOU DIG SO THAT UNDERGROUND LINES CAN BE MARKED. THIS SIGNATURE DOES NOT FULFILL YOUR OBLIGATION TO CALL 811

VERIFICATION OF PRIVATE UTILITY LINES

Date

CenterPoint Energy natural gas utilities shown. (Gas service lines are not shown). This signature not be used for conflict verification.

Signature valid for six months.

Date

CenterPoint Energy/UNDERGROUND Electrical Facilities Verification ONLY. (This signature verifies existing underground facilities – not to be used for conflict verification)

Signature valid for six months.

Date

Approved for AT&T underground conduit facilities only.
Signature valid for one year.

PAPE–DAWSON
2107 CITYWEST BLVD, 3RD FLR I HOUSTON, TX 77042 I 713.428.2400
TEXAS ENGINEERING FIRM #470 I TEXAS SURVEYING FIRM #10028800

GAI
Gupta & Associates, Inc.
CONSULTING ENGINEERING
Registration No. F-2593
302 Dennis St.
Houston, Texas 77006
Tel: 713-636-2936
Fax: 713-636-2987
email: hforouzan@gaiconsulting.com

THIS DOCUMENT IS RELEASED FOR INTERIM REVIEW UNDER THE AUTHORIZATION OF HOSS FOROUZAN, P.E. (#77748) AND IS **NOT TO BE USED FOR CONSTRUCTION.**

SURVEYED BY:
PAPE–DAWSON ENGINEERS
FB NO. 24–018

CITY OF HOUSTON
HOUSTON PUBLIC WORKS

LIFT STATION REHABILITATION AND RECONSTRUCTION
BEN'S BRANCH, WOODLAND RIDGE, ELMWOOD HILLS, FOREST SHORES, TRAIL RIVER, RIVERLAWN

INSTRUMENTATION

RIVERLAWN LIFT STATION CONTROL CABINET EQUIPMENT LAYOUT–I

WBS NUMBER	FOR CITY OF HOUSTON USE ONLY
R–000267–0180–3	
DRAWING SCALE	
AS NOTED	
CITY OF HOUSTON PM	
BRENDA JOHNSON P.E.	
SHEET NO. XX OF XX	

RL–I–05

FILE PATH: O:\H8107_Lift Station Rehabilitation And Reconstruction (Pape Dawson)\6 Drawings\Instrumentation And Control\Working\River Lawn\H8107_RL–I–05.dwg

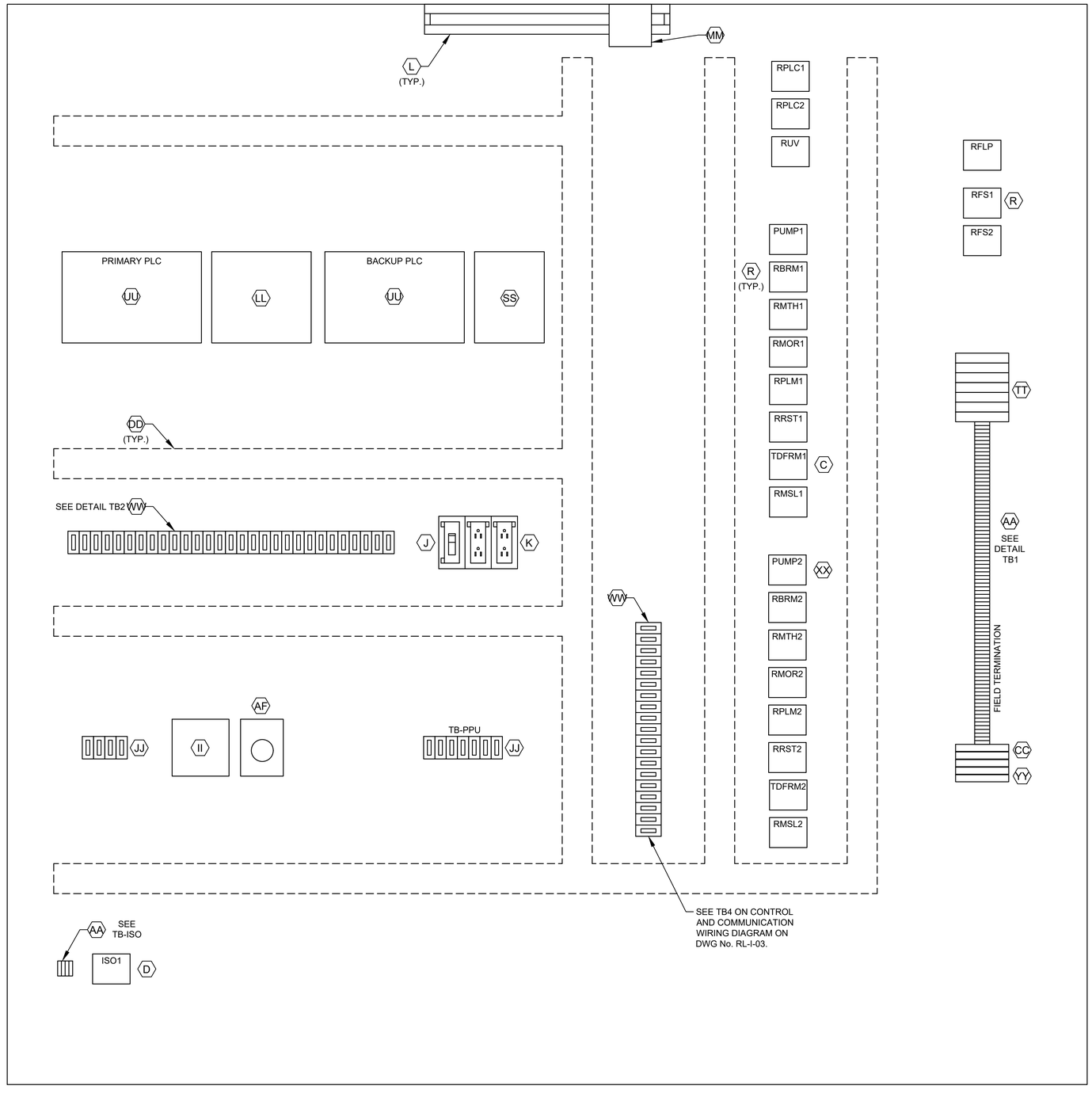

CONTROL PANEL
ELEVATION

L1A
L1N
SPARE
3
3N
49
50
51
52
53
54
1004
1
24V-
24V-
1002
2
11
1001
1001A
12
1003
1003A
1002
1004
18
3N
19
20
36
36N
41
42
43
44
SPARE
L1A
L1N
103
104
105
106
107
108
110
113
115
116
119
SPARE
203
204
205
206
207
208
210
213
215
216
219

DETAIL TB1

ALL L AND N FOR EACH PUMP CONTROL TO BE FUSED

36A
37A
50
52
54
52A
54A
L+
M
35B
38B
41B
47B
13B
13AB
13GB
L+
M
14B
14AB
14GB
L+
M
13
13A
13G
14
14A
14G
SPARE
18
SPARE
28
29
32
35B
33
42
44
SPARE
103
104
115
109
110
118
120
121
122
123
SPARE
209
210
211
218
220
222
223

DETAIL TB2

1500
1501
1503
1504

DETAIL TB-ISO

LEGEND	
TAG	DESCRIPTION
RMTH	MOTOR HIGH TEMPERATURE ALARM RELAY
RPLM	PLC PUMP RUN RELAY
RRST	PUMP RESET AUX RELAY
RPLC	PLC MODE AUX RELAY
RMOR	MOTOR OVERLOAD ALARM RELAY
RBRM	BACKUP SYSTEM RUN RELAY
RUV	UNDER VOLTAGE RELAY
ISO	INTRINSICALLY SAFE RELAY
RFS	PUMP RUN FLOAT SWITCH RELAY
TDFRM	TIMER FLOAT SWITCH RUN RELAY
RMSL	MOTOR SEAL LEAK ALARM RELAY
RFLP	FLOAT LOCKOUT PUMP RELAY

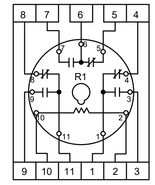

RELAY DETAIL
ITEM R

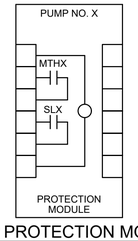

PUMP PROTECTION MODULE
DETAIL, ITEM XX

NOTE: REPLACE "X" WITH APPROPRIATE PUMP NO.

NOTES:

1. SEE SHEET RL-I-04 FOR EQUIPMENT SCHEDULE.

NO.	DATE	REVISION	APP.

NOTICE:
FOR YOUR SAFETY, YOU ARE REQUIRED BY TEXAS LAW TO CALL 811 AT LEAST 48 HOURS BEFORE YOU DIG SO THAT UNDERGROUND LINES CAN BE MARKED. THIS SIGNATURE DOES NOT FULFILL YOUR OBLIGATION TO CALL 811

VERIFICATION OF PRIVATE UTILITY LINES

Date

CenterPoint Energy natural gas utilities shown. (Gas service lines are not shown). This signature not be used for conflict verification.

Signature valid for six months.

Date

CenterPoint Energy/UNDERGROUND Electrical Facilities Verification ONLY. (This signature verifies existing underground facilities – not to be used for conflict verification)

Signature valid for six months.

Date

Approved for AT&T underground conduit facilities only.
Signature valid for one year.

PAPE–DAWSON
2107 CITYWEST BLVD, 3RD FLR I HOUSTON, TX 77042 I 713.428.2400
TEXAS ENGINEERING FIRM #470 I TEXAS SURVEYING FIRM #10028800

GAI
Gupta & Associates, Inc.
CONSULTING ENGINEERING
Registration No. F-2593
302 Dennis St.
Houston, Texas 77006
Tel: 713-636-2936
Fax: 713-636-2987
email: hforouzan@gaiconsulting.com

THIS DOCUMENT IS RELEASED FOR INTERIM REVIEW UNDER THE AUTHORIZATION OF HOSS FOROUZAN, P.E. (#77748) AND IS **NOT TO BE USED FOR CONSTRUCTION.**

SURVEYED BY:
PAPE–DAWSON ENGINEERS
FB NO. 24–018

CITY OF HOUSTON
HOUSTON PUBLIC WORKS

LIFT STATION REHABILITATION AND RECONSTRUCTION
BEN'S BRANCH, WOODLAND RIDGE, ELMWOOD HILLS, FOREST SHORES, TRAIL RIVER, RIVERLAWN

INSTRUMENTATION

RIVERLAWN LIFT STATION CONTROL CABINET EQUIPMENT LAYOUT–II

WBS NUMBER	FOR CITY OF HOUSTON USE ONLY
R–000267–0180–3	
DRAWING SCALE	
AS NOTED	
CITY OF HOUSTON PM	
BRENDA JOHNSON P.E.	
SHEET NO. XX OF XX	

RL–I–06

FILE PATH: O:\H8107_Lift Station Rehabilitation And Reconstruction (Pape Dawson)\6 Drawings\Instrumentation And Control\Working\River Lawn\H8107_RL–I–06.dwg

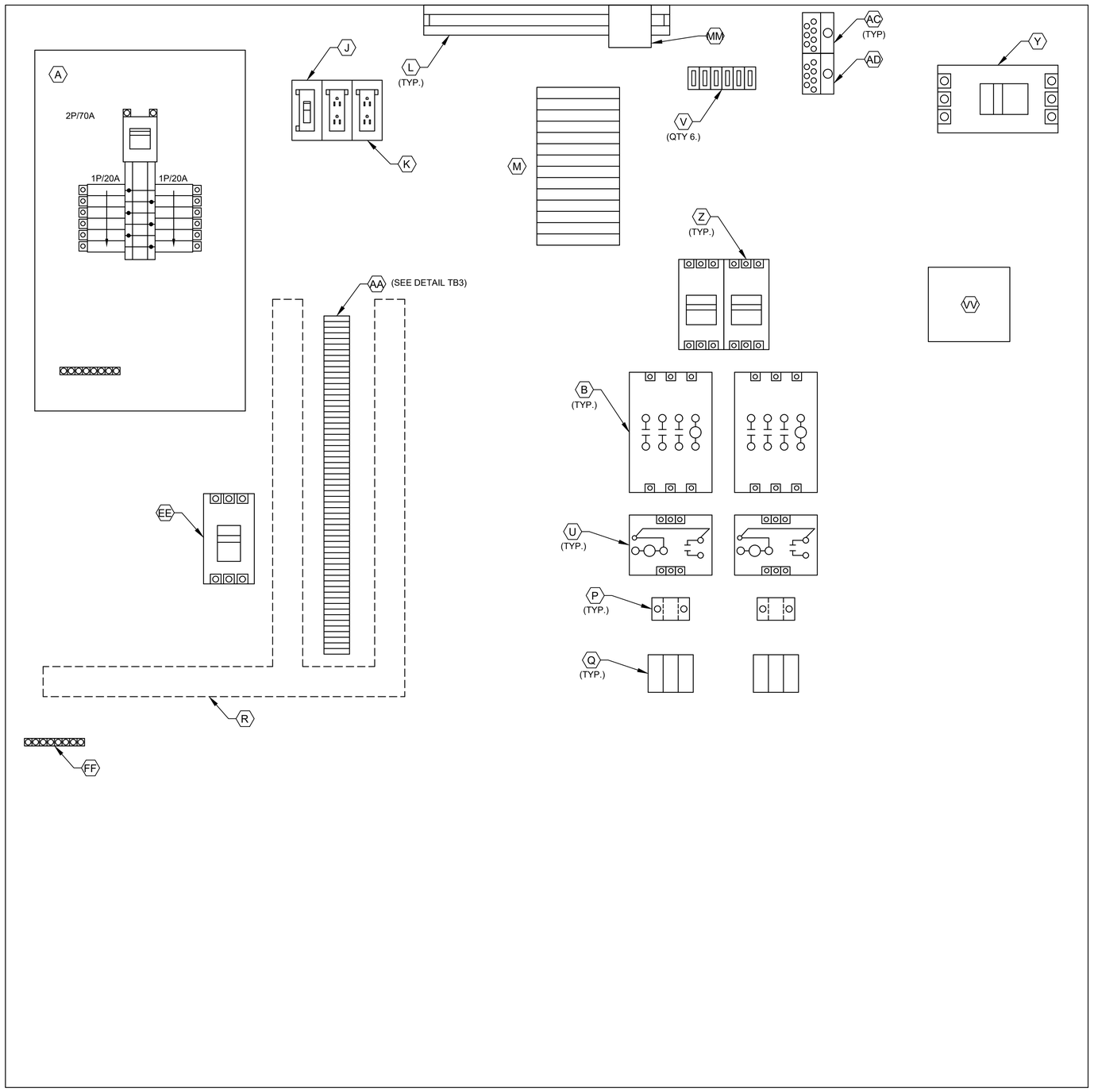

POWER PANEL
ELEVATION

3
18
L1A
L1N
SPARE
SPARE
103
104
105
106
107
108
110
113
115
116
119
SPARE
203
204
205
206
207
208
210
213
215
216
219
SPARE
SPARE
SPARE
SPARE
SPARE
SPARE
SPARE
SPARE
SPARE
SPARE

DETAIL TB3

NOTES:

1. SEE SHEET RL-I-04 FOR EQUIPMENT SCHEDULE.

NO.	DATE	REVISION	APP.

NOTICE:
FOR YOUR SAFETY, YOU ARE REQUIRED BY TEXAS LAW TO CALL 811 AT LEAST 48 HOURS BEFORE YOU DIG SO THAT UNDERGROUND LINES CAN BE MARKED. THIS SIGNATURE DOES NOT FULFILL YOUR OBLIGATION TO CALL 811

VERIFICATION OF PRIVATE UTILITY LINES

Date

CenterPoint Energy natural gas utilities shown. (Gas service lines are not shown). This signature not be used for conflict verification.

Signature valid for six months.

Date

CenterPoint Energy/UNDERGROUND Electrical Facilities Verification ONLY. (This signature verifies existing underground facilities – not to be used for conflict verification)

Signature valid for six months.

Date

Approved for AT&T underground conduit facilities only.
Signature valid for one year.

PAPE-DAWSON
2107 CITYWEST BLVD, 3RD FLR I HOUSTON, TX 77042 I 713.428.2400
TEXAS ENGINEERING FIRM #470 I TEXAS SURVEYING FIRM #10028800

GAI
Gupta & Associates, Inc.
CONSULTING ENGINEERING
Registration No. F-2593
302 Dennis St.
Houston, Texas 77006
Tel: 713-636-2936
Fax: 713-636-2987
email: hforouzan@gaiconsulting.com

SURVEYED BY:
PAPE-DAWSON ENGINEERS
FB NO. 24-018

THIS DOCUMENT IS RELEASED FOR INTERIM REVIEW UNDER THE AUTHORIZATION OF HOSS FOROUZAN, P.E. (#77748) AND IS **NOT TO BE USED FOR CONSTRUCTION.**

CITY OF HOUSTON
HOUSTON PUBLIC WORKS

LIFT STATION REHABILITATION AND RECONSTRUCTION
BEN'S BRANCH, WOODLAND RIDGE, ELMWOOD HILLS, FOREST SHORES, TRAIL RIVER, RIVERLAWN

INSTRUMENTATION

RIVERLAWN LIFT STATION CONTROL CABINET EQUIPMENT LAYOUT–III

WBS NUMBER	FOR CITY OF HOUSTON USE ONLY
R-000267-0180-3	
DRAWING SCALE	
AS NOTED	
CITY OF HOUSTON PM	
BRENDA JOHNSON P.E.	
SHEET NO. XX OF XX	

RL-I-07

FILE PATH: O:\H8107_Lift Station Rehabilitation And Reconstruction (Pape Dawson)\6 Drawings\Instrumentation And Control\Working\River Lawn\H8107_RL-I-07.dwg

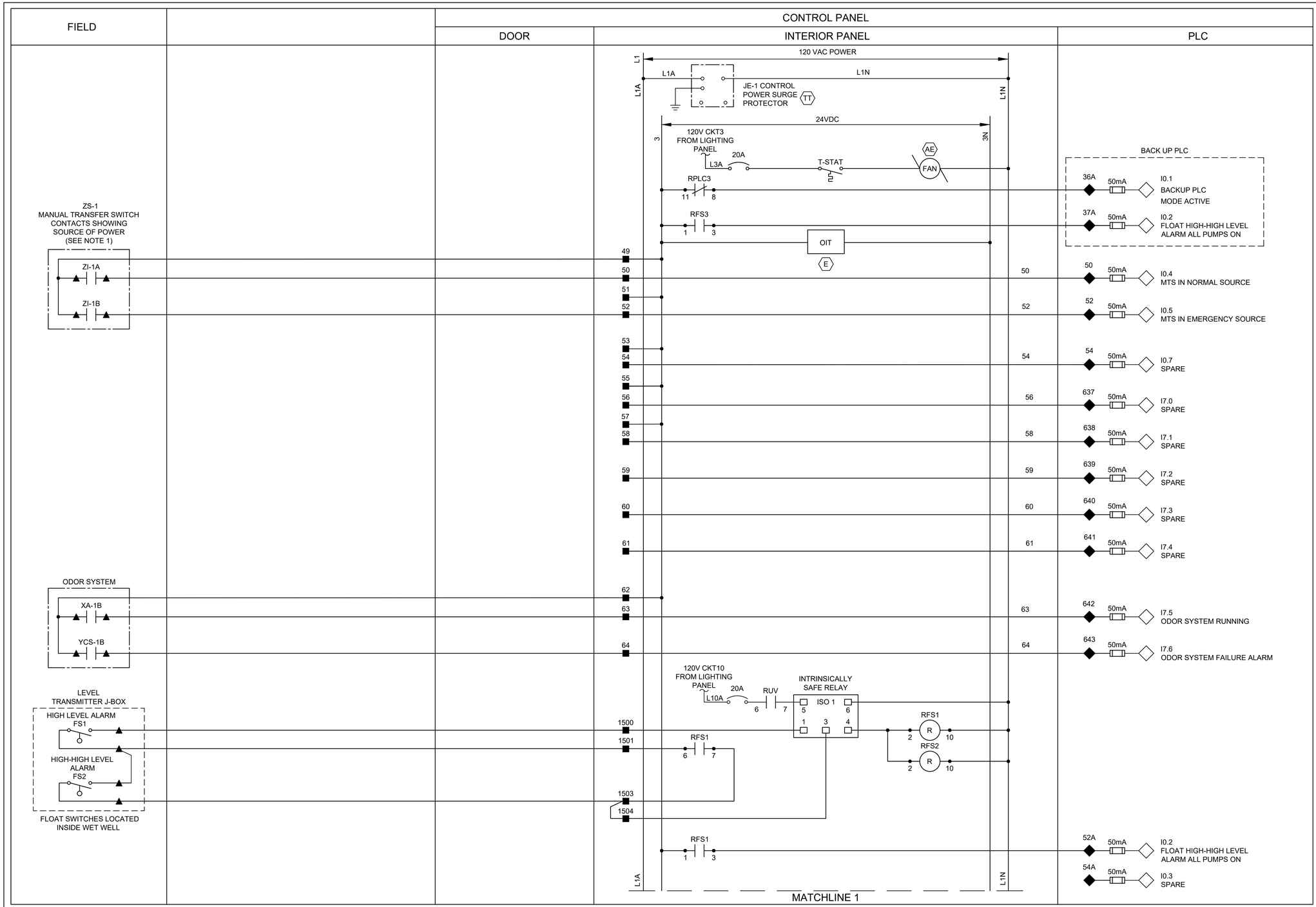

LEGEND

- △ DEVICE OR FIELD TERMINAL LOCATED AT MOTOR
- ✳ DEVICE OR FIELD TERMINAL LOCATED REMOTE
- □ DEVICE OR FIELD TERMINAL LOCATED AT MCC/POWER PANEL
- ■ FIELD TERMINAL LOCATED AT CONTROL PANEL
- ▲ REMOTE TERMINAL
- ● DEVICE TERMINAL NO.
- ◆ PLC INTERFACE TERMINAL

NO.	DATE	REVISION	APP.

NOTES:

1. PROVIDE AUTO TRANSFER SWITCH DRY CONTACT.
2. ALL FLOAT CONTROL CIRCUIT WIRES COLOR SHALL BE YELLOW.

NOTICE:
FOR YOUR SAFETY, YOU ARE REQUIRED BY TEXAS LAW TO CALL 811 AT LEAST 48 HOURS BEFORE YOU DIG SO THAT UNDERGROUND LINES CAN BE MARKED. THIS SIGNATURE DOES NOT FULFILL YOUR OBLIGATION TO CALL 811

VERIFICATION OF PRIVATE UTILITY LINES

Date

CenterPoint Energy natural gas utilities shown. (Gas service lines are not shown). This signature not be used for conflict verification.

Signature valid for six months.

Date

CenterPoint Energy/UNDERGROUND Electrical Facilities Verification ONLY. (This signature verifies existing underground facilities – not to be used for conflict verification)

Signature valid for six months.

Date

Approved for AT&T underground conduit facilities only.
Signature valid for one year.

PAPE–DAWSON
2107 CITYWEST BLVD, 3RD FLR I HOUSTON, TX 77042 I 713.428.2400
TEXAS ENGINEERING FIRM #470 I TEXAS SURVEYING FIRM #10028800

GAI
Gupta & Associates, Inc.
CONSULTING ENGINEERING
Registration No. F-2593
302 Dennis St.
Houston, Texas 77006
Tel: 713-636-2936
Fax: 713-636-2987
email: hforouzan@guiconsulting.com

SURVEYED BY:
PAPE–DAWSON ENGINEERS
FB NO. 24–018

THIS DOCUMENT IS RELEASED FOR INTERIM REVIEW UNDER THE AUTHORIZATION OF HOSS FOROUZAN, P.E. (#77748) AND IS **NOT TO BE USED FOR CONSTRUCTION.**

CITY OF HOUSTON
HOUSTON PUBLIC WORKS

LIFT STATION REHABILITATION AND RECONSTRUCTION
BEN'S BRANCH, WOODLAND RIDGE, ELMWOOD HILLS, FOREST SHORES, TRAIL RIVER, RIVERLAWN

INSTRUMENTATION

RIVERLAWN LIFT STATION CONTROL PANEL CONTROL WIRING DIAGRAM–I

WBS NUMBER	FOR CITY OF HOUSTON USE ONLY
R–000267–0180–3	
DRAWING SCALE	
AS NOTED	
CITY OF HOUSTON PM	
BRENDA JOHNSON P.E.	
SHEET NO. XX OF XX	

RL–I–08

FILE PATH: O:\H8107_Lift Station Rehabilitation And Reconstruction (Pape Dawson)\6 Drawings\Instrumentation And Control\Working\River Lawn\H8107_RL–I–08.dwg

FILE PATH: O:\H8107_Lift Station Rehabilitation And Reconstruction (Pape Dawson)\6 Drawings\Instrumentation And Control\Working\River Lawn\H8107_RL-I-09.dwg

FIELD		CONTROL PANEL	
		DOOR	INTERIOR PANEL

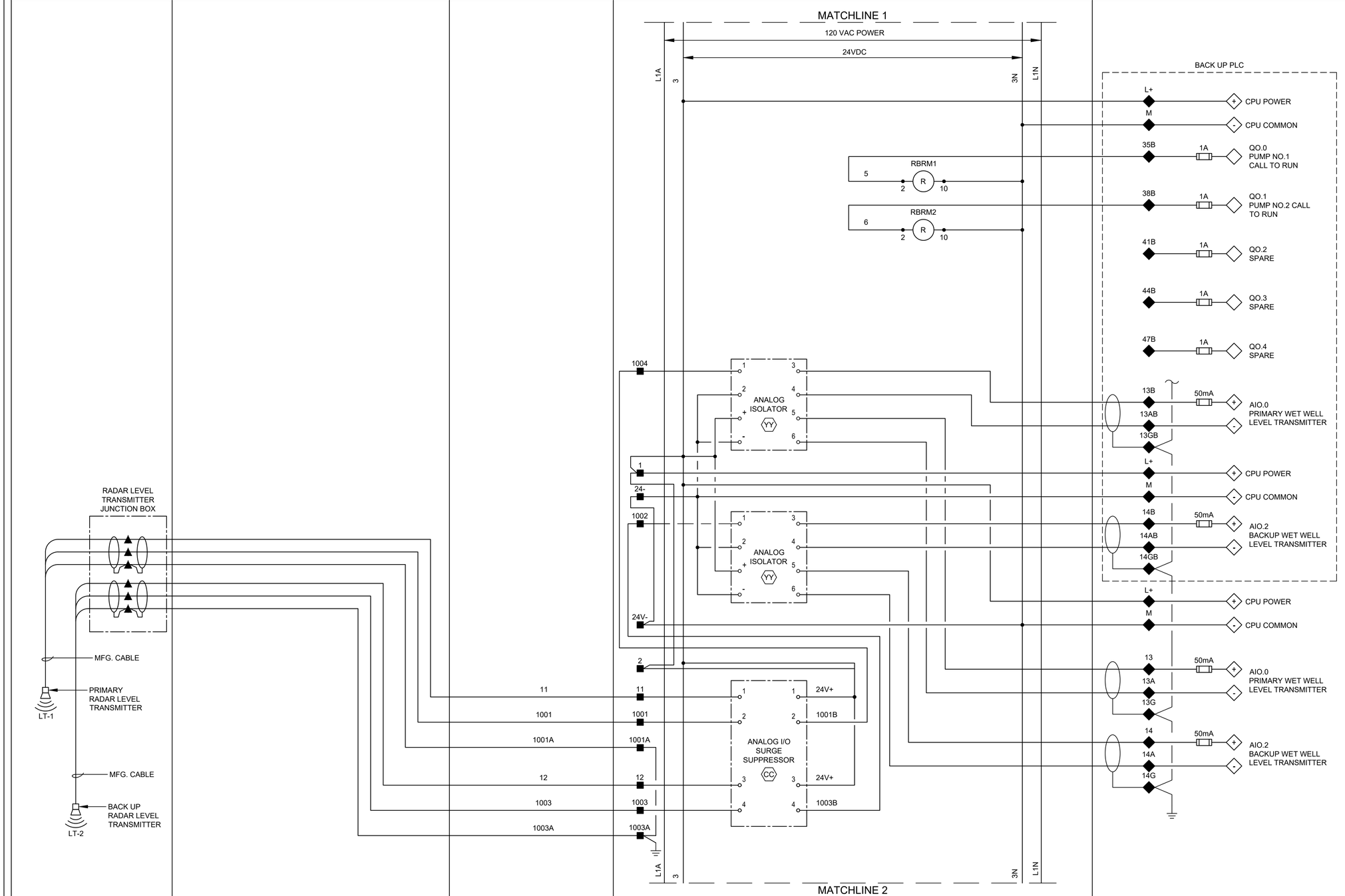

LEGEND

- △ DEVICE OR FIELD TERMINAL LOCATED AT MOTOR
- ✳ DEVICE OR FIELD TERMINAL LOCATED REMOTE
- □ DEVICE OR FIELD TERMINAL LOCATED AT MCC/POWER PANEL
- ■ FIELD TERMINAL LOCATED AT CONTROL PANEL
- ▲ REMOTE TERMINAL
- ● DEVICE TERMINAL NO.
- ◆ PLC INTERFACE TERMINAL

NO.	DATE	REVISION	APP.

NOTICE:
FOR YOUR SAFETY, YOU ARE REQUIRED BY TEXAS LAW TO CALL 811 AT LEAST 48 HOURS BEFORE YOU DIG SO THAT UNDERGROUND LINES CAN BE MARKED. THIS SIGNATURE DOES NOT FULFILL YOUR OBLIGATION TO CALL 811

VERIFICATION OF PRIVATE UTILITY LINES

Date

CenterPoint Energy natural gas utilities shown. (Gas service lines are not shown). This signature not be used for conflict verification.

Signature valid for six months.

Date

CenterPoint Energy/UNDERGROUND Electrical Facilities Verification ONLY. (This signature verifies existing underground facilities – not to be used for conflict verification)

Signature valid for six months.

Date

Approved for AT&T underground conduit facilities only.
Signature valid for one year.

PAPE–DAWSON
2107 CITYWEST BLVD, 3RD FLR I HOUSTON, TX 77042 I 713.428.2400
TEXAS ENGINEERING FIRM #470 I TEXAS SURVEYING FIRM #10028800

GAI
Gupta & Associates, Inc.
CONSULTING ENGINEERING
Registration No. F-2593
302 Dennis St.
Houston, Texas 77006
Tel: 713-636-2936
Fax: 713-636-2987
email: hforouzan@guiconsulting.com

SURVEYED BY:
PAPE–DAWSON ENGINEERS
FB NO. 24–018

THIS DOCUMENT IS RELEASED FOR INTERIM REVIEW UNDER THE AUTHORIZATION OF HOSS FOROUZAN, P.E. (#77748) AND IS **NOT TO BE USED FOR CONSTRUCTION.**

CITY OF HOUSTON
HOUSTON PUBLIC WORKS

LIFT STATION REHABILITATION AND RECONSTRUCTION
BEN'S BRANCH, WOODLAND RIDGE, ELMWOOD HILLS, FOREST SHORES, TRAIL RIVER, RIVERLAWN

INSTRUMENTATION

RIVERLAWN LIFT STATION CONTROL PANEL CONTROL WIRING DIAGRAM–II

WBS NUMBER	FOR CITY OF HOUSTON USE ONLY
R–000267–0180–3	
DRAWING SCALE	
AS NOTED	
CITY OF HOUSTON PM	
BRENDA JOHNSON P.E.	
SHEET NO. XX OF XX	

RL–I–09

FIELD | POWER PANEL | CONTROL PANEL: DOOR | CONTROL PANEL: INTERIOR PANEL | CONTROL PANEL: PLC

MATCHLINE 2

120 VAC POWER

24VDC

L1A 3 3N L1N

L1

N

MS

MOTION SWITCH

L1

N

MS

MOTION SWITCH

17 50mA I0.0 INTRUSION ALARM

BACK UP PLC

RUV 11 9

18B 50mA I0.0 PHASE FAILURE UNDER VOLTAGE

18 18 18 50mA I0.1 PHASE FAILURE UNDER VOLTAGE

RUV 2 R 10

ØA ØB ØC

JE-2 PHASE MONITOR

7 8 9 10 11 12

N/C 3

M1

19

20

RFLP 2 R 10

CHEMICAL RADAR LEVEL TRANSMITTER JUNCTION BOX

13 13

1004 1004

1004A 1004A

MFG. CABLE

CHEMICAL THANK RADAR LEVEL TRANSMITTER

LT-3

ANALOG I/O SURGE SUPPRESSOR

1 24V+

2 1004B

3 24V+

4

15 50mA AI0.4 CHEMICAL TANK LEVEL TRANSMITTER

15A

15G

16 50mA AI0.6 SPARE

16A

16G

L1A 3 3N L1N

MATCHLINE 3

LEGEND

△ DEVICE OR FIELD TERMINAL LOCATED AT MOTOR

✳ DEVICE OR FIELD TERMINAL LOCATED REMOTE

□ DEVICE OR FIELD TERMINAL LOCATED AT MCC/POWER PANEL

■ FIELD TERMINAL LOCATED AT CONTROL PANEL

▲ REMOTE TERMINAL

● DEVICE TERMINAL NO.

◆ PLC INTERFACE TERMINAL

NO.	DATE	REVISION	APP.

NOTES:

1. PROVIDE ONE LIMIT SWITCH PER EXTERIOR CONTROL PANEL AND POWER PANEL DOOR, WIRED IN PARALLEL.

NOTICE:
FOR YOUR SAFETY, YOU ARE REQUIRED BY TEXAS LAW TO CALL 811 AT LEAST 48 HOURS BEFORE YOU DIG SO THAT UNDERGROUND LINES CAN BE MARKED. THIS SIGNATURE DOES NOT FULFILL YOUR OBLIGATION TO CALL 811

VERIFICATION OF PRIVATE UTILITY LINES

Date

CenterPoint Energy natural gas utilities shown. (Gas service lines are not shown). This signature not be used for conflict verification.

Signature valid for six months.

Date

CenterPoint Energy/UNDERGROUND Electrical Facilities Verification ONLY. (This signature verifies existing underground facilities – not to be used for conflict verification)

Signature valid for six months.

Date

Approved for AT&T underground conduit facilities only.
Signature valid for one year.

PAPE-DAWSON
2107 CITYWEST BLVD, 3RD FLR I HOUSTON, TX 77042 I 713.428.2400
TEXAS ENGINEERING FIRM #470 I TEXAS SURVEYING FIRM #10028800

GAI
Gupta & Associates, Inc.
CONSULTING ENGINEERING
Registration No. F-2593
302 Dennis St.
Houston, Texas 77006
Tel: 713-636-2936
Fax: 713-636-2987
email: hforouzan@gaiconsulting.com

SURVEYED BY:
PAPE-DAWSON ENGINEERS
FB NO. 24-018

THIS DOCUMENT IS RELEASED FOR INTERIM REVIEW UNDER THE AUTHORIZATION OF HOSS FOROUZAN, P.E. (#77748) AND IS **NOT TO BE USED FOR CONSTRUCTION.**

CITY OF HOUSTON
HOUSTON PUBLIC WORKS

LIFT STATION REHABILITATION AND RECONSTRUCTION
BEN'S BRANCH, WOODLAND RIDGE, ELMWOOD HILLS, FOREST SHORES, TRAIL RIVER, RIVERLAWN

INSTRUMENTATION

RIVERLAWN LIFT STATION CONTROL PANEL CONTROL WIRING DIAGRAM–III

WBS NUMBER	FOR CITY OF HOUSTON USE ONLY
R-000267-0180-3	
DRAWING SCALE	
AS NOTED	
CITY OF HOUSTON PM	
BRENDA JOHNSON P.E.	
SHEET NO. XX OF XX	

RL-I-10

FILE PATH: O:\H8107_Lift Station Rehabilitation And Reconstruction (Pape Dawson)\6 Drawings\Instrumentation And Control\Working\River Lawn\H8107_RL-I-10.dwg

FIELD	POWER PANEL	CONTROL PANEL	
		DOOR	INTERIOR PANEL

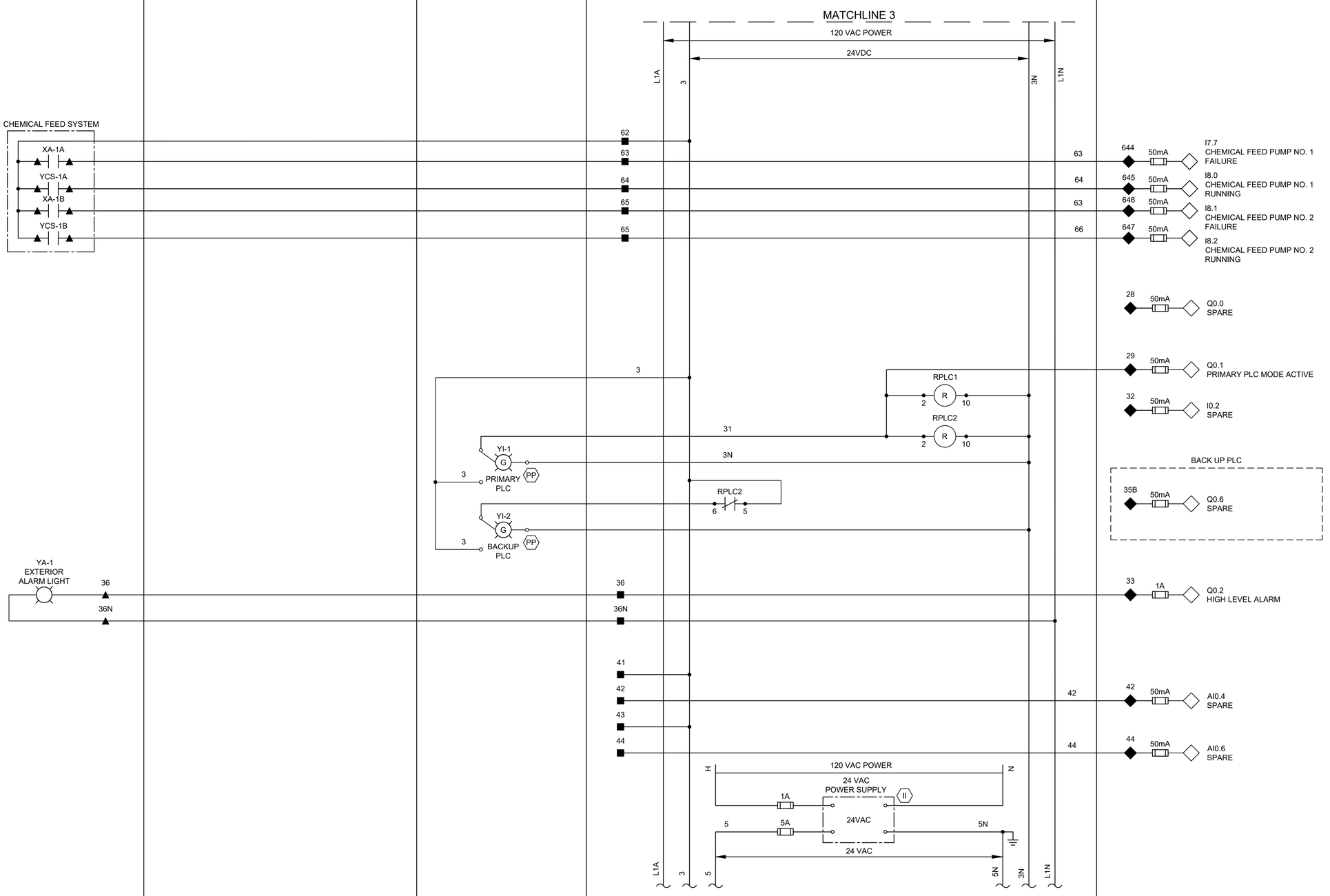

LEGEND

- △ DEVICE OR FIELD TERMINAL LOCATED AT MOTOR
- ✳ DEVICE OR FIELD TERMINAL LOCATED REMOTE
- □ DEVICE OR FIELD TERMINAL LOCATED AT MCC/POWER PANEL
- ■ FIELD TERMINAL LOCATED AT CONTROL PANEL
- ▲ REMOTE TERMINAL
- ● DEVICE TERMINAL NO.
- ◆ PLC INTERFACE TERMINAL

NO.	DATE	REVISION	APP.

NOTICE:
FOR YOUR SAFETY, YOU ARE REQUIRED BY TEXAS LAW TO CALL 811 AT LEAST 48 HOURS BEFORE YOU DIG SO THAT UNDERGROUND LINES CAN BE MARKED. THIS SIGNATURE DOES NOT FULFILL YOUR OBLIGATION TO CALL 811

VERIFICATION OF PRIVATE UTILITY LINES

Date

CenterPoint Energy natural gas utilities shown. (Gas service lines are not shown). This signature not be used for conflict verification.

Signature valid for six months.

Date

CenterPoint Energy/UNDERGROUND Electrical Facilities Verification ONLY. (This signature verifies existing underground facilities – not to be used for conflict verification)

Signature valid for six months.

Date

Approved for AT&T underground conduit facilities only.
Signature valid for one year.

PAPE–DAWSON
2107 CITYWEST BLVD, 3RD FLR I HOUSTON, TX 77042 I 713.428.2400
TEXAS ENGINEERING FIRM #470 I TEXAS SURVEYING FIRM #10028800

GAI
Gupta & Associates, Inc.
CONSULTING ENGINEERING
Registration No. F-2593
302 Dennis St.
Houston, Texas 77006
Tel: 713-636-2936
Fax: 713-636-2987
email: hforouzan@gaiconsulting.com

SURVEYED BY:
PAPE–DAWSON ENGINEERS
FB NO. 24–018

THIS DOCUMENT IS RELEASED FOR INTERIM REVIEW UNDER THE AUTHORIZATION OF HOSS FOROUZAN, P.E. (#77748) AND IS **NOT TO BE USED FOR CONSTRUCTION.**

CITY OF HOUSTON
HOUSTON PUBLIC WORKS

LIFT STATION REHABILITATION AND RECONSTRUCTION
BEN'S BRANCH, WOODLAND RIDGE, ELMWOOD HILLS, FOREST SHORES, TRAIL RIVER, RIVERLAWN

INSTRUMENTATION

RIVERLAWN LIFT STATION CONTROL PANEL CONTROL WIRING DIAGRAM–IV

WBS NUMBER	FOR CITY OF HOUSTON USE ONLY
R–000267–0180–3	
DRAWING SCALE	
AS NOTED	
CITY OF HOUSTON PM	
BRENDA JOHNSON P.E.	
SHEET NO. XX OF XX	

RL–I–11

FILE PATH: O:\H8107_Lift Station Rehabilitation And Reconstruction (Pape Dawson)\6 Drawings\Instrumentation And Control\Working\River Lawn\H8107_RL–I–11.dwg

FILE PATH: O:\H8107_Lift Station Rehabilitation And Reconstruction (Pape Dawson)\6 Drawings\Instrumentation And Control\Working\River Lawn\H8107_RL-I-12.dwg

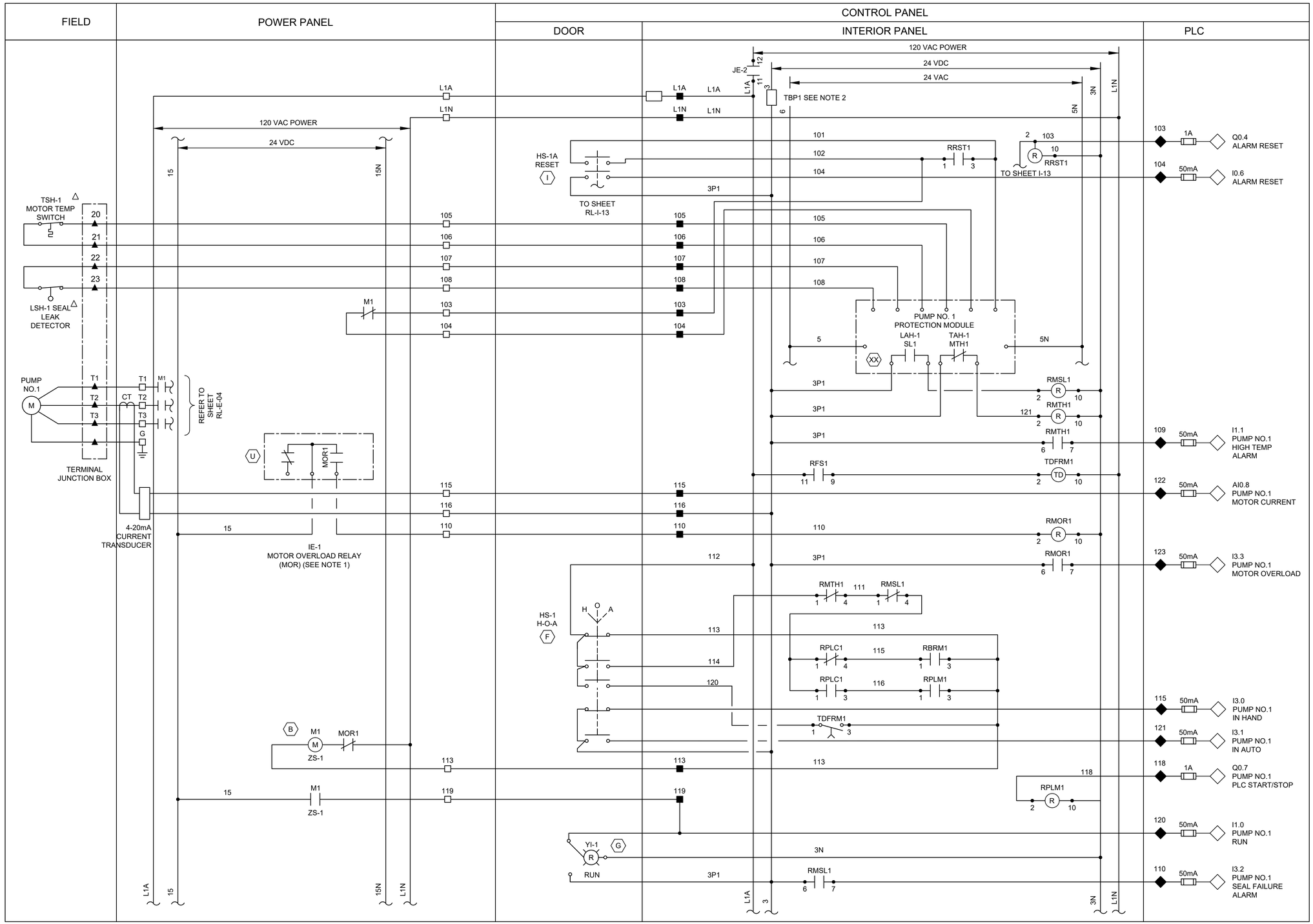

LEGEND

- △ DEVICE OR FIELD TERMINAL LOCATED AT MOTOR
- ✳ DEVICE OR FIELD TERMINAL LOCATED REMOTE
- □ DEVICE OR FIELD TERMINAL LOCATED AT MCC/POWER PANEL
- ■ FIELD TERMINAL LOCATED AT CONTROL PANEL
- ▲ REMOTE TERMINAL
- ● DEVICE TERMINAL NO.
- ◆ PLC INTERFACE TERMINAL

NO.	DATE	REVISION	APP.

NOTES:

1. MOTOR OVERLOAD RELAY OUTPUT CONTACT SHOWN IS NORMALLY CLOSED WHEN RELAY IS DE-ENERGIZED, OPEN WHEN ENERGIZED, AND CLOSED WHEN IN ALARM. VERIFY OPERATION OF RELAY PROVIDED AND ADJUST CONNECTION OF RMOR AUXILIARY RELAYS.
2. FUSED TERMINAL ON TERMINAL BLOCK TB4 SEE CONTROL POWER AND COMMUNICATION WIRING DIAGRAM DRAWING NO. RL-I-03.
3. ALL FLOAT CONTROL CIRCUIT WIRES COLOR SHALL BE YELLOW.

NOTICE:
FOR YOUR SAFETY, YOU ARE REQUIRED BY TEXAS LAW TO CALL 811 AT LEAST 48 HOURS BEFORE YOU DIG SO THAT UNDERGROUND LINES CAN BE MARKED. THIS SIGNATURE DOES NOT FULFILL YOUR OBLIGATION TO CALL 811

VERIFICATION OF PRIVATE UTILITY LINES

Date

CenterPoint Energy natural gas utilities shown. (Gas service lines are not shown). This signature not be used for conflict verification.

Signature valid for six months.

Date

CenterPoint Energy/UNDERGROUND Electrical Facilities Verification ONLY. (This signature verifies existing underground facilities – not to be used for conflict verification)

Signature valid for six months.

Date

Approved for AT&T underground conduit facilities only.
Signature valid for one year.

PAPE–DAWSON
2107 CITYWEST BLVD, 3RD FLR I HOUSTON, TX 77042 I 713.428.2400
TEXAS ENGINEERING FIRM #470 I TEXAS SURVEYING FIRM #10028800

GAI
Gupta & Associates, Inc.
CONSULTING ENGINEERING
Registration No. F-2593
302 Dennis St.
Houston, Texas 77006
Tel: 713-636-2936
Fax: 713-636-2987
email: hforouzan@gaiconsulting.com

SURVEYED BY:
PAPE–DAWSON ENGINEERS
FB NO. 24–018

THIS DOCUMENT IS RELEASED FOR INTERIM REVIEW UNDER THE AUTHORIZATION OF HOSS FOROUZAN, P.E. (#77748) AND IS **NOT TO BE USED FOR CONSTRUCTION.**

CITY OF HOUSTON
HOUSTON PUBLIC WORKS

LIFT STATION REHABILITATION AND RECONSTRUCTION
BEN'S BRANCH, WOODLAND RIDGE, ELMWOOD HILLS, FOREST SHORES, TRAIL RIVER, RIVERLAWN

INSTRUMENTATION

RIVERLAWN LIFT STATION PUMP NO.1 CONTROL WIRING DIAGRAM

WBS NUMBER	FOR CITY OF HOUSTON USE ONLY
R–000267–0180–3	
DRAWING SCALE	
AS NOTED	
CITY OF HOUSTON PM	
BRENDA JOHNSON P.E.	
SHEET NO. XX OF XX	

RL–I–12

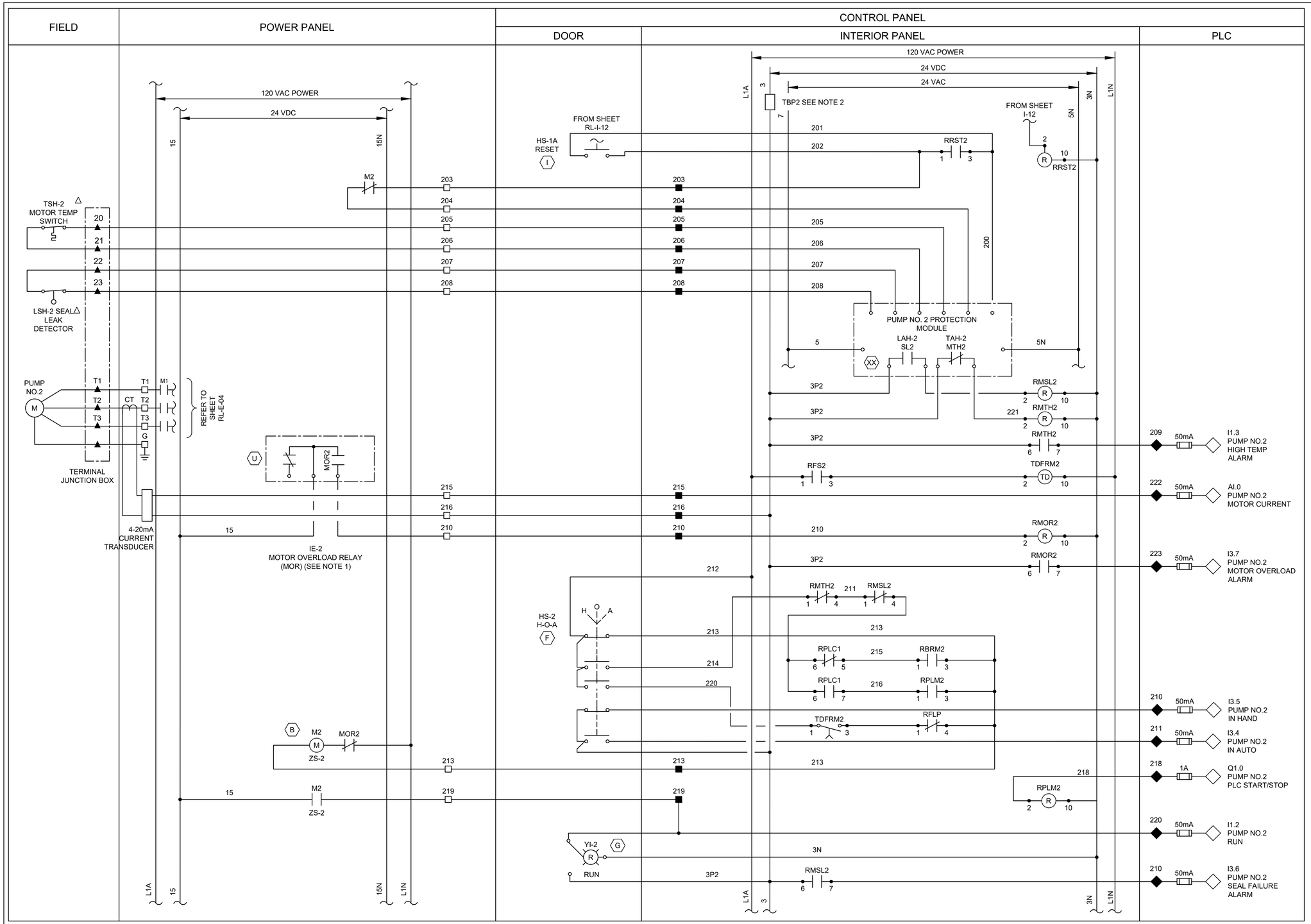

LEGEND

- △ DEVICE OR FIELD TERMINAL LOCATED AT MOTOR
- ✳ DEVICE OR FIELD TERMINAL LOCATED REMOTE
- □ DEVICE OR FIELD TERMINAL LOCATED AT MCC/POWER PANEL
- ■ FIELD TERMINAL LOCATED AT CONTROL PANEL
- ▲ REMOTE TERMINAL
- ● DEVICE TERMINAL NO.
- ◆ PLC INTERFACE TERMINAL

NOTES:

1. MOTOR OVERLOAD RELAY OUTPUT CONTACT SHOWN IS NORMALLY CLOSED WHEN RELAY IS DE-ENERGIZED, OPEN WHEN ENERGIZED, AND CLOSED WHEN IN ALARM. VERIFY OPERATION OF RELAY PROVIDED AND ADJUST CONNECTION OF RMOR AUXILIARY RELAYS.
2. FUSED TERMINAL ON TERMINAL BLOCK TB4 SEE CONTROL POWER AND COMMUNICATION WIRING DIAGRAM DRAWING NO. RL-I-03.
3. ALL FLOAT CONTROL CIRCUIT WIRES COLOR SHALL BE YELLOW.

NOTICE:
FOR YOUR SAFETY, YOU ARE REQUIRED BY TEXAS LAW TO CALL 811 AT LEAST 48 HOURS BEFORE YOU DIG SO THAT UNDERGROUND LINES CAN BE MARKED. THIS SIGNATURE DOES NOT FULFILL YOUR OBLIGATION TO CALL 811

VERIFICATION OF PRIVATE UTILITY LINES

Date

CenterPoint Energy natural gas utilities shown. (Gas service lines are not shown). This signature not be used for conflict verification.

Signature valid for six months.

Date

CenterPoint Energy/UNDERGROUND Electrical Facilities Verification ONLY. (This signature verifies existing underground facilities – not to be used for conflict verification)

Signature valid for six months.

Date

Approved for AT&T underground conduit facilities only. Signature valid for one year.

PAPE–DAWSON
2107 CITYWEST BLVD, 3RD FLR I HOUSTON, TX 77042 I 713.428.2400
TEXAS ENGINEERING FIRM #470 I TEXAS SURVEYING FIRM #10028800

GAI
Gupta & Associates, Inc.
CONSULTING ENGINEERING
Registration No. F-2593
302 Dennis St.
Houston, Texas 77006
Tel: 713-636-2936
Fax: 713-636-2987
email: hforouzan@gaiconsulting.com

THIS DOCUMENT IS RELEASED FOR INTERIM REVIEW UNDER THE AUTHORIZATION OF HOSS FOROUZAN, P.E. (#77748) AND IS **NOT TO BE USED FOR CONSTRUCTION.**

SURVEYED BY:
PAPE–DAWSON ENGINEERS
FB NO. 24–018

CITY OF HOUSTON
HOUSTON PUBLIC WORKS

LIFT STATION REHABILITATION AND RECONSTRUCTION
BEN'S BRANCH, WOODLAND RIDGE, ELMWOOD HILLS, FOREST SHORES, TRAIL RIVER, RIVERLAWN

INSTRUMENTATION

RIVERLAWN LIFT STATION PUMP NO.2 CONTROL WIRING DIAGRAM

WBS NUMBER	FOR CITY OF HOUSTON USE ONLY
R–000267–0180–3	
DRAWING SCALE	
AS NOTED	
CITY OF HOUSTON PM	
BRENDA JOHNSON P.E.	
SHEET NO. XX OF XX	

RL–I–13

NO.	DATE	REVISION	APP.

FILE PATH: O:\H8107_Lift Station Rehabilitation And Reconstruction (Pape Dawson)\6 Drawings\Instrumentation And Control\Working\River Lawn\H8107_RL–I–13.dwg